1–28–99
Vol. 64 No. 18
Pages 4285–4516

federal register

Thursday
January 28, 1999

Now Available Online via

GPO Access

Free online access to the official editions of the *Federal Register, the Code of Federal Regulations* and other Federal Register publications is available on *GPO Access*, a service of the U.S. Government Printing Office at:

http://www.access.gpo.gov/nara/index.html

For additional information on ***GPO Access*** products, services and access methods, see page II or contact the *GPO Access* User Support Team via:

★ Phone: toll-free: 1-888-293-6498

★ Email: gpoaccess@gpo.gov

Attention: Federal Agencies

Plain Language Tools Are Now Available

The Office of the Federal Register offers Plain Language Tools on its Website to help you comply with the President's Memorandum of June 1, 1998—Plain Language in Government Writing (63 FR 31883, June 10, 1998). Our address is: http://www.nara.gov/fedreg

For more in-depth guidance on the elements of plain language, read ''Writing User-Friendly Documents'' on the National Partnership for Reinventing Government (NPR) Website at: http://www.plainlanguage.gov

The **FEDERAL REGISTER** is published daily, Monday through Friday, except official holidays, by the Office of the Federal Register, National Archives and Records Administration, Washington, DC 20408, under the Federal Register Act (44 U.S.C. Ch. 15) and the regulations of the Administrative Committee of the Federal Register (1 CFR Ch. I). The Superintendent of Documents, U.S. Government Printing Office, Washington, DC 20402 is the exclusive distributor of the official edition.

The **Federal Register** provides a uniform system for making available to the public regulations and legal notices issued by Federal agencies. These include Presidential proclamations and Executive Orders, Federal agency documents having general applicability and legal effect, documents required to be published by act of Congress, and other Federal agency documents of public interest.

Documents are on file for public inspection in the Office of the Federal Register the day before they are published, unless the issuing agency requests earlier filing. For a list of documents currently on file for public inspection, see http://www.nara.gov/fedreg.

The seal of the National Archives and Records Administration authenticates the Federal Register as the official serial publication established under the Federal Register Act. Under 44 U.S.C. 1507, the contents of the **Federal Register** shall be judicially noticed.

The **Federal Register** is published in paper and on 24x microfiche. It is also available online at no charge as one of the databases on GPO Access, a service of the U.S. Government Printing Office.

The online edition of the **Federal Register** is issued under the authority of the Administrative Committee of the Federal Register as the official legal equivalent of the paper and microfiche editions (44 U.S.C. 4101 and 1 CFR 5.10). It is updated by 6 a.m. each day the **Federal Register** is published and it includes both text and graphics from Volume 59, Number 1 (January 2, 1994) forward.

GPO Access users can choose to retrieve online **Federal Register** documents as TEXT (ASCII text, graphics omitted), PDF (Adobe Portable Document Format, including full text and all graphics), or SUMMARY (abbreviated text) files. Users should carefully check retrieved material to ensure that documents were properly downloaded.

On the World Wide Web, connect to the **Federal Register** at http://www.access.gpo.gov/nara. Those without World Wide Web access can also connect with a local WAIS client, by Telnet to swais.access.gpo.gov, or by dialing (202) 512-1661 with a computer and modem. When using Telnet or modem, type swais, then log in as guest with no password.

For more information about GPO Access, contact the GPO Access User Support Team by E-mail at gpoaccess@gpo.gov; by fax at (202) 512–1262; or call (202) 512–1530 or 1–888–293–6498 (toll free) between 7 a.m. and 5 p.m. Eastern time, Monday–Friday, except Federal holidays.

The annual subscription price for the **Federal Register** paper edition is $555, or $607 for a combined **Federal Register,** Federal Register Index and List of CFR Sections Affected (LSA) subscription; the microfiche edition of the **Federal Register** including the Federal Register Index and LSA is $220. Six month subscriptions are available for one-half the annual rate. The charge for individual copies in paper form is $8.00 for each issue, or $8.00 for each group of pages as actually bound; or $1.50 for each issue in microfiche form. All prices include regular domestic postage and handling. International customers please add 25% for foreign handling. Remit check or money order, made payable to the Superintendent of Documents, or charge to your GPO Deposit Account, VISA, MasterCard or Discover. Mail to: New Orders, Superintendent of Documents, P.O. Box 371954, Pittsburgh, PA 15250–7954.

There are no restrictions on the republication of material appearing in the **Federal Register.**

How To Cite This Publication: Use the volume number and the page number. Example: 64 FR 12345.

SUBSCRIPTIONS AND COPIES

PUBLIC	
Subscriptions:	
Paper or fiche	**202–512–1800**
Assistance with public subscriptions	**512–1806**
General online information	**202–512–1530; 1–888–293–6498**
Single copies/back copies:	
Paper or fiche	**512–1800**
Assistance with public single copies	**512–1803**
FEDERAL AGENCIES	
Subscriptions:	
Paper or fiche	**523–5243**
Assistance with Federal agency subscriptions	**523–5243**

NOW AVAILABLE ONLINE

The October 1998 Office of the Federal Register Document Drafting Handbook

Free, easy online access to the newly revised October 1998 Office of the Federal Register Document Drafting Handbook (DDH) is now available at:

http://www.nara.gov/fedreg/draftres.html

This handbook helps Federal agencies to prepare documents for publication in the **Federal Register.**

For additional information on access, contact the Office of the Federal Register's Technical Support Staff.

Phone: 202–523–3447

E-mail: info@fedreg.nara.gov

Printed on recycled paper.

Contents

Federal Register

Vol. 64, No. 18

Thursday, January 28, 1999

Administration on Aging
See Aging Administration

Agency for Toxic Substances and Disease Registry
NOTICES
Hazardous substances releases and facilities:
Public health assessments and effects; list, 4422–4423
Meetings:
Hanford Health Projects Inter-tribal Council et al., 4423
Public Health Service Activities and Research at DOE Sites Citizens Advisory Committee, 4423–4424

Aging Administration
NOTICES
Grants and cooperative agreements; availability, etc.:
Senior Medicare patrol projects, 4424

Agricultural Marketing Service
RULES
Olives grown in—
California, 4286–4288
PROPOSED RULES
Agricultural commodities:
Perishable Agricultural Commodities Act; rules of practice, 4342–4347
Olives grown in—
California, 4350–4352

Agriculture Department
See Agricultural Marketing Service
See Animal and Plant Health Inspection Service
See Forest Service

Animal and Plant Health Inspection Service
RULES
Plant-related quarantine, domestic:
Gypsy moth, 4285–4286
PROPOSED RULES
Animal welfare:
Rats and mice bred for use in research and birds; definition as animals; rulemaking petition, 4356–4367
Plant-related quarantine, foreign:
Cut flowers; importation, 4347–4350

Antitrust Division
NOTICES
National cooperative research notifications:
Asymmetrical Digital Subscriber Line Forum, 4469
Cable Television Laboratories, Inc., 4469–4470
Oil Industry Consortium for Nuclear Modeling Technology, 4470
PDES, Inc., 4470
Symbian Ltd., 4470
TeleManagement Forum, 4470–4471
Widegap Technology, LLC, 4471

Army Department
NOTICES
Environmental statements; notice of intent:
Base realignment and closure—
Fort Buchanan, PR, 4399
Fort Hunter Liggett, CA, 4399
Meetings:
Science Board, 4399–4400

Broadcasting Board of Governors
NOTICES
Meetings; Sunshine Act, 4396

Centers for Disease Control and Prevention
NOTICES
Meetings:
Guide to Community Preventive Services Task Force, 4424
Hanford Health Projects Inter-tribal Council et al., 4423
Occupational exposure to asphalt; health effects; NIOSH meeting, 4424–4425
Public Health Service Activities and Research at DOE Sites Citizens Advisory Committee, 4423–4424

Commerce Department
See Export Administration Bureau
See International Trade Administration
See National Oceanic and Atmospheric Administration

Congressional Budget Office
NOTICES
Balanced Budget and Emergency Deficit Control Reaffirmation Act (Gramm-Rudman-Hollings):
Sequestration preview report for 2000 FY; transmittal to Congress and OMB

Corporation for National and Community Service
RULES
Federal claims collection, 4315–4322

Defense Department
See Army Department
See Navy Department
NOTICES
Meetings:
Ballistic Missile Defense Advisory Committee, 4399

Education Department
NOTICES
Grants and cooperative agreements; availability, etc.:
Impact aid program, 4400
National Research Institutes' field-initiated studies program, 4401
Special education and rehabilitative services—
Traditionally underserved populations; capacity building, 4401–4402

Employment and Training Administration
NOTICES
Committees; establishment, renewal, termination, etc.:
Registered Apprenticeship Federal Committee, 4473

Energy Department
See Federal Energy Regulatory Commission

Environmental Protection Agency

RULES

Air pollutants, hazardous; national emission standards:
- Perchloroethylene emissions from dry cleaning facilities—
  - California, 4298–4301

Air quality implementation plans; approval and promulgation; various States:
- Texas, 4296–4298

Hazardous waste:
- Municipal solid waste landfills and non-municipal waste disposal units; State permit program adequacy determination; State implementation rule
  - Amendments and technical corrections, 4311–4315

Pesticides; tolerances in food, animal feeds, and raw agricultural commodities:
- Cryolite; partial withdrawal, 4308–4311
- Diflufenzopyr, 4301–4308

PROPOSED RULES

Air pollutants, hazardous; national emission standards:
- Perchloroethylene emissions from dry cleaning facilities—
  - California, 4379

Air quality implementation plans; approval and promulgation; various States:
- Texas, 4379

Hazardous waste:
- Municipal solid waste landfills and non-municipal waste disposal units; State permit program adequacy determination; State implementation rule
  - Amendments and technical corrections, 4379–4382

NOTICES

Confidential business information and data transfer, 4413

Meetings:
- Multi-agency radiation laboratory protocols manual development working group, 4413–4414
- National Environmental Justice Advisory Council, 4414

Pesticide registration, cancellation, etc.:
- AgrEvo USA Co., 4414–4418
- Monsanto Co., 4418–4419

Superfund; response and remedial actions, proposed settlements, etc.:
- C&R Battery Co., Inc. Site, VA, 4419–4420
- Moschiano Plating Co., Inc. Site, IL, 4420

Export Administration Bureau

NOTICES

Meetings:
- Regulations and Procedures Technical Advisory Committee, 4396–4397

Federal Aviation Administration

RULES

Airworthiness directives:
- Eurocopter France, 4288–4290
- McDonnell Douglas, 4291–4293
- Schempp-Hirth K.G., 4290–4291

PROPOSED RULES

Airworthiness directives:
- Boeing, 4372–4374 , 4367–4370
- Dornier, 4370–4372

NOTICES

Environmental statements; availability, etc.:
- John F. Kennedy International and LaGuardia Airports, NY; terminal Doppler weather radar, 4488

Federal Communications Commission

RULES

Television broadcasting:
- Advanced television (ATV) systems—
  - Digital television service; channel allotments; impact upon existing television service, 4322–4327

NOTICES

Agency information collection activities:
- Reporting and recordkeeping requirements, 4420–4421

Federal Election Commission

NOTICES

Meetings; Sunshine Act, 4421

Federal Energy Regulatory Commission

NOTICES

Agency information collection activities:
- Proposed collection; comment request, 4402–4403

Electric rate and corporate regulation filings:
- AES Westover, L.L.C., et al., 4405–4408

Environmental statements; availability, etc.:
- Summit Hydropower, Inc., 4408

Environmental statements; notice of intent:
- Northern Border Pipeline Co., 4408–4410
- Texas Eastern Transmission Corp., 4410–4411

Hydroelectric applications, 4411–4412

Hydroelectric applications; correction, 4493

National Register of Historic Places:
- Programmatic agreement for managing properties; restricted service list—
  - Summit Hydropower, 4413

Applications, hearings, determinations, etc.:
- Equitrans, L.P., 4403–4404
- Octonto Electric Cooperative, 4404
- Panhandle Eastern Pipe Line Co., 4404
- Peoples Gas Light & Coke Co., 4404
- TransColorado Gas Transmission Co., 4405
- Williams Gas Pipelines Central, Inc., 4405

Federal Highway Administration

NOTICES

Meetings:
- Ocular-based measures of driver alertness; conference, 4488–4490

Federal Maritime Commission

NOTICES

Agreements filed, etc., 4421

Freight forwarder licenses:
- First Unicorn International, 4421

Federal Reserve System

NOTICES

Banks and bank holding companies:
- Formations, acquisitions, and mergers, 4421–4422

Fish and Wildlife Service

RULES

Marine mammals:
- Incidental taking during specified activities—
  - Beaufort Sea, AK; year-round oil and gas industry operations; polar bears and Pacific walrus, 4328–4335

Food and Drug Administration

RULES

Animal drugs, feeds, and related products:
- Animal food definitions and standards; CFR part removed, 4293–4294

NOTICES
Human drugs:
Patent extension; regulatory review period determinations—
Prandin, 4425–4426
Medical devices:
Medical device inspection evaluation; pilot customer satisfaction survey, 4426–4431
Meetings:
Ephedrine and other substances; World Health Organization recommendations, 4432
Reports and guidance documents; availability, etc,:
Regulatory submissions in electronic format; general considerations, 4433–4434
Regulatory submissions in electronic format; new drug applications, 4432–4433
Therapeutic equivalence code placement on prescription drug labels and labeling, 4434–4435

Forest Service
NOTICES
Meetings:
Intergovernmental Advisory Committee, 4396

Geological Survey
NOTICES
Grant and cooperative agreement awards:
American Petroleum Institute, 4458
Pictometry International, LLC, 4458
Grants and cooperative agreements; availability, etc.:
National earthquake hazards reduction program, 4458

Health and Human Services Department
See Agency for Toxic Substances and Disease Registry
See Aging Administration
See Centers for Disease Control and Prevention
See Food and Drug Administration
See Health Care Financing Administration
See Inspector General Office, Health and Human Services Department
See National Institutes of Health

Health Care Financing Administration
See Inspector General Office, Health and Human Services Department
NOTICES
Agency information collection activities:
Submission for OMB review; comment request, 4435

Housing and Urban Development Department
NOTICES
Grants and cooperative agreements; availability, etc.:
Welfare-to-Work rental voucher program (Section 8)—
Tenant-based assistance (FY 1999), 4495–4504

Immigration and Naturalization Service
NOTICES
Agency information collection activities:
Submission for OMB review; comment request, 4471–4472

Indian Affairs Bureau
NOTICES
Tribal-State Compacts approval; Class III (casino) gambling:
Confederated Tribes of Chehalis Reservation, WA, 4458–4459
Jamestown S'Klallam, WA, 4459
Muckleshoot Indian Tribe, WA, 4459
Nooksack Indian Tribe, WA, 4459
Port Gamble S'Klallam Tribe, WA, 4459
Puyallup Tribe of Indians, WA, 4459–4460
Squaxin Island Tribe, WA, 4460
Suquamish Tribe, WA, 4460
Swinomish Indian Tribal Community, WA, 4460
Tulalip Tribes of Washington, WA, 4460
Upper Skagit Tribe, WA, 4460–4461
Yakama Indian Nation, WA, 4461

Inspector General Office, Health and Human Services Department
NOTICES
Reports and guidance documents; availability, etc.:
Durable medical equipment, prosthetics, orthotics, and supply industry; compliance program guidance, 4435–4454

Interior Department
See Fish and Wildlife Service
See Geological Survey
See Indian Affairs Bureau
See Land Management Bureau
See Minerals Management Service

Internal Revenue Service
PROPOSED RULES
Income taxes:
Mark-to-market accounting for dealers in commodities and traders in securities or commodities, 4374–4379

International Trade Administration
NOTICES
Grants and cooperative agreements; availability, etc.:
Special American business internship training program, 4397
North American Free Trade Agreement (NAFTA); binational panel reviews:
Circular welded non-alloy steel pipe and tube from—
Mexico, 4397
Corrosion-resistant carbon steel flat products from—
Canada, 4397–4398
Gray portland cement and clinker from—
Mexico, 4398
Overseas trade missions:
Multi-agency business development infrastructure mission to China and Hong Kong, etc.; correction, 4398

International Trade Commission
NOTICES
Agency information collection activities:
Proposed collection; comment request, 4466–4468

Justice Department
See Antitrust Division
See Immigration and Naturalization Service
See Justice Programs Office
RULES
Organization, functions, and authority delegations:
Prisons Bureau Director and Drug Enforcement Administrator; gift acceptance authority withdrawn, 4294–4296
NOTICES
Pollution control; consent judgments:
Vermont American Corp., 4468–4469

Justice Programs Office
NOTICES
Agency information collection activities:
Proposed collection; comment request, 4472

Labor Department
See Employment and Training Administration
See Pension and Welfare Benefits Administration

Land Management Bureau
NOTICES
Closure of public lands:
Arizona, 4461
Coal leases, exploration licenses, etc.:
Utah, 4461–4462
Environmental statements; availability, etc.:
Bisti/De-Na-Zin Wilderness Area, NM, 4462–4463
Grass Creek Resource Management Plan, WY, 4463–4464
Public land health standards and livestock grazing management guidelines—
New Mexico, 4464–4465

Maritime Administration
PROPOSED RULES
Cargo preference—U.S.-flag commercial vessels:
Carriage of agricultural exports, 4382–4385

Minerals Management Service
NOTICES
Environmental statements; availability, etc.:
Gulf of Mexico OCS—
Oil and gas operations, 4465–4466

National Aeronautics and Space Administration
NOTICES
Agency information collection activities:
Proposed collection; comment request, 4473
Meetings:
Advisory Council, 4473–4474
Space Science Advisory Committee, 4474
Technology and Commercialization Advisory Committee, 4473

National Bipartisan Commission on Future of Medicare
NOTICES
Meetings, 4474

National Highway Traffic Safety Administration
PROPOSED RULES
Anthropomorphic test devices:
Occupant crash protection—
Hybrid III test dummies; 3-year-old child dummy; design and performance specifications, 4385–4395
NOTICES
Meetings:
Ocular-based measures of driver alertness; conference, 4488–4490

National Institutes of Health
NOTICES
Meetings:
National Cancer Institute, 4454–4456
National Institute of Allergy and Infectious Diseases, 4456–4457
National Institute of Diabetes and Digestive and Kidney Diseases, 4457
National Institute of Neurological Disorders and Stroke, 4456
Scientific Review Center, 4457–4458

National Oceanic and Atmospheric Administration
NOTICES
Meetings:
Pacific Fishery Management Council, 4398–4399

Navy Department
NOTICES
Meetings:
Chief of Naval Operations Executive Panel, 4400

Northeast Dairy Compact Commission
PROPOSED RULES
Over-order price regulations:
Milk handlers; administrative assessment, 4353–4356

Nuclear Regulatory Commission
NOTICES
Applications, hearings, determinations, etc.:
Illinois Power Co., 4474–4476

Pension and Welfare Benefits Administration
PROPOSED RULES
Employee Retirement Income Security Act:
Employee pension and welfare benefit plans; recordkeeping and disclosure requirements; use of electronic media, 4505–4513

Personnel Management Office
PROPOSED RULES
Employment:
Suitability for employment in competitive service positions and Senior Executive Service career appointments; determinations and procedures, 4336–4342
NOTICES
Agency information collection activities:
Submission for OMB review; comment request, 4476–4477

Postal Rate Commission
RULES
Practice and procedure:
Domestic mail classification schedule; postage rates, fees, and classifications; changes
Correction, 4493–4494
NOTICES
Organization, functions, and authority delegations:
Docket room; change in hours of operation, 4477

Public Health Service
See Agency for Toxic Substances and Disease Registry
See Centers for Disease Control and Prevention
See Food and Drug Administration
See National Institutes of Health

Securities and Exchange Commission
NOTICES
Self-regulatory organizations; proposed rule changes:
American Stock Exchange LLC, 4480–4482
Chicago Board Options Exchange, Inc., 4482–4486
Applications, hearings, determinations, etc.:
ABM Industries Inc., 4477
MBL Life Assurance Corp. et al., 4477–4479
Old Mutual South Africa Equity Trust, 4479–4480

Surface Transportation Board
NOTICES
Railroad operation, acquisition, construction, etc.:
Central New England Railroad, Inc., 4490
Pioneer Railcorp et al., 4490

Tennessee Valley Authority
NOTICES
Environmental statements; availability, etc.:
North Alabama Pipeline Project, AL, 4486–4488

Toxic Substances and Disease Registry Agency
See Agency for Toxic Substances and Disease Registry

Transportation Department
See Federal Aviation Administration
See Federal Highway Administration
See Maritime Administration
See National Highway Traffic Safety Administration
See Surface Transportation Board

Treasury Department
See Internal Revenue Service
NOTICES
Agency information collection activities:
Submission for OMB review; comment request, 4490–4491

United States Information Agency
NOTICES
Art objects; importation for exhibition:
Sigmar Polke: Works on Paper (1963-1974), 4491–4492

Separate Parts In This Issue

Part II
Department of Housing and Urban Development, 4495–4503

Part III
Department of Labor, Pension and Welfare Benefits Administration, 4505–4513

Part IV
Congressional Budget Office, 4515–4516

Reader Aids
Consult the Reader Aids section at the end of this issue for phone numbers, online resources, finding aids, reminders, and notice of recently enacted public laws.

CFR PARTS AFFECTED IN THIS ISSUE

A cumulative list of the parts affected this month can be found in the Reader Aids section at the end of this issue.

5 CFR

Proposed Rules:

731 4336

7 CFR

301 4285
932 4286

Proposed Rules:

47 4342
319 4347
932 4350
1307 4353
1308 4353

9 CFR

Proposed Rules:

1 4356
3 4356

14 CFR

39 (3 documents) 4288, 4290, 4291

Proposed Rules:

39 (3 documents) 4367, 4370, 4372

21 CFR

564 4293

26 CFR

Proposed Rules:

1 4374

28 CFR

0 4294

29 CFR

Proposed Rules:

2520 4506

39 CFR

3001 4493

40 CFR

52 4296
63 4298
180 (2 documents) 4301, 4308
239 4311

Proposed Rules:

52 4379
63 4379
239 4379

45 CFR

2506 4315

46 CFR

Proposed Rules:

381 4382

47 CFR

73 4322
74 4322

49 CFR

Proposed Rules:

572 4385

50 CFR

18 4328

Rules and Regulations

Federal Register
Vol. 64, No. 18
Thursday, January 28, 1999

This section of the FEDERAL REGISTER contains regulatory documents having general applicability and legal effect, most of which are keyed to and codified in the Code of Federal Regulations, which is published under 50 titles pursuant to 44 U.S.C. 1510.

The Code of Federal Regulations is sold by the Superintendent of Documents. Prices of new books are listed in the first FEDERAL REGISTER issue of each week.

DEPARTMENT OF AGRICULTURE

Animal and Plant Health Inspection Service

7 CFR Part 301

[Docket No. 98–072–2]

Gypsy Moth Generally Infested Areas

AGENCY: Animal and Plant Health Inspection Service, USDA.

ACTION: Affirmation of interim rule as final rule.

SUMMARY: We are adopting as a final rule, without change, an interim rule that amended the gypsy moth quarantine and regulations by adding Indiana to the list of States quarantined because of gypsy moth and by adding Steuben County in Indiana to the list of generally infested areas. The interim rule was necessary in order to impose certain restrictions on the interstate movement from Steuben County of regulated articles to prevent the artificial spread of gypsy moth to noninfested areas of the United States.

EFFECTIVE DATE: The interim rule was effective on July 16, 1998.

FOR FURTHER INFORMATION CONTACT: Ms. Coanne E. O'Hern, Operations Officer, Domestic and Emergency Programs, PPQ, APHIS, 4700 River Road Unit 134, Riverdale, MD 20737–1236, (301) 734–8247; or e-mail: coanne.e.o'hern@usda.gov.

SUPPLEMENTARY INFORMATION:

Background

In an interim rule effective and published in the **Federal Register** on July 16, 1998 (63 FR 38279–38280, Docket No. 98–072–2), we amended the gypsy moth quarantine and regulations in 7 CFR part 301 by adding Indiana to the list in § 301.45(a) of States quarantined because of gypsy moth, and by adding Steuben County, IN, to the list in § 301.45–3(a) of generally infested areas.

Comments on the interim rule were required to be received on or before September 14, 1998. We did not receive any comments. Therefore, for the reasons given in the interim rule, we are adopting the interim rule as a final rule.

This action also affirms the information contained in the interim rule concerning Executive Orders 12866, 12372, and 12988, and the Paperwork Reduction Act.

Further, for this action, the Office of Management and Budget has waived the review process required by Executive Order 12866.

Regulatory Flexibility Act

This document affirms an interim rule that amended the gypsy moth quarantine and regulations by adding Steuben County, IN, to the list of generally infested areas. This action was necessary to prevent the artificial spread of gypsy moth to noninfested areas of the United States.

This action affects the interstate movement of regulated articles and outdoor household articles (OHA's) from and through Steuben County, IN. There are several types of restrictions that apply to this newly quarantined area. These restrictions will have their primary impact on persons moving OHA's, nursery stock, logs and wood chips, and mobile homes interstate from Steuben County, IN, to any area that is not generally infested.

Under the regulations, OHA's may not be moved interstate from a generally infested area unless they are accompanied by either a certificate issued by an inspector or an OHA document issued by the owner of the articles, attesting to the absence of any life stage of the gypsy moth. Most individual homeowners moving their own articles who comply with the regulations choose to self-inspect and issue an OHA document. This takes a few minutes and involves no monetary cost. Individuals may also have State certified pesticide applicators, trained by the State or U.S. Department of Agriculture (USDA), inspect and issue certificates.

With two exceptions, regulated articles (for example, logs, pulpwood, and wood chips; mobile homes; and nursery stock) may not be moved interstate from a generally infested area to any area that is not generally infested unless they are accompanied by a certificate or limited permit issued by an inspector. The first exception is that a regulated article may be moved from a generally infested area without a certificate if it is moved by the USDA for experimental or scientific purposes and is accompanied by a permit issued by the Administrator of the Animal and Plant Health Inspection Service. The second exception is that logs, pulpwood, and wood chips may be moved without a certificate or limited permit if the person moving the articles attaches a statement to the waybill stating that he or she has inspected the articles and has found them free of any lifestage of the gypsy moth. This exception minimizes costs with regard to logs, pulpwood, and wood chips.

Persons moving regulated articles interstate from a generally infested area to any area that is not generally infested may obtain a certificate or limited permit from an inspector or a qualified certified applicator. Inspectors will issue these documents at no charge, but costs may result from delaying the movement of commercial articles while waiting for the inspection. These documents may also be self-issued under a compliance agreement. Certificates for interstate movement of mobile homes from a generally infested area may also be obtained from qualified certified applicators.

When inspection of regulated articles or OHA's reveals gypsy moth, treatment is often necessary. Treatment is done by qualified certified applicators, which are private businesses that charge, on the average, $75 to $100 to treat a shipment of articles. Most qualified certified applicators are small businesses. By declaring an area as a generally infested area, the regulations may increase business for qualified certified applicators located in Steuben County, Indiana. It is estimated that these businesses will average $75 to $150 per month in additional income per business.

Entities in the newly quarantined areas that will incur the most costs from the interim rule will be establishments moving trees or shrubs with roots, such as nurseries. We estimate that approximately 2 such establishments move approximately 10 shipments of trees and shrubs each year from the newly quarantined area. Both of these establishments are believed to be small

entities. These establishments will need to be inspected by a State or Federal inspector. If the inspection reveals signs of gypsy moth, the establishment will have to be treated in order to ship regulated articles outside the generally infested area. We estimate that annually, one of these establishments may require treatment, and that the average area to be treated will be 20 acres. At an average treatment cost of $10 to $20 per acre, the average total annual cost to each establishment will be $200 to $400.

The Christmas tree industry and establishments that sell other forest products and that move their products interstate from the newly quarantined area will also bear direct costs from the interim rule. There are approximately two farms that sell forest products and Christmas trees in the newly quarantined area. These account for less than one percent of the total number of such farms in Indiana. Both of these establishments are believed to be small entities. Services of an inspector will be available without charge to inspect these farms and issue certificates and permits. We anticipate that both of these farms will be free of gypsy moth and will meet the requirements for certification by having inspectors certify that the tree farms are free from gypsy moth. This alternative is less costly than inspecting or treating each individual shipment of trees and will thus minimize the economic impact of the change to the regulations for the newly quarantined area.

Under these circumstances, the Administrator of the Animal and Plant Health Inspection Service has determined that this action will not have a significant economic impact on a substantial number of small entities.

List of Subjects in 7 CFR Part 301

Agricultural commodities, Plant diseases and pests, Quarantine, Reporting and recordkeeping requirements, Transportation.

PART 301—DOMESTIC QUARANTINE NOTICES

Accordingly, we are adopting as a final rule, without change, the interim rule that amended 7 CFR part 301 and that was published at 63 FR 38279–38280 on July 16, 1998.

Authority: 7 U.S.C. 147a, 150bb, 150dd, 150ee, 150ff, 161, 162, and 164–167; 7 CFR 2.22, 2.80, and 371.2(c).

Done in Washington, DC, this 21st day of January 1999.

Craig A. Reed,

Administrator, Animal and Plant Health Inspection Service.

[FR Doc. 99–1919 Filed 1–27–99; 8:45 am]

BILLING CODE 3410–34–P

DEPARTMENT OF AGRICULTURE

Agricultural Marketing Service

7 CFR Part 932

[Docket No. FV99–932–2 IFR]

Olives Grown in California; Modification to Handler Membership on the California Olive Committee

AGENCY: Agricultural Marketing Service, USDA.

ACTION: Interim final rule with request for comments.

SUMMARY: This rule invites comments on modifications to the handler membership on the California Olive Committee (Committee). The Committee locally administers the California olive marketing order (order) which regulates the handling of olives grown in California. The Committee is composed of 16 industry members of which 8 are producers and 8 are handlers. Current handler membership is allocated between cooperative marketing organizations and independent handlers (handlers not affiliated with cooperatives), and the number of handler members that may be affiliated with any one handler is limited to two. This rule removes the distinction between cooperative and independent handlers, removes the limitation on handler affiliation, and reallocates handler membership on the basis of the total quantity of olives handled. These modifications will allow two vacant handler member positions on the Committee to be filled. This rule was unanimously recommended by the Committee.

DATES: Effective January 29, 1999; comments received by March 29, 1999 will be considered prior to issuance of a final rule.

ADDRESSES: Interested persons are invited to submit written comments concerning this rule. Comments must be sent to the Docket Clerk, Fruit and Vegetable Programs, AMS, USDA, room 2525–S, P.O. Box 96456, Washington, DC 20090–6456; Fax: (202) 720–5698; or E-mail: moabdocket__clerk@usda.gov. All comments should reference the docket number and the date and page number of this issue of the **Federal Register** and will be made available for public inspection in the Office of the Docket Clerk during regular business hours.

FOR FURTHER INFORMATION CONTACT: Mary Kate Nelson, Marketing Specialist, California Marketing Field Office, Marketing Order Administration Branch, F&V, AMS, USDA, 2202 Monterey Street, suite 102B, Fresno, California 93721; telephone: (559) 487–5901, Fax: (559) 487–5906; or George Kelhart, Technical Advisor, Marketing Order Administration Branch, F&V, AMS, USDA, room 2525–S, P.O. Box 96456, Washington, DC 20090–6456; telephone: (202) 720–9921; Fax: (202) 720–5698. Small businesses may request information on complying with this regulation, or obtain a guide on complying with fruit, vegetable, and specialty crop marketing agreements and orders by contacting Jay Guerber, Marketing Order Administration Branch, Fruit and Vegetable Programs, AMS, USDA, P.O. Box 96456, room 2525–S, Washington, DC 20090–6456; telephone: (202) 720–2491; Fax: (202) 720–5698, or E-mail: Jay__N__Guerber@usda.gov. You may view the marketing agreement and order small business compliance guide at the following web site: http://www.ams.usda.gov/fv/moab.html.

SUPPLEMENTARY INFORMATION: This rule is issued under Marketing Agreement No. 148 and Order No. 932, both as amended (7 CFR part 932), regulating the handling of olives grown in California, hereinafter referred to as the ''order.'' The marketing agreement and order are effective under the Agricultural Marketing Agreement Act of 1937, as amended (7 U.S.C. 601–674), hereinafter referred to as the ''Act.''

The Department of Agriculture (Department) is issuing this rule in conformance with Executive Order 12866.

This rule has been reviewed under Executive Order 12988, Civil Justice Reform. This rule is not intended to have retroactive effect. This rule will not preempt any State or local laws, regulations, or policies, unless they present an irreconcilable conflict with this rule.

The Act provides that administrative proceedings must be exhausted before parties may file suit in court. Under section 608c(15)(A) of the Act, any handler subject to an order may file with the Secretary a petition stating that the order, any provision of the order, or any obligation imposed in connection with the order is not in accordance with law and request a modification of the order or to be exempted therefrom. A handler is afforded the opportunity for

a hearing on the petition. After the hearing the Secretary would rule on the petition. The Act provides that the district court of the United States in any district in which the handler is an inhabitant, or has his or her principal place of business, has jurisdiction to review the Secretary's ruling on the petition, provided an action is filed not later than 20 days after date of the entry of the ruling.

Section 932.25 of the order provides for the establishment of the Committee to locally administer the terms and provisions of the order. The Committee is composed of 16 industry members, each with an alternate. Of the 16 industry members, 8 are producers and 8 are handlers. This section also specifies how the handler membership on the Committee is allocated. Authority is provided for the Committee, with the approval of the Secretary, to change the allocation of both producer and handler members as may be necessary to assure equitable representation.

Section 932.159 of the administrative rules and regulations provides that two members shall represent cooperative marketing organizations and six members shall represent handlers who are not cooperative marketing organizations. In addition, § 932.160 limits to two the number of handler members that may be affiliated with the same handler.

The Committee met on December 10, 1998, and unanimously recommended modifying the rules and regulations to remove the distinction between cooperative and independent handlers, and the limitation on the number of handler members that may be affiliated with the same handler. It also unanimously recommended that the two handlers who handled the largest and second largest total volume of olives during the crop year in which nominations are made and the preceding crop year be represented by three members each, and that the third largest handler be represented by two members. This rule is intended to modify the Committee's handler membership to reflect structural changes within the handler segment of the industry, and to enable the Committee to operate at full strength; i.e., with all eight handler and producer positions filled.

The structure of the olive industry has changed over the years and the number of handlers, both cooperative and independent, has decreased. At one time, there were a number of cooperative marketing organizations and independent handlers and the Committee's structure was designed so that four of the eight handler seats were held by cooperatives and four were held by independents. This representation was also weighted by the volume of olives handled so that if one group, either cooperatives or independents, handled 65 percent or more of the total industry's volume handled during the nominating crop year and the preceding crop year, that group would have five seats on the Committee and the other group would have three seats.

In 1993, handler membership on the Committee was reallocated to reflect changes within the industry. The number of industry handlers declined to only five handlers—one cooperative and four independents. At that time, § 932.159 of the order's rules and regulations was modified to reapportion handler membership to provide cooperative handlers with two seats on the Committee and independent handlers with six seats.

Since 1993, the number of handlers in the olive industry has continued to decline. Today there are three handlers remaining—one cooperative and two independents. Because there is only one existing cooperative, the Committee believes that the distinction regarding cooperative and independent handlers on the Committee is no longer appropriate or necessary.

Additionally, § 932.160 specifies that no more than two nominees for member and alternate member positions may be affiliated with the same handler. Because there are only three handlers remaining in the industry, this restriction has resulted in two vacant handler positions on the Committee that cannot be filled.

To allow these positions to be filled and enable the Committee to operate at full strength, the Committee recommended that § 932.159 be revised to eliminate the distinction between cooperative marketing organizations and independent handlers (or handlers not affiliated with a cooperative marketing organization). It also recommended that the eight handler seats on the Committee be reallocated based on the total volume of olives handled during the crop year in which nominations are made and the preceding crop year, with the handlers handling the first and second largest volume being represented with three members each, and the remaining handler being represented with two members.

The reallocation of handler membership in § 932.159 makes the two nominee limitation on affiliation with the same handler specified in § 932.160 unnecessary, and that section is removed.

These changes are designed to modify the Committee's handler membership to reflect structural changes within the handler segment of the industry, and to remove the current barriers to filling the two vacant handler positions on the Committee.

Pursuant to requirements set forth in the Regulatory Flexibility Act (RFA), the Agricultural Marketing Service (AMS) has considered the economic impact of this action on small entities. Accordingly, AMS has prepared this initial regulatory flexibility analysis.

The purpose of the RFA is to fit regulatory actions to the scale of business subject to such actions in order that small businesses will not be unduly or disproportionately burdened. Marketing orders issued pursuant to the Act, and rules issued thereunder, are unique in that they are brought about through group action of essentially small entities acting on their own behalf. Thus, both statutes have small entity orientation and compatibility.

There are 3 handlers of California olives who are subject to regulation under the marketing order and approximately 1,200 olive producers in the regulated area. Small agricultural service firms have been defined by the Small Business Administration (13 CFR 121.601) as those having annual receipts of less than $5,000,000, and small agricultural producers are defined as those having annual receipts of less than $500,000. None of the olive handlers may be classified as small entities.

Based on a review of historical and preliminary price and marketing information, total grower revenue for the 1998–99 crop year (August 1 through July 31) is estimated to be approximately $39,500,000, and the average grower revenue will be approximately $33,000. Thus, it can be concluded that the majority of producers of California olives may be classified as small entities.

This rule modifies the order's administrative rules and regulations regarding the structure of handler membership on the Committee. The Committee locally administers the order and is composed of 16 industry members. Eight of the 16 industry members are producers and 8 are handlers. Current handler membership provisions distinguish between cooperative marketing organizations and independent handlers specifying that two members shall represent cooperative marketing organizations and six members shall represent handlers who are not cooperative marketing organizations. The handler nominee provisions also specify that no more than two nominees for handler member

and alternate member positions may be affiliated with the same handler.

This rule modifies the order's rules and regulations to remove the distinction between cooperative and independent handlers, and to specify that the number of members representing each of the three currently existing industry handlers shall be based on the total volume of olives handled during the nominating crop year and the preceding crop year, with the two handlers handling the largest and second largest volume of olives represented by three members and alternates each, and the remaining handler represented by two members and alternates. This rule also removes provisions limiting the number of members to which each handler is entitled because the limitation is no longer necessary. The changes were unanimously recommended by the Committee and are intended to modify the Committee's handler membership to reflect structural changes within the handler segment of the industry, and to remove current barriers to filling two vacant handler positions on the Committee. Authority for this rule is provided in § 932.25 which allows the Committee, with the approval of the Secretary, to reallocate the Committee's producer or handler membership as necessary to assure equitable representation.

Removal of the distinction between cooperative and independent handlers will not have any impact on handlers or producers in the California olive industry.

One alternative to this rule discussed at the meeting was to leave the language in § 932.159 unchanged; however, the Committee believes that the distinction between cooperative and independent is no longer appropriate, because there is only one existing cooperative in the industry and two independent handlers. Another alternative discussed at the meeting was to leave § 932.160 of the order's rules and regulations unchanged so that only two members may be affiliated with the same handler, but with only three handlers currently in the industry that would result in uneven representation between growers with eight members and handlers with six members, and would fail to assure equitable representation on the Committee as is required pursuant to § 932.25.

This rule will not impose any additional reporting or recordkeeping requirements on any of the three olive handlers. As with all Federal marketing order programs, reports and forms are periodically reviewed to reduce information requirements and duplication by industry and public sector agencies. In addition, the Department has not identified any relevant Federal rules that duplicate, overlap, or conflict with this proposed rule.

Further, the Committee's meeting was widely publicized throughout the olive industry and all interested persons were invited to attend the meeting and participate in Committee deliberations on all issues. Like all Committee meetings, the December 10, 1998, meeting was a public meeting and all entities, both large and small, were able to express their views on this issue. All three industry handlers are currently represented on the Committee and participated in the deliberations. Finally, interested persons are invited to submit information on the regulatory and informational impacts of this action on small businesses.

After consideration of all relevant material presented, including the Committee's recommendation, and other information, it is found that this interim final rule, as hereinafter set forth, will tend to effectuate the declared policy of the Act.

This rule invites comments on modifications to the handler membership on the Committee. Any comments received will be considered prior to finalization of this rule.

Pursuant to 5 U.S.C. 553, it is also found and determined upon good cause that it is impracticable, unnecessary, and contrary to the public interest to give preliminary notice prior to putting this rule into effect and that good cause exists for not postponing the effective date of this rule until 30 days after publication in the **Federal Register** because: (1) There are currently two vacant handler member seats on the Committee that cannot be filled until these modifications to the administrative rules and regulations are implemented, and it is important that the Committee operate at full strength; (2) timely implementation of this action will allow the vacancies to be filled; (3) the Committee unanimously recommended these changes at a public meeting and interested parties had an opportunity to provide input; (4) all three handlers are represented on the Committee and participated in deliberations; and (5) this rule provides a 60-day comment period and any comments received will be considered prior to finalization of this rule.

List of Subjects in 7 CFR Part 932

Marketing agreements, Olives, Reporting and recordkeeping requirements.

For the reasons set forth in the preamble, 7 CFR part 932 is amended as follows:

PART 932—OLIVES GROWN IN CALIFORNIA

1. The authority citation for 7 CFR part 932 continues to read as follows:

Authority: 7 U.S.C. 601–674.

2. Section 932.159 is revised to read as follows:

§ 932.159 Reallocation of handler membership.

Pursuant to § 932.25, handler representation on the committee is reallocated to provide that the two handlers who handled the largest and second largest total volume of olives during the crop year in which nominations are made and in the preceding crop year shall be represented by three members and alternate members each, and the remaining handler shall be represented by two members and alternate members.

§ 932.160 [Removed]

3. Section 932.160 is removed.

Dated: January 22, 1999.

Robert C. Keeney,

Deputy Administrator, Fruit and Vegetable Programs.

[FR Doc. 99–1970 Filed 1–27–99; 8:45 am]

BILLING CODE 3410–02–P

DEPARTMENT OF TRANSPORTATION

Federal Aviation Administration

14 CFR Part 39

[Docket No. 97–SW–41–AD; Amendment 39–11005; AD 99–02–13]

RIN 2120–AA64

Airworthiness Directives, Eurocopter France Model AS332C, L, and L1 Helicopters

AGENCY: Federal Aviation Administration, DOT.

ACTION: Final rule.

SUMMARY: This amendment adopts a new airworthiness directive (AD), applicable to Eurocopter France (Eurocopter) Model AS332C, L, and L1 helicopters, that requires the replacement of certain main rotor hub spindles (spindles) and flapping hinge pins (pins). This amendment is prompted by testing of aged frequency adapters, which shows that premature failure of the spindles and pins can occur due to increased loading from increased stiffness of the aged frequency

adapters. The actions specified by this AD are intended to prevent the loss of a main rotor blade and subsequent loss of control of the helicopter.

DATES: Effective March 4, 1999.

The incorporation by reference of certain publications listed in the regulations is approved by the Director of the Federal Register as of March 4, 1999.

ADDRESSES: The service information referenced in this AD may be obtained from American Eurocopter Corporation, 2701, Forum Drive, Grand Prairie, Texas 75053–4005, telephone (972) 641–3460, fax (972) 641–3527. This information may be examined at the FAA, Office of the Regional Counsel, Southwest Region, 2601 Meacham Blvd., Room 663, Fort Worth, Texas; or at the Office of the Federal Register, 800 North Capitol Street, NW., suite 700, Washington, DC.

FOR FURTHER INFORMATION CONTACT: Mike Mathias, Aerospace, Engineer, FAA, Rotorcraft Directorate, 2601 Meacham Blvd, Fort Worth, Texas 76137, telephone 817–222–5123, fax 817–222–5961.

SUPPLEMENTARY INFORMATION: A proposal to amend part 39 of the Federal Aviation Regulations (14 CFR part 39) to include an airworthiness directive (AD) that is applicable to Eurocopter Model AS332C, L, and L1 helicopters was published in the **Federal Register** on October 27, 1998 (63 FR 57257). That action proposed to require replacing certain spindles and pins.

Interested persons have been afforded an opportunity to participate in the making of this amendment. No comments were received on the proposal or the FAA's determination of the cost to the public. The FAA has determined that air safety and the public interest require the adoption of the rule as proposed.

The FAA estimates that 4 helicopters of U.S. registry will be affected by this AD, that it will take approximately 4 work hours per helicopter to accomplish the required actions, and that the average labor rate is $60 per work hour. Required parts will cost approximately $21,600 per helicopter. Based on these figures, the total cost impact of the AD on U.S. operators is estimated to be $87,360.

The regulations adopted herein will not have substantial director effects on the States, on the relationship between the national government and the States, or on the distribution of power and responsibilities among the various levels of government. Therefore, in accordance with Executive Order 12612, it is determined that this final rule does not have sufficient federalism implications to warrant the preparation of a Federalism Assessment.

For the reasons discussed above, I certify that this action (1) is not a ''significant regulatory action'' under Executive Order 12866; (2) is not a ''significant rule'' under DOT Regulatory Policies and Procedures (44 FR 11034, February 26, 1979); and (3) will not have a significant economic impact, positive or negative, on a substantial number of small entities under the criteria of the Regulatory Flexibility Act. A final evaluation has been prepared for this action and it is contained in the Rules Docket. A copy of it may be obtained from the Rules Docket at the location provided under the caption **ADDRESSES**.

List of Subjects in 14 CFR Part 39

Air transportation, Aircraft, Aviation safety, Incorporation by reference, Safety.

Adoption of the Amendment

Accordingly, pursuant to the authority delegated to me by the Administrator, the Federal Aviation Administration amends part 39 of the Federal Aviation Regulations (14 CFR part 39) as follows:

PART 39—AIRWORTHINESS DIRECTIVES

1. The authority citation for part 39 continues to read as follows:

Authority: 49 U.S.C. 106(g), 40113, 44701.

§ 39.13 [Amended]

2. Section 39.13 is amended by adding a new airworthiness directive to read as follows:

AD 99–02–13 Eurocopter France: Amendment 39–11005. Docket No. 97–SW–41–AD.

Applicability: Eurocopter France (Eurocopter) Model AS332C, L, and L1 helicopters with main rotor hub spindles (spindles), part number (P/N) 332A31–1390–00 through –07 or 332A31–1398–00 or flapping hinge pin (pin), P/N 332A31–1380–all dash numbers, installed, certificated in any category.

Note 1: This AD applies to each helicopter identified in the preceding applicability provision, regardless of whether it has been modified, altered, or repaired in the area subject to the requirements of this AD. For helicopters that have been modified, altered, or repaired so that the performance of the requirements of this AD is affected, the owner/operator must use the authority provided in paragraph (g) to request approval from the FAA. This approval may address either no action, if the current configuration eliminates the unsafe condition, or different actions necessary to address the unsafe condition described in this AD. Such a request should include an assessment of the effect of the changed configuration on the unsafe condition addressed by this AD. In no case does the presence of any modification, alternation, or repair remove any helicopter from the applicability of this AD.

Compliance: Required as indicated, unless accomplished previously.

To prevent failure of the spindles or pins that could result in loss of a main rotor blade and subsequent loss of control of the helicopter, accomplish the following:

(a) For the spindles and pins that have never been overhauled, remove the spindles and pins and replace them with airworthy spindles and pins in accordance with paragraphs 2.B.1)a) through 2.B.1)d) and 2.B.2) of the Accomplishment Instructions of Eurocopter France Service Bulletin No. 01.00.44, dated March 26, 1996 (SB), as follows:

(i) Within 6 calendar months of spindles and pins that have been in service for 12 or more calendar years.

(ii) Within 18 calendar months for spindles and pins that have been in service for 8 or more calendar years but less than 12 calendar years.

(b) For the spindles and pins that have been overhauled at least once, remove the spindles and pins and replace them with airworthy spindles and pins in accordance with paragraphs 2.B.1)a) through 2.B.1)d) and 2.B.2) of the SB as follows:

(i) Within 3 calendar months for spindles and pins that have been in service for 6 or more calendar years since last overhaul.

(ii) Within 15 calendar months for spindles and pins that have been in service for 4 or more calendar years but less than 6 calendar years since last overhaul.

(c) Remove spindle, Serial Number (S/N) FR 25012, and pins, S/N's M 243, FR 139, FR 230, M 127, or M 112, and replace them with airworthy spindles and pins in accordance with paragraphs 2.B.1)a) through 2.B.1)d) and 2.B.2) of the SB within 6 calendar months.

(d) Remove spindle, S/N FR 25866, and replace it with an airworthy spindle in accordance with paragraphs 2.B.1)a) through 2.B.1)d) and 2.B.2) of the SB within 18 calendar months.

(e) This AD revises the Airworthiness Limitations Section of the Maintenance Manual by establishing a new retirement life of 8 calendar years for the spindles, P/N 332A31–1390–00 through –07 and 332A31–1398–00, and pins, P/N 332A31–1380–all dash numbers, except as otherwise specifically limited by this AD.

(f) Installation of a main rotor hub with modification 332A07–43100 constitutes terminating action for the requirements of this AD.

(g) An alternative method of compliance or adjustment of the compliance time that provides an acceptable level of safety may be used if approved by the Manager, Rotorcraft Standards Staff, Rotorcraft Directorate, FAA. Operators shall submit their requests through an FAA Principal Maintenance Inspector, who may concur or comment and then send it to the Manager, Rotorcraft Standards Staff.

Note 2: Information concerning the existence of approved alternative methods of compliance with this AD, if any, may be

obtained from the FAA, Office of the Regional Counsel, Southwest Region, 2601 Meacham Blvd., Room 663, Fort Worth, Texas 76137.

(h) Special flight permits may be issued in accordance with sections 21.197 and 21.199 of the Federal Aviation Regulations (14 CFR 21.197 and 21.199) to operate the helicopter to a location where the requirements of this AD can be accomplished.

(i) The modification shall be done in accordance with paragraphs 2.B.1)a) through 2.B.1)d) and 2.B.2) of the Accomplishment Instructions of Eurocopter France Service Bulletin No. 01.00.44, dated March 26, 1996. This incorporation by reference was approved by the Director of the Federal Register in accordance with 5 U.S.C. 552(a) and 1 CFR part 51. Copies may be obtained from American Eurocopter Corporation, 2701 Forum Drive, Grand Prairie, Texas 75053–4005, telephone (972) 641–3460, fax (972) 641–3527. Copies may be inspected at the FAA, Office of the Regional Counsel, Southwest Region, 2601 Meacham Blvd., Room 663, Fort Worth, Texas; or at the Office of the Federal Register, 800 North Capital Street, NW., suite 700, Washington, DC.

(j) This amendment becomes effective on March 4, 1999.

Note 3: The subject of this AD is addressed in Direction Generale De L'Aviation Civile (France) AD 96–100–058–(B), dated May 22, 1996.

Issued in Fort Worth, Texas, on January 12, 1999.

Eric Bries,

Acting Manager, Rotorcraft Directorate, Aircraft Certification Service.

[FR Doc. 99–1236 Filed 1–27–99; 8:45 am]

BILLING CODE 4910–13–M

DEPARTMENT OF TRANSPORTATION

Federal Aviation Administration

14 CFR Part 39

[Docket No. 98–CE–52–AD; Amendment 39–11013; AD 99–03–01]

RIN 2120–AA64

Airworthiness Directives; Schempp-Hirth K.G. Models Standard-Cirrus, Nimbus-2, JANUS, and Mini-Nimbus HS–7 Sailplanes

AGENCY: Federal Aviation Administration, DOT.

ACTION: Final rule.

SUMMARY: This amendment adopts a new airworthiness directive (AD) that applies to certain Schempp-Hirth K.G. (Schempp-Hirth) Models Standard-Cirrus, Nimbus-2, JANUS, and Mini-Nimbus HS–7 sailplanes. This AD requires installing a safety device for the tailplane locking hook. This AD is the result of mandatory continuing airworthiness information (MCAI) issued by the airworthiness authority for Germany. The actions specified by this AD are intended to prevent the locking hook on the tailplane attachment bracket from disengaging, which could result in the horizontal tailplane coming loose from the fin with possible loss of longitudinal control of the sailplane.

DATES: Effective March 12, 1999.

The incorporation by reference of certain publications listed in the regulations is approved by the Director of the Federal Register as of March 12, 1999.

ADDRESSES: Service information that applies to this AD may be obtained from Schempp-Hirth Flugzeugbau GmbH, Postbox 14 43, D–73222 Kirchheim unter Teck, Federal Republic of Germany. This information may also be examined at the Federal Aviation Administration (FAA), Central Region, Office of the Regional Counsel, Attention: Rules Docket No. 98–CE–52–AD, Room 1558, 601 E. 12th Street, Kansas City, Missouri 64106; or at the Office of the Federal Register, 800 North Capitol Street, NW, suite 700, Washington, DC.

FOR FURTHER INFORMATION CONTACT: Mr. Mike Kiesov, Aerospace Engineer, FAA, Small Airplane Directorate, 1201 Walnut, suite 900, Kansas City, Missouri 64106; telephone: (816) 426–6934; facsimile: (816) 426–2169.

SUPPLEMENTARY INFORMATION:

Events Leading to the Issuance of This AD

A proposal to amend part 39 of the Federal Aviation Regulations (14 CFR part 39) to include an AD that would apply to certain Schempp-Hirth Models Standard-Cirrus, Nimbus-2, JANUS, and Mini-Nimbus HS–7 sailplanes was published in the **Federal Register** as a supplemental notice of proposed rulemaking (NPRM) on November 9, 1998 (63 FR 60224). The supplemental NPRM proposed to require installing a safety device for the tailplane locking hook. Accomplishment of the proposed action as specified in the supplemental NPRM would be in accordance with Schempp-Hirth Appendix to Technical Note No. 278–36, 286–33, 295–26, 328–11, 798–3, dated November 11, 1994.

The NPRM was the result of mandatory continuing airworthiness information (MCAI) issued by the airworthiness authority for Germany.

Interested persons have been afforded an opportunity to participate in the making of this amendment. No comments were received on the proposed rule or the FAA's determination of the cost to the public.

The FAA's Determination

After careful review of all available information related to the subject presented above, the FAA has determined that air safety and the public interest require the adoption of the rule as proposed except for minor editorial corrections. The FAA has determined that these minor corrections will not change the meaning of the AD and will not add any additional burden upon the public than was already proposed.

Cost Impact

The FAA estimates that 91 sailplanes in the U.S. registry will be affected by this AD, that it will take approximately 3 workhours per sailplane to accomplish this action, and that the average labor rate is approximately $60 an hour. Parts cost approximately $35 per sailplane. Based on these figures, the total cost impact of this AD on U.S. operators is estimated to be $19,565, or $215 per sailplane.

Compliance Time of This AD

Although the unsafe condition identified in this AD occurs during flight and is a direct result of sailplane operation, the FAA has no way of determining how much time will elapse before the tailplane is not securely attached to the fin. For example, the condition could exist on a sailplane with 200 hours time-in-service (TIS), but could be developing on a sailplane with 50 hours TIS and not actually exist on this sailplane until 300 hours TIS. For this reason, the FAA has determined that a compliance based on calendar time should be utilized in this AD in order to assure that the unsafe condition is addressed on all sailplanes in a reasonable time period.

Differences Between the Technical Note, German AD, and This AD

Both Schempp-Hirth Technical Note No. 278–36, 286-33, 295–26, 328–11, 798–3, dated November 11, 1994, and German AD 95–015, dated December 15, 1994, apply to the Model Nimbus-2M sailplanes. This sailplane model is not type certificated for operation in the United States and therefore is not covered by the applicability of this AD.

The Model Nimbus-2M sailplanes could be operating in the United States with an experimental certificate. The FAA is including a NOTE in this AD to recommend that any person operating a Model Nimbus-2M sailplane in the United States with an experimental certificate accomplish the actions specified in the technical note.

Regulatory Impact

The regulations adopted herein will not have substantial direct effects on the States, on the relationship between the national government and the States, or on the distribution of power and responsibilities among the various levels of government. Therefore, in accordance with Executive Order 12612, it is determined that this final rule does not have sufficient federalism implications to warrant the preparation of a Federalism Assessment.

For the reasons discussed above, I certify that this action (1) is not a ''significant regulatory action'' under Executive Order 12866; (2) is not a ''significant rule'' under DOT Regulatory Policies and Procedures (44 FR 11034, February 26, 1979); and (3) will not have a significant economic impact, positive or negative, on a substantial number of small entities under the criteria of the Regulatory Flexibility Act. A copy of the final evaluation prepared for this action is contained in the Rules Docket. A copy of it may be obtained by contacting the Rules Docket at the location provided under the caption **ADDRESSES**.

List of Subjects in 14 CFR Part 39

Air transportation, Aircraft, Aviation safety, Incorporation by reference, Safety.

Adoption of the Amendment

Accordingly, pursuant to the authority delegated to me by the Administrator, the Federal Aviation Administration amends part 39 of the Federal Aviation Regulations (14 CFR part 39) as follows:

PART 39—AIRWORTHINESS DIRECTIVES

1. The authority citation for part 39 continues to read as follows:

Authority: 49 U.S.C. 106(g), 40113, 44701.

§ 39.13 [Amended]

2. Section 39.13 is amended by adding a new airworthiness directive (AD) to read as follows:

99–03–01 Schempp-Hirth K.G.: Amendment 39–11013; Docket No. 98–CE–52–AD.

Applicability: The following sailplane models and serial numbers, certificated in any category:

Models	Serial Nos.
Standard Cirrus	573, 586, 593, 595, 597 through 599, 601 through 701.
Nimbus-2	86, 93, and 96 through 116, 118 through 129, 131, and 176.
JANUS	1 through 55, and 59.
Mini-Nimbus HS–7	1 through 60, and 65.

Note 1: Both Schempp-Hirth Technical Note No. 278–36, 286–33, 295–26, 328–11, 798–3, dated November 11, 1994, and German AD 95–015, dated December 15, 1994, apply to the Model Nimbus-2M sailplanes. This sailplane model is not type certificated for operation in the United States, and therefore is not covered by the applicability of this AD. The Model Nimbus-2M sailplanes could be operating in the United States with an experimental certificate. The FAA recommends that any person operating a Model Nimbus-2M sailplane in the United States with an experimental certificate accomplish the actions specified in the technical note.

Note 2: This AD applies to each sailplane identified in the preceding applicability provision, regardless of whether it has been modified, altered, or repaired in the area subject to the requirements of this AD. For sailplanes that have been modified, altered, or repaired so that the performance of the requirements of this AD is affected, the owner/operator must request approval for an alternative method of compliance in accordance with paragraph (c) of this AD. The request should include an assessment of the effect of the modification, alteration, or repair on the unsafe condition addressed by this AD; and, if the unsafe condition has not been eliminated, the request should include specific proposed actions to address it.

Compliance: Required within the next 6 calendar months after the effective date of this AD, unless already accomplished.

To prevent the locking hook on the tailplane attachment bracket from disengaging, which could result in the horizontal tailplane coming loose from the fin with possible loss of longitudinal control of the sailplane, accomplish the following:

(a) Install a safety device for the tailplane locking hook in accordance with Schempp-Hirth Appendix to Technical Note No. 278–36, 286–33, 295–26, 328–11, 798–3, dated November 11, 1994.

(b) Special flight permits may be issued in accordance with sections 21.197 and 21.199 of the Federal Aviation Regulations (14 CFR 21.197 and 21.199) to operate the sailplane to a location where the requirements of this AD can be accomplished.

(c) An alternative method of compliance or adjustment of the compliance time that provides an equivalent level of safety may be approved by the Manager, Small Airplane Directorate, FAA, 1201 Walnut, suite 900, Kansas City, Missouri 64106. The request shall be forwarded through an appropriate FAA Maintenance Inspector, who may add comments and then send it to the Manager, Small Airplane Directorate.

Note 3: Information concerning the existence of approved alternative methods of compliance with this AD, if any, may be obtained from the Small Airplane Directorate.

(d) Questions or technical information related to the service information referenced in this document should be directed to Schempp-Hirth Flugzeugbau GmbH, Postbox 14 43, D–73222 Kirchheim unter Teck, Federal Republic of Germany. This service information may be examined at the FAA, Central Region, Office of the Regional Counsel, Room 1558, 601 E. 12th Street, Kansas City, Missouri 64106.

(e) The installation required by this AD shall be done in accordance with Schempp-Hirth Appendix to Technical Note No. 278–36, 286–33, 295–26, 328–11, 798–3, dated November 11, 1994. This incorporation by reference was approved by the Director of the Federal Register in accordance with 5 U.S.C. 552(a) and 1 CFR part 51. Copies may be obtained from Schempp-Hirth Flugzeugbau GmbH, Postbox 14 43, D–73222 Kirchheim unter Teck, Federal Republic of Germany. Copies may be inspected at the FAA, Central Region, Office of the Regional Counsel, Room 1558, 601 E. 12th Street, Kansas City, Missouri, or at the Office of the Federal Register, 800 North Capitol Street, NW, suite 700, Washington, DC.

Note 4: The subject of this AD is addressed in German AD 95–015, dated December 15, 1994.

(f) This amendment becomes effective on March 12, 1999.

Issued in Kansas City, Missouri, on January 19, 1999.

Michael Gallagher,

Manager, Small Airplane Directorate, Aircraft Certification Service.

[FR Doc. 99–1827 Filed 1–27–99; 8:45 am]

BILLING CODE 4910–13–U

DEPARTMENT OF TRANSPORTATION

Federal Aviation Administration

14 CFR Part 39

[Docket No. 99–NM–10–AD; Amendment 39–11014; AD 99–03–02]

RIN 2120–AA64

Airworthiness Directives; McDonnell Douglas Model MD–11 Series Airplanes

AGENCY: Federal Aviation Administration, DOT.

ACTION: Final rule; request for comments.

SUMMARY: This amendment adopts a new airworthiness directive (AD) that is applicable to all McDonnell Douglas Model MD–11 series airplanes. This action requires a one-time inspection to detect discrepancies of certain wiring and insulation in the cockpit and cabin, and repair, if necessary. This amendment is prompted by test results obtained in support of an accident investigation. The actions specified in this AD are intended to prevent electrical arcing of certain wiring, which could cause a fire and/or smoke in the cockpit or cabin.

DATES: Effective February 12, 1999.

Comments for inclusion in the Rules Docket must be received on or before March 29, 1999.

ADDRESSES: Submit comments in triplicate to the Federal Aviation Administration (FAA), Transport Airplane Directorate, ANM–114, Attention: Rules Docket No. 99–NM–10–AD, 1601 Lind Avenue, SW., Renton, Washington 98055–4056.

The information concerning this amendment may be obtained from or examined at the FAA, Transport Airplane Directorate, 1601 Lind Avenue, SW., Renton, Washington; or at the FAA, Transport Airplane Directorate, Los Angeles Aircraft Certification Office, 3960 Paramount Boulevard, Lakewood, California.

FOR FURTHER INFORMATION CONTACT: Brett Portwood, Aerospace Engineer, Systems and Equipment Branch, ANM–130L, FAA, Transport Airplane Directorate, Los Angeles Aircraft Certification Office, 3960 Paramount Boulevard, Lakewood, California 90712–4137; telephone (562) 627–5350; fax (562) 627–5210.

SUPPLEMENTARY INFORMATION: On September 2, 1998, a McDonnell Douglas Model MD–11 series airplane was involved in an accident following takeoff from John F. Kennedy International Airport in Jamaica, New York. The cause of the accident has not been determined.

In support of the subsequent accident investigation, examinations were conducted on several Model MD–11 series airplanes; the examinations focused on the area from the cockpit to station 515 (near the forward doors of the airplane in the forward drop ceiling area). The FAA recently has been informed of the results of these examinations, which revealed chafed, cracked, broken, and cut electrical and bonding wires in several of these areas. These conditions, if not corrected, could result in electrical arcing of wiring and consequent fire and/or smoke in the cockpit or cabin.

Explanation of the Requirements of the Rule

Since an unsafe condition has been identified that is likely to exist or develop on other airplanes of the same type design, this AD is being issued to prevent electrical arcing of wiring, which could cause a fire and/or smoke in the cockpit or cabin. This AD requires accomplishment of a one-time visual inspection to detect discrepancies (including loose wire connections, loose ground wires, broken bonding wires, small wire bending radii, cracked support brackets, and chafed and cracked wire insulation) of the wiring and insulation in the cockpit and overhead drop ceiling panel areas at stations Y=304 through Y=516 and X=−27 left side through X=27 right side above the floor. The inspection is required to be performed in accordance with a method approved by the FAA.

This AD also requires repair of any discrepancy in accordance with Chapter 20, Standard Wiring Practices of the MD–11 Wiring Diagram Manual, dated October 1, 1998.

Further, this AD requires that operators report results of inspection findings (both positive and negative) to the FAA.

Interim Action

This is considered to be interim action. The inspection reports that are required by this AD will enable the manufacturer to obtain better insight into the nature, cause, and extent of the discrepant wiring, and eventually to develop final action to address the unsafe condition. Once final action has been identified, the FAA may consider further rulemaking.

Determination of Rule's Effective Date

Since a situation exists that requires the immediate adoption of this regulation, it is found that notice and opportunity for prior public comment hereon are impracticable, and that good cause exists for making this amendment effective in less than 30 days.

Comments Invited

Although this action is in the form of a final rule that involves requirements affecting flight safety and, thus, was not preceded by notice and an opportunity for public comment, comments are invited on this rule. Interested persons are invited to comment on this rule by submitting such written data, views, or arguments as they may desire. Communications shall identify the Rules Docket number and be submitted in triplicate to the address specified under the caption **ADDRESSES.** All communications received on or before the closing date for comments will be considered, and this rule may be amended in light of the comments received. Factual information that supports the commenter's ideas and suggestions is extremely helpful in evaluating the effectiveness of the AD action and determining whether additional rulemaking action would be needed.

Comments are specifically invited on the overall regulatory, economic, environmental, and energy aspects of the rule that might suggest a need to modify the rule. All comments submitted will be available, both before and after the closing date for comments, in the Rules Docket for examination by interested persons. A report that summarizes each FAA-public contact concerned with the substance of this AD will be filed in the Rules Docket.

Commenters wishing the FAA to acknowledge receipt of their comments submitted in response to this rule must submit a self-addressed, stamped postcard on which the following statement is made: ''Comments to Docket Number 99–NM–10–AD.'' The postcard will be date stamped and returned to the commenter.

Regulatory Impact

The regulations adopted herein will not have substantial direct effects on the States, on the relationship between the national government and the States, or on the distribution of power and responsibilities among the various levels of government. Therefore, in accordance with Executive Order 12612, it is determined that this final rule does not have sufficient federalism implications to warrant the preparation of a Federalism Assessment.

The FAA has determined that this regulation is an emergency regulation that must be issued immediately to correct an unsafe condition in aircraft, and that it is not a ''significant regulatory action'' under Executive Order 12866. It has been determined further that this action involves an emergency regulation under DOT Regulatory Policies and Procedures (44 FR 11034, February 26, 1979). If it is determined that this emergency regulation otherwise would be significant under DOT Regulatory Policies and Procedures, a final regulatory evaluation will be prepared and placed in the Rules Docket. A copy of it, if filed, may be obtained from the Rules Docket at the location provided under the caption **ADDRESSES.**

List of Subjects in 14 CFR Part 39

Air transportation, Aircraft, Aviation safety, Safety.

Adoption of the Amendment

Accordingly, pursuant to the authority delegated to me by the Administrator, the Federal Aviation Administration amends part 39 of the Federal Aviation Regulations (14 CFR part 39) as follows:

PART 39—AIRWORTHINESS DIRECTIVES

1. The authority citation for part 39 continues to read as follows:

Authority: 49 U.S.C. 106(g), 40113, 44701.

§ 39.13 [Amended]

2. Section 39.13 is amended by adding the following new airworthiness directive:

99–03–02 McDonnell Douglas: Amendment 39–11014. Docket 99–NM–10–AD.

Applicability: All Model MD–11 series airplanes, certificated in any category.

Note 1: This AD applies to each airplane identified in the preceding applicability provision, regardless of whether it has been modified, altered, or repaired in the area subject to the requirements of this AD. For airplanes that have been modified, altered, or repaired so that the performance of the requirements of this AD is affected, the owner/operator must request approval for an alternative method of compliance in accordance with paragraph (d) of this AD. The request should include an assessment of the effect of the modification, alteration, or repair on the unsafe condition addressed by this AD; and, if the unsafe condition has not been eliminated, the request should include specific proposed actions to address it.

Compliance: Required as indicated, unless accomplished previously.

To prevent electrical arcing of certain wiring, which could cause a fire and/or smoke in the cockpit or cabin, accomplish the following:

(a) Within 60 days after the effective date of this AD: Perform the one-time visual inspections required by paragraphs (a)(1), (a)(2), and (a)(3) of this AD to detect discrepancies (including loose wire connections, loose ground wires, broken bonding wires, small wire bending radii, cracked support brackets, and chafed and cracked wire insulation); in accordance with a method approved by the Manager, Los Angeles Aircraft Certification Office (ACO), FAA, Transport Airplane Directorate.

(1) Inspect all cabin wiring and insulation, including the wire harness protective wrap if applicable, on and above the forward cabin drop ceiling, from the cockpit bulkhead (at approximately station 392) to the aft edge of the forward drop ceiling (at approximately station 516). And

(2) Inspect all cockpit wiring and insulation, including the wire harness protective wrap if applicable, within the overhead switch panel and overhead circuit breaker panel (at approximately stations 304 through 360). And

(3) Inspect all cockpit wiring and insulation, including the wire harness protective wrap if applicable, in the following areas:

- Aft of the overhead circuit breaker panel (at approximately station 360);
- Forward of the cockpit entry bulkhead (at approximately station 392);
- 16 inches left of centerline (at approximately station X = − 16); and
- Above the top edge of the right clear-view window, including wiring within and outboard of the upper and lower avionics circuit breaker panels.

Note 2: Inspection of wiring within conduits is not required by this AD.

Note 3: Insulation blankets (which hide wiring that is generally routed through conduits) and wire harness protective wrap (including gray sleeving, spiral wrap, and centerline tape) are not required to be removed during the inspection.

(b) If any discrepancy is detected during any inspection required by paragraph (a) of this AD, prior to further flight, repair in accordance with Chapter 20, Standard Wiring Practices of the MD–11 Wiring Diagram Manual, dated October 1, 1998.

(c) Within 10 days after accomplishing the inspections required by paragraph (a) of this AD, submit a report of the inspection results (both positive and negative findings) to the Manager, Los Angeles Aircraft Certification Office, FAA, Transport Airplane Directorate, 3960 Paramount Boulevard, Lakewood, California 90712–4137; fax (562) 627–5210. Information collection requirements contained in this regulation have been approved by the Office of Management and Budget (OMB) under the provisions of the Paperwork Reduction Act of 1980 (44 U.S.C. 3501 *et seq.*) and have been assigned OMB Control Number 2120–0056.

(d) An alternative method of compliance or adjustment of the compliance time that provides an acceptable level of safety may be used if approved by the Manager, Los Angeles ACO. Operators shall submit their requests through an appropriate FAA Principal Maintenance Inspector, who may add comments and then send it to the Manager, Los Angeles ACO.

Note 4: Information concerning the existence of approved alternative methods of compliance with this AD, if any, may be obtained from the Los Angeles ACO.

(e) Special flight permits may be issued in accordance with sections 21.197 and 21.199 of the Federal Aviation Regulations (14 CFR 21.197 and 21.199) to operate the airplane to a location where the requirements of this AD can be accomplished.

(f) This amendment becomes effective on February 12, 1999.

Issued in Renton, Washington, on January 21, 1999.

John J. Hickey,

Acting Manager, Transport Airplane Directorate, Aircraft Certification Service.

[FR Doc. 99–1976 Filed 1–27–99; 8:45 am]

BILLING CODE 4910–13–U

DEPARTMENT OF HEALTH AND HUMAN SERVICES

Food and Drug Administration

21 CFR Part 564

[Docket No. 95N–0313]

Standards for Animal Food and Food Additives in Standardized Animal Food

AGENCY: Food and Drug Administration, HHS.

ACTION: Final rule.

SUMMARY: The Food and Drug Administration (FDA) is amending its regulations to remove its animal food standards regulations. The action is in response to the administration's ''Reinventing Government'' initiative, which seeks to streamline government to ease the burden on regulated industry and consumers, and it is intended to remove unnecessary regulations.

DATES: This final rule becomes effective on March 1, 1999.

FOR FURTHER INFORMATION CONTACT: George Graber, Center for Veterinary Medicine (HFV–220), Food and Drug Administration, 7500 Standish Pl., Rockville, MD 20855, 301–827–6651, E-mail: ggraber@bangate.fda.gov.

SUPPLEMENTARY INFORMATION:

I. Background

In the **Federal Register** of November 25, l996 (61 FR 59845), FDA published a proposed rule that would remove part 564 (21 CFR part 564), Definitions and Standards for Animal Food, of subchapter E, Animal Drugs, Feeds, and Related Products. Subpart A of part 564 contains procedural regulations for establishing standards for animal food, and subpart B contains regulations applicable to food additives included in standardized animal foods.

FDA continues to believe, as stated in the preamble to the proposed rule, that because neither FDA nor the private sector has ever used the procedures in part 564 to develop a regulatory standard, part 564 is unnecessary. Further, should FDA ever receive a request to develop an animal food standard regulation, the agency could determine whether procedural regulations are necessary and issue such procedures through the notice and comment rulemaking process as the standard was being developed.

II. Response to Comments

Forty-two comments were received on the proposed rule. Four comments were from organizations and the remainder from individuals. The majority of comments appear to have been prompted by an ''Action Alert'' (Alert) issued by one organization that states that there is no Federal regulation of animal food. The Alert states that enforcement is inconsistent and that standards for animal nutrition are inadequate.

1. Thirteen comments were identical form letters that repeat virtually the same language contained in the Alert, but concluding with the statement ''Apparently, there is no interest by your department, the FDA, in developing a regulatory standard for animal and food

additives, although there is a need for such standards. Therefore, the current regulation should be eliminated as a part of President Clinton's 'Reinventing Government' initiative.''

2. Twelve comments digress from the issue at hand, to discuss topics such as bovine spongiform encephalopathy or other animal food safety matters that do not relate to part 564.

3. The remaining comments paraphrased the form letter mentioned previously. Many included the erroneous statement that ''At the present there is NO federal regulation of animal food,'' adding that regulation is only at the State level. The comments inaccurately concluded that part 564 provides our only authority to regulate animal foods, implying that in this regulation's absence we have no authority to regulate.

FDA disagrees with comments that suggest removal of part 564 adversely affects the agency's authority to regulate animal food. A misconception of FDA's regulatory authority apparently exists, because the agency has never relied on part 564 for regulation of animal food. FDA's authority under the Federal Food, Drug, and Cosmetic Act (the act), and the regulations under 21 CFR part 501 (labeling), 21 CFR part 502 (common or usual names), 21 CFR part 509 (contaminants), 21 CFR parts 570, 571, and 573 (food additives), 21 CFR part 579 (irradiation), 21 CFR part 582 (generally recognized as safe (GRAS) substances), and 21 CFR part 589 (prohibited substances), provide adequate authority for the needed regulation of animal food formulation and labeling.

The act prohibits the sale of adulterated and misbranded food in interstate commerce. The definition of food relates to food for man or animal, i.e., feed. The act also allows the agency to establish standards of identity or standards of fill as needed. However, there has been no interest or perceived need by the agency or other parties in developing standards under part 564.

In addition to the existing regulations and statute cited previously, FDA and State regulatory authorities recognize the common feed ingredient definitions established by the Association of American Feed Control Officials (AAFCO) with input from FDA. Feed ingredient definitions consist of specifications established to standardize feed ingredients to ensure that the production, sale and use of ingredients will result in safe and effective feeds. AAFCO has also developed standards, such as the AAFCO Dog and Cat Nutrient Profiles and Feeding Protocols, to help ensure that pet foods contain ingredients needed to meet the animals' nutritional requirements. FDA considers these protocols to be acceptable and appropriate for the evaluation of performance characteristics of commercial foods for dogs and cats.

The definitions and standards that AAFCO issues have served as models for State laws and regulations covering feed ingredients and their proper labeling. Because most pet food manufacturers market products in more than one State, those companies are obligated to manufacture and label pet food products to be in compliance with both FDA and State laws. Thus, the agency finds no basis to conclude that removal of part 564 would adversely affect the authority to regulate animal food.

III. Analysis of Impacts

FDA has examined the impacts of the final rule under Executive Order 12866, under the Regulatory Flexibility Act (5 U.S.C. 601–612), and under the Unfunded Mandates Reform Act (Pub. L. 104–4). Executive Order 12866 directs agencies to assess all costs and benefits of available regulatory alternatives and, when regulation is necessary, to select regulatory approaches that maximize net benefits (including potential economic, environmental, public health and safety, and other advantages, and distributive impacts and equity). The Regulatory Flexibility Act requires agencies to examine the economic impact of a rule on small entities. The Unfunded Mandates Reform Act requires agencies to prepare an assessment of anticipated costs and benefits before enacting any rule that may result in an expenditure in any 1 year by State, local and tribal governments, in the aggregate, or by the private sector, of $100 million (adjusted annually for inflation). The agency has reviewed this final rule and has determined that the rule is consistent with the principles set forth in the Executive Order and in these two statutes. FDA finds that the rule will not be a major rule under the Executive Order.

The rule would remove the regulations establishing standards for animal foods, since neither FDA nor the private sector have ever used the procedures for developing a regulatory standard. FDA is taking this action in response to the administration's ''Reinventing Government'' initiative which seeks to remove unnecessary regulations.

FDA, in accordance with the Regulatory Flexibility Act, has considered the effect that this rule will have on small entities, including small businesses, and certifies that the rule will not have a significant economic impact on a substantial number of small entities. FDA has also analyzed this rule in accordance with the Unfunded Mandates Reform Act and determined that the rule will not result in the expenditure by State, local, and tribal Governments, in the aggregate, or by the private sector of $100 million. Therefore, no further analysis is required.

IV. Environmental Impact

The agency has determined under 21 CFR 25.30(h) that this action is of a type that does not individually or cumulatively have a significant effect on the human environment. Therefore, neither an environmental assessment nor an environmental impact statement is required.

V. The Paperwork Reduction Act of 1995

FDA tentatively concludes that this final rule contains no collections of information. Therefore, clearance by the Office of Management and Budget under the Paperwork Reduction Act of 1995 is not required.

List of Subjects in 21 CFR Part 564

Animal foods, Food additives.

Therefore, under the Federal Food, Drug, and Cosmetic Act and under authority delegated to the Commissioner of Food and Drugs, 21 CFR part 564 is removed and reserved.

PART 564—DEFINITIONS AND STANDARDS FOR ANIMAL FOOD

1. Part 564 is removed and reserved.

Dated: January 22, 1999.

William K. Hubbard,

Associate Deputy Commissioner for Policy.

[FR Doc. 99–2057 Filed 1–27–99; 8:45 am]

BILLING CODE 4160–01–F

DEPARTMENT OF JUSTICE

28 CFR Part 0

[AG Order No. 2204–99]

Withdrawal of the Attorney General's Delegation of Gift-Acceptance Authority to the Director of the Bureau of Prisons and the Administrator of the Drug Enforcement Administration

AGENCY: Department of Justice.

ACTION: Final rule.

SUMMARY: This rule eliminates current rules that delegate to the Director of the Bureau of Prisons the Attorney

General's authority to accept gifts made to the Bureau of Prisons, Federal Prisons Industries, and the Commissary Funds, Federal Prisons. This rule also adds language to clarify that delegations to the Administrator of the Drug Enforcement Administration of functions vested in the Attorney General by the Comprehensive Drug Abuse Prevention and Control Act of 1970, as amended, are qualified by the Attorney General's right to reserve authority over any of those functions and to grant some or all of those functions to other officers or employees of the Department of Justice. The purpose of these changes is to reflect the Attorney General's recent delegation of general gift-acceptance authority to the Assistant Attorney General for Administration. This action is being undertaken to promote administrative efficiency.

EFFECTIVE DATE: January 28, 1999.

FOR FURTHER INFORMATION CONTACT: Dorothy L. Foley, Attorney-Advisor, Office of the General Counsel, Justice Management Division, U.S. Department of Justice, (202) 514–3452.

SUPPLEMENTARY INFORMATION: Currently, 28 CFR 0.96(f) delegates to the Director of the Bureau of Prisons the authority vested in the Attorney General, pursuant to 18 U.S.C. 4043, to accept ''gifts or bequests of money for credit to the 'Commissary Funds, Federal Prisons.''' Section 0.96(s) of title 28 of the Code of Federal Regulations delegates to the Director of the Bureau of Prisons the authority vested in the Attorney General pursuant to 18 U.S.C. 4044 ''to accept any form of devise, bequest, gift or donation of money or property for use by the Bureau of Prisons and Federal Prison Industries.''

Section 0.100(b) of title 28 of the Code of Federal Regulations delegates to the Administrator of the Drug Enforcement Administration ''[f]unctions vested in the Attorney General by the Comprehensive Drug Abuse Prevention and Control Act of 1970, as amended* * * and not otherwise specifically assigned or reserved by him.'' 28 CFR 0.100(b). Among the functions assigned to the Attorney General by the Comprehensive Drug Abuse Prevention and Control Act of 1970, as amended, is the authority to ''accept in the name of the Department of Justice any form of devise, bequest, gift or donation where the donor intends to donate property for the purpose of preventing or controlling the abuse of controlled substances.'' 21 U.S.C. 871(c).

Recently-enacted legislation gave the Attorney General general authority to accept gifts on behalf of all components of the Department of Justice. 28 U.S.C. 524(d)(1). The Attorney General has delegated this gift-acceptance authority to the Assistant Attorney General for Administration. Department of Justice Order No. 2400.2 (September 2, 1997). Through this delegation to the Assistant Attorney General for Administration, the Attorney General withdrew all previous delegations of gift-acceptance authority to other components of the Department. This rule reflects the withdrawal of that gift-acceptance authority by removing the inconsistent delegation language of sections 0.96(f) and (s) of title 28 of the Code of Federal Regulations regarding the Director of the Bureau of Prisons and clarifying that the delegation of functions to the Administrator of the Drug Enforcement Administration in section 0.100(b) is qualified by other delegation of those functions by the Attorney General.

Executive Order 12866

This rule has been drafted and reviewed in accordance with Executive Order 12866, section (1)(b), Principles of Regulation. The Department of Justice has determined that this rule is not a regulation or rule subject to review pursuant to Executive Order 12866, section 3(d)(3), and accordingly it has not been reviewed by the Office of Management and Budget.

Unfunded Mandates Reform Act of 1995

This rules makes an administrative change in the Department's internal regulations and will not result in the expenditure by State, local, and tribal governments, in the aggregate, or by the private sector, of $100,000,000 or more in any one year, and it will not significantly or uniquely affect small governments. Therefore, no actions were deemed necessary under the provision of the Unfunded Mandates Reform Act of 1995.

Small Business Regulatory Enforcement Fairness Act of 1996

This rule is not a major rule as defined by the Small Business Regulatory Enforcement Fairness Act of 1996. 5 U.S.C. 804. This rule makes an administrative change in the Department's internal regulations concerning the acceptance of gifts by the Department and will not result in an annual effect on the economy of $100,000,000 or more, a major increase in cost or prices; or significant adverse effects on competition, employment, investment, productivity, or innovation, or on the ability of United States-based companies to compete with foreign-based companies in domestic and export markets.

Regulatory Flexibility Act

The Attorney General, in accordance with the Regulatory Flexibility Act (5 U.S.C. 605(b)), has reviewed this rule and, by approving it, certifies that the rule will not have a significant economic impact on a substantial number of small entities.

Executive Order 12612

This rule will not have substantial direct effects on the States, on the relationship between the national government and the States, or on the distribution of power and responsibilities among the various levels of government. Therefore, in accordance with section 6 of Executive Order 12612, the Department of Justice has determined that this rule does not have sufficient federalism implications to warrant the preparation of a Federalism Assessment.

Executive Order 12988

This rule meets the applicable standards provided in section 3(a) and (b)(2) of Executive Order 12988.

Administrative Procedure Act

This rule was not published for public comment because it pertains to a matter of internal Department of Justice management.

List of Subjects in 28 CFR Part 0

Authority delegations (Government agencies); Government employees; Organization and Functions (Government Agencies); Whistleblowing.

Accordingly, Part 0 of title 28 of the Code of Federal Regulation is amended as follows:

PART 0—ORGANIZATION OF THE DEPARTMENT OF JUSTICE

1. The authority citation for Part 0 continues to read as follows:

Authority: 5 U.S.C. 301; 28 U.S.C. 509, 510, 515–519.

2. In § 0.96 of Subpart Q of 28 CFR, remove paragraphs (f) and (s) and redesignate paragraphs (g) through (v) as paragraphs (f) through (t).

3. In § 0.100 of Subpart R of 28 CFR, revise the first sentence of paragraph (b) to read as follows:

§ 0.100 General functions.

* * * * *

(b) Except where the Attorney General has delegated authority to another Department of Justice official to exercise such functions, functions vested in the Attorney General by the Comprehensive

Drug Abuse Prevention and Control Act of 1970, as amended. * * *

* * * * *

Dated: January 8, 1999.

Janet Reno,

Attorney General.

[FR Doc. 99–1900 Filed 1–27–99; 8:45 am]

BILLING CODE 4410–AR–M

ENVIRONMENTAL PROTECTION AGENCY

40 CFR Part 52

[TX–71–1–7311a; FRL–6222–1]

Approval and Promulgation of Air Quality Implementation Plans; Texas; Multiple Air Contaminant Sources or Properties

AGENCY: Environmental Protection Agency (EPA).

ACTION: Direct final rule.

SUMMARY: This action approves the State Implementation Plan (SIP) revision to 30 TAC Chapter 101, Section 101.2(b) concerning Multiple Air Contaminant Sources. The SIP revision was submitted by the Governor to EPA on January 10, 1996. The revision to the rule eliminates the 50,000 population limitation and is now applicable statewide to all counties regardless of population. The revision also limits the use of the provision to a property under the control of a single entity which has been or will be divided and placed under the control of separate entities, creating a new property line configuration for properties operated, or intended to be operated, as an integrated plant or plants where individual facilities are owned by separate entities, but all facilities are under the control of a single entity. The approval of these Texas SIP revisions make the revisions federally enforceable.

DATES: This rule is effective on March 29, 1999 without further notice, unless EPA receives adverse comment by March 1, 1999. If we receive such comment, we will publish a timely withdrawal in the **Federal Register** informing the public that this rule will not take effect.

ADDRESSES: Written comments on this action should be addressed to Mr. Thomas Diggs, Chief, Air Planning Section (6PD–L), at the EPA Region 6 Office listed below. Copies of the documents relevant to this action are available for public inspection during normal business hours at the following locations. Interested persons wanting to examine these documents should make an appointment with the appropriate office at least two working days in advance.

Environmental Protection Agency, Region 6, Air Planning Section (6PD–L), Multimedia Planning and Permitting Division, 1445 Ross Avenue, Suite 700, Dallas, Texas 75202–2733.

Texas Natural Resource Conservation Commission (TNRCC), Office of Air Quality, 12100 Park Circle, Austin, Texas 78753.

Documents which are incorporated by reference are available for public inspection at the Air and Radiation Docket and Information Center, Environmental Protection Agency, 401 M Street, SW.,Washington, DC 20460.

FOR FURTHER INFORMATION CONTACT: Mr. Ken Boyce, Air Planning Section (6PD–L), Environmental Protection Agency, 1445 Ross Avenue, Suite 700, Dallas, Texas 75202, telephone: (214) 665–7259.

SUPPLEMENTARY INFORMATION:

I. Background

The original 1967 regulation regarding multiple air contaminant sources allowed two or more property holders in an area to petition to have their properties designated as a single entity for the purpose of controlling air emissions. The rule applies to properties which are contiguous except for intersecting roads, railroads, rights-of-way, canals, and watercourses which are considered a part of the area for purposes of this provision. The rule required that the petition describe the manner in which the combined emissions will be administered and it shall name the responsible party or parties. In 1972, the regulation was limited in applicability to counties with a population less than 50,000 as determined by the most recent census.

The amendment to the rule eliminates the 50,000 population limitation and it limits the use of the provision to properties under the control of a single entity. The proposal would require the parties dividing ownership to establish which of them is responsible for emissions related impacts. Also, the definition of an eligible facility is further narrowed to exclude property previously divided by a canal, bayou, waterway, or public right-of-way.

II. Analysis of State Submission

The EPA had no adverse comments regarding the proposed rule change, provided that each petition be accompanied by a statement indicating ownership, control, and clarified responsibility. In its response to comments, Texas agreed that the petition would clearly indicate ownership, control, and responsibility.

III. Final Action

The EPA is approving the revisions to the Texas SIP regarding Multiple Air Contaminant Sources or Properties. The EPA is publishing this rule without prior proposal because the Agency views this as a noncontroversial amendment and anticipates no adverse comments. However, the proposed section of this **Federal Register** publication, EPA is publishing a separate document that will serve as the proposal to approve the SIP revision should relevant adverse comments be filed. This rule will be effective on March 29, 1999 unless EPA receives adverse comment by March 1, 1999. If adverse or critical comments are received, EPA will publish a timely withdrawal of the direct final rule in the **Federal Register** and inform the public that the rule will not take effect.

If EPA receives such comments, this action will be withdrawn before the effective date by publishing a subsequent action that will withdraw the final action. All public comments received will be addressed in a subsequent final rule based on the proposed rule. The EPA will not institute a second comment period on this action. Any parties interested in commenting on this action should do so at this time. If no such comments are received, the public is advised that this action will be effective March 29, 1999 and no further action will be taken on the proposed rule.

Nothing in this action should be construed as permitting or allowing or establishing a precedent for any future request for revision to any SIP. Each request for revision to the SIP shall be considered separately in light of specific, technical, economic, and environmental factors and in relation to relevant statutory and regulatory requirements.

IV. Administrative Requirements

A. Executive Orders (E.O.) 12866 and 13045

The Office of Management and Budget has exempted this regulatory action from review under Executive Order E.O. 12866, entitled ''Regulatory Planning Review.''

B. Executive Order 12875

Under Executive Order 12875, EPA may not issue a regulation that is not required by statute and that creates a mandate upon a State, local or tribal government, unless the Federal government provides the funds

necessary to pay the direct compliance costs incurred by those governments. If the mandate is unfunded, EPA must provide to the Office of Management and Budget a description of the extent of EPA's prior consultation with representatives of affected state, local, and tribal governments, the nature of their concerns, copies of written communications from the governments, and a statement supporting the need to issue the regulation. In addition, E.O. 12875 requires EPA to develop an effective process permitting elected officials and other representatives of state, local, and tribal governments ''to provide meaningful and timely input in the development of regulatory proposals containing significant unfunded mandates.''

This rule does not create a mandate on state, local or tribal governments. The rule does not impose any enforceable duties on these entities. Accordingly, the requirements of section 3(b) of E.O. 13084 do not apply to this rule.

C. Executive Order 13045

Protection of Children From Environmental Health Risks and Safety Risks (62 FR 19885, April 23, 1997), applies to any rule that: (1) Is determined to be ''economically significant'' as defined under Executive Order 12866, and (2) concerns an environmental health or safety risk that EPA has reason to believe may have a disproportionate effect on children. If the regulatory action meets both criteria, the Agency must evaluate the environmental health or safety effects of the planned rule on children, and explain why the planned regulation is preferable to other potentially effective and reasonably feasible alternatives considered by the Agency.

This rule is not subject to Executive Order 13045 because it does not involve decisions intended to mitigate environmental health or safety risks.

D. Executive Order 13084

Under Executive Order 13084, EPA may not issue a regulation that is not required by statute, that significantly or uniquely affects the communities of Indian tribal governments, and that imposes substantial direct compliance costs on those communities, unless the Federal government provides the funds necessary to pay the direct compliance costs incurred by the tribal governments, or EPA consults with those governments. If EPA complies by consulting, Executive Order 13084 requires EPA to provide to the Office of Management and Budget, in a separately identified section of the preamble to the rule, a description of the extent of EPA's prior consultation with representatives of affected tribal governments, a summary of the nature of their concerns, and a statement supporting the need to issue the regulation. In addition, Executive Order 13084 requires EPA to develop an effective process permitting elected officials and other representatives of Indian tribal governments ''to provide meaningful and timely input in the development of regulatory policies on matters that significantly or uniquely affect their communities.''

Today's rule does not significantly or uniquely affect the communities of Indian tribal governments. This action does not involve or impose any requirements that affect Indian Tribes. Accordingly, the requirements of section 3(b) of Executive Order 13084 do not apply to this rule.

E. Regulatory Flexibility Act

The Regulatory Flexibility Act (RFA) generally requires an agency to conduct a regulatory flexibility analysis of any rule subject to notice and comment rulemaking requirements unless the agency certifies that the rule will not have a significant economic impact on a substantial number of small entities. Small entities include small businesses, small not-for-profit enterprises, and small governmental jurisdictions. This final rule will not have a significant impact on a substantial number of small entities because SIP approvals under section 110 and subchapter I, part D of the Act do not create any new requirements but simply approve requirements that the State is already imposing. Therefore, because the Federal SIP approval does not create any new requirements, I certify that this action will not have a significant economic impact on a substantial number of small entities. Moreover, due to the nature of the Federal-State relationship under the Act, preparation of flexibility analysis would constitute Federal inquiry into the economic reasonableness of state action. The Act forbids EPA to base its actions concerning SIPs on such grounds. *Union Electric Co.,* v. *U.S. EPA,* 427 U.S. 246, 255–66 (1976); 42 U.S.C. 7410(a)(2).

F. Unfunded Mandates

Under Section 202 of the Unfunded Mandates Reform Act of 1995, signed into law on March 22, 1995, EPA must prepare a budgetary impact statement to accompany any proposed or final rule that includes a Federal mandate that may result in estimated annual costs to State, local, or tribal governments in the aggregate; or to private sector, of $100 million or more. Under Section 205, EPA must select the most cost-effective and least burdensome alternative that achieves the objectives of the rule and is consistent with statutory requirements. Section 203 requires EPA to establish a plan for informing and advising any small governments that may be significantly or uniquely impacted by the rule.

The EPA has determined that the approval action promulgated does not include a Federal mandate that may result in estimated annual costs of $100 million or more to either State, local, or tribal governments in the aggregate, or to the private sector. This Federal action approves pre-existing requirements under State or local law, and imposes no new requirements. Accordingly, no additional costs to State, local, or tribal governments, or to the private sector, result from this action.

G. Submission to Congress and the Comptroller General

The Congressional Review Act, 5 U.S.C. 801 *et seq.*, as added by the Small Business Regulatory Enforcement Fairness Act of 1996, generally provides that before a rule may take effect, the agency promulgating the rule must submit a rule report, which includes a copy of the rule, to each House of the Congress and to the Comptroller General of the United States. The EPA will submit a report containing this rule and other required information to the U.S. Senate, the U.S. House of Representatives, and the Comptroller General of the United States prior to publication of the rule in the **Federal Register**. This rule is not a ''major'' rule as defined by 5 U.S.C. 804(2).

H. Petitions for Judicial Review

Under section 307(b)(1) of the Act, petitions for judicial review of this action must be filed in the United States Court of Appeals for the appropriate circuit by March 29, 1999. Filing a petition for reconsideration by the Administrator of this final rule does not affect the finality of this rule for the purposes of judicial review nor does it extend the time within which a petition for judicial review may be filed, and shall not postpone the effectiveness of such rule or action. This action may not be challenged later in proceedings to enforce its requirements. (See section 307(b)(2).)

List of Subjects in 40 CFR Part 52

Environmental protection, Air pollution control, Carbon monoxide, Hydrocarbons, Incorporation by reference, Intergovernmental relations,

Lead, Nitrogen dioxide, Ozone, Particulate matter, Reporting and record keeping requirements, Sulfur oxides, Volatile organic compounds.

Dated: December 18, 1998.

Jerry Clifford,

Acting Regional Administrator, Region 6.

Part 52, chapter I, title 40 of the Code of Federal Regulations is amended as follows:

PART 52—[AMENDED]

1. The authority citation for part 52 continues to read as follows:

Authority: 42 U.S.C. 7401 *et seq.*

Subpart SS—Texas

2. Section 52.2270 is amended by adding paragraph (c)(112) to read as follows:

§ 52.2270 Identification of plan.

* * * * *

(c) * * *

(112) Revision to the Texas State Implementation Plan submitted by the Governor on January 10, 1996.

(i) Incorporation by reference.

(A) Texas Natural Resource Conservation Commission (TNRCC) General Rules (30 TAC Chapter 101), Section 101.2(b), adopted by TNRCC on December 13, 1995, effective January 8, 1996.

(B) TNRCC Docket No. 95–0849–RUL issued December 13, 1995, for adoption of amendments to 30 TAC Chapter 101, Section 101.2(b), regarding Multiple Air Contaminant Sources or Properties and revision to the SIP.

(ii) Additional materials.

A letter from the Governor of Texas dated January 10, 1996, submitting revisions to 30 TAC Chapter 101, Section 101.2(b), for approval as a revision to the SIP.

[FR Doc. 99–1912 Filed 1–27–99; 8:45 am]

BILLING CODE 6560–50–P

ENVIRONMENTAL PROTECTION AGENCY

40 CFR Part 63

[FRL–6222–7]

Approval of Section 112(l) Authority for Hazardous Air Pollutants; Perchloroethylene Air Emission Standards for Dry Cleaning Facilities; State of California; Yolo-Solano Air Quality Management District

AGENCY: Environmental Protection Agency (EPA).

ACTION: Direct final rule.

SUMMARY: Pursuant to section 112(l) of the Clean Air Act (CAA) and through the California Air Resources Board, the Yolo-Solano Air Quality Management District (YSAQMD) requested approval to implement and enforce its ''Rule 9.7: Perchloroethylene Dry Cleaning Operations'' (Rule 9.7) in place of the ''National Perchloroethylene Air Emission Standards for Dry Cleaning Facilities'' (dry cleaning NESHAP) for area sources under YSAQMD's jurisdiction. The Environmental Protection Agency (EPA) has reviewed this request and has found that it satisfies all of the requirements necessary to qualify for approval. Thus, EPA is hereby granting YSAQMD the authority to implement and enforce Rule 9.7 in place of the dry cleaning NESHAP for area sources under YSAQMD's jurisdiction.

DATES: This rule is effective on March 29, 1999 without further notice, unless EPA receives adverse comments by March 1, 1999. If EPA receives such comment, then it will publish a timely withdrawal in the Federal Register informing the public that this rule will not take effect. The incorporation by reference of certain publications listed in the regulations is approved by the Director of the Federal Register as of March 29, 1999.

ADDRESSES: Written comments must be submitted to Andrew Steckel at the EPA Region IX office listed below. Copies of YSAQMD's request for approval are available for public inspection at the following locations:

U.S. Environmental Protection Agency, Region IX, Rulemaking Office (AIR–4), Air Division, 75 Hawthorne Street, San Francisco, California 94105–3901. Docket # A–96–25.

California Air Resources Board, Stationary Source Division, 2020 ''L'' Street, P.O. Box 2815, Sacramento, California 95812–2815.

Yolo-Solano Air Quality Management District, 1947 Galileo Court, Suite 103, Davis, California 95616.

FOR FURTHER INFORMATION CONTACT: Mae Wang, Rulemaking Office (AIR–4), Air Division, U.S. Environmental Protection Agency, Region IX, 75 Hawthorne Street, San Francisco, California 94105–3901, (415) 744–1200.

SUPPLEMENTARY INFORMATION:

I. Background

On September 22, 1993, the Environmental Protection Agency (EPA) promulgated the National Emission Standards for Hazardous Air Pollutants (NESHAP) for perchloroethylene dry cleaning facilities (*see* 58 FR 49354), which was codified in 40 CFR Part 63, Subpart M, ''National Perchloroethylene Air Emission Standards for Dry Cleaning Facilities'' (dry cleaning NESHAP). On May 21, 1996, EPA approved the California Air Resources Board's (CARB) request to implement and enforce section 93109 of Title 17 of the California Code of Regulations, ''Airborne Toxic Control Measure for Emissions of Perchloroethylene from Dry Cleaning Operations'' (dry cleaning ATCM), in place of the dry cleaning NESHAP for area sources (*see* 61 FR 25397). This approval became effective on June 20, 1996.

Thus, under Federal law, from September 22, 1993, to June 20, 1996, all dry cleaning facilities located within the jurisdiction of the Yolo-Solano Air Quality Management District (YSAQMD) that used perchloroethylene were subject to and required to comply with the dry cleaning NESHAP. Since June 20, 1996, all such dry cleaning facilities that also qualify as area sources are subject to the Federally-approved dry cleaning ATCM; major sources, as defined by the dry cleaning NESHAP, remain subject to the dry cleaning NESHAP and the Clean Air Act (CAA) Title V operating permit program.

On April 25, 1997, EPA received, through CARB, YSAQMD's request for approval to implement and enforce its ''Rule 9.7: Perchloroethylene Dry Cleaning Operations'' (Rule 9.7), as the Federally-enforceable standard for area sources under YSAQMD's jurisdiction. YSAQMD's request, however, does not include the authority to determine equivalent emission control technology for dry cleaning facilities in place of 40 CFR 63.325. On November 14, 1997, YSAQMD withdrew its request to make revisions to Rule 9.7. YSAQMD subsequently revised Rule 9.7 on November 13, 1998, and resubmitted the rule on December 21, 1998, for EPA's approval.

II. EPA Action

A. YSAQMD's Dry Cleaning Rule

Under CAA section 112(l), EPA may approve state or local rules or programs to be implemented and enforced in place of certain otherwise applicable CAA section 112 Federal rules, emission standards, or requirements. The Federal regulations governing EPA's approval of state and local rules or programs under section 112(l) are located at 40 CFR part 63, Subpart E (*see* 58 FR 62262, dated November 26, 1993). Under these regulations, a local air pollution control agency has the option to request EPA's approval to substitute a local rule for the applicable Federal rule. Upon approval, the local agency is given the authority to implement and enforce its rule in

place of the otherwise applicable Federal rule. To receive EPA approval using this option, the requirements of 40 CFR 63.91 and 63.93 must be met.

After reviewing the request for approval of YSAQMD's Rule 9.7, EPA has determined that this request meets all the requirements necessary to qualify for approval under CAA section 112(l) and 40 CFR 63.91 and 63.93. Accordingly, with the exception of the dry cleaning NESHAP provisions discussed in sections II.A.1 and II.A.2 below, as of the effective date of this action, YSAQMD's Rule 9.7 is the Federally-enforceable standard for area sources under YSAQMD's jurisdiction. This rule will be enforceable by the EPA and citizens under the CAA. Although YSAQMD now has primary implementation and enforcement responsibility, EPA retains the right, pursuant to CAA section 112(l)(7), to enforce any applicable emission standard or requirement under CAA section 112.

1. Major Dry Cleaning Sources

Under the dry cleaning NESHAP, dry cleaning facilities are divided between major sources and area sources. YSAQMD's request for approval included only those provisions of the dry cleaning NESHAP that apply to area sources. Thus, dry cleaning facilities using perchloroethylene that qualify as major sources, as defined by the dry cleaning NESHAP, remain subject to the dry cleaning NESHAP and the CAA Title V operating permit program.

2. Authority To Determine Equivalent Emission Control Technology for Dry Cleaning Facilities

Under the dry cleaning NESHAP, any person may petition the EPA Administrator for a determination that the use of certain equipment or procedures is equivalent to the standards contained in the dry cleaning NESHAP (*see* 40 CFR 63.325). In its request, YSAQMD did not seek approval for the provisions in Rule 9.7 that would allow for the use of alternative emission control technology without previous approval from EPA (i.e., Rule 9.7 sections 216, 301.3.a(v), 301.3.b(ii)(c), and 502). A source seeking permission to use an alternative means of emission limitation under CAA section 112(h)(3) must receive approval, after notice and opportunity for comment, from EPA before using such alternative means of emission limitation for the purpose of complying with CAA section 112.

B. California's Authorities To Implement and Enforce CAA Section 112 Standards

1. Penalty Authorities

As part of its request for approval of the dry cleaning ATCM, CARB submitted a finding by California's Attorney General stating that ''State law provides civil and criminal enforcement authority consistent with [40 CFR] 63.91(b)(1)(i), 63.91(b)(6)(i), and 70.11, including authority to recover penalties and fines in a maximum amount of not less than $10,000 per day *per violation* * * *'' [emphasis added]. In accordance with this finding, EPA understands that the California Attorney General interprets section 39674 and the applicable sections of Division 26, Part 4, Chapter 4, Article 3 (''Penalties'') of the California Health and Safety Code as allowing the collection of penalties for multiple violations per day. In addition, EPA also understands that the California Attorney General interprets section 42400(c)(2) of the California Health and Safety Code as allowing for, among other things, criminal penalties for knowingly rendering inaccurate any monitoring *method* required by a toxic air contaminant rule, regulation, or permit.

As stated in section II.A above, EPA retains the right, pursuant to CAA section 112(l)(7), to enforce any applicable emission standard or requirement under CAA section 112, including the authority to seek civil and criminal penalties up to the maximum amounts specified in CAA section 113.

2. Variances

Division 26, Part 4, Chapter 4, Articles 2 and 2.5 of the California Health and Safety Code provide for the granting of variances under certain circumstances. EPA regards these provisions as wholly external to YSAQMD's request for approval to implement and enforce a CAA section 112 program or rule and, consequently, is proposing to take no action on these provisions of state or local law. EPA does not recognize the ability of a state or local agency who has received delegation of a CAA section 112 program or rule to grant relief from the duty to comply with such Federally-enforceable program or rule, except where such relief is granted in accordance with procedures allowed under CAA section 112. As stated above, EPA retains the right, pursuant to CAA section 112(l)(7), and citizens retain the right, pursuant to CAA section 304, to enforce any applicable emission standard or requirement under CAA section 112.

Similarly, section 39666(f) of the California Health and Safety Code allows local agencies to approve alternative methods from those required in the ATCMs, but only as long as such approvals are consistent with the CAA. As mentioned in section II.A.2 above, a source seeking permission to use an alternative means of emission limitation under CAA section 112 must also receive approval, after notice and opportunity for comment, from EPA before using such alternative means of emission limitation for the purpose of complying with CAA section 112.

III. Administrative Requirements

A. Executive Order 12866

The Office of Management and Budget has exempted this regulatory action from Executive Order (E.O.) 12866, entitled ''Regulatory Planning and Review.''

B. Executive Order 12875

Under E.O. 12875, EPA may not issue a regulation that is not required by statute and that creates a mandate upon a state, local, or tribal government, unless the Federal government provides the funds necessary to pay the direct compliance costs incurred by those governments. If the mandate is unfunded, EPA must provide to the Office of Management and Budget a description of the extent of EPA's prior consultation with representatives of affected state, local, and tribal governments, the nature of their concerns, copies of written communications from the governments, and a statement supporting the need to issue the regulation. In addition, E.O. 12875 requires EPA to develop an effective process permitting elected officials and other representatives of state, local, and tribal governments ''to provide meaningful and timely input in the development of regulatory proposals containing significant unfunded mandates.''

Today's rule does not create a mandate on state, local or tribal governments. Accordingly, the requirements of section 1(a) of E.O. 12875 do not apply to this rule.

C. Executive Order 13045

Protection of Children from Environmental Health Risks and Safety Risks (62 FR 19885, April 23, 1997), applies to any rule that: (1) Is determined to be ''economically significant'' as defined under E.O. 12866, and (2) concerns an environmental health or safety risk that EPA has reason to believe may have a disproportionate effect on children. If

the regulatory action meets both criteria, the Agency must evaluate the environmental health or safety effects of the planned rule on children, and explain why the planned regulation is preferable to other potentially effective and reasonably feasible alternatives considered by the Agency.

This rule is not subject to E.O. 13045 because it does not involve decisions intended to mitigate environmental health or safety risks.

D. Executive Order 13084

Under E.O. 13084, EPA may not issue a regulation that is not required by statute, that significantly affects or uniquely affects the communities of Indian tribal governments, and that imposes substantial direct compliance costs on those communities, unless the Federal government provides the funds necessary to pay the direct compliance costs incurred by the tribal governments. If the mandate is unfunded, EPA must provide to the Office of Management and Budget, in a separately identified section of the preamble to the rule, a description of the extent of EPA's prior consultation with representatives of affected tribal governments, a summary of the nature of their concerns, and a statement supporting the need to issue the regulation. In addition, Executive Order 13084 requires EPA to develop an effective process permitting elected and other representatives of Indian tribal governments ''to provide meaningful and timely input in the development of regulatory policies on matters that significantly or uniquely affect their communities.''

Today's rule does not significantly or uniquely affect the communities of Indian tribal governments. Accordingly, the requirements of section 3(b) of E.O. 13084 do not apply to this rule.

E. Regulatory Flexibility Act

The Regulatory Flexibility Act (RFA) generally requires an agency to conduct a regulatory flexibility analysis of any rule subject to notice and comment rulemaking requirements unless the agency certifies that the rule will not have a significant economic impact on a substantial number of small entities. Small entities include small businesses, small not-for-profit enterprises, and small governmental jurisdictions. This final rule will not have a significant impact on a substantial number of small entities because approvals under 40 CFR 63.93 do not create any new requirements but simply approve requirements that the State is already imposing. Therefore, because this approval does not create any new requirements, I certify that this action will not have a significant economic impact on a substantial number of small entities.

F. Unfunded Mandates

Under Section 202 of the Unfunded Mandates Reform Act of 1995 (''Unfunded Mandates Act''), signed into law on March 22, 1995, EPA must prepare a budgetary impact statement to accompany any proposed or final rule that includes a Federal mandate that may result in estimated annual costs to state, local, or tribal governments in the aggregate, or to private sector, of $100 million or more. Under Section 205, EPA must select the most cost-effective and least burdensome alternative that achieves the objectives of the rule and is consistent with statutory requirements. Section 203 requires EPA to establish a plan for informing and advising any small governments that may be significantly or uniquely impacted by the rule.

EPA has determined that the approval action promulgated does not include a Federal mandate that may result in estimated annual costs of $100 million or more to either state, local, or tribal governments in the aggregate, or to the private sector. This Federal action approves pre-existing requirements under state or local law, and imposes no new requirements. Accordingly, no additional costs to state, local, or tribal governments, or to the private sector, result from this action.

G. Submission to Congress and the Comptroller General

The Congressional Review Act, 5 U.S.C. 801 *et seq.*, as added by the Small Business Regulatory Enforcement Fairness Act of 1996, generally provides that before a rule may take effect, the agency promulgating the rule must submit a rule report, which includes a copy of the rule, to each House of the Congress and to the Comptroller General of the United States. EPA will submit a report containing this rule and other required information to the U.S. Senate, the U.S. House of Representatives, and the Comptroller General of the United States prior to publication of the rule in the **Federal Register**. This rule is not a ''major'' rule as defined by 5 U.S.C. 804(2).

H. Petitions for Judicial Review

Under section 307(b)(1) of the Clean Air Act, petitions for judicial review of this action must be filed in the United States Court of Appeals for the appropriate circuit by March 29, 1999. Filing a petition for reconsideration by the Administrator of this final rule does not affect the finality of this rule for the purposes of judicial review nor does it extend the time within which a petition for judicial review may be filed, and shall not postpone the effectiveness of such rule or action. This action may not be challenged later in proceedings to enforce its requirements (see section 307(b)(2)).

List of Subjects in 40 CFR Part 63

Administrative practice and procedure, Air pollution control, Hazardous substances, Incorporation by reference, Intergovernmental relations, Reporting and recordkeeping requirements.

Authority: This action is issued under the authority of section 112 of the Clean Air Act, as amended, 42 U.S.C. section 7412.

Dated: January 11, 1999.

Felicia Marcus,

Regional Administrator, Region IX.

Title 40, chapter I, part 63 of the Code of Federal Regulations is amended as follows:

PART 63—[AMENDED]

1. The authority citation for Part 63 continues to read as follows:

Authority: 42 U.S.C. 7401, *et seq.*

2. Section 63.14 is amended by revising paragraph (d)(1) to read as follows:

§ 63.14 Incorporation by Reference

* * * * *

(d) * * *

(1) *California Regulatory Requirements Applicable to the Air Toxics Program*, January 5, 1999, IBR approved for § 63.99(a)(5)(ii) of subpart E of this part.

Subpart E—Approval of State Programs and Delegation of Federal Authorities

3. Section 63.99 is amended by revising paragraph (a)(5)(ii) introductory text, revising paragraph (a)(5)(ii)(A) introductory text, revising the first sentence of paragraph (a)(5)(ii)(A)(*1*)(*i*), revising the first sentence of paragraph (a)(5)(ii)(B)(*1*)(*i*s), and adding paragraph (a)(5)(ii)(D), to read as follows:

§ 63.99 Delegated Federal Authorities

(a) * * *

(5) * * *

(ii) Affected sources must comply with the *California Regulatory Requirements Applicable to the Air Toxics Program*, January 5, 1999 (incorporated by reference as specified in § 63.14) as described as follows:

(A) The material incorporated in Chapter 1 of the *California Regulatory*

Requirements Applicable to the Air Toxics Program (California Code of Regulations Title 17, section 93109) pertains to the perchloroethylene dry cleaning source category in the State of California, and has been approved under the procedures in § 63.93 to be implemented and enforced in place of subpart M—National Perchloroethylene Air Emission Standards for Dry Cleaning Facilities, as it applies to area sources only, as defined in § 63.320(h).

(*1*) * * *

(*i*) California is not delegated the Administrator's authority to implement and enforce California Code of Regulations Title 17, section 93109, in lieu of those provisions of subpart M which apply to major sources, as defined in § 63.320(g). * * *

(*ii*) * * *

(B) * * *

(*1*) * * *

(*i*) San Luis Obispo County Air Pollution Control District is not delegated the Administrator's authority to implement and enforce Rule 432 in lieu of those provisions of subpart M which apply to major sources as defined in § 63.320(g). * * *

(*ii*) * * *

(C) * * *

(D) The material incorporated in Chapter 4 of the *California Regulatory Requirements Applicable to the Air Toxics Program* (Yolo-Solano Air Quality Management District Rule 9.7) pertains to the perchloroethylene dry cleaning source category in the Yolo-Solano Air Quality Management District, and has been approved under the procedures in § 63.93 to be implemented and enforced in place of subpart M—National Perchloroethylene Air Emission Standards for Dry Cleaning Facilities, as it applies to area sources only, as defined in § 63.320(h).

(*1*) Authorities not delegated.

(*i*) Yolo-Solano Air Quality Management District is not delegated the Administrator's authority to implement and enforce Rule 9.7 in lieu of those provisions of subpart M which apply to major sources, as defined in § 63.320(g). Dry cleaning facilities which are major sources remain subject to subpart M.

(*ii*) Yolo-Solano Air Quality Management District is not delegated the Administrator's authority of § 63.325 to determine equivalency of emissions control technologies. Any source seeking permission to use an alternative means of emission limitation, under sections 216, 301.3.a(v), 301.3.b(ii)(c), and 502 of Rule 9.7, must also receive approval from the Administrator before using such alternative means of emission limitation for the purpose of complying with section 112.

* * * *

[FR Doc. 99–1910 Filed 1–27–99; 8:45 am]

BILLING CODE 6560–50–P

ENVIRONMENTAL PROTECTION AGENCY

40 CFR Part 180

[OPP–300778; FRL 6053–8]

RIN 2070–AB78

Diflufenzopyr; Pesticide Tolerance

AGENCY: Environmental Protection Agency (EPA).

ACTION: Final rule.

SUMMARY: This regulation establishes a tolerance for combined residues of diflufenzopyr, 2-(1-[([3,5-difluorophenylamino]carbonyl)-hydrazono]ethyl)-3-pyridinecarboxylic acid, and its metabolites convertible to M1 (8-methylpyrido[2,3-*d*]pyridazin-5(6*H*)-one) in or on field corn stover, forage and grain. BASF Corporation requested this tolerance under the Federal Food, Drug, and Cosmetic Act (FFDCA), as amended by the Food Quality Protection Act of 1996 (Pub. L. 104–170).

DATES: This regulation is effective January 28, 1999. Objections and requests for hearings must be received by EPA on or before March 29, 1999.

ADDRESSES: Written objections and hearing requests, identified by the docket control number, [OPP–300778], must be submitted to: Hearing Clerk (1900), Environmental Protection Agency, Rm. M3708, 401 M St., SW., Washington, DC 20460. Fees accompanying objections and hearing requests shall be labeled ''Tolerance Petition Fees'' and forwarded to: EPA Headquarters Accounting Operations Branch, OPP (Tolerance Fees), P.O. Box 360277M, Pittsburgh, PA 15251. A copy of any objections and hearing requests filed with the Hearing Clerk identified by the docket control number, [OPP–300778], must also be submitted to: Public Information and Records Integrity Branch, Information Resources and Services Division (7502C), Office of Pesticide Programs, Environmental Protection Agency, 401 M St., SW., Washington, DC 20460. In person, bring a copy of objections and hearing requests to Rm. 119, Crystal Mall #2, 1921 Jefferson Davis Hwy., Arlington, VA.

A copy of objections and hearing requests filed with the Hearing Clerk may also be submitted electronically by sending electronic mail (e-mail) to: opp-docket@epamail.epa.gov. Copies of objections and hearing requests must be submitted as an ASCII file avoiding the use of special characters and any form of encryption. Copies of objections and hearing requests will also be accepted on disks in WordPerfect 5.1/6.1 or ASCII file format. All copies of objections and hearing requests in electronic form must be identified by the docket control number [OPP–300778]. No Confidential Business Information (CBI) should be submitted through e-mail. Electronic copies of objections and hearing requests on this rule may be filed online at many Federal Depository Libraries.

FOR FURTHER INFORMATION CONTACT: By mail: Joanne I. Miller, Registration Division (7505C), Office of Pesticide Programs, Environmental Protection Agency, 401 M St., SW., Washington, DC 20460. Office location, telephone number, and e-mail address: Crystal Mall #2, 1921 Jefferson Davis Hwy., Arlington, VA, (703) 305–6224; e-mail: miller.joanne@epamail.epa.gov.

SUPPLEMENTARY INFORMATION: In the **Federal Register** of November 21, 1997, (62 FR 62304) (FRL 5755–4), EPA, issued a notice pursuant to section 408 of the Federal Food, Drug, and Cosmetic Act (FFDCA), 21 U.S.C. 346a(e) announcing the filing of a pesticide petition (PP) for tolerance by BASF Corporation, P.O. Box 13528, Research Triangle Park, North Carolina 27709. This notice included a summary of the petition prepared by BASF Corporation, the registrant. There were no comments received in response to the notice of filing.

The petition requested that 40 CFR part 180 be amended by establishing tolerances for combined residues of the herbicide diflufenzopyr, 2-(1-[([3,5-difluorophenylamino]carbonyl)-hydrazono]ethyl)-3-pyridinecarboxylic acid, and its metabolites convertible to M1, (8-methylpyrido[2,3-*d*]pyridazin-5(6*H*)-one), in or on field corn fodder (stover), forage and grain at 0.05 part per million (ppm). Note that the scientific assessments relevant to establishing these tolerances for diflufenzopyr were conducted jointly between EPA and the Pest Management Regulatory Agency (PMRA) of Canada as a project under the North American Free Trade Agreement (NAFTA) and the Canadian United States Trade Agreement (CUSTA). Diflufenzopyr qualified as a candidate for such a program due to its classification as a reduced risk pesticide.

I. Risk Assessment and Statutory Findings

Section 408(b)(2)(A)(i) of the FFDCA allows EPA to establish a tolerance (the legal limit for a pesticide chemical residue in or on a food) only if EPA determines that the tolerance is ''safe.'' Section 408(b)(2)(A)(ii) defines ''safe'' to mean that ''there is a reasonable certainty that no harm will result from aggregate exposure to the pesticide chemical residue, including all anticipated dietary exposures and all other exposures for which there is reliable information.'' This includes exposure through drinking water and in residential settings, but does not include occupational exposure. Section 408(b)(2)(C) requires EPA to give special consideration to exposure of infants and children to the pesticide chemical residue in establishing a tolerance and to ''ensure that there is a reasonable certainty that no harm will result to infants and children from aggregate exposure to the pesticide chemical residue.''

EPA performs a number of analyses to determine the risks from aggregate exposure to pesticide residues. For further discussion of the regulatory requirements of section 408 and a complete description of the risk assessment process, see the Final Rule on Bifenthrin Pesticide Tolerances, November 26, 1997, (62 FR 62961) (FRL 5754–7).

II. Aggregate Risk Assessment and Determination of Safety

Consistent with section 408(b)(2)(D), EPA has reviewed the available scientific data and other relevant information in support of this action. EPA has sufficient data to assess the hazards of diflufenzopyr and to make a determination on aggregate exposure, consistent with section 408(b)(2), for tolerances for combined residues of diflufenzopyr, 2-(1-[([3,5-difluorophenylamino] carbonyl)hydrazono]ethyl)-3-pyridinecarboxylic acid, and its metabolites convertible to M1, (8-methylpyrido[2,3-*d*]pyridazin-5(6*H*)-one) on field corn stover, forage and grain at 0.05 ppm. EPA's assessment of the dietary exposures and risks associated with establishing the tolerance follows.

A. Toxicological Profile

EPA has evaluated the available toxicity data and considered its validity, completeness, and reliability as well as the relationship of the results of the studies to human risk. EPA has also considered available information concerning the variability of the sensitivities of major identifiable subgroups of consumers, including infants and children. The nature of the toxic effects caused by diflufenzopyr are discussed below.

1. Acute toxicology studies place technical-grade diflufenzopyr in Toxicity Category III or IV for all routes of exposure. It is not a dermal sensitizer.

2. In a subchronic feeding study in rats, male and female Wistar rats were fed test diets containing technical diflufenzopyr, purity 96%, at dose levels of 0, 1,000, 5,000, 10,000 and 20,000 ppm (equal to 0, 60.8, 352, 725 and 1,513 milligram/kilogram body weight/day (mg/kg bw/day) for males, and 0, 72.8, 431, 890 and 1,750 mg/kg bw/day for females) for a period of 13 weeks, 10 rats per sex per group. An additional 10 rats per sex were assigned to the 0 and 20,000 ppm groups for a 4-week recovery period following treatment. The no observed adverse effect level (NOAEL) was set at 5,000 ppm (equal to 352 mg/kg bw/day for males, and 431 mg/kg bw/day for females) based on lower mean body weight gain and decreased food efficiency in the 10,000 and 20,000 ppm groups, both sexes. Additional findings were decreased food intake (20,000 ppm, males only); slight increases in cholesterol (20,000 ppm, both sexes, and 10,000 ppm, males only) and ALAT (10,000 and 20,000 ppm, both sexes); and slightly lower chloride (20,000 ppm, both sexes). Histopathological findings were an increased incidence of foamy macrophages in the lungs in the 10,000 and 20,000 ppm groups, both sexes, and testicular atrophy in the 20,000 ppm group. Following the 4-week recovery period, the only treatment-related effects which showed partial or no evidence of recovery were foamy macrophages in the lungs and testicular atrophy.

3. In a 13-week feeding study, male and female CD-1 mice were fed test diets containing technical diflufenzopyr, purity 97.1%, at dietary concentrations of 0, 350, 1,750, 3,500 and 7,000 ppm (equal to 0, 58, 287, 613 and 1,225 mg/kg bw/day for males, and 0, 84, 369, 787 and 1,605 mg/kg bw/day for females) for a period of 13 weeks, 10 mice per sex per group. The NOAEL was determined to be 7,000 ppm (equal to 1,225 mg/kg bw/day for males and 1,605 mg/kg bw/day for females) since there were no treatment-related effects observed in male or female mice at any dose level tested.

4. In a subchronic toxicity study in dogs, diflufenzopyr (98% a.i.) was administered to beagle dogs (4/sex/dose) by feeding at dose levels of 0, 1,500, 10,000, or 30,000 ppm (0, 58, 403, or 1,131 mg/kg/day for males; 0, 59, 424, or 1,172 mg/kg/day for females) for 13 weeks. The lowest adverse effect level (LOAEL) for this study is 10,000 ppm (403 mg/kg/day in males and 424 mg/kg/day in females), based on the occurrence of erythroid hyperplasia in the bone marrow, extramedullary hemopoiesis in the liver, and hemosiderin deposits in Kupffer cells. The NOAEL is 1,500 ppm (58 mg/kg/day in males and 59 mg/kg/day in females).

5. In the subchronic dermal toxicity study, technical diflufenzopyr, purity 96.4%, was moistened with distilled water and administered by dermal application to male and female New Zealand White rabbits, 5/sex/dose, at dose levels of 0, 100, 300 and 1,000 mg/kg bw per application. Duration of application was 6 hours a day, daily for 21 to 24 consecutive days. The NOAEL for systemic toxicity was determined to be 1,000 mg/kg bw/day, since there were no apparent signs of treatment-related systemic effects observed in male or female rabbits at any dose level tested. A NOAEL for dermal effects could not be determined since local dermal irritation was observed at all dose levels tested (there were no corresponding findings upon histopathological examination).

6. In a chronic toxicity study in dogs, diflufenzopyr (98.1% a.i.) was administered to beagle dogs (4/sex/dose) by feeding at dose levels of 0, 750, 7,500, or 15,000 ppm (0, 26, 299, or 529 mg/kg/day for males; 0, 28, 301, or 538 mg/kg/day for females) for 52 weeks. The LOAEL for this study is 7,500 ppm (299 mg/kg/day for males and 301 mg/kg/day for females), based on erythroid hyperplasia in the bone marrow in bone sections, reticulocytosis, and increased hemosiderin deposits in the liver, kidneys, and spleen. The NOAEL is 750 ppm (26 mg/kg/day for males and 28 mg/kg/day for females).

7. In a mouse carcinogenicity study, male and female CD-1 mice were fed test diets containing technical diflufenzopyr, purity 98.1%, at dietary concentrations of 0, 700, 3,500 and 7,000 ppm (equal to 0, 100, 517 and 1,037 mg/kg bw/day for males, and 0, 98, 500 and 1,004 mg/kg bw/day for females), 60 mice per sex per group, for a period of 78 weeks. The NOAEL for systemic toxicity was determined to be 7,000 ppm (equal to 1,037 mg/kg bw/day for males and 1,004 mg/kg bw/day for females). There were no treatment-related effects observed at any dose level tested in male rats. There was a slight, but statistically significantly lower mean overall body weight gain for

females in the 7,000 ppm group, due primarily to decreased gain/increased weight loss during the second year of the study. In the absence of any other treatment-related findings, this was not considered to be an adverse, toxicologically significant finding. There was no evidence of oncogenic potential of diflufenzopyr for male or female mice at any dose level tested.

8. In a combined chronic toxicity/carcinogenicity study, male and female Wistar rats were fed test diets containing technical diflufenzopyr, purity 97.1% to 99.6%, at dietary concentrations of 0, 500, 1,500, 5,000 and 10,000 ppm (equal to 0, 22, 69, 236 and 518 mg/kg bw/day for males, and 0, 29, 93, 323 and 697 mg/kg bw/day for females), 72 rats per sex per group, for a period of 104 weeks. The NOAEL for systemic toxicity was set at 5,000 ppm (equal to 236 mg/kg bw/day for males and 323 mg/kg bw/day for females). Treatment-related effects in the 10,000 ppm group were significantly lower body weight and body weight gains throughout the study period and decreased food efficiency. There was no evidence of oncogenic potential of diflufenzopyr at any dose level tested. The incidences of benign and malignant tumors were comparable between control and treated groups.

9. In a developmental toxicity study, technical diflufenzopyr (98.1% a.i.) in 0.5% aqueous methyl cellulose was administered by gavage to 25 female Crl: CD BR VAF/Plus (Sprague Dawley) rats/dose at dose levels of 0, 100, 300, or 1,000 mg/kg/day from days 6 through 15 of gestation. The maternal NOAEL is 300 mg/kg/day and the maternal LOAEL is 1,000 mg/kg/day based on decreases in food consumption and weight gain. Developmental effects, characterized as significantly lower fetal body weights in males (5%) and skeletal variations, exhibited as incompletely ossified and unossified sternal centra and reduced fetal ossification sites for caudal vertebrae, were observed at 1,000 mg/kg/day. The developmental LOAEL is 1,000 mg/kg/day, based on decreased fetal body weights and skeletal variations. The developmental NOAEL is 300 mg/kg/day.

10. In a developmental toxicity study, technical diflufenzopyr (98.1% a.i.) in 0.5% aqueous methyl cellulose was administered by gavage to 20 female New Zealand White Hra: (NZW)SPF rabbits/dose at dose levels of 0, 30, 100, or 300 mg/kg/day from days 6 through 19 of gestation. The maternal LOAEL is 100 mg/kg/day, based on minimal reductions in body weight gain with no reduction in food consumption and clinical signs of toxicity (abnormal feces). The maternal NOAEL is 30 mg/kg/day. Developmental effects, characterized as significant increases ($p \leq 0.01$) in the incidence of supernumerary thoracic rib pair ossification sites (12.74 vs. 12.54 for controls) occurred at the 300 mg/kg/day dose. No treatment-related developmental effects were noted at the low- or mid-doses. The developmental LOAEL is 300 mg/kg/day based on increased skeletal variations (supernumerary rib ossification sites). The developmental NOAEL is 100 mg/kg/day.

11. In a 2-generation reproduction study, technical diflufenzopyr (98.1% a.i.) was administered continuously in the diet to 26 Wistar rats/sex/dose at dose levels of 0, 500, 2,000 or 8,000 ppm in the diet (0, 27.3–42.2, 113.1–175.9, or 466.2–742.0 mg/kg/day). The systemic LOAEL is 2,000 ppm (113.1–175.9 mg/kg/day) based on reduced body weight gain, increased food consumption, and increased seminal vesicle weights. The systemic NOAEL is 500 ppm (27.3–42.2 mg/kg/day). The reproductive LOAEL is 8,000 ppm (466.2–742.0 mg/kg/day) based on lower live birth and viability indices, total pre-perinatal loss, reduced body weights and body weight gain during lactation, a higher proportion of runts, and a higher percentage of offspring with no milk in the stomach. The reproductive NOAEL is 2,000 ppm (113.1–175.9 mg/kg/day).

12. In an acute neurotoxicity study, diflufenzopyr (96.4% a.i.) was administered by gavage to Crl:CD BR rats (10/sex/group) at dose levels of 0, 125, 500 or 2,000 mg/kg. The rats were evaluated for reactions in functional observations and motor activity measurements at 3 hours, 7 days, and 14 days postdosing. Histopathological evaluation on the brain and peripheral nerves was assessed after day 14. Diflufenzopyr had no definite impact on neurotoxic responses, although a few abnormalities were observed in the functional battery on the day of dosing. A decrease in immediate righting responses that was observed in several males in all treatment groups was not concentration-dependent. Nasal staining was observed in more rats in the 2,000 mg/kg treatment groups (6 males; 3 females), but was not considered a definite or significant response to treatment. Lower mean brain weights in all female treatment groups lacked associated macroscopic and microscopic histopathological changes, and were only 4–5% lower than the control brain weight. Mean locomotor activities for the 2,000 mg/kg female treatment groups were decreased on Days 7 (~27%, $p < 0.05$) and 14 (~15%, not significant) after dosing, but the pattern of activity for the individual animals was similar to the individual controls over time. There were no definite treatment-related differences in body weights or food consumption in any of the treatment groups. There was no evidence of treatment-related neuropathology in the 2,000 mg/kg treatment group. A LOAEL was not established. The NOAEL for acute neurotoxicity is 2,000 mg/kg (the limit dose).

13. In a subchronic neurotoxicity study, diflufenzopyr (96.4% a.i.) was administered in the diet to Crl: CD BR rats (10/sex/group) at dose levels of 0, 25, 75 or 1,000 mg/kg/day for 13 weeks. The rats were evaluated for reactions in functional observations and motor activity testing at 4 hours and during weeks 4, 8 and 13 of treatment. No treatment-related neurotoxicological effects were observed at any treatment level. A LOAEL for neurotoxicological effects was not established; the NOAEL was 1,000 mg/kg/day for both sexes. Treatment-related toxic effects were observed at the 1,000 mg/kg/day treatment level. The toxicological LOAEL for this study is 1,000 mg/kg/day, based on decreased body weight gains for both sexes. The toxicological NOAEL is 75 mg/kg/day.

14. In a microbial mutagenicity assay, Salmonella typhimurium strains TA98, TA100, TA1535, TA1537, and TA1538 were exposed to diflufenzopyr (97.1%) in DMSO at concentrations of 333, 667, 1,000, 3,330, 6,670 and 10,000 µg/plate in the presence and absence of mammalian metabolic activation. Diflufenzopyr (97.1%) was tested to twice the limit concentration of 5,000 µg/plate and cytotoxicity was observed at 6,670 and 10,000 µg/plate in the absence of activation (-S9) but not in its presence (+S9). The positive controls induced the appropriate responses in the corresponding strains. There was no evidence that the test article induced mutant colonies over background.

15. In a mammalian cell gene mutation assay at the thymidine kinase locus, heterozygous L5178Y (TK +/-) mouse lymphoma cells cultured *in vitro* were exposed in independent repeat assays to diflufenzopyr technical (97.1% a.i.) in dimethyl sulfoxide at dose levels ranging from 0.05 to 3.0 mg/mL (50 to 3,000 µg/mL) in the presence and absence of S9 mammalian metabolic activation in the first trial, and 0.05 to 2.0 mg/mL (50 to 2,000 µg/mL) in the second. Diflufenzopyr was tested up to cytotoxic dose levels and mutation frequencies were determined for dose levels selected on the basis of relative

growth. Although initially declared positive by the then study director, application of more recent criteria for mutagenic responses has rendered the test article negative for forward gene mutation at the TK locus in mouse L5178Y cells in the presence and absence of S9 activation. The positive controls induced the appropriate responses.

16. In an *in vivo* mouse bone marrow micronucleus assay, groups of 15 male and female ICR mice were dosed by oral gavage with diflufenzopyr (technical, 97.1%) in corn oil at 500, 1,667, and 5,000 mg/kg. Bone marrow cells were harvested at 24, 48, or 72 hours and scored for micronucleated polychromatic erythrocytes (MPCEs). No mortalities or adverse clinical signs were observed at any dose including the limit dose of 5,000 mg/kg, and there were no changes in the PCE/NCE ratios (an indirect measure of cytotoxicity). The positive control induced significant increases in MPCEs, also in the absence of any target cell cytotoxicity. No significant increase in the frequency of MPCEs in bone marrow cells after any treatment time were recorded; therefore, the test article is considered negative in this micronucleus assay.

17. In an unscheduled DNA synthesis assay, primary rat hepatocyte cultures were exposed to diflufenzopyr (97.1% a.i.) in dimethylsulfoxide (DMSO) at 15 concentrations ranging from 0.0250 to 1,000 µg/mL in the presence of 10µCi/ml^3 HtdR (42 Ci/mmole) for approximately 19 hours. Mutagenicity, as measured by unscheduled DNA synthesis (UDS), was determined for 6 concentrations selected on the basis of cytotoxicity. The concentrations selected were 5.00, 10.0, 25.0, 50.0, 100, and 250 µg/mL. The highest concentration selected for UDS evaluation, 250 µg/mL, was moderately toxic (50.8% survival). There was no evidence that unscheduled DNA synthesis, as determined by radioactive tracer procedures (nuclear silver grain counts) was induced. The positive control induced the appropriate response.

18. In a rat metabolism study, (phenyl-U-^{14}C) or (pyridinyl-4,6-^{14}C) diflufenzopyr was administered to five Wistar rats/sex/dose group as a single intravenous dose at 1 mg/kg/day, a single oral dose (gavage) at 10 or 1,000 mg/kg or a single dose at 10 mg/kg following a 14-day pretreatment with unlabeled diflufenzopyr at 10 mg/kg. Bile-duct cannulated rats from each dose group were sacrificed at 48 hours post-dose (Subgroup 2). Non-cannulated rats from each dose group were sacrificed at 72 hours (Subgroup 1) or 24 hours (Subgroup 3) post-dose. (^{14}C) Diflufenzopyr was only partially absorbed from the GI tracts of orally dosed rats as indicated by the levels of excretion in urine and bile. In all orally dosed groups, 20–44% of the dose was excreted in the urine and 3–11% was excreted in the bile. In contrast, intravenously dosed rats excreted 61–89% of the dose in urine and 4–19% of the dose in bile. For all orally dosed groups, the level of absorption was similar between sexes. Dose level and pretreatment had little effect on the proportion of the dose excreted in urine following oral administration. Enterohepatic circulation plays a role in the elimination of ^{14}C diflufenzopyr in rats. 3–19% of the dose was recovered in the bile of all dose groups. Within 72 hours of dosing, intravenously-dosed rats excreted the majority of radioactivity in urine (61–89%), whereas orally-dosed rats excreted most of the radioactivity in feces (49–79%), regardless of radiolabel or sex. Pretreatment did not appear to affect the pattern of excretion. Bile-cannulated rats excreted lesser amounts in feces compared to non-cannulated rats; 3–19% of the dose was excreted in bile. The estimated half-lives of radiocarbon eliminated in urine and feces was 5.3-6.9 hours for all single intravenous and oral dose groups, and 7.7-10.8 hours for all repeat oral dose groups. Total radioactive residues in tissues from rats in all dose groups were <3% of the administered dose. Total tissue residue levels were highest in rats sacrificed at 24 hours post-dose; residue levels were highest in blood, blood cell, and serum for the phenyl label groups, and were highest in liver and kidney for the pyridinyl label groups. Blood residue levels for all dose groups were <1% of the administered dose at all sampling intervals through 72 hours post-dose. TLC and HPLC analyses were conducted on 0-72 and 0-48 urine and feces samples, and on 0-48 hour bile samples from each treatment regimen. The structures of the metabolites were confirmed using 2-D TLC, HPLC, LC/MS, DIP/MS, FAB/MS, and proton NMR. For each dose group, the metabolic profile was similar between sexes, except for differences in metabolite levels. Unchanged diflufenzopyr was identified as the major component in urine, feces, and bile from all dose groups using either radiolabel. Urinary metabolites identified in the ^{14}C-phenyl labeled dose groups included: 3,5-difluoroaniline (M2; aniline) and 6-((3,5-difluorophenyl) carbomyl)-8-methyl-pyrido (2,3-*d*)-5-pyridazinone (M5; carbamoyl phthalazinone). Urinary metabolites identified in the ^{14}C-pyridinyl labeled dose groups included: 8-methyl-5-hydroxy-pyrido(2,3-*d*)-pyridazine (M1; phthalazinone); carbamoyl phthalazinone (M5); 2-acetyl nicotinic acid (M6; 2-acetyl nicotinic acid); 8-methylpyrido[2,3-d]pyridazine-2,5(1*H*, 6*H*)-dione (M9; 2-keto-M1); 8-hydroxymethyl-5(6*H*)-pyrido[2,3-d]pyridazinone (M10; 8-hydroxymethyl-M1); and, 8-hydroxymethylpyrido[2,3-d]pyridazine-2,5(1*H*,6*H*)-dione (M19; 2-keto-8-hydroxymethyl-M1 or Metabolite E). Fecal metabolites identified in the phenyl label groups included: methyl *N*-(3,5-difluorophenyl)carbamate (M8) and M5. Fecal metabolites identified in the pyridinyl label groups included: M1, M5, M6, M9, and M10. Besides parent, bile samples also contained minor amounts of M5 (both labels) and M1 (pyridinyl label only). The data indicate that diflufenzopyr is excreted primarily as unchanged parent in urine, feces, and bile. Minor amounts of hydrolysis products (M1, M5, and M6) and hydroxylation products (M9, M10, and M19) were identified in excreta.

B. Toxicological Endpoints

1. *Acute toxicity*. For acute dietary risk assessment, an acute Reference Dose (RfD) of 1.0 mg/kg/day has been selected, based on the developmental NOAEL of 100 mg/kg/day from the Rabbit Developmental Study and an uncertainty factor of 100 (10x for interspecies differences and 10x for intraspecies variations). The endpoint is based on developmental findings (increased skeletal variations) in rabbits which can be attributed to a single gavage dose during gestation and which occurred at a maternally toxic dose. The population subgroup at risk for this developmental effect is females of child-bearing age (13+ years). No appropriate toxicological endpoint is available in the data base for other subgroups of the population including infants and children.

2. *Short - and intermediate - term toxicity*. Since there was no observed dermal or systemic toxicity in a rabbit 21-day dermal study with diflufenzopyr, short- and intermediate-term toxicity endpoints are not being established.

3. *Chronic toxicity*. EPA has established the RfD for diflufenzopyr at 0.26 milligrams/kilogram/day (mg/kg/day). This RfD is based on bone marrow compensated hemolytic anemia observed in the 1-year dog feeding study with a NOAEL of 26 mg/kg/day.

4. *Carcinogenicity*. Based on the lack of evidence of carcinogenicity in mice and rats at doses that were judged to be adequate to assess the carcinogenic

potential, diflufenzopyr has been characterized as ''not likely'' to be a human carcinogen.

C. Exposures and Risks

1. *From food and feed uses.* No previous tolerances have been established for the combined residues of diflufenzopyr, 2-(1-[([3,5-difluorophenylamino]carbonyl)-hydrazono]ethyl)-3-pyridinecarboxylic acid, and its metabolites convertible to M1, (8-methylpyrido[2,3-*d*]pyridazin-5(6*H*)-one). Risk assessments were conducted by EPA to assess dietary exposures from diflufenzopyr as follows:

i. *Acute exposure and risk.* Acute dietary risk assessments are performed for a food-use pesticide if a toxicological study has indicated the possibility of an effect of concern occurring as a result of a one day or single exposure. An acute dietary risk assessment was performed for diflufenzopyr, its metabolites characterized as M1, and M10. The analysis was conducted using the acute RfD of 1.0 mg/kg/day, based on developmental findings (increased skeletal variations) observed in the Rabbit Developmental Study. For the population subgroup of concern, females 13 years and older, the estimated 95th percentile of exposure is equal to 0.01% of the acute RfD. The analysis is conservative since it assumes that 100% of corn-derived foods contain residues at the tolerance level (0.05 ppm).

ii. *Chronic exposure and risk.* A chronic dietary risk assessment was performed for diflufenzopyr, its metabolites characterized as M1, and M10. The analysis used the RfD of 0.26 mg/kg bwt/day and assumed that 100% of corn-derived foods contain residues at the tolerance level (0.05 ppm). These assumptions result in a Theoretical Maximum Residue Contribution (TMRC) that is less than or equal to 0.1% of the RfD for the overall U.S. population (48 states) and all population subgroups.

2. *From drinking water.* There are no established Maximum Contaminant Levels or health advisory levels for residues of diflufenzopyr or its metabolites in drinking water. EPA used the SCI-GROW (Screening Concentration in Ground Water) model to estimate residues of diflufenzopyr in ground water and the GENEEC (Generic Expected Environmental Concentration) model to estimate diflufenzopyr residue levels in surface water. Estimated environmental concentrations (EECs) in ground water reflecting an application rate of 0.12 pounds of active ingredient per acre were 0.006 parts per billion (ppb) for acute and chronic exposure scenarios. EECs in surface water were 3.8 ppb for acute exposure scenarios and 1.95 ppb for chronic exposure scenarios. The computer generated EECs represent conservative estimates and should be used only for screening.

i. *Acute exposure and risk.* EPA has calculated a drinking water level of comparison (DWLOC) for acute exposure to diflufenzopyr in drinking water for the relevant population subgroup, females 13 + years of age. THE DWLOC is 29,970 ug/L.

To calculate the DWLOCs for acute exposure relative to an acute toxicity endpoint, the acute dietary food exposure from the DEEM (Dietary Exposure Evaluation Model) analysis was subtracted from the ratio of the acute NOAEL (used for acute dietary assessments) to the acceptable margin of exposure (MOE) for aggregate exposure to obtain the acceptable acute exposure to diflufenzopyr in drinking water. DWLOCs were then calculated using default body weights and drinking water consumption figures.

Estimated maximum concentrations of diflufenzopyr in surface and ground water are 3.80 ppb and 0.006 ppb, respectively. The estimated maximum concentrations in water are less than EPA's level of comparison (29,970 ppb) for diflufenzopyr residues in drinking water as a contribution to acute aggregate exposure. Therefore, taking into account the use proposed in this action, EPA concludes with reasonable certainty that residues of diflufenzopyr in drinking water (when considered along with other sources of exposure for which EPA has reliable data) would not result in unacceptable levels of aggregate human health risk at this time.

ii. *Chronic exposure and risk.* EPA has calculated drinking water levels of comparison (DWLOCs) for chronic exposure to diflufenzopyr in drinking water. For chronic (non-cancer) exposure to diflufenzopyr in surface and ground water, the drinking water levels of comparison are 9,100 ug/L and 2,600 ug/L for the U.S. population and the subgroup children (1–6 years old), respectively.

To calculate the DWLOCs for chronic (non-cancer) exposure relative to a chronic toxicity endpoint, the chronic dietary food exposure (from the DEEM analysis) and residential exposure were subtracted from the RfD to obtain the acceptable chronic (non-cancer) exposure to diflufenzopyr in drinking water. DWLOCs were then calculated using default body weights and drinking water consumption figures.

Estimated average concentrations of diflufenzopyr in surface and ground water are 1.95 ppb and 0.006 ppb, respectively. The DWLOCs are 9,100 ppb for the U.S. population and 2,600 ppb for the subgroup, children (1–6 years old). The estimated average concentrations of diflufenzopyr in surface and ground water are less than EPA's levels of comparison for diflufenzopyr in drinking water as a contribution to chronic aggregate exposure.

3. *From non-dietary exposure.* There are no registered or proposed residential uses for diflufenzopyr.

4. *Cumulative exposure to substances with common mechanism of toxicity.* Section 408(b)(2)(D)(v) requires that, when considering whether to establish, modify, or revoke a tolerance, the Agency consider ''available information'' concerning the cumulative effects of a particular pesticide's residues and ''other substances that have a common mechanism of toxicity.''

EPA does not have, at this time, available data to determine whether diflufenzopyr has a common mechanism of toxicity with other substances or how to include this pesticide in a cumulative risk assessment. Unlike other pesticides for which EPA has followed a cumulative risk approach based on a common mechanism of toxicity, diflufenzopyr does not appear to produce a toxic metabolite produced by other substances. For the purposes of this tolerance action, therefore, EPA has not assumed that diflufenzopyr has a common mechanism of toxicity with other substances. For information regarding EPA's efforts to determine which chemicals have a common mechanism of toxicity and to evaluate the cumulative effects of such chemicals, see the Final Rule for Bifenthrin Pesticide Tolerances (62 FR 62961, November 26, 1997).

D. Aggregate Risks and Determination of Safety for U.S. Population

1. *Acute risk.* For the population subgroup of concern, females 13+ years old, the acute dietary (food) exposure does not exceed 0.02% of the acute RfD. The drinking water level of comparison (DWLOC) for acute exposure to diflufenzopyr residues is 29,970 ug/L for females (13+ years). The maximum concentration of diflufenzopyr in drinking water (3.80 ug/L) is less than EPA's level of comparison for diflufenzopyr in drinking water as a contribution to acute aggregate exposure. EPA concludes with reasonable certainty that residues of diflufenzopyr in drinking water will not contribute significantly to the aggregate acute human health risk and that the

acute aggregate exposure from diflufenzopyr in food and water will not exceed the Agency's level of concern for acute dietary exposure.

2. *Chronic risk.* Using the TMRC exposure assumptions described above, EPA has concluded that aggregate exposure to diflufenzopyr from food will utilize less than 0.1% of the RfD for the U.S. population. The major identifiable subgroup with the highest aggregate exposure, children 1–6 years old, is ''discussed below.'' EPA generally has no concern for exposures below 100% of the RfD because the RfD represents the level at or below which daily aggregate dietary exposure over a lifetime will not pose appreciable risks to human health. Despite the potential for exposure to diflufenzopyr in drinking water and from non-dietary, non-occupational exposure, EPA does not expect the aggregate exposure to exceed 100% of the RfD. EPA concludes that there is a reasonable certainty that no harm will result from aggregate exposure to diflufenzopyr residues.

3. *Short- and intermediate-term risk.* Short- and intermediate-term aggregate exposure takes into account chronic dietary food and water (considered to be a background exposure level) plus indoor and outdoor residential exposure. There are no established or proposed residential uses for diflufenzopyr. Therefore, the short and intermediate aggregate risks are adequately addressed by the chronic aggregate dietary risk assessment.

4. *Aggregate cancer risk for U.S. population.* Diflufenzopyr has been classifiedd as ''not likely'' to be a human carcinogen.

5. *Determination of safety.* Based on these risk assessments, EPA concludes that there is a reasonable certainty that no harm will result from aggregate exposure to diflufenzopyr residues.

E. Aggregate Risks and Determination of Safety for Infants and Children

1. *Safety factor for infants and children*— i. *In general.* In assessing the potential for additional sensitivity of infants and children to residues of diflufenzopyr, EPA considered data from developmental toxicity studies in the rat and rabbit and a two-generation reproduction study in the rat. The developmental toxicity studies are designed to evaluate adverse effects on the developing organism resulting from maternal pesticide exposure gestation. Reproduction studies provide information relating to effects from exposure to the pesticide on the reproductive capability of mating animals and data on systemic toxicity.

FFDCA section 408 provides that EPA shall apply an additional tenfold margin of safety for infants and children in the case of threshold effects to account for pre-and post-natal toxicity and the completeness of the database unless EPA determines that a different margin of safety will be safe for infants and children. Margins of safety are incorporated into EPA risk assessments either directly through use of a margin of exposure (MOE) analysis or through using uncertainty (safety) factors in calculating a dose level that poses no appreciable risk to humans. EPA believes that reliable data support using the standard uncertainty factor (usually 100 for combined inter- and intra-species variability) and not the additional tenfold MOE/uncertainty factor when EPA has a complete data base under existing guidelines and when the severity of the effect in infants or children or the potency or unusual toxic properties of a compound do not raise concerns regarding the adequacy of the standard MOE/safety factor.

ii. *Pre- and post-natal sensitivity.* There is no indication of increased sensitivity of rats or rabbits to *in utero* and/or early postnatal exposure to diflufenzopyr in the developmental and reproductive toxicity studies.

iii. *Conclusion.* There is a complete toxicity database for diflufenzopyr and exposure data is complete or is estimated based on data that reasonably accounts for potential exposures. Taking into account the completeness of the database and the toxicity data regarding pre- and post-natal sensitivity, EPA concludes, based on reliable data, that use of the standard margin of safety will be safe for infants and children without addition of another tenfold factor.

2. *Acute risk.* No appropriate acute toxicological endpoint has been identified for infants and children.

3. *Chronic risk.* Using the exposure assumptions described above, EPA has concluded that aggregate exposure to diflufenzopyr from food will utilize 0.1% of the RfD for infants and children. EPA generally has no concern for exposures below 100% of the RfD because the RfD represents the level at or below which daily aggregate dietary exposure over a lifetime will not pose appreciable risks to human health. Despite the potential for exposure to diflufenzopyr in drinking water, EPA does not expect the aggregate exposure to exceed 100% of the RfD.

4. *Determination of safety.* Based on these risk assessments, EPA concludes that there is a reasonable certainty that no harm will result to infants and children from aggregate exposure to diflufenzopyr residues.

III. Other Considerations

A. Metabolism In Plants and Animals

The nature of the residue in plants (field corn) and animals is understood. In field corn, the urea bond is cleaved to yield metabolites containing a new bicyclic ring system. No diflufenzopyr was detected in any of the corn matrices; metabolites comprising >10% total radioactive residue (TRR) include M1 (8-methylpyrido[2,3-*d*]pyridazin-5(6*H*)-one), M10 (8-hydroxymethyl-5(6*H*)-pyrido[2,3-*d*]pyridazone) and its glucose conjugate, and M9 (8-methylpyrido[2,3-*d*]pyridazine-2,5(1*H*,6*H*)-dione in forage and fodder, and 6–14% TRR lignin was found in fodder. Corn grain contained 3–4 discrete unknowns, all at <10% TRR or <0.05 ppm each. The residues of concern in plants are diflufenzopyr, 2-(1-[([3,5-difluorophenylamino]carbonyl)-hydrazono]ethyl)-3-pyridinecarboxylic acid, and its metabolites convertible to M1 (8-methylpyrido[2,3-*d*]pyridazin-5(6*H*)-one).

In livestock, the majority (≧90%) of diflufenzopyr was excreted. In the ruminant, major metabolites include M1, M5 (6-((3,5-difluorophenylcarbamoyl-8-methyl-pyrido[2,3-*d*]-5-pyridazinone) and M19 (8-hydroxymethylpyrido[2,3-d]pyridazine-2,5(1*H*,6*H*)-dione. A substantial amount (8–50%) of diflufenzopyr was also found in milk, kidney, and liver. In poultry, diflufenzopyr was not detected, and M1 was the only significant metabolite identified, and in egg white only. Transfer of secondary residues to livestock is not expected .

B. Analytical Enforcement Methodology

Adequate enforcement methodology (gas chromatography) is available to enforce the tolerance expression. The method may be requested from: Calvin Furlow, PRRIB, IRSD (7502C), Office of Pesticide Programs, Environmental Protection Agency, 401 M St., SW., Washington, DC 20460. Office location and telephone number: Rm 101FF, Crystal Mall #2, 1921 Jefferson Davis Hwy., Arlington, VA 22202, (703–305–5229).

C. Magnitude of Residues

Residues of diflufenzopyr, 2-(1-[([3,5-difluorophenylamino]carbonyl)-hydrazono]ethyl)-3-pyridinecarboxylic acid, and its metabolites convertible to M1 (8-methylpyrido[2,3-*d*]pyridazin-5(6*H*)-one) are not expected to exceed 0.05 ppm in field corn grain, forage and stover.

D. International Residue Limits

There are no CODEX or Mexican residue limits established for diflufenzopyr or its metabolites. As part of the joint review, Canada will be setting an equivalent Maximum Residue Level (MRL) for corn grain. Therefore, no compatibility problems exist for the proposed tolerances.

E. Rotational Crop Restrictions

The end-use product, which contains the active ingredients diflufenzopyr and dicamba (sodium salts), will contain a statement limiting the planting of rotational crops for a least 120 days after application. This restriction is based on rotational crop data for dicamba. The rotational crop study submitted for diflufenzopyr was not conducted in accordance with EPA guidelines. However, based on the results of this study, the low residues in the treated corn crop and diflufenzopyr's lack of persistence in soil, EPA does not expect residues of diflufenzopyr and its metabolites to occur in rotational crops at the 120–day plant-back interval, when corn is treated at the label rate of up to 0.125 pounds active ingredient per acre per season.

IV. Conclusion

Therefore, tolerances are established for combined residues of diflufenzopyr, 2-(1-[([3,5-difluorophenylamino]carbonyl)-hydrazono]ethyl)-3-pyridinecarboxylic acid, and its metabolites convertible to M1, (8-methylpyrido[2,3-*d*]pyridazin-5(6*H*)-one) in field corn stover, forage and grain at 0.05 ppm ppm.

V. Objections and Hearing Requests

The new FFDCA section 408(g) provides essentially the same process for persons to ''object'' to a tolerance regulation as was provided in the old section 408 and in section 409. However, the period for filing objections is 60 days, rather than 30 days. EPA currently has procedural regulations which govern the submission of objections and hearing requests. These regulations will require some modification to reflect the new law. However, until those modifications can be made, EPA will continue to use those procedural regulations with appropriate adjustments to reflect the new law.

Any person may, by March 29, 1999, file written objections to any aspect of this regulation and may also request a hearing on those objections. Objections and hearing requests must be filed with the Hearing Clerk, at the address given above (40 CFR 178.20). A copy of the objections and/or hearing requests filed with the Hearing Clerk should be submitted to the OPP docket for this rulemaking. The objections submitted must specify the provisions of the regulation deemed objectionable and the grounds for the objections (40 CFR 178.25). Each objection must be accompanied by the fee prescribed by 40 CFR 180.33. If a hearing is requested, the objections must include a statement of the factual issues on which a hearing is requested, the requestor's contentions on such issues, and a summary of any evidence relied upon by the requestor (40 CFR 178.27). A request for a hearing will be granted if the Administrator determines that the material submitted shows the following: There is genuine and substantial issue of fact; there is a reasonable possibility that available evidence identified by the requestor would, if established, resolve one or more of such issues in favor of the requestor, taking into account uncontested claims or facts to the contrary; and resolution of the factual issues in the manner sought by the requestor would be adequate to justify the action requested (40 CFR 178.32). Information submitted in connection with an objection or hearing request may be claimed confidential by marking any part or all of that information as CBI. Information so marked will not be disclosed except in accordance with procedures set forth in 40 CFR part 2. A copy of the information that does not contain CBI must be submitted for inclusion in the public record. Information not marked confidential may be disclosed publicly by EPA without prior notice.

VI. Public Record and Electronic Submissions

EPA has established a record for this rulemaking under docket control number [OPP–300778] (including any comments and data submitted electronically). A public version of this record, including printed, paper versions of electronic comments, which does not include any information claimed as CBI, is available for inspection from 8:30 a.m. to 4 p.m., Monday through Friday, excluding legal holidays. The public record is located in Room 119 of the Public Information and Records Integrity Branch, Information Resources and Services Division (7502C), Office of Pesticide Programs, Environmental Protection Agency, Crystal Mall #2, 1921 Jefferson Davis Hwy., Arlington, VA.

The official record for this rulemaking, as well as the public version, as described above will be kept in paper form. Accordingly, EPA will transfer any copies of objections and hearing requests received electronically into printed, paper form as they are received and will place the paper copies in the official rulemaking record which will also include all comments submitted directly in writing. The official rulemaking record is the paper record maintained at the Virginia address in ''ADDRESSES'' at the beginning of this document.

VII. Regulatory Assessment Requirements

A. Certain Acts and Executive Orders

This final rule establishes tolerances under FFDCA section 408(d) in response to a petition submitted to the Agency. The Office of Management and Budget (OMB) has exempted these types of actions from review under Executive Order 12866, entitled *Regulatory Planning and Review* (58 FR 51735, October 4, 1993). This final rule does not contain any information collections subject to OMB approval under the Paperwork Reduction Act (PRA), 44 U.S.C. 3501 *et seq.*, or impose any enforceable duty or contain any unfunded mandate as described under Title II of the Unfunded Mandates Reform Act of 1995 (UMRA) (Pub. L. 104–4). Nor does it require any prior consultation as specified by Executive Order 12875, entitled *Enhancing the Intergovernmental Partnership* (58 FR 58093, October 28, 1993), or special considerations as required by Executive Order 12898, entitled *Federal Actions to Address Environmental Justice in Minority Populations and Low-Income Populations* (59 FR 7629, February 16, 1994), or require OMB review in accordance with Executive Order 13045, entitled *Protection of Children from Environmental Health Risks and Safety Risks* (62 FR 19885, April 23, 1997).

In addition, since tolerances and exemptions that are established on the basis of a petition under FFDCA section 408(d), such as the tolerances in this final rule, do not require the issuance of a proposed rule, the requirements of the Regulatory Flexibility Act (RFA) (5 U.S.C. 601 *et seq.*) do not apply. Nevertheless, the Agency has previously assessed whether establishing tolerances, exemptions from tolerances, raising tolerance levels or expanding exemptions might adversely impact small entities and concluded, as a generic matter, that there is no adverse economic impact. The factual basis for the Agency's generic certification for tolerance actions published on May 4, 1981 (46 FR 24950) and was provided to the Chief Counsel for Advocacy of the Small Business Administration.

B. Executive Order 12875

Under Executive Order 12875, entitled *Enhancing the Intergovernmental Partnership* (58 FR 58093, October 28, 1993), EPA may not issue a regulation that is not required by statute and that creates a mandate upon a State, local, or tribal government, unless the Federal government provides the funds necessary to pay the direct compliance costs incurred by those governments. If the mandate is unfunded, EPA must provide to OMB a description of the extent of EPA's prior consultation with representatives of affected State, local, and tribal governments, the nature of their concerns, copies of any written communications from the governments, and a statement supporting the need to issue the regulation. In addition, Executive Order 12875 requires EPA to develop an effective process permitting elected officials and other representatives of State, local, and tribal governments ''to provide meaningful and timely input in the development of regulatory proposals containing significant unfunded mandates.''

Today's rule does not create an unfunded Federal mandate on State, local, or tribal governments. The rule does not impose any enforceable duties on these entities. Accordingly, the requirements of section 1(a) of Executive Order 12875 do not apply to this rule.

C. Executive Order 13084

Under Executive Order 13084, entitled *Consultation and Coordination with Indian Tribal Governments* (63 FR 27655, May 19, 1998), EPA may not issue a regulation that is not required by statute, that significantly or uniquely affects the communities of Indian tribal governments, and that imposes substantial direct compliance costs on those communities, unless the Federal government provides the funds necessary to pay the direct compliance costs incurred by the tribal governments. If the mandate is unfunded, EPA must provide to OMB, in a separately identified section of the preamble to the rule, a description of the extent of EPA's prior consultation with representatives of affected tribal governments, a summary of the nature of their concerns, and a statement supporting the need to issue the regulation. In addition, Executive Order 13084 requires EPA to develop an effective process permitting elected officials and other representatives of Indian tribal governments ''to provide meaningful and timely input in the development of regulatory policies on matters that significantly or uniquely affect their communities.''

Today's rule does not significantly or uniquely affect the communities of Indian tribal governments. This action does not involve or impose any requirements that affect Indian tribes. Accordingly, the requirements of section 3(b) of Executive Order 13084 do not apply to this rule.

VIII. Submission to Congress and the Comptroller General

The Congressional Review Act, 5 U.S.C. 801 *et seq.*, as added by the Small Business Regulatory Enforcement Fairness Act of 1996, generally provides that before a rule may take effect, the agency promulgating the rule must submit a rule report, which includes a copy of the rule, to each House of the Congress and to the Comptroller General of the United States. EPA will submit a report containing this rule and other required information to the U.S. Senate, the U.S. House of Representatives, and the Comptroller General of the United States prior to publication of the rule in the **Federal Register**. This rule is not a ''major rule'' as defined by 5 U.S.C. 804(2).

List of Subjects in 40 CFR Part 180

Environmental protection, Administrative practice and procedure, Agricultural commodities, Pesticides and pests, Reporting and recordkeeping requirements.

Dated: January 14, 1999.

Marcia E. Mulkey,

Director, Office of Pesticide Programs.

Therefore, 40 CFR chapter I is amended as follows:

PART 180 -- [AMENDED]

1. The authority citation for part 180 continues to read as follows:

Authority: 21 U.S.C. 346a and 371.

2. By adding §180.549 to read as follows:

§180.549 Diflufenzopyr; tolerances for residues.

(a) *General.* Tolerances are established for combined residues of diflufenzopyr, 2-(1-[([3,5-difluorophenylamino]carbonyl)-hydrazono]ethyl)-3-pyridinecarboxylic acid, and its metabolites convertible to M1 (8-methylpyrido[2,3-*d*]pyridazin-5(6*H*)-one) in or on the following raw agricultural commodities.

Commodity	Parts per million
Field corn, forage	0.05
Field corn, grain	0.05
Field corn, stover	0.05

(b) *Section 18 emergency exemptions.* [Reserved]

(c) *Tolerances with regional registrations.* [Reserved]

(d) *Indirect or inadvertent residues.* [Reserved]

[FR Doc. 99–1901 Filed 1–27–99; 8:45 am]

BILLING CODE 6560–50–F

ENVIRONMENTAL PROTECTION AGENCY

40 CFR Part 180

[OPP–300788; FRL–6058–7]

RIN 2070–AB78

Partial Withdrawal of Cryolite Tolerance Revocations

AGENCY: Environmental Protection Agency (EPA).

ACTION: Final rule; partial withdrawal.

SUMMARY: This final rule and order withdraws the revocation of tolerances for residues of cryolite (fluorine compounds) on apricots, blackberries, boysenberries, dewberries, kale, loganberries, nectarines, and youngberries made in a final rule entitled ''Revocation of Tolerances for Canceled Food Uses'', (October 26, 1998; (63 FR 57067) (FRL–6035–6) which had an effective date of January 25, 1999. EPA is withdrawing the revocation of those specific tolerances because comments from Gowan Company made to the proposed rule (63 FR 5907, February 5, 1998) (FRL–5743–9) concerning cryolite were inadvertently not addressed.

DATES: This rule is effective on January 25, 1999.

FOR FURTHER INFORMATION CONTACT: For technical information contact: Joseph Nevola, Special Review Branch, (7508C), Special Review and Reregistration Division, Office of Pesticide Programs, U.S. Environmental Protection Agency, 401 M St., SW., Washington, DC 20460. Office location: Special Review Branch, CM #2, 6th floor, 1921 Jefferson Davis Hwy., Arlington, VA. Telephone: (703) 308–8037; e-mail: nevola.joseph@epa.gov.

SUPPLEMENTARY INFORMATION:

I. Does this Notice Apply to Me?

You may be affected by this notice if you sell, distribute, manufacture, or use pesticides for agricultural applications, process food, distribute or sell food, or implement governmental pesticide regulations. Pesticide reregistration and other actions [see FIFRA section 4(g)(2)] include tolerance and exemption reassessment under section 408 of the Federal Food, Drug and Cosmetic Act (FFDCA). Potentially affected categories and entities may include, but are not limited to:

Category	Examples of Potentially Affected Entities
Agricultural Stakeholders.	Growers/Agricultural Workers, Contractors [Certified/Commercial Applicators, Handlers, Advisors, etc.], Commercial Processors, Pesticide Manufacturers, User Groups, Food Consumers
Food Distributors.	Wholesale Contractors, Retail Vendors, Commercial Traders/Importers
Intergovernmental Stakeholders.	State, Local, and/or Tribal Government Agencies
Foreign Entities.	Governments, Growers, Trade Groups

This table is not intended to be exhaustive, but rather provides a guide for readers regarding entities likely to be affected by this action. Other types of entities not listed in this table could also be affected. If you have any questions regarding the applicability of this action to a particular entity, you can consult with the technical person listed in the ''FOR FURTHER INFORMATION CONTACT'' section.

II. How Can I Get Additional Information or Copies of this or Other Support Documents?

A. Electronically

You may obtain electronic copies of this document and various support documents from the EPA Internet Home Page at http://www.epa.gov/. On the Home Page select ''Laws and Regulations'' and then look up the entry for this document under ''Federal Register - Environmental Documents.'' You can also go directly to the ''Federal Register'' listings at http://www.epa.gov/homepage/fedrgstr/.

B. In Person or by Phone

If you have any questions or need additional information about this action, please contact the technical person identified in the ''FOR FURTHER INFORMATION CONTACT'' section. In addition, the official record for this notice, including the public version, has been established under docket control number [insert the appropriate docket number], (including comments and data submitted electronically as described below). A public version of this record, including printed, paper versions of any electronic comments, which does not include any information claimed as Confidential Business Information (CBI), is available for inspection in Room 119, Crystal Mall (CM) #2, 1921 Jefferson Davis Hwy., Arlington VA, from 8:30 a.m. to 4 p.m., Monday through Friday, excluding legal holidays. The Public Information and Records Integrity Branch telephone number is 703–305–5805.

III. Can I Challenge the Agency's Final Decision Presented in this Document?

Yes. You can file a written objection or request a hearing by March 29, 1999 in the following manner:

A. By Paper

Written objections and hearing requests, identified by the docket control number OPP–300788], may be submitted to: Hearing Clerk (1900), Environmental Protection Agency, room M3708, 401 M St., SW., Washington, DC 20460. Fees accompanying objections and hearing requests shall be labeled ''Tolerance Petition Fees'' and forwarded to: EPA Headquarters Accounting Operations Branch, OPP (Tolerance Fees), P.O. Box 360277M, Pittsburgh, PA 15251. A copy of any objections and hearing requests filed with the Hearing Clerk should be identified by the document control number and submitted to the Public Information and Records Integrity Branch, Information Resources and Services Division (7502C), Office of Pesticide Programs, 401 M St., SW., Washington, DC 20460. In person, bring a copy of objections and hearing requests to room 119, CM #2, 1921 Jefferson Davis Hwy., Arlington, VA 22202.

B. Electronically

A copy of objections and hearing requests filed with the Hearing Clerk may also be submitted electronically by sending e-mail to opp-docket@epamail.epa.gov, per the instructions given in ''By Paper'' above. Electronic copies of objections and hearing requests must be submitted as an ASCII file avoiding the use of special characters and any form of encryption. Copies of objections and hearing requests will also be accepted on disks in WordPerfect 5.1 or 6.1 file format or ASCII file format. All copies of objections and hearing requests in electronic form must be identified by the docket control number OPP–300788. Do not submit CBI through e-mail. Electronic copies of objections and hearing requests on this rule may be filed online at many Federal Depository libraries.

IV. What Action Is Being Taken?

In the **Federal Register** of February 5, 1998 (63 FR 5907) (FRL–5743–9), EPA issued a proposed rule for specific pesticides announcing the proposed revocation of tolerances for canceled food uses and inviting public comment for consideration and for support of tolerance retention under Federal Food, Drug, and Cosmetic Act (FFDCA) standards. The Agency received comments, considered them, and responded to them in a final rule published in the **Federal Register** on October 26, 1998 (63FR 57067) (FRL–6035–6), announcing the revocation of tolerances for residues of the pesticides listed in the regulatory text.

In the final rule, the Agency inadvertently overlooked comments on cryolite (fluorine compounds) made to the proposed rule of February 5, 1998 (63 FR 5907). This order addresses those comments and withdraws the revocation of tolerances for residues of cryolite on apricots, blackberries, boysenberries, dewberries, kale, loganberries, nectarines, and youngberries made on October 26, 1998.

Gowan Company's comment letter on the proposed changes to the cryolite tolerances, dated April 3, 1998, did not have a notation indicating the docket control number OPP–300602, as the proposed rule instructed, and consequently the letter was not inserted into the docket. In November, Gowan Co. filed an objection to the final rule (63 FR 57067) with the Hearing Clerk and provided the Agency with documentation that EPA received the comment letter in April, 1998. Gowan Co. supports the apricot and nectarine tolerances using peach data as outlined in 40 CFR 180.34(e)(8) and cites § 180.1(h) which lists the tolerance for the general category ''peaches'' as applicable to ''nectarines''. Gowan Co. supports the kale tolerance outlined in § 180.34(e)(19) using collard data. Had EPA seen these comments, the Agency would not have revoked the cryolite tolerances in question.

Also, the Interregional Research Project No. 4 (IR–4 Project), U.S. Department of Agriculture's National Agricultural Program for Minor Use Pest Management, filed an objection to the final rule (63 FR 57067) with the Hearing Clerk in November. The IR–4 Project wrote that EPA was informed of

IR–4's support of cryolite use on blackberry, boysenberry, dewberry, loganberry, and youngberry via the crop group approach outlined in 40 CFR 180.41 in the comment letter from Gowan dated April 3, 1998. In several communications to EPA from 1996 through 1998, the IR–4 Project announced that it was developing data to support cryolite use on blackberry, boysenberry, dewberry, loganberry, and youngberry via the crop group approach. The IR–4 Project is developing data on raspberries to cover caneberries. The caneberry crop subgroup is outlined in § 180.41(c)(13)(iii). Definitions and interpretations for blackberries and caneberries are given in § 180.1(h). In a letter dated May 6, 1998, the IR–4 Project declared it would petition EPA for cryolite use on caneberries in 1999.

Pursuant to FFDCA section 408(g)(2)(C), when EPA wishes to revise a tolerance regulation based on an objection to that action, the Agency shall do so by issuing an order stating the action taken and setting forth any revision to the regulation or prior order that the Agency has found to be warranted.

After reviewing the comments made by Gowan Co. and IR–4, it has been determined that the tolerance revocations in 40 CFR 180.145(a)(1) for cryolite use on apricots, blackberries, boysenberries, dewberries, kale, loganberries, nectarines, and youngberries made on October 26, 1998 (63 FR 57067) should be withdrawn. Therefore, this order withdraws those specific tolerance revocations for cryolite. However, tolerance revocations for cryolite use on ''apples''; ''beans''; ''beets, tops''; ''carrots''; ''corn''; ''mustard greens''; ''okra''; ''peanuts''; ''pears''; ''peas''; ''quinces''; ''radish, tops''; ''rutabaga, tops''; and ''turnip, tops'' remain and become effective January 25, 1999 (63 FR 57067).

V. When Does This Action Become Effective?

EPA is publishing this action as a final rule without prior notice and opportunity to comment because the Agency believes that providing notice and an opportunity to comment is unnecessary and contrary to public interests. The timing of this action, i.e., withdrawal of the Agency's revocation of a tolerance, is critical to ensure that the tolerance is not revoked before the withdrawal takes effect. In addition, the Food Quality Protection Act (FQPA), authorizes the Agency to make these determinations without notice and comment. Once the determination is made, the final rule is issued to amend the regulations to incorporate the Agency's decision. Notice and an opportunity to comment on a final rule that merely corrects the regulation is unnecessary. EPA therefore finds that there is ''good cause'' under section 553(b)(3)(B) of the Administrative Procedure Act (5 U.S.C. 553(b)(3)(B)) to make this amendment without prior notice and comment.

VI. How Do the Regulatory Assessment Requirements Apply to this Action?

A. Is this a ''Significant Regulatory Action''?

No. Under Executive Order 12866, entitled Regulatory Planning and Review (58 FR 51735, October 4, 1993), this action is not a ''significant regulatory action.'' The Office of Management and Budget (OMB) has determined that tolerance actions, in general, are not ''significant'' unless the action involves the revocation of a tolerance that may result in a substantial adverse and material affect on the economy. In addition, this action is not subject to Executive Order 13045, entitled Protection of Children from Environmental Health Risks and Safety Risks (62 FR 19885, April 23, 1997), because this action is not an economically significant regulatory action as defined by Executive Order 12866. Nonetheless, environmental health and safety risks to children are considered by the Agency when determining appropriate tolerances. Under FQPA, EPA is required to apply an additional 10–fold safety factor to risk assessments in order to ensure the protection of infants and children unless reliable data supports a different safety factor.

B. Does this Action Contain Any Reporting or Recordkeeping Requirements?

No. This action does not impose any information collection requirements subject to OMB review or approval pursuant to the Paperwork Reduction Act (44 U.S.C. 3501 *et seq.*).

C. Does this Action Involve Any ''Unfunded Mandates''?

No. This action does not impose any enforceable duty, or contain any ''unfunded mandates'' as described in Title II of the Unfunded Mandates Reform Act of 1995 (Pub.L. 104–4).

D. Do Executive Orders 12875 and 13084 Require EPA to Consult with States and Indian Tribal Governments Prior to Taking the Action in this Document?

No. Under Executive Order 12875, entitled Enhancing the Intergovernmental Partnership (58 FR 58093, October 28, 1993), EPA may not issue a regulation that is not required by statute and that creates a mandate upon a State, local or tribal government, unless the Federal government provides the funds necessary to pay the direct compliance costs incurred by those governments. If the mandate is unfunded, EPA must provide to the Office of Management and Budget (OMB) a description of the extent of EPA's prior consultation with representatives of affected State, local and tribal governments, the nature of their concerns, copies of any written communications from the governments, and a statement supporting the need to issue the regulation. In addition, Executive Order 12875 requires EPA to develop an effective process permitting elected officials and other representatives of State, local and tribal governments ''to provide meaningful and timely input in the development of regulatory proposals containing significant unfunded mandates.''

Today's rule does not create an unfunded Federal mandate on State, local or tribal governments. The rule does not impose any enforceable duties on these entities. Accordingly, the requirements of section 1(a) of Executive Order 12875 do not apply to this rule.

Under Executive Order 13084, entitled Consultation and Coordination with Indian Tribal Governments (63 FR 27655, May 19, 1998), EPA may not issue a regulation that is not required by statute, that significantly or uniquely affects the communities of Indian tribal governments, and that imposes substantial direct compliance costs on those communities, unless the Federal government provides the funds necessary to pay the direct compliance costs incurred by the tribal governments. If the mandate is unfunded, EPA must provide OMB, in a separately identified section of the preamble to the rule, a description of the extent of EPA's prior consultation with representatives of affected tribal governments, a summary of the nature of their concerns, and a statement supporting the need to issue the regulation. In addition, Executive Order 13084 requires EPA to develop an effective process permitting elected and other representatives of Indian tribal governments ''to provide meaningful and timely input in the development of regulatory policies on matters that significantly or uniquely affect their communities.''

Today's rule does not significantly or uniquely affect the communities of Indian tribal governments. This action

does not involve or impose any requirements that affect Indian Tribes. Accordingly, the requirements of section 3(b) of Executive Order 13084 do not apply to this rule.

E. Does this Action Involve Any Environmental Justice Issues?

No. This action is not expected to have any potential impacts on minorities and low income communities. Special consideration of environmental justice issues is not required under Executive Order 12898, entitled Federal Actions to Address Environmental Justice in Minority Populations and Low-Income Populations (59 FR 7629, February 16, 1994).

F. Does this Action Have a Potentially Significant Impact on a Substantial Number of Small Entities?

No. The Agency has certified that tolerance actions, including the tolerance actions in this document, are not likely to result in a significant adverse economic impact on a substantial number of small entities. The factual basis for the Agency's determination, along with its generic certification under section 605(b) of the Regulatory Flexibility Act (RFA) (5 U.S.C. 601 et seq.), appears at 63 FR 55565, October 16, 1998 (FRL–6035–7). This generic certification has been provided to the Chief Counsel for Advocacy of the Small Business Administration.

G. Does this Action Involve Technical Standards?

No. This tolerance action does not involve any technical standards that would require Agency consideration of voluntary consensus standards pursuant to section 12(d) of the National Technology Transfer and Advancement Act of 1995 (NTTAA), Pub. L. 104–113, section 12(d) (15 U.S.C. 272 note). Section 12(d) directs EPA to use voluntary consensus standards in its regulatory activities unless to do so would be inconsistent with applicable law or otherwise impractical. Voluntary consensus standards are technical standards (e.g., materials specifications, test methods, sampling procedures, business practices, etc.) that are developed or adopted by voluntary consensus standards bodies. The NTTAA requires EPA to provide Congress, through OMB, explanations when the Agency decides not to use available and applicable voluntary consensus standards.

H. Are There Any International Trade Issues Raised by this Action?

EPA is working to ensure that the U.S. tolerance reassessment program under FQPA does not disrupt international trade. EPA considers Codex Maximum Residue Limits (MRLs) in setting U.S. tolerances and in reassessing them. MRLs are established by the Codex Committee on Pesticide Residues, a committee within the Codex Alimentarius Commission, an international organization formed to promote the coordination of international food standards. When possible, EPA seeks to harmonize U.S. tolerances with Codex MRLs. EPA may establish a tolerance that is different from a Codex MRL; however, FFDCA section 408(b)(4) requires that EPA explain in a Federal Register document the reasons for departing from the Codex level. EPA's effort to harmonize with Codex MRLs is summarized in the tolerance reassessment section of individual REDs. The U.S. EPA is developing a guidance concerning submissions for import tolerance support. This guidance will be made available to interested stakeholders.

I. Will EPA Submit this Final Rule to Congress and the Comptroller General?

Yes. The Congressional Review Act, 5 U.S.C. 801 *et seq* ., as added by the Small Business Regulatory Enforcement Fairness Act of 1996, generally provides that before a rule may take effect, the agency promulgating the rule must submit a rule report, which includes a copy of the rule, to each House of the Congress and to the Comptroller General of the United States. Section 808 allows the issuing agency to make a good cause finding that notice and public procedure is impracticable, unnecessary or contrary to the public interest. This determination must be supported by a brief statement. 5 U.S.C. 808(2). EPA has made such a good cause finding for this final rule, and established an effective date of January 25, 1999. Pursuant to 5 U.S.C. 808(2), this determination is supported by the brief statement in Unit V of this preamble. EPA will submit a report containing this rule and other required information to the U.S. Senate, the U.S. House of Representatives, and the Comptroller General of the United States prior to publication of the rule in the **Federal Register**. This is not a ''major rule'' as defined by 5 U.S.C. 804(2).

List of Subjects in 40 CFR Part 180

Environmental protection, Administrative practice and procedure, Agricultural commodities, Pesticides and pests, Reporting and recordkeeping requirements.

Dated: January 25, 1999.

Stephen L. Johnson,

Acting Assistant Administrator for Prevention, Pesticides and Toxic Substances.

For the reasons set forth in the preamble, the amendment to § 180.145, published at 63 FR 57073, October 26, 1998, removing the entries for apricots, blackberries, boysenberries, dewberries, kale, loganberries, nectarines, and youngberries from the table in paragraph (a)(1) is withdrawn. The other removals from § 180.145 are not affected by this withdrawal.

[FR Doc. 99–2009 Filed 1–25–99; 4:23 pm]

BILLING CODE 6560–50–F

ENVIRONMENTAL PROTECTION AGENCY

40 CFR Part 239

[FRL–6223–8]

RIN 2050–AD03

Subtitle D Regulated Facilities; State Permit Program Determination of Adequacy; State Implementation Rule—Amendments and Technical Corrections

AGENCY: Environmental Protection Agency.

ACTION: Direct final rule.

SUMMARY: The Environmental Protection Agency (EPA) is taking direct final action to modify the State Implementation Rule (''SIR rule''). This modification changes the withdrawal of state permit programs provision in § 239.13 of the SIR rule so that Agency withdrawals of an approved state municipal solid waste landfill (MSWLF) or conditionally exempt small quantity generator (CESQG) permit program would only apply to the entire approved program.

The final SIR, which was published on October 23, 1998, set forth a flexible framework for modifications of approved programs, established procedures for withdrawal of approvals (including withdrawal of a part or parts of a state program), and confirmed the process for future program approvals so that standards that safeguard human health and the environment are maintained (63 FR 57026). Withdrawal of a part or parts of a state program will no longer apply.

EPA is also making some technical corrections to the withdrawal provision of the SIR rule.

DATES: This rule is effective on March 29, 1999 without further notice, unless EPA receives relevant adverse comment by March 1, 1999. If we receive relevant adverse comment, we will publish a timely withdrawal in the **Federal Register** informing the public that this rule will not take effect.

ADDRESSES: Comments may be sent to the RCRA Information Center (RIC), Office of Solid Waste (5305G), U.S. Environmental Protection Agency, 401 M Street, SW, Washington, DC 20460. Please see the proposed rule elsewhere in today's **Federal Register** action for additional information on submission of comments.

FOR FURTHER INFORMATION CONTACT: For general information contact the RCRA Hotline, Office of Solid Waste, U.S. Environmental Protection Agency, 401 M Street SW, Washington, DC 20460; 800–424–9346; TDD 800–553–7672 (hearing impaired); in the Washington, DC metropolitan area, the number is 703–412–9810; TDD 703–486–3323.

For more detailed information on specific aspects of this rulemaking, contact Karen Rudek, Office of Solid Waste (5306W), U.S. Environmental Protection Agency Headquarters, 401 M Street SW, Washington, DC 20460; 703–308–1682, rudek.karen@epamail.epa.gov.

SUPPLEMENTARY INFORMATION:

I. Authority

The U.S. Environmental Protection Agency (EPA or the Agency) is promulgating these amendments to the SIR rule under the authority of section 2002(a)(1) and 4005(c) of the Resource Conservation and Recovery Act of 1976 (RCRA or the Act), as amended by the Hazardous and Solid Waste Amendments of 1984.

Subtitle D of RCRA, at section 4005(c)(1)(B), requires each state to develop and implement a permit program or other system of prior approval to ensure that facilities that receive household hazardous waste or conditionally exempt small quantity generator (CESQG) hazardous waste are in compliance with the federal revised criteria promulgated under section 4010(c) of Subtitle D of RCRA. Section 4005(c)(1)(C) further directs EPA to determine whether state permit programs are adequate to ensure compliance with the revised federal criteria. Section 2002(a)(1) of RCRA authorizes EPA to promulgate regulations necessary to carry out its functions under the Act.

II. Regulated Entities

Regulated entities include state governments requesting full or partial approvals of permit programs or other systems of prior approval, or revisions to existing fully or partially approved programs.

III. Background

A. The RCRA Subtitle D Federal Revised Criteria

On October 9, 1991, EPA promulgated the ''Solid Waste Disposal Facility Criteria: Final Rule,'' which established 40 CFR part 258 (56 FR 50978). These criteria include location restrictions and standards for design, operation, ground-water monitoring, corrective action, financial assurance, and closure and post-closure care for MSWLFs. On July 1, 1996, EPA amended 40 CFR part 257 by adding Subpart B, ''Federal Disposal Standards for the Receipt of CESQG Wastes at Non-Municipal, Non-Hazardous Waste Disposal Units'' (61 FR 34252). The 40 CFR part 257, Subpart B criteria include location restrictions, ground-water monitoring, and corrective action standards for non-municipal, non-hazardous waste disposal units that receive CESQG hazardous wastes. The 40 CFR part 257, Subpart B and 40 CFR part 258 criteria, henceforth referred to as the ''Subtitle D federal revised criteria,'' establish minimum federal standards that take into account the practical capability of owners and operators and ensure that both MSWLFs and non-municipal, non-hazardous waste disposal units that receive CESQG hazardous wastes are designed and managed in a manner that is protective of human health and the environment.

Every standard in the Subtitle D federal revised criteria is designed to be implemented by the owner or operator, with or without oversight or participation by a regulatory agency. States with approved programs may choose to permit the Subtitle D federal revised criteria exactly, or they may choose to allow owners and operators to use site-specific alternative approaches to meet the federal performance standards. The flexibility that an owner or operator may be allowed under an approved state program can provide a significant reduction in the burden associated with complying with the federal criteria.

IV. The SIR Rulemaking

A. Partial Withdrawals of State Permit Programs

On January 26, 1996, EPA published a proposed rule which set forth standards which would guide states in developing, implementing, and revising RCRA Subtitle D permit programs that would meet criteria for an EPA determination of adequacy under RCRA section 4005(c)(1)(C) (61 FR 2584). In the proposal, we provided standards and procedures (§ 239.13) for withdrawing an adequacy determination when a Regional Administrator has reason to believe that a state ''* * * no longer has an adequate permit program or adequate authority to administer and enforce an approved program * * *'' (61 FR 2605). At the same time, the Agency proposed procedures for approving state permit programs on a partial basis (§ 239.11; 61 FR 2604).

EPA received a number of comments on the proposed rule, and took those comments into consideration in promulgating the SIR rule. For example, the Agency received one comment from a state environmental agency which we interpreted as suggesting that EPA include in the final rule the option of allowing Regional Administrators to withdraw a state permit program in a partial manner. In response to this comment, EPA modified the final rule to allow for such partial withdrawals of state permit programs (63 FR 57035). As promulgated, § 239.13 authorized the Regional Administrator to initiate and proceed with withdrawal actions for ''all or a part of a state program * * *'' (63 FR 57043).

Since publication of the SIR rule, however, a number of different stakeholders, including states and a state solid waste management organization, have contacted EPA and have raised questions about the partial withdrawal provision in section 239.13. Based on these additional discussions, we now recognize that there are issues and concerns that we had not considered before including the partial withdrawal provision in the SIR rule. We now believe that the issue of partial withdrawals of RCRA Subtitle D state permit programs is a matter that deserves additional discussion with relevant stakeholders. Thus, we have decided to amend the SIR rule to allow for withdrawal only of an entire program, as originally proposed (rather than allowing for the withdrawal of all or a part of an approved state program). The Agency intends to consider this issue further and to have additional discussions with interested stakeholders before taking any additional action.

B. Technical Corrections

In addition to this amendment to the SIR rule, we are also promulgating two technical corrections to errors which the Agency discovered in the language of

§ 239.13. First, in § 239.13(g)(3), both the proposed and final rule had stated that the Regional Administrator would hold a public hearing on a tentative withdrawal determination if such a hearing would ''clarify issues involved in the tentative adequacy determination'' (63 FR 57044, Oct. 23, 1998; 61 FR 2605, Jan. 26, 1996). As reflected in both the title of this section of the SIR rule (''Criteria and procedures for withdrawal of determination of adequacy'') and in the preamble to the proposed rule (61 FR 2509), it is clear that the Agency intended this language in § 239.13(g)(3) to allow the Regional Administrator to hold a public hearing to clarify issues involved in the tentative ''withdrawal'' determination and not the tentative ''adequacy'' determination. The Agency has modified the SIR rule to reflect this intention.

Second, in the first sentence of both § 239.13(f) and (g), we have inserted the word ''the'' in the phrase ''withdrawal of determination of adequacy'' to read ''withdrawal of the determination of adequacy.'' We believe that these corrections merely clarify the language without altering the intent of the two provisions.

EPA is publishing this rule without prior proposal because we view these changes as noncontroversial amendments and/or corrections to the SIR rule and anticipate no relevant adverse comment. However, in the ''Proposed Rules'' section of today's **Federal Register** publication, we are publishing a separate document that will serve as the proposal to amend the SIR rule as outlined herein if adverse comments are received. This rule will be effective on March 29, 1999 without further notice unless we receive relevant adverse comment by March 1, 1999. If EPA receives relevant adverse comment, we will publish a timely withdrawal in the **Federal Register** informing the public that the rule will not take effect. We will address all public comments in a subsequent final rule based on the proposed rule. We will not institute a second comment period on this action. Any parties interested in commenting on this action must do so at this time.

If we receive relevant adverse comment on any amendment, paragraph, or section of this rule, only those amendments, paragraphs, or sections rule will be withdrawn; the other amendments, paragraphs, and sections of the rule will go into effect within the time frame specified above.

V. Regulatory Assessments

A. Executive Order 12866: Assessment of Potential Costs and Benefits

Under Executive Order 12866 (58 FR 51735, October 4, 1993), the Agency must determine whether any proposed or final regulatory action is ''significant,'' and, therefore, subject to OMB review and the requirements of the Executive Order. The order defines ''significant regulatory action'' as one that is likely to result in a rule that may:

(a) Have an annual effect on the economy of $100 million or more, or adversely affect in a material way the economy, a sector of the economy, productivity, competition, jobs, the environment, public health or safety, or State, local, or tribal governments or communities;

(b) Create a serious inconsistency or otherwise interfere with an action taken or planned by another Agency;

(c) Materially alter the budgetary impact of entitlements, grants, user fees, or loan programs, or the rights and obligations of recipients thereof; or

(d) Raise novel legal or policy issues arising out of legal mandates, the President's priorities, or the principles set forth in the Executive Order.

It has been determined that this rule is not a ''significant regulatory action.'' Thus, EPA has not submitted this action to OMB for review under E.O. 12866.

B. Regulatory Flexibility Act

Pursuant to the Regulatory Flexibility Act (5 U.S.C. 601 et seq., as amended by the Small Business Regulatory Enforcement Fairness Act (''SBREFA'') of 1996) whenever an agency is required to publish a notice of rulemaking for any proposed or final rule, it must prepare and make available for public comment a regulatory flexibility analysis that describes the effect of the rule on small entities (i.e., small businesses, small organizations, and small governmental jurisdictions). However, no regulatory flexibility analysis is required if the head of an agency certifies the rule will not have a significant adverse economic impact on a substantial number of small entities.

SBREFA amended the Regulatory Flexibility Act to require Federal agencies to provide a statement of the factual basis for certifying that a rule will not have a significant economic impact on a substantial number of small entities. The following discussion explains EPA's determination.

The Agency has determined that today's final rule will not have a significant economic impact on a substantial number of small entities, since the rule has direct effects only on state agencies. Therefore, no regulatory flexibility analysis has been prepared. Based on the foregoing discussion, I hereby certify that this rule will not have a significant adverse economic impact on a substantial number of small entities.

C. Unfunded Mandates Reform Act

Title II of the Unfunded Mandates Reform Act of 1995 (''UMRA''), Pub. L. 104–4, establishes requirements for federal agencies to assess the effects of their regulatory actions on state, local, and tribal governments and the private sector. Under section 202 of the UMRA, EPA generally must prepare a written statement, including a cost-benefit analysis, for proposed and final rules with ''federal mandates'' that may result in expenditures to state, local, and tribal governments, in the aggregate, or to the private sector, of $100 million or more in any one year. Before promulgating an EPA rule for which a written statement is needed, section 205 of UMRA generally requires EPA to identify and consider a reasonable number of regulatory alternatives and adopt the least costly, most cost-effective, or least burdensome alternative that achieves the objectives of the rule. The provisions of UMRA section 205 do not apply when they are inconsistent with applicable law. Moreover, UMRA section 205 allows EPA to adopt an alternative other than the least costly, most cost-effective or least burdensome alternative, if the Administrator publishes with the final rule an explanation of why that alternative was not adopted. Before EPA establishes any regulatory requirements that may significantly or uniquely affect small governments, including tribal governments, it must have developed, under section 203 of UMRA, a small government agency plan. The plan must provide for notifying potentially affected small governments, enabling officials of affected small governments to have meaningful and timely input in the development of EPA regulatory proposals with significant federal intergovernmental mandates, and informing, educating, and advising small governments on compliance with the regulatory requirements.

EPA has determined that this rule does not contain a federal mandate (under the regulatory provisions of Title II of the UMRA) that may result in expenditures of $100 million or more for state and local governments in the aggregate, or for the private sector in any one year. Thus, there is no obligation to prepare a written statement, including a cost-benefit analysis, under section 202 of UMRA. For the same reasons outlined

in part V.B above, EPA has determined that this direct final rule amending the SIR rule will not significantly or uniquely affect small governments (UMRA section 203).

D. Paperwork Reduction Act

Today's rule does not add new burden as defined by the Paperwork Reduction Act, 44 U.S.C. 3501 et seq. The Office of Management and Budget has previously approved the information collection in the existing regulations and has assigned OMB control number 2050–0152, (EPA ICR No. 1608.01).

E. Executive Order 13045: Protection of Children From Environmental Health Risks and Safety Risks

Executive Order 13045: ''Protection of Children from Environmental Health Risks and Safety Risks'' (62 FR 19885, April 23, 1997) applies to any rule that: (1) is determined to be ''economically significant'' as defined under E.O. 12866, and (2) concerns an environmental health or safety risk that EPA has reason to believe may have a disproportionate effect on children. If the regulatory action meets both criteria, the Agency must evaluate the environmental health or safety effects of the planned rule on children, and explain why the planned regulation is preferable to other potentially effective and reasonably feasible alternatives considered by the Agency. This rule is not subject to E.O. 13045 because it is not an economically significant rule as defined by E.O. 12866.

F. National Technology Transfer and Advancement Act

Section 12(d) of the National Technology Transfer and Advancement Act of 1995 (''NTTAA''), Pub L. 104–113, section 12(d) (15 U.S.C. 272 note) directs EPA to use voluntary consensus standards in its regulatory activities unless to do so would be inconsistent with applicable law or otherwise impractical. Voluntary consensus standards are technical standards (e.g., materials specifications, test methods, sampling procedures, and business practices) that are developed or adopted by voluntary consensus standards bodies. The NTTAA directs EPA to provide Congress, through OMB, explanations when the Agency decides not to use available and applicable voluntary consensus standards.

This action does not involve technical standards. Therefore, EPA did not consider the use of any voluntary consensus standards.

G. Executive Order 12898: Environmental Justice

Under Executive Order 12898, ''Federal Actions to Address Environmental Justice in Minority Populations and Low-Income Populations,'' as well as through EPA's April 1995, ''Environmental Justice Strategy, OSWER Environmental Justice Task Force Action Agenda Report,'' and National Environmental Justice Advisory Council, EPA has undertaken to incorporate environmental justice into its policies and programs. EPA is committed to addressing environmental justice concerns and is assuming a leadership role in environmental justice initiatives to enhance environmental quality for all residents of the United States. The Agency's goals are to ensure that no segment of the population, regardless of race, color, national origin, or income bears disproportionately high and adverse human health and environmental effects as a result of EPA's policies, programs, and activities, and all people live in clean and sustainable communities. To address this goal, EPA considered the impacts of the final State Implementation Rule on low-income populations and minority populations and concluded that the SIR will potentially advance environmental justice causes (63 FR 57039, Oct. 23, 1998). Today's amendments to the SIR will not affect these beneficial impacts on environmental justice causes.

H. Executive Order 12875: Enhancing the Intergovernmental Partnership

Under Executive Order 12875, EPA may not issue a regulation that is not required by statute and that creates a mandate upon a State, local or tribal government, unless the Federal government provides the funds necessary to pay the direct compliance costs incurred by those governments. If the mandate is unfunded, EPA must provide to the Office of Management and Budget a description of the extent of EPA's prior consultation with representatives of affected State, local and tribal governments, the nature of their concerns, copies of any written communications from the governments, and a statement supporting the need to issue the regulation. In addition, Executive Order 12875 requires EPA to develop an effective process permitting elected officials and other representatives of State, local and tribal governments ''to provide meaningful and timely input in the development of regulatory proposals containing significant unfunded mandates.''

In developing this rule, EPA consulted with various states and a state organization to enable them to provide meaningful and timely input in the development of this rule. EPA also worked closely with state governments in the development of the final SIR (63 FR 57039, Oct. 23, 1998).

Through notice, EPA sought input from small governments during the SIR rulemaking process. However, today's rule amending the SIR rule does not create a mandate on State, local or tribal governments. The rule does not impose any enforceable duties on these entities. Accordingly, the requirements of section 1(a) of Executive Order 12875 do not apply to this rule.

I. Executive Order 13084: Consultation and Coordination With Indian Tribal Governments

Under Executive Order 13084, EPA may not issue a regulation that is not required by statute, that significantly or uniquely affects the communities of Indian tribal governments, and that imposes substantial direct compliance costs on those communities, unless the Federal government provides the funds necessary to pay the direct compliance costs incurred by the tribal governments. If the mandate is unfunded, EPA must provide to the Office of Management and Budget, in a separately identified section of the preamble to the rule, a description of the extent of EPA's prior consultation with representatives of affected tribal governments, a summary of the nature of their concerns, and a statement supporting the need to issue the regulation. In addition, Executive Order 13084 requires EPA to develop an effective process permitting elected and other representatives of Indian tribal governments ''to provide meaningful and timely input in the development of regulatory policies on matters that significantly or uniquely affect their communities.''

Today's rule does not significantly or uniquely affect the communities of Indian tribal governments. There is no impact on these communities. Accordingly, the requirements of section 3(b) of Executive Order 13084 do not apply to this rule.

VII. Submission to Congress and the General Accounting Office

The Congressional Review Act, 5 U.S.C. 801 et seq., as added by the Small Business Regulatory Enforcement Fairness Act of 1996, generally provides that before a rule may take effect, the agency promulgating the rule must submit a rule report, which includes a copy of the rule, to each House of the Congress and to the Comptroller General of the United States. EPA will submit a

report containing this rule and other required information to the U.S. Senate, the U.S. House of Representatives, and the Comptroller General of the United States prior to publication of the rule in the **Federal Register**. A major rule cannot take effect until 60 days after it is published in the **Federal Register**. This action is not a ''major rule'' as defined by 5 U.S.C. 804(2).

List of Subjects in 40 CFR Part 239

Environmental protection, Administrative practice and procedure, Municipal solid waste landfills, Non-municipal solid waste, Non-hazardous solid waste, State permit program approval, Adequacy.

Dated: January 19, 1999.

Carol M. Browner,

Administrator.

For the reasons set out in the preamble, title 40, chapter I of the Code of Federal Regulations is amended as set forth below:

PART 239—REQUIREMENTS FOR STATE PERMIT PROGRAM DETERMINATION OF ADEQUACY

1. The authority citation for Part 239 continues to read as follows:

Authority: 42 U.S.C. 6912, 6945.

2. Section 239.13 is amended by revising paragraphs (a), (b), (c), (f), and (g)(3) to read as follows:

§ 239.13 Criteria and procedures for withdrawal of determination of adequacy.

(a) The Regional Administrator may initiate withdrawal of a determination of adequacy when the Regional Administrator has reason to believe that:

(1) A state no longer has an adequate permit program; or

(2) The state no longer has adequate authority to administer and enforce an approved program in accordance with this part.

(b) Upon receipt of substantive information sufficient to indicate that a state program may no longer be adequate, the Regional Administrator shall inform the state in writing of the information.

(c) If, within 45 days of the state's receipt of the information in paragraph (b) of this section, the state demonstrates to the satisfaction of the Regional Administrator that the state program is adequate (i.e., in compliance with this part), the Regional Administrator shall take no further action toward withdrawal of the determination of adequacy and shall so notify the state and any person(s) who submitted information regarding the adequacy of the state's program and authorities.

* * * * *

(f) If the state takes appropriate action to correct deficiencies, the Regional Administrator shall take no further action toward withdrawal of the determination of adequacy and shall so notify the state and any person(s) who submitted information regarding the adequacy of the state's permit program. If the state has not demonstrated its compliance with this part to the satisfaction of the Regional Administrator, the Regional Administrator shall inform the State Director and may initiate withdrawal of the determination of state program adequacy.

(g) * * *

(3) Indicate that a public hearing will be held by EPA if sufficient public interest is expressed during the comment period or when the Regional Administrator determines that such a hearing might clarify issues involved in the tentative withdrawal determination.

* * * * *

[FR Doc. 99–1906 Filed 1–27–99; 8:45 am]

BILLING CODE 6560–50–P

CORPORATION FOR NATIONAL AND COMMUNITY SERVICE

45 CFR Part 2506

RIN 3045–AA21

Claims Collection

AGENCY: Corporation for National and Community Service.

ACTION: Interim rule with request for comments.

SUMMARY: The Corporation for National and Community Service (hereinafter the ''Corporation'') is issuing interim regulations to govern the collection of debts owed to the Corporation and to other federal agencies. These regulations describe a number of actions that the Corporation may take to collect debts owed to it. These regulations also provide that the Corporation will enter into a cross-servicing agreement with the U.S. Department of the Treasury (Treasury) under which the Treasury will take authorized action to collect amounts owed to the Corporation.

DATES: These regulations are effective on January 28, 1999. Written comments must be received on or before March 29, 1999.

ADDRESSES: Send comments to: Corporation for National and Community Service, Kenneth L. Klothen, General Counsel, 1201 New York Avenue, N.W., Washington, D.C. 20525; telefax number (202) 565–2796.

FOR FURTHER INFORMATION CONTACT: Suzanne Dupre, Associate General Counsel, telephone number (202) 606–5000, extension 396.

SUPPLEMENTARY INFORMATION: These regulations describe a number of actions that the Corporation may take to collect debts owed to it, including: making offsets against amounts (including salary payments) owed to the debtor by the Corporation or other federal agencies; making offsets against tax refunds owed to the debtor by the Internal Revenue Service; referring the debt to a private collection contractor, and referring the matter to the U.S. Department of Justice (DOJ) for the initiation of an action in a judicial proceeding against the debtor. In addition, these regulations describe the actions necessary for the Corporation to take collection actions on behalf of another federal agency. These actions could include making offsets against the salary of a Corporation employee or any other amounts owed by the Corporation.

The regulations of this part are issued under section 3 of the Federal Claims Collection Act of 1966, Public Law 89–508, 80 Stat. 308; the Debt Collection Act of 1982, Public Law 97–365, 96 Stat. 1749; the Debt Collection Improvement Act of 1996, Public Law 104–134, 110 Stat. 1321; 31 U.S.C. 3720A; and in conformity with the Federal guidelines for agency debt collection issued by the DOJ and the General Accounting Office (4 CFR chapter II) and the guidelines of the Office of Personnel Management (5 CFR part 550, subpart K) on offsets against Federal employee salaries. These regulations also provide that the Corporation will enter into a cross-servicing agreement with the Treasury which is authorized under the Debt Collection Improvement Act of 1996, to take all of the above-listed actions to collect the debt for the Corporation. The Corporation anticipates that some of these procedures may change when revised Federal Claims Collection Standards are issued by the DOJ and the Treasury.

Regulatory Flexibility Act

I certify that these regulations will not have a significant economic impact on a substantial number of small entities.

Paperwork Reduction Act

I certify that these regulations do not require additional reporting under the criteria of the Paperwork Reduction Act of 1980.

Waiver of Notice of Proposed Rulemaking and 30-Day Delay of Effective Date

Under 5 U.S.C. 553(b)(3)(B) and (d)(3), I find that good cause exists for waiving the general notice of proposed rulemaking and for making these regulations effective in less than 30 days. The Corporation wishes to have these procedures in effect at the earliest possible date in order to initiate debt collection action against persons who owe money to the Corporation.

Unfunded Mandates Reform Act of 1995

Pursuant to the Unfunded Mandates Reform Act of 1995, 2 U.S.C. 1531, the effect of these regulations on State, local, and tribal governments and the private sector has been assessed. Other than by incorporating requirements specifically set forth in law, this regulation will not compel either the private sector or State, local, and tribal governments (in the aggregate) to expend $100 million or more in any one year. Therefore, a statement under 2 U.S.C. 1532 is not required.

Submission to Congress and the General Accounting Office

Under 5 U.S.C. 801(a)(1)(A), the Corporation submitted a report containing this rule and other required information to the U.S. Senate, the U.S. House of Representatives, and the Comptroller General of the United States before publication of this rule in today's **Federal Register**. This interim rule is not a major rule as defined at 5 U.S.C. 804(2).

List of Subjects in 45 CFR Part 2506

Administrative practice and procedure, Claims, Government employees, Grants administration, Income taxes, Penalties, Wages.

For the reasons stated in the preamble, the Corporation amends 45 CFR Chapter XXV by adding Part 2506 to read as follows:

PART 2506—CLAIMS COLLECTION

Subpart A—Definitions, Authority, Administrative Collection, Compromise, Termination, and Referral of Claims

Sec.

2506.1 What definitions apply to the regulations in this Part?
2506.2 What is the Corporation's authority to issue these regulations?
2506.3 What other regulations also apply to the Corporation's debt collection efforts?
2506.4 Do these regulations apply to claims involving fraud or misrepresentation?
2506.5 What is the extent of the Chief Executive Officer's authority to compromise debts owed to the Corporation?
2506.6 What notice will I be provided if I owe a debt to the Corporation?
2506.7 What interest, penalty, and administrative costs will I have to pay on a debt owed to the Corporation?
2506.8 What opportunity do I have to obtain a review of my debt within the Corporation?
2506.9 How can I resolve the Corporation's claim through a voluntary repayment agreement?
2506.10 How will the Corporation use credit reporting agencies to collect its claims?
2506.11 How will the Corporation contract for collection services?
2506.12 When will the Corporation refer claims to the DOJ?
2506.13 Will the Corporation use a cross-servicing agreement with the Treasury to collect its claims?

Subpart B—Salary Offset

2506.20 What debts are included or excluded from coverage of these regulations on salary offset?
2506.21 May I ask the Corporation to waive an overpayment that would otherwise be collected by offsetting my salary as a federal employee?
2506.22 What are the Corporation's procedures for salary offset?
2506.23 How will the Corporation coordinate salary offsets with other agencies?
2506.24 Under what conditions will the Corporation make a refund of amounts collected by salary offset?
2506.25 Will the collection of a claim by salary offset act as a waiver of my rights to dispute the claimed debt?

Subpart C—Tax Refund Offset

2506.30 Which debts can the Corporation refer to the Department of the Treasury for collection by offsetting tax refunds?
2506.31 What are the Corporation's procedures for collecting debts by tax refund offset?

Subpart D—Administrative Offset

2506.40 Under what circumstances will the Corporation collect amounts that I owe to the Corporation (or some other federal agency) by offsetting the debt against payments that the Corporation (or some other federal agency) owes me?
2506.41 How will the Corporation request that my debt to the Corporation be collected by offsetting against some payment that another federal agency owes me?
2506.42 What procedures will the Corporation use to collect amounts I owe to a federal agency by offsetting a payment that the Corporation would otherwise make to me?
2506.43 When may the Corporation make an offset in an expedited manner?

Authority: 31 U.S.C. 3711, 3716, 3720A; 42 U.S.C. 12651f.

Subpart A—Definitions, Authority, Administrative Collection, Compromise, Termination, and Referral of Claims

§ 2506.5 What definitions apply to the regulations in this Part?

As used in this part:

(a) *Administrative offset* means the withholding of funds payable by the United States to any person (including funds payable to the United States on behalf of a State government), or the withholding of funds held by the United States for any person, in order to satisfy a debt owed to the United States.

(b) *Agency* means an executive department or agency, the United States Postal Service, the Postal Rate Commission, the United States Senate, the United States House of Representatives, and any court, court administrative office, or instrumentality in the judicial or legislative branches of the Government, and Government corporations.

(c) *Corporation* means the Corporation for National and Community Service.

(d) *Certification* means a written debt claim form received from a creditor agency which requests the paying agency to offset the salary of an employee.

(e) *Chief Executive Officer* means the Chief Executive Officer of the Corporation for National and Community Service, or his or her designee.

(f) *Creditor agency* means an agency of the Federal Government to which the debt is owed.

(g) *Debt* means money owed by a person to the United States, including a debt owed to the Corporation or to any other Federal agency.

(h) *Debtor* means a person who owes a debt. Uses of the terms ''I'', ''you,'' ''me,'' and similar references to the reader of the regulations in this part are meant to apply to debtors as defined in this paragraph (h).

(i) *Delinquent debt* means a debt that has not been paid within the time limit prescribed by the Corporation.

(j) *Disposable pay* means that part of current basic pay, special pay, incentive pay, retirement pay, retainer pay, or, in the case of an employee not entitled to basic pay, other authorized pay remaining after the deduction of any amount required by law to be withheld, excluding any garnishment under 5 CFR parts 581 and 582. The Corporation will deduct the following items in determining the amount of disposable pay that will be subject to salary offset:

(1) Federal Social Security and Medicare taxes;

(2) Federal, state, and local income taxes, but no more than would be the case if the employee claimed all dependents to which he or she is entitled and any additional amounts for which the employee presents evidence of a tax obligation supporting the additional withholding;

(3) Health insurance premiums;

(4) Normal retirement contributions as set forth in 5 CFR 581.105(e);

(5) Normal life insurance premiums, excluding optional life insurance premiums; and

(6) Levies pursuant to the Internal Revenue Code, as defined in 5 U.S.C. 5514(d).

(k) *Employee* means a current employee of an agency, including a current member of the Armed Forces or Reserve of the Armed Forces of the United States.

(l) *Federal Claims Collection Standards* means the standards published at 4 CFR chapter II.

(m) *Paying agency* means the agency of the Federal Government that employs the individual who owes a debt to the United States. In some cases, the Corporation may be both the creditor agency and the paying agency.

(n) *Payroll office* means the payroll office in the paying agency that is primarily responsible for the payroll records and the coordination of pay matters with the appropriate personnel office with respect to an employee.

(o) *Person* includes a natural person or persons, profit or non-profit corporation, partnership, association, trust, estate, consortium, State and local government, or other entity that is capable of owing a debt to the United States Government; however, agencies of the United States are excluded.

(p) *Private collection contractor* means a private debt collector under contract with an agency to collect a non-tax debt owed to the United States.

(q) *Salary offset* means a payroll procedure to collect a debt under 5 U.S.C. 5514 by deduction(s) at one or more officially established pay intervals from the current pay account of an employee, without his or her consent.

(r) *Tax refund offset* means the reduction of a tax refund by the amount of a past-due legally enforceable debt owed to the Corporation or any other Federal agency.

(s) *Waiver* means the cancellation, remission, forgiveness, or non-recovery of a debt allegedly owed by a person to the Corporation or any other Federal agency as permitted or required by 5 U.S.C. 5584 or 8346(b), 10 U.S.C. 2774, 32 U.S.C. 716, or any other law.

§ 2506.2 What is the Corporation's authority to issue these regulations?

The Corporation is issuing regulations in this part under 42 U.S.C. 12651f and 31 U.S.C. 3711, 3716, and 3720A. The Corporation is also issuing the regulations in this part in conformity with the Federal Claims Collection Standards, 4 CFR chapter II, which prescribe standards for the handling of the federal government's claims for money or property, including standards for administrative collection, compromise, termination of agency collection action, and referral to the U.S. Department of Justice (DOJ) for litigation.

§ 2506.3 What other regulations also apply to the Corporation's debt collection efforts?

All provisions of the Federal Claims Collection Standards also apply to the regulations in this part. This part supplements the Federal Claims Collection Standards by prescribing procedures and directives necessary and appropriate for operations of the Corporation.

§ 2506.4 Do these regulations apply to claims involving fraud or misrepresentation?

The Federal Claims Collection Standards and this part do not apply to any claim as to which there is an indication of fraud or misrepresentation, as described in the Federal Claims Collection Standards, unless returned to the Corporation by the DOJ to the Corporation for handling.

§ 2506.5 What is the extent of the Chief Executive Officer's authority to compromise debts owed to the Corporation?

The Chief Executive Officer may exercise his or her compromise authority for those debts not exceeding $100,000, excluding interest, in conformity with the Federal Claims Collection Act of 1966, as amended; the Federal Claims Collection Standards issued thereunder; and this part, except where standards are established by other statutes or authorized regulations issued pursuant to them.

§ 2506.6 What notice will I be provided if I owe a debt to the Corporation?

(a) When the Chief Executive Officer determines that you owe a debt to the Corporation, he or she will send you a written notice. The notice will be hand-delivered or sent to you by certified mail, return receipt requested at the most current address known to the Corporation. The notice will inform you of the following:

(1) The amount, nature, and basis of the debt, and that a designated Corporation official has reviewed the claim and has determined that the debt is valid;

(2) That payment of your debt is due as of the date of the notice, and that the debt will be considered delinquent if you do not pay it within 30 days of the date the notice is mailed or hand-delivered;

(3) The Corporation's policy concerning interest, penalties, and administrative costs, including a statement that such assessments must be made against you unless excused in accordance with the Federal Claims Collection Standards and this part;

(4) That you have the right to inspect and copy Corporation records pertaining to your debt, or to receive copies of those records if personal inspection is impractical;

(5) That you have the opportunity to enter into an agreement, in writing and signed by both you and the Chief Executive Officer, for voluntary repayment of the debt; and

(6) The address, telephone number, and name of the Corporation official available to discuss the debt.

(b) *Notice of possible collection actions.* The notice provided by the Chief Executive Officer under paragraph (a) of this section will also advise you that, if your debt (including any interest, penalties and administrative costs) is not paid within 60 days of the date of the notice, or you do not enter into a voluntary repayment agreement within 60 days of the date of the notice, the Corporation may enforce the collection of the debt by any or all of the following methods:

(1) Referral to a credit reporting agency (See § 2506.10), a collection agency (See § 2506.11), or the DOJ (See § 2506.12);

(2) If you are a Corporation employee, by deducting money from your disposable pay account (in the amount and with the frequency, approximate beginning date and duration specified by the Corporation) until the debt (and all accumulated interest, penalties, and administrative costs) is paid in full, and that such proceedings with respect to the debt are governed by 5 U.S.C. 5514;

(3) If you are an employee of a federal agency other than the Corporation, by initiating certification procedures to implement a salary offset by the federal agency, as appropriate (which may not exceed 15 percent of the employee's disposable pay), and that such proceedings with respect to the debt are governed by 5 U.S.C. 5514;

(4) By referring the debt to the U.S. Department of the Treasury (Treasury) for offset against any refund of overpayment of tax (see Subpart C of this part); or

(5) By administrative offset (see Subpart D of this part).

(c) *Notice of opportunity for review.* The notice provided by the Chief Executive Officer under paragraph (a) of this section will also advise you of the opportunity to obtain a review within the Corporation concerning the existence or amount of the debt, the proposed schedule for offset of federal employee salary payments, or whether the debt is past due or legally enforceable. The notice shall also advise you:

(1) Of the name, address, and telephone number of an officer or employee of the Corporation who may be contacted concerning procedures for requesting a review;

(2) Of the method and time period for requesting a review;

(3) That the timely filing of a request for a review on or before the 60th calendar day following the date of the notice to the debtor will stay the commencement of collection proceedings;

(4) Of the name and address of the officer or employee of the Corporation to whom you should send the request for a review;

(5) That a final decision on the review (if one is requested) will be issued at the earliest practical date, but not later than 60 days after the receipt of the request for a review, unless you request, and the review official grants, a delay in the proceedings;

(6) That any knowingly false or frivolous statements, representations, or evidence may subject you to:

(i) Disciplinary procedures appropriate under 5 U.S.C. chapter 75, 5 CFR part 752, or any other applicable statute or regulations;

(ii) Penalties under the False Claims Act, 31 U.S.C. 3729–3733, or any other applicable statutory authority; and

(iii) Criminal penalties under 18 U.S.C. 286, 287, 1001, and 102, or any other applicable statutory authority;

(7) Of any other rights available to you to dispute the validity of the debt or to have recovery of the debt waived, or remedies available to you under statutes or regulations governing the program for which the collection is being made; and

(8) That unless there are applicable contractual or statutory provisions to the contrary, amounts paid on or deducted for the debt which are later waived or found not owed will be promptly refunded to you.

(d) The Corporation will respond promptly to communications from you.

§ 2506.7 What interest, penalty, and administrative costs will I have to pay on a debt owed to the Corporation?

(a) *Interest.* (1) The Corporation will assess interest on all delinquent debts unless prohibited by statute, regulation, or contract.

(2) Interest begins to accrue on all debts from the date that the debt becomes delinquent. The Corporation will not recover interest if you pay the debt within 30 days of the date on which interest begins to accrue. Unless otherwise established in a contract, repayment agreement, or by statute, the Corporation shall assess interest at the rate established annually by the Secretary of the Treasury under 31 U.S.C. 3717, unless a different rate is necessary to protect the interests of the Corporation. The Corporation will notify you of the basis for its finding when a different rate is necessary to protect the Corporation's interests.

(3) The Chief Executive Officer may extend the 30-day period for payment without interest where he or she determines that such action is in the best interest of the Corporation. A decision to extend or not to extend the payment period is final and is not subject to further review.

(b) *Penalty.* The Corporation will assess a penalty charge, not to exceed six percent a year, on any portion of a debt that is delinquent for more than 90 days.

(c) *Administrative costs.* The Corporation will assess charges to cover administrative costs incurred as a result of your failure to pay a debt before it becomes delinquent. Administrative costs include the additional costs incurred in processing and handling the debt because it became delinquent, such as costs incurred in obtaining a credit report, or in using a private collection contractor, or service fees charged by a Federal agency for collection activities undertaken on behalf of the Corporation.

(d) *Allocation of payments.* A partial payment by a debtor will be applied first to outstanding administrative costs, second to penalty assessments, third to accrued interest, and then to the outstanding debt principal.

(e) *Waiver.* (1) The Chief Executive Officer may (without regard to the amount of the debt) waive collection of all or part of accrued interest, penalty, or administrative costs, if he or she determines that collection of these charges would be against equity and good conscience or not in the best interest of the Corporation.

(2) A decision to waive interest, penalty charges, or administrative costs may be made at any time before a debt is paid. However, where these charges have been collected before the waiver decision, they will not be refunded. The Chief Executive Officer's decision to waive or not waive collection of these charges is final and is not subject to further review.

§ 2506.8 What opportunity do I have to obtain a review of my debt within the Corporation.

(a) *Request for review.* If you desire a review within the Corporation concerning the existence or amount of the debt, the proposed schedule for offset of federal employee salary payments, or whether the debt is past due or legally enforceable, you must send such a request to the Corporation office designated in the notice to debtor. (See § 2506.6(c)).

(1) Your request for review must be signed by you and fully identify and explain with reasonable specificity all the facts and evidence that support your position.

(2) The request for review must be received by the designated office on or before the 60th calendar day following the date of the notice. Timely filing will stay the commencement of collection procedures. If you file a request for a review after the expiration of the 60 day period provided for in this section, the Corporation will accept the request if you can show that the delay was the result of circumstances beyond his or her control or because you did not receive notice of the filing deadline (unless you had actual notice of the filing deadline).

(b) *Review of Corporation records related to the debt.* (1) In accordance with § 2506.6, if you want to inspect or copy Corporation records related to the debt, you must send a letter to the official designated in the notice to the debtor stating his or her intention. Your letter must be received within 30 calendar days after the date of the notice to debtor.

(2) In response to a timely request submitted by the debtor, the designated official will notify you of the location and time when you may inspect and copy records related to the debt.

(3) If personal inspection is impractical, reasonable arrangements will be made to send you copies of those records.

(c) *Review official.* The Chief Executive Officer shall designate an officer or employee of the Corporation (who was not involved in the determination of the debt) as the review official. When required by law or regulation, the Corporation may request an administrative law judge to conduct the review, or may obtain a review

official who is an official, employee, or agent of the United States (but who is not under the supervision or control of the Chief Executive Officer). However, unless the review is conducted by an official or employee of the Corporation, any unresolved dispute you have regarding whether all or part of the debt is past due or legally enforceable (for purposes of collection by tax refund offset under § 2506.31), must be referred to the Chief Executive Officer for ultimate administrative disposition, and the Chief Executive Officer must directly notify you of his or her determination.

(d) *Review procedure.* After you request a review, the reviewing official will notify you of the form of the review to be provided. The reviewing official shall determine the type of review to be conducted (i.e. whether an oral hearing is required), and shall conduct the review in accordance with the standards included in 4 CFR 102.3(c). If the review will include an oral hearing, the notice will set forth the date, time, and location of the hearing. If the review will be on a written record, you will be notified that you should submit arguments and evidence in writing to the review official by a specified date after which the record will be closed. This date will give you reasonable time to submit documentation.

(e) *Date of decision.* The reviewing official will issue a written decision, based upon either the written record or documentary evidence and information developed at an oral hearing, as soon as practical, but not later than 60 days after the date on which the Corporation received your request for a review, unless you request and the review official grants a delay in the proceedings.

(f) *Content of review decision.* The review official shall prepare a written decision that will include:

(1) A statement of the facts presented to support the origin, nature, and amount of the debt;

(2) The reviewing official's findings, analysis, and conclusions; and

(3) The terms of any repayment schedules, if applicable.

(g) *Interest, penalty, and administrative cost accrual during review period.* During the review period, interest, penalties, and administrative costs authorized by law will continue to accrue.

§ 2506.9 How can I resolve the Corporation's claim through a voluntary repayment agreement?

In response to a notice of a debt owed to the Corporation, you may propose to the Corporation you be allowed to repay a debt through a voluntary payment agreement in lieu of the Corporation taking other collection actions under this part.

(a) Your request to enter into a voluntary repayment must:

(1) Admit the existence of the debt; and

(2) Either propose payment of the debt (together with interest, penalties, and administrative costs) in a lump sum, or set forth a proposed repayment schedule.

(b) The Corporation will consider a request to enter into a voluntary repayment agreement consistent with the standards in 4 CFR 102.11. The Chief Executive Officer may request additional information from you in order to make a determination of whether to accept a voluntary repayment agreement, including requesting financial statements if you request to make payments in installments. It is within the Chief Executive Officer's discretion to accept a repayment agreement instead of proceeding with other debt collection actions under this part, and to set the necessary terms of any voluntary repayment agreement. At the Corporation's option, you may be required to enter into a confess-judgment note or bond of indemnity with surety as part of an agreement to make payments in installments. Notwithstanding the provisions of this section, any reduction or compromise of a claim will be governed by 31 U.S.C. 3711.

§ 2506.10 How will the Corporation use credit reporting agencies to collect its claims?

(a) The Corporation may report delinquent debts to appropriate credit reporting agencies by providing the following information:

(1) A statement that the debt is valid and is overdue;

(2) The name, address, taxpayer identification number, and any other information necessary to establish the identity of the debtor;

(3) The amount, status, and history of the debt; and

(4) The program or pertinent activity under which the debt arose.

(b) Before disclosing debt information to a credit reporting agency, the Corporation will:

(1) Take reasonable action to locate the debtor if a current address is not available; and

(2) If a current address is available, provide the notice required under § 2506.6.

(c) At the time debt information is submitted to a credit reporting agency, the Corporation will provide a written statement to the reporting agency that all required actions have been taken. In addition, the Corporation will, thereafter, ensure that the credit reporting agency is promptly informed of any substantive change in the conditions or amount of the debt, and promptly verify or correct information relevant to the claim.

(d) If a debtor disputes the validity of the debt, the credit reporting agency will refer the matter to the appropriate Corporation official. The credit reporting agency will exclude the debt from its reports until the Corporation certifies in writing that the debt is valid.

§ 2506.11 How will the Corporation contract for collection services?

The Corporation will use the services of a private collection contractor where it determines that such use is in the best interest of the Corporation. When the Corporation determines that there is a need to contract for collection services, it will—

(a) Retain sole authority to:

(1) Resolve any dispute with the debtor regarding the validity of the debt;

(2) Compromise the debt;

(3) Suspend or terminate collection action;

(4) Refer the debt to the DOJ for litigation; and

(5) Take any other action under this part which does not result in full collection of the debt;

(b) Require the contractor to comply with the Privacy Act of 1974, as amended, to the extent specified in 5 U.S.C. 552a(m), with applicable Federal and State laws pertaining to debt collection practices (e.g., the Fair Debt Collection Practices Act (15 U.S.C. 1692–1692o)), and with applicable regulations of the Corporation in this chapter;

(c) Require the contractor to account accurately and fully for all amounts collected; and

(d) Require the contractor to provide to the Corporation, upon request, all data and reports contained in its files relating to its collection actions on a debt.

§ 2506.12 When will the Corporation refer claims to the DOJ?

The Chief Executive Officer will refer to the DOJ for litigation all claims on which aggressive collection actions have been taken but which could not be collected, compromised, suspended, or terminated. Referrals will be made as early as possible, consistent with aggressive Corporation collection action, and within the period for bringing a timely suit against the debtor.

§ 2506.13 Will the Corporation use a cross-servicing agreement with the Treasury to collect its claims?

Yes. The Corporation will enter into a cross-servicing agreement with the Treasury which will authorize the Treasury to take all of the debt collection actions described in this part. These debt collection services will be provided to the Corporation in accordance with 31 U.S.C. Chapter 37.

Subpart B—Salary Offset

§ 2506.20 What debts are included or excluded from coverage of these regulations on salary offset?

(a) The regulations in this subpart provide Corporation procedures for the collection by salary offset of a federal employee's pay to satisfy certain debts owed to the Corporation or to other federal agencies.

(b) The regulations in this subpart apply to collections by the Chief Executive Officer, from:

(1) Federal employees who owe debts to the Corporation; and

(2) Employees of the Corporation who owe debts to other federal agencies.

(c) The regulations in subpart A and this subpart do not apply to debts arising under the Internal Revenue Code of 1986, as amended (title 26, United States Code); the Social Security Act (42 U.S.C. 301 et seq.); the tariff laws of the United States; or to any case where collection of a debt by salary offset is explicitly provided for or prohibited by another statute (e.g., travel advances in 5 U.S.C. 5705 and employee training expenses in 5 U.S.C. 4108).

(d) Nothing in the regulations in this subpart precludes the compromise, suspension, or termination of collection actions under the standards implementing the Federal Claims Collection Act (31 U.S.C. 3711 et seq., 4 CFR parts 101–105, 38 CFR 1.900–1.994).

(e) A levy pursuant to the Internal Revenue Code takes precedence over a salary offset under this subpart, as provided in 5 U.S.C. 5514(d).

(f) This subpart does not apply to any adjustment to pay arising out of an employee's election of coverage or a change in coverage under a Federal benefits program requiring periodic deductions from pay, if the amount to be recovered was accumulated over four or fewer pay periods.

§ 2506.21 May I ask the Corporation to waive an overpayment that would otherwise be collected by offsetting my salary as a federal employee?

Yes, the regulations in this subpart do not preclude an employee from requesting waiver of an overpayment under 5 U.S.C. 5584 or 8346(b), 10 U.S.C. 2774, 32 U.S.C. 716, or under other statutory provisions pertaining to the particular debts being collected.

§ 2506.22 What are the Corporation's procedures for salary offset?

(a) The Corporation will coordinate salary deductions under this subpart as appropriate.

(b) The Corporation's payroll office will determine the amount of an employee's disposable pay and will implement the salary offset.

(c) Deductions will begin within three official pay periods following receipt by the Corporation's payroll office of certification of debt from the creditor agency.

(d) Types of collection—

(1) *Lump-sum offset.* If the amount of the debt is equal to or less than 15 percent of disposable pay, the debt generally will be collected through one lump-sum offset.

(2) *Installment deductions.* Installment deductions will be made over a period not greater than the anticipated period of employment. The size and frequency of installment deductions will bear a reasonable relation to the size of the debt and the employee's ability to pay. However, the amount deducted from any period will not exceed 15 percent of the disposable pay from which the deduction is made unless the employee has agreed in writing to the deduction of a greater amount.

(3) *Deductions from final check.* A deduction exceeding the 15 percent disposable pay limitation may be made from any final salary payment under 31 U.S.C. 3716 and the Federal Claims Collection Standards, in order to liquidate the debt, whether the employee is being separated voluntarily or involuntarily.

(4) *Deductions from other sources.* If an employee subject to salary offset is separated from the Corporation, and the balance of the debt cannot be liquidated by offset of the final salary check, the Corporation may offset any later payments of any kind against the balance of the debt, as allowed by 31 U.S.C. 3716 and the Federal Claims Collection Standards.

(e) Multiple debts. In instances where two or more creditor agencies are seeking salary offsets, or where two or more debts are owed to a single creditor agency, the Corporation's payroll office may, at its discretion, determine whether one or more debts should be offset simultaneously within the 15 percent limitation.

§ 2506.23 How will the Corporation coordinate salary offsets with other agencies?

(a) *Responsibilities of the Corporation as the creditor agency.* Upon completion of the procedures established in the regulations in this subpart and pursuant to 5 U.S.C. 5514, the Corporation must submit a debt claim to a paying agency.

(1) The Corporation must include in its claim a certification, in writing, that:

(i) The employee owes the debt;

(ii) The amount and basis of the debt;

(iii) The date the Corporation's right to collect the debt first accrued;

(iv) That the Corporation's regulations in this subpart have been approved by the Office of Personnel Management under 5 CFR part 550, subpart K;

(2) If the collection must be made in installments, the Corporation's claim will also advise the paying agency of the amount or percentage of disposable pay to be collected in each installment. The Corporation may also advise the paying agency of the number of installments to be collected, and the date of the first installment if that date is other than the next officially established pay period.

(3) The Corporation shall also include in its claim either:

(i) The employee's written consent to the salary offset;

(ii) The employee's signed statement acknowledging receipt of the procedures required by 5 U.S.C. 5514; or

(iii) Information regarding the completion of procedures required by 5 U.S.C. 5514, including the actions taken and the dates of those actions.

(4) If the employee is in the process of separating and has not received a final salary check or other final payment(s) from the paying agency, the Corporation must submit its debt claim to the paying agency for collection under 31 U.S.C. 3716. The paying agency will (under its regulations adopted under 5 U.S.C. 5514 and 5 CFR part 550, subpart K), certify the total amount of its collection on the debt and notify the employee and the Corporation. If the paying agency's collection does not fully satisfy the debt, and the paying agency is aware that the debtor is entitled to payments from the Civil Service Retirement and Disability Fund or other similar payments that may be due the debtor employee from other Federal Government sources, then (under its regulations adopted under 5 U.S.C. 5514 and 5 CFR part 550, subpart K), the paying agency will provide written notice of the outstanding debt to the agency responsible for making the other payments to the debtor employee. The written notice will state that the employee owes a debt, the amount of the debt, and that the provisions of this

section have been fully complied with. However, the Corporation must submit a properly certified claim under this paragraph (a)(4) to the agency responsible for making the payments before the collection can be made.

(5) Separated employee. If the employee is already separated and all payments due from his or her former paying agency have been paid, the Corporation may request, unless otherwise prohibited, that money due and payable to the employee from the Civil Service Retirement and Disability Fund (5 CFR part 831, subpart R, or 5 CFR part 845, subpart D) or other similar funds, be administratively offset to collect the debt.

(6) Employee transfer. When an employee transfers from one paying agency to another paying agency, the Corporation will not repeat the due process procedures described in 5 U.S.C. 5514 and this subpart to resume the collection. The Corporation will submit a properly certified claim to the new paying agency and will subsequently review the debt to make sure the collection is resumed by the new paying agency.

(b) *Responsibility of the Corporation as the paying agency.* (1) Complete claim. When the Corporation receives a certified claim from a creditor agency (under the creditor agency's regulations adopted under 5 U.S.C. 5514 and 5 CFR part 550, subpart K), deductions should be scheduled to begin within three officially established pay intervals. Before deductions can begin, the employee will receive a written notice from the Corporation including:

(i) A statement that the Corporation has received a certified debt claim from the creditor agency;

(ii) The amount of the debt claim;

(iii) The date salary offset deductions will begin; and

(iv) The amount of such deductions.

(2) Incomplete claim. When the Corporation receives an incomplete certification of debt from a creditor agency, the Corporation will return the debt claim with a notice that the creditor agency must comply with the procedures required under 5 U.S.C. 5514 and 5 CFR part 550, subpart K, and must properly certify a debt claim to the Corporation before the Corporation will take action to collect from the employee's current pay account.

(3) Review. The Corporation is not authorized to review the merits of the creditor agency's determination with respect to the amount or validity of the debt certified by the creditor agency.

(4) Employees who transfer from the Corporation to another paying agency. If, after the creditor agency has submitted the debt claim to the Corporation, the employee transfers from the Corporation to a different paying agency before the debt is collected in full, the Corporation will certify the total amount collected on the debt and notify the employee and the creditor agency in writing. The notification to the creditor agency will include information on the employee's transfer.

§ 2506.24 Under what conditions will the Corporation make a refund of amounts collected by salary offset?

If the Corporation is the creditor agency, it will promptly refund any amount deducted under the authority of 5 U.S.C. 5514, when:

(a) The debt is waived or all or part of the funds deducted are otherwise found not to be owed (unless expressly prohibited by statute or regulation); or

(b) An administrative or judicial order directs the Corporation to make a refund.

(c) Unless required or permitted by law or contract, refunds under this section will not bear interest.

§ 2506.25 Will the collection of a claim by salary offset act as a waiver of my rights to dispute the claimed debt?

Your involuntary payment of all or any portion of a debt being collected under this subpart will not be construed as a waiver of any rights which you may have under 5 U.S.C. 5514 or any other provisions of a written contract or law, unless there are statutory or contractual provisions to the contrary.

Subpart C—Tax Refund Offset

§ 2506.30 Which debts can the Corporation refer to the Department of the Treasury for collection by offsetting tax refunds?

(a) The regulations in this subpart implement 31 U.S.C. 3720A which authorizes the Treasury to reduce a tax refund by the amount of a past-due legally enforceable debt owed to a Federal agency.

(b) For purposes of this section, a past-due legally enforceable debt referable to the Treasury for tax refund offset is a debt that is owed to the Corporation; and:

(1) Is at least $25.00 dollars;

(2) Except in the case of a judgment debt, has been delinquent for at least three months and will not have been delinquent more than 10 years at the time the offset is made;

(3) Cannot be currently collected under the salary offset provisions of 5 U.S.C. 5514;

(4) Is ineligible for administrative offset under 31 U.S.C. 3716(a) by reason of 31 U.S.C. 3716(c)(2) or cannot be collected by administrative offset under 31 U.S.C. 3716(a) by the Corporation against amounts payable to the debtor by the Corporation;

(5) With respect to which the Corporation has given the debtor at least 60 days to present evidence that all or part of the debt is not past due or legally enforceable, has considered evidence presented by the debtor, and has determined that an amount of the debt is past due and legally enforceable;

(6) Which has been disclosed by the Corporation to a credit reporting agency as authorized by 31 U.S.C. 3711(e), unless the credit reporting agency would be prohibited from reporting information concerning the debt by reason of 15 U.S.C. 1681c;

(7) With respect to which the Corporation has notified or has made a reasonable attempt to notify the debtor that:

(i) The debt is past due, and

(ii) Unless repaid within 60 days thereafter, the debt will be referred to the Treasury for offset against any refund of overpayment of tax; and

(8) All other requirements of 31 U.S.C. 3720A and the Treasury regulations relating to the eligibility of a debt for tax return offset have been satisfied (31 CFR 285.2).

§ 2506.31 What are the Corporation's procedures for collecting debts by tax refund offset?

(a) The Chief Executive Officer will be the point of contact with the Treasury for administrative matters regarding the offset program.

(b) The Corporation will ensure that the procedures prescribed by the Treasury are followed in developing information about past-due debts and submitting the debts to the Treasury.

(c) The Corporation will submit a notification of a taxpayer's liability for past-due legally enforceable debt to the Treasury which will contain:

(1) The name and taxpayer identifying number (as defined in section 6109 of the Internal Revenue Code, 26 U.S.C. 6109) of the person who is responsible for the debt;

(2) The dollar amount of the past-due and legally enforceable debt;

(3) The date on which the original debt became past due;

(4) A statement certifying that, with respect to each debt reported, all of the requirements of eligibility of the debt for referral for the refund offset have been satisfied. (See § 2506.30(b)). For purposes of this section, notice that collection of the debt is affected by a bankruptcy proceeding involving the individual will bar referral of the debt to the Treasury.

(d) The Corporation shall promptly notify the Treasury to correct Corporation data submitted when it:

(1) Determines that an error has been made with respect to a debt that has been referred;

(2) Receives or credits a payment on the debt; or

(3) Receives notice that the person owing the debt has filed for bankruptcy under Title 11 of the United States Code or has been adjudicated bankrupt and the debt has been discharged.

(e) When advising debtors of an intent to refer a debt to the Treasury for offset, the Corporation will also advise the debtors of remedial actions available to defer or prevent the offset from taking place.

Subpart D—Administrative Offset

§ 2506.40 Under what circumstances will the Corporation collect amounts that I owe to the Corporation (or some other federal agency) by offsetting the debt against payments that the Corporation (or some other federal agency) owes me?

(a) The regulations in this subpart apply to the collection of any debts you owe to the Corporation, or to any request from another federal agency that the Corporation collect a debt you owe by offsetting your debt against a payment the Corporation owes you. Administrative offset is authorized under section 5 of the Federal Claims Collection Act of 1966, as amended (31 U.S.C. 3716). The Corporation shall carry out administrative offset in accordance with the provisions of the Federal Claims Collection Standards; the regulations in this subpart are intended only to supplement the provisions of the Federal Claims Collection Standards.

(b) The Chief Executive Officer, after attempting to collect a debt you owe to the Corporation under section 3(a) of the Federal Claims Collection Act of 1966, as amended (31 U.S.C. 3711(a)), may collect the debt by administrative offset, subject to the following:

(1) The debt you owe is certain in amount; and

(2) It is in the best interest of the Corporation to collect your debt by administrative offset because of the decreased costs of collection and acceleration in the payment of the debt.

(c) The Chief Executive Officer may initiate administrative offset with regard to debts you owe to another federal agency. The head of the creditor agency, or his or her designee, must submit a written request for the offset with a certification that the debt exists and that you have been afforded the necessary due process rights.

(d) The Chief Executive Officer may request another federal agency that holds funds payable to you to instead pay those funds to the Corporation in settlement of your debt. The Corporation will provide certification that:

(1) The debt exists; and

(2) You have been afforded the necessary due process rights.

(e) No collection by administrative offset will be made on any debt that has been outstanding for more than 10 years unless facts material to the Corporation or a federal agency's right to collect the debt were not known, and reasonably could not have been known, by the official or officials responsible for discovering and collecting the debt.

(f) The regulations in this subpart do not apply to:

(1) A case in which administrative offset of the type of debt involved is explicitly provided for or prohibited by another statute; or

(2) Debts owed to the Corporation by federal agencies or by any State or local government.

§ 2506.41 How will the Corporation request that my debt to the Corporation be collected by offsetting against some payment that another federal agency owes me?

The Chief Executive Officer may request that funds due and payable to you by another federal agency instead be paid to the Corporation in payment of a debt you owe to the Corporation. In requesting administrative offset, the Corporation, as creditor, will certify in writing to the federal agency that is holding funds for you:

(a) That you owe the debt;

(b) The amount and basis of the debt; and

(c) That the Corporation has complied with the requirements of 31 U.S.C. 3716, its own administrative offset regulations in this subpart, and the applicable provisions of the Federal Claims Collection Standards with respect to providing the debtor with due process.

§ 2506.42 What procedures will the Corporation use to collect amounts I owe to a federal agency by offsetting a payment that the Corporation would otherwise make to me?

Any federal agency may request that the Corporation administratively offset funds due and payable to you in order to collect a debt you owe to that agency. The Corporation will initiate the requested offset only:

(a) Upon receipt of written certification from the creditor agency stating:

(1) That you owe the debt;

(2) The amount and basis of the debt;

(3) That the agency has prescribed regulations for the exercise of administrative offset; and

(4) That the agency has complied with its own administrative offset regulations and with the applicable provisions of the Federal Claims Collection Standards, including providing you with any required hearing or review; and

(b) Upon a determination by the Chief Executive Officer that offsetting funds payable to you by the Corporation in order to collect a debt owed by you would be in the best interest of the United States as determined by the facts and circumstances of the particular case, and that such an offset would not otherwise be contrary to law.

§ 2506.43 When may the Corporation make an offset in an expedited manner?

The Corporation may effect an administrative offset against a payment to be made to you before completion of the procedures required by §§ 2506.41 and 2506.42 if failure to take the offset would substantially jeopardize the Corporation's ability to collect the debt and the time before the payment is to be made does not reasonably permit the completion of those procedures. An expedited offset will be promptly followed by the completion of those procedures. Amounts recovered by offset, but later found not to be owed to the Corporation, will be promptly refunded.

Dated: January 15, 1999.

Kenneth L. Klothen,

General Counsel.

[FR Doc. 99–1769 Filed 1–27–99; 8:45 am]

BILLING CODE 6050–28–U

FEDERAL COMMUNICATIONS COMMISSION

47 CFR Parts 73 and 74

[MM Docket No. 87–268; FCC 98–315]

Advanced Television Systems and Their Impact Upon the Existing Television Service

AGENCY: Federal Communications Commission.

ACTION: Final rule.

SUMMARY: The Commission has adopted a *Second Memorandum Opinion and Order* (*Second MO&O*) addressing petitions for reconsideration of the *Memorandum Opinion and Order on Reconsideration of the Fifth Report and Order* (*Service Reconsideration Order*) and the *Memorandum Opinion and Order on Reconsideration of the Sixth*

Report and Order (*Allotment Reconsideration Order*) in this proceeding. This *Second MO&O* generally reaffirms the Commission's DTV eligibility and allotment policies. The Commission is, however, revising and clarifying certain of its DTV allotment policies in response to petitioners' requests. These actions will resolve the remaining issues regarding our policies and rules for DTV and analog (NTSC) channel allotments.

DATES: Effective March 1, 1999.

FOR FURTHER INFORMATION CONTACT: Bruce Franca (202–418–2470), Alan Stillwell (202–418–2470) or Robert Eckert (202–428–2470), Office of Engineering and Technology.

SUPPLEMENTARY INFORMATION: This is a summary of the Commission's *Second Memorandum Opinion and Order on Reconsideration of the Fifth and Sixth Report and Orders* (*Second MO&O*) in MM Docket No. 87–268, FCC 98–315, adopted November 24, 1998, and released December 18, 1998. The full text of this decision is available for inspection and copying during normal business hours in the FCC Dockets Branch (Room 230), 1919 M Street, N.W., Washington, D.C. The complete text of this decision also may be purchased from the Commission's duplicating contractor, International Transcription Service, 1231 20th Street, N.W., Washington, D.C. 20036, (202–857–3800).

Summary of the Second Memorandum Opinion and Order on Reconsideration of the Fifth and Sixth Report and Orders

1. In the *Second MO&O,* the Commission has affirmed, with some minor modifications and clarifications, its *Memorandum Opinion and Order on Reconsideration of the Fifth Report and Order* (*Service Reconsideration Order*) in MM Docket No. 87–268, FCC 98–23, adopted February 17, 1998, 63 FR 15774 (April 1, 1998), and its *Memorandum Opinion and Order on Reconsideration of the Sixth Report and Order* (*Allotment Reconsideration Order*) in MM Docket No. 87–268, adopted February 17, 1998, FCC 98–24, 63 FR 13546 (March 3, 1998). In the *Service Reconsideration Order,* the Commission addressed petitions for reconsideration of its eligibility standards for the initial DTV channels and other rules and procedures for broadcasters to convert to digital television (DTV) service. In the *Allotment Reconsideration Order,* the Commission addressed petitions for reconsideration of its decisions on a Table of Allotments for digital television (DTV) service, policies and rules for the initial DTV allotments, procedures for assigning those allotted channels, and plans for spectrum recovery.

2. The Commission revised and clarified certain of its DTV allotment policies in response to petitioners' requests. First, in response to a petition from Fox Broadcasting Company, the Commission modified its policy temporarily restricting requests for maximization of UHF DTV station power to 200 kW to provide flexibility for DTV licensees to request higher power, up to the 1000 kW maximum, where certain conditions are met. The Commission found that the 200 kW cap may not be needed in all situations and that it is desirable to permit immediate full maximization to 1000 kW in situations where such changes would not affect the maximization plans of others. The Commission indicated that the following provisions will apply to applications proposing such power increases that would increase a station's DTV service area in one or more directions beyond the area resulting from the station's allotment parameters. Such requests must include an interference analysis that demonstrates compliance with the *de minimis* interference standard set forth in § 73.623(c)(2) of the rules. This interference analysis must be performed assuming that all other DTV facilities are operating at the DTV power levels specified for their allotment, or 200 kW, whichever is greater, and at the allotted site and antenna height above average terrain. All such applications will be placed on public notice and interested parties will be allowed 30 days to file objections. A party may object to such requests where the change would impact its future plans to maximize its own DTV operations, *i.e.*, to an extent greater than could be achieved at a power level of 200 kW. Upon the filing of an objection to a maximization application, the affected parties will be allowed 30 days to resolve the conflict. In the event the parties are unable to resolve their differences, the application will be dismissed and the applicant will be allowed to resubmit the application with a request for no more than 200 kW ERP. These policies will apply both to future applications and applications now on file at the Commission.

3. The Commission also clarified its policy with respect to pending applications to modify existing analog, or NTSC, television facilities. Several petitioners argued that the Commission's treatment of applications for modification of NTSC facilities and new NTSC applications is disparate and unfair. They observed that in the *Allotment Reconsideration Order* the Commission stated that service replication of DTV allotments is based on facilities authorized as of April 3, 1997, and that it refused requests to process all pending NTSC modification applications and grant them full DTV service replication of the modified facility. In contrast to this decision, they observe that in the *Service Reconsideration Order* the Commission stated that applications for new NTSC facilities that were pending as of April 3, 1997, would be processed and that the grantees could operate either a digital or analog station prior to conversion. These petitioners argued that all applications pending as of April 3, 1997, whether for new or modified NTSC facilities, should be treated the same. The Commission explained that its actions with respect to modification applications granted before the DTV Table were evaluated based on the same criteria that will be applied in evaluating other NTSC modification applications and did not compromise either its DTV allotment goals or opportunities for increasing the NTSC or DTV facilities of other stations, and therefore its treatment of all such applications is fair and equitable.

4. The Commission advised interested parties that in processing the remaining pending applications for modification of NTSC facilities, it will consider the impact of the proposed change on the service area of any affected DTV station as computed from the location and facilities specified in the *Second MO&O,* or any increases in facilities authorized subsequent to those established in Appendix B. The Commission further advised applicants that, to the extent it grants applications for modifications of NTSC facilities, it will not automatically increase the facilities of the associated DTV channel to replicate the new NTSC service area. In this regard, the Commission stated that it is concerned that increasing DTV facilities in this manner could result in significant new interference to either or both NTSC stations or other DTV stations. Accordingly, if parties with pending applications for NTSC modifications also desire to have their DTV facilities modified, they must submit a separate application for modification of the DTV station. Such applications for DTV station modifications will be evaluated under the criteria set forth in §§ 73.622 and 73.623 of the rules.

5. The Commission next clarified its policy with respect to protection of allotments for proposed new NTSC stations. A number of petitioners that had filed applications for new NTSC stations within areas covered by the

Commission's 1987 *Order* (*Freeze Order*) freezing acceptance of applications for new television stations in certain congested areas sought reconsideration to ensure that allotments will be available for their applications. These petitioners argued that, in the *Sixth Report and Order* in the DTV proceeding, the Commission indicated that it would continue to process applications filed on or before September 20, 1996, because it did not believe that those applications would have a significant negative impact on the DTV Table. They further contended that in the *Allotment Reconsideration Order* the Commission confirmed that it intended to protect pending NTSC applications filed by this deadline. These parties argued that in the *Allotment Reconsideration Order* the Commission made clear for the first time that applications not accepted for filing were not protected and that to the extent that a conflicting DTV allotment has been made, it did not plan to allot a replacement channel for those applications. They stated that the Commission did not provide an explanation for not protecting the allotments sought in their applications.

6. In reviewing the petitioners' requests for reconsideration, the Commission found that these parties appeared to misunderstand its policy with respect to applications for new NTSC stations that were filed on or before September 20, 1996, as that policy applies to applications for new stations at locations within areas covered by the 1987 *Freeze Order*. The Commission indicated that its policy of maintaining and protecting vacant NTSC allotments that are the subject of pending applications applied only to applications for new NTSC stations outside of the freeze areas. It stated that it did not consider applications within the freeze areas to be pending and did not protect such applications by avoiding the creation of DTV allotments that would conflict with the new NTSC stations they propose. In this regard, the Commission noted that it had indicated previously, in the *Sixth Further Notice* in the DTV proceeding, that it would continue its longstanding policy of considering requests for waiver of the *Freeze Order* on a case-by-case basis. The Commission noted that if all vacant allotments were protected, it would not be possible to accommodate all existing broadcasters and the expected service areas of many of the DTV allotments would be reduced.

7. The Commission did, however, indicate that it found it desirable to provide applicants seeking to operate new NTSC stations in the freeze areas with options to pursue their applications wherever such options would not conflict with NTSC or DTV stations (including DTV allotments, authorized or requested increases in DTV allotment facilities and proposals for new or modified DTV allotments). In this regard, it adopted the suggestion of several of the petitioners that it allow parties whose NTSC applications conflict with DTV stations to request a change in the NTSC channel they seek or to amend their application to eliminate all such conflicts. The Commission agreed that where an alternate NTSC channel below channel 60 is available, it would provide a win-win solution in avoiding interference to DTV service and allowing the public to receive additional television service. The Commission therefore stated that in a subsequent Public Notice, its Mass Media Bureau will announce a window of time during which such petitions to amend the NTSC Table of Allotments or amendments to freeze-waiver applications may be filed. Parties that had filed applications for new NTSC stations using allotments in the freeze areas will be permitted to amend their applications if such amendment would eliminate interference to DTV service predicted using the criteria set forth in § 73.623(c) of the rules. Such amendments may include changes in the ERP, directional antenna pattern, antenna height or site location requested in the application, but the amendment must conform to pertinent NTSC requirements. The application amendment may also specify DTV operation.

8. In response to an *ex parte* request from the Dispatch Broadcast Group (Dispatch), the Commission modified its operating requirements for DTV stations to provide licensees with greater flexibility in scheduling their DTV operations in the early phases of the DTV implementation process. In particular, the Commission modified its rules to allow stations, both commercial and noncommercial, that voluntarily commence DTV service early full flexibility in determining the schedule on which they operate their DTV service, and thereafter to require that they operate in accordance with the existing requirement that they must provide at least one free over-the-air DTV video program at no charge to viewers, at any time their associated NTSC stations are operating.

9. Finally, the Commission make several adjustments to the DTV Table in response to requests of individual petitioners. The revised DTV Table and associated technical parameters for station operation are available for inspection on the internet at *www.fcc.gov* and at the FCC Reference Center, Room 239, 1919 M Street, N.W., Washington, D.C. 20554 during regular business hours.

Procedural Matters

10. *Paperwork Reduction Act of 1995 Analysis.* This *Second MO&O* has been analyzed with respect to the Paperwork Reduction Act of 1995, Public Law No. 104–13, and found to impose no new or modified information collection requirements on the public.

11. *Supplemental Final Regulatory Flexibility Analysis.* With respect to this *Second MO&O*, the Commission has prepared a Supplemental Final Regulatory Flexibility Analysis, under the Regulatory Flexibility Act, of the possible significant economic impact on small entities of the rules in this document. None of the petitions for reconsideration of the *Service Reconsideration Order* or the *Allotment Reconsideration Order* raised issues concerning the Supplemental FRFAs prepared for those decisions. The Supplemental FRFA for the *Second MO&O* is as follows:

A. Need for, and Objectives of, this Memorandum Opinion and Order

12. In the *Fifth Report and Order*, the Commission adopted rules for the transition to DTV service, including eligibility standards for the initial DTV channels, a construction schedule, a requirement that broadcasters continue to provide a free, over-the-air television service, and a simulcast requirement phased-in at the end of the transition period. In the *Service Reconsideration Order*, the Commission addressed petitions for reconsideration of its eligibility standards for the initial DTV channels and other elements of its rules and procedures for broadcasters to convert to DTV service. In the *Sixth Report and Order*, the Commission adopted policies, procedures and technical criteria for use in conjunction with operation of broadcast digital television (DTV) service, adopted a DTV Table of Allotments, adopted a plan for the recovery of a portion of the spectrum currently allocated to TV broadcasting, and provided procedures for assigning DTV frequencies. In the *Allotment Reconsideration Order*, the Commission addressed petitions for reconsideration of its decisions on the DTV Table of Allotments, policies and rules for the initial DTV allotments, procedures for assigning those allotted channels, and plans for spectrum recovery. In the present *Memorandum Opinion and Order*, the Commission addresses petitions for reconsideration

of both the *Service Reconsideration Order* and the *Allotment Reconsideration Order*. Throughout this proceeding, we have sought to allot DTV channels in a manner that is most efficient for broadcasters and the public and least disruptive to broadcast television service during the period of transition from NTSC to DTV service. We wish to ensure that the spectrum is used efficiently and effectively through reliance on market forces, and ensure that the introduction of digital TV fully serves the public interest.

B. Summary of Significant Issues Raised by the Public In Response to the Supplemental FRFAs

13. None.

C. Description and Estimate Of The Number Of Small Entities To Which The Rules Will Apply

14. As noted, Final Regulatory Flexibility Analyses were incorporated into the *Fifth Report and Order* and the *Sixth Report and Order*. In those analyses, we described in detail the small entities that might be significantly affected by the rules adopted in the *Fifth Report and Order* and the *Sixth Report and Order*. Those entities included full service television stations, TV translator facilities, and LPTV stations. In addition, while we did not believe that television equipment manufacturers, manufacturers of television equipment used by consumers, and computer manufacturers constituted regulated entities for the purpose of those previous FRFAs, we included them in the analysis of the FRFAs because we thought that some rule changes and textual discussions in the *Fifth Report and Order* and the *Sixth Report and Order* might ultimately have some affect on equipment compliance. In the present *Memorandum Opinion and Order* we address reconsideration petitions filed in response to the *Service Reconsideration Order* and the *Allotment Reconsideration Order*. In this present Supplemental FRFA, we hereby incorporate by reference the description and estimate of the number of small entities from the previous FRFAs in this proceeding.

D. Description of Projected Reporting, Recordkeeping and Other Compliance Requirements

15. The rules adopted will result in no changes in current reporting, recordkeeping, or other compliance requirements.

E. Steps Taken to Minimize Significant Economic Burdens on Small Entities, and Significant Alternatives Considered

16. As noted in the previous FRFAs, the DTV Table of Allotments will affect all of the commercial and noncommercial broadcast television stations eligible for a DTV channel in the transition period and a significant number of the LPTV and TV translator stations. LPTV and TV translator stations, especially, are likely to be small entities. It is expected that the allotments will constitute the population of channels on which broadcasters will operate DTV service in the near future. Affected stations will need to modify or obtain new transmission facilities and, to a varying extent, production equipment to operate on the new DTV channels. The actual cost of equipment is expected to vary in accordance with the degree to which the station becomes involved in DTV programming and origination.

Considering this and other information, the Memorandum Opinion and Order makes the following changes to the Commission's DTV policies:

(1) Reaffirms the Commission's initial DTV eligibility standards and denies requests by several petitioners that we change the channel of certain DTV allotments that conflict with the NTSC allotments for which they have submitted applications or petitions for rule making. (In general, these petitioners filed applications that had not been accepted or acted upon by the Commission because they contained a request for waiver of the 1987 *Freeze Order*.) The MO&O does, however, grant the petitioners' alternative suggestion that they be permitted to modify their existing applications to specify alternative channels that do not conflict with the DTV allotments. This will allow those parties to continue to pursue their outstanding investments in seeking a new stations wherever possible.

(2) Grants Fox's request that we modify our decision to limit initial maximization requests to 200 kW, subject to certain conditions. Accordingly, the item permits parties to submit requests for DTV power increases above 200 kW, up to the 1000 kW maximum. Such requests must include an engineering showing that demonstrates compliance with the *de minimis* interference standard with all affected stations assumed to be operating at the DTV power level specified for their allotment or at 200 kW, whichever is greater. Requests will be placed on public notice for 30 days and any objections to the increase above 200 kW must be resolved by the applicant. This action will allow a number of stations to construct their initial DTV facilities with greater than 200 kW effective radiated power and thereby avoid the need for them to undertake a more costly two-stage construction process to achieve higher power in the future, after the current 200 kW limitation on power increases is lifted.

(3) Grants Dispatch's request for modification of the operating requirements for DTV stations to provide licensees with greater flexibility in scheduling their DTV operations in the early phases of the DTV implementation process. In particular, the rules have been modified to allow stations, both commercial and noncommercial, that voluntarily commence DTV service early full flexibility in determining the schedule on which they operate their DTV service. Thereafter, such stations must operate in accordance with the existing requirement that they provide at least one free over-the-air DTV video program at no charge to viewers, at any time their associated NTSC stations are operating.

(4) Grants a number of individual requests for changes in the initial DTV allotments. These actions do not alter in any significant way the previous FRFAs and Supplemental FRFAs or the potential effect of the rules on any small entities that may be subject to them.

17. The Commission will send a copy of the *Memorandum Opinion and Order*, including the Supplemental FRFA, to the Chief Counsel for Advocacy of the Small Business Administration.

Ordering Clauses

18. In accordance with the actions described herein, *it is ordered that* Part 73 of the Commission's rules *is amended* as set forth in the rule changes. In addition, *it is ordered* that the rule amendments as set forth *shall be effective* 30 days after publication in the **Federal Register**. This action is taken pursuant to authority contained in §§ 4(i), 7, 301, 302, 303, 307 and 336 of the Communications Act of 1934, as amended, 47 U.S.C. 154(i), 157, 301, 302, 303, 307 and 336.

19. *It is further ordered* that the Commission's Office of Public Affairs, Reference Operations Division, *shall send* a copy of this Memorandum Opinion and Order, including the Supplemental Final Regulatory Flexibility Analysis, to the Chief Counsel for Advocacy of the Small Business Administration.

20. For additional information concerning this matter, contact Bruce

Franca, Office of Engineering and Technology, (202) 418–2470, Alan Stillwell, Office of Engineering and Technology, (202) 418–2470, or Robert Eckert, Office of Engineering and Technology, Technical Research Branch, (202) 418–2433.

List of Subjects in 47 CFR Parts 73 and 74

Television.

Federal Communications Commission.

Magalie Roman Salas,

Secretary.

Rule Changes

Parts 73 and 74 of Title 47 of the Code of Federal Regulations are amended as follows:

PART 73—RADIO BROADCAST SERVICES

1. The authority citation for part 73 continues to read as follows:

Authority: 47 U.S.C. 154, 303, 334 and 336.

§ 73.622 [Amended]

2. Section 73.622 is amended by removing the designation ''c'' from entries in paragraph (b) to read as follows:

Under CALIFORNIA, channel 63 at Concord
Under CALIFORNIA, channel 39 at Corona
Under CALIFORNIA, channel 48 at Porterville
Under CALIFORNIA, channels 21, 35, *53 and 55 at Sacramento
Under CALIFORNIA, channel 43 at Salinas
Under CALIFORNIA, channel 61 at San Bernardino
Under CALIFORNIA, channel 41 at San Jose
Under CONNECTICUT, channel *52 at Bridgeport
Under FLORIDA, channel *44 at Boca Raton
Under FLORIDA, channel 22 at Miami
Under HAWAII, channel 31 at Honolulu
Under HAWAII, channel *7 at Lihue
Under ILLINOIS, channels 19 and 43 at Chicago
Under ILLINOIS, channel 16 at Rockford
Under INDIANA, channel 51 at Salem
Under MASSACHUSETTS, channel 29 at Worcester
Under MICHIGAN, channel *55 at East Lansing
Under MICHIGAN, channel 51 at Lansing
Under NEW HAMPSHIRE, channel *49 at Keene
Under NEW HAMPSHIRE, channel 59 at Manchester
Under NEW JERSEY, channel *18 at New Brunswick
Under NEW YORK, channel *42 at Binghamton
Under NEW YORK, channel 56 at New York
Under NEW YORK, channel 19 at Syracuse
Under NEW YORK, channel 21 at Watertown
Under OHIO, channel 42 at Sandusky
Under OHIO, channels 19 and 49 at Toledo
Under OHIO, channel 20 at Youngstown
Under PENNSYLVANIA, channel *62 at Allentown
Under PENNSYLVANIA, channel 64 at Philadelphia
Under PENNSYLVANIA, channels 25 and *26 at Pittsburgh
Under RHODE ISLAND, channel 17 at Block Island
Under TENNESSEE, channel *29 at Memphis
Under TEXAS, channel 44 at Houston
Under VIRGINIA, channel 43 at Manassas
Under VIRGINIA, channel 22 at Petersburg
Under WASHINGTON, channel 46 at Wenatchee
Under PUERTO RICO, channel *16 at Fajardo
Under PUERTO RICO, channels 29 and 35 at Mayaguez

3. Section 73.622 is amended by adding or revising the following entries in the table in paragraph (b) to read as follows:

§ 73.622 DTV Table of Allotments.

* * * * *

(b) *DTV Table of Allotments.*

* * * * *

Arizona

* * * * *

Kingman	19, *46

* * * * *

California

* * * * *

Barstow	44
Blythe	*4
Calipatria	50

* * * * *

Clovis	44c
Coalinga	*22
Concord	63c

* * * * *

Huntington Beach	*48
Long Beach	61c
Los Angeles	31c, 35c, 36, *41c, 42, 43, 53c, *59c, 60, 65c, 66

* * * * *

San Bernardino	*26, 38

* * * * *

Colorado

* * * * *

Colorado Springs	10, 22c, 24
Craig	*48
Denver	16, 17, *18, 19, 32c, 34, 35, *40, 43, 51c

* * * * *

Glenwood Springs	23, *39
Grand Junction	2, 7, 12c, 15, *17
La Junta	*30
Lamar	*50
Leadville	*49
Longmont	29

* * * * *

Florida

* * * * *

Bradenton	*5, 42

* * * * *

Live Oak	48
Marathon	*34
Melbourne	20, 48

* * * * *

Idaho

Boise	*21, 26, 28
Burley	*48
Caldwell	10c

* * * * *

Twin Falls	16, *22, 34
Weiser	*34

Illinois

* * * * *

Indiana

* * * * *

Evansville	28, 45c, 46, *54, 59

* * * * *

Iowa

* * * * *

Cedar Rapids	27, 47, 51, 52
Centerville	*44
Council Bluffs	*33c

* * * * *

Kansas

* * * * *

Garden City	16, 18, *42

* * * * *

Lawrence	36
Oakley	*40
Pittsburg	30

* * * * *

Minnesota

* * * * *

Hibbing	36, *51

* * * * *

Missouri

* * * * *

Birch Tree	*7

Bowling Green *50
Cape Girardeau 22, 57

* * * * *

Montana

* * * * *

Miles City 13, *39

* * * * *

Nevada

Elko 8, *15

* * * * *

New Jersey

Atlantic City 49, 50

* * * * *

New Mexico

* * * * *

Las Cruces *23c, 47

* * * * *

Roswell 28c, 38, 41

* * * * *

Silver City 12, *33
Socorro *31

New York

* * * * *

Oklahoma

* * * * *

Eufala *31
Guymon *29
Lawton 23

* * * * *

Texas

* * * * *

Longview 31
Lubbock 25, 27, 35c, *39, 40, 43

* * * * *

Texarkana 15, *50

* * * * *

Utah

* * * * *

Cedar City 14, 44
Monticello *41
Ogden 29, *34

* * * * *

4. Section 73.622 is amended by revising paragraph (e) to read as follows:

§ 73.622 Digital television table of allotments.

* * * * *

(e) *DTV Service Areas.* (1) The service area of a DTV station is the geographic area within the station's noise-limited F(50,90) contour where its signal strength is predicted to exceed the noise-limited service level. The noise-limited contour is the area in which the predicted F(50, 90) field strength of the station's signal, in dB above 1 microvolt per meter (dBu) as determined using the method in § 73.625(b), exceeds the following levels (these are the levels at which reception of DTV service is limited by noise):

	dBu
Channels 2–6	28
Channels 7–13	36
Channels 14–69	41

(2) Within this contour, service is considered available at locations where the station's signal strength, as predicted using the terrain dependent Longley-Rice point-to-point propagation model, exceeds the levels above. Guidance for evaluating coverage areas using the Longley-Rice methodology is provided in *OET Bulletin No. 69.* Copies of *OET Bulletin No. 69* may be inspected during normal business hours at the: Federal Communications Commission, 1919 M St., N.W., Public Reference Room (Room 239), Washington, DC 20554. This document is also available through the Internet on the *FCC Home Page* at http://www.fcc.gov.

5. Section 73.623 is amended by redesignating paragraph (f) as paragraph (g) and adding a new paragraph (f), to read as follows:

§ 73.623 DTV applications and changes to DTV allotments.

* * * * *

(f) Parties requesting new allotments on channel 6 be added to the DTV Table must submit an engineering study demonstrating that no interference would be caused to existing FM radio stations on FM channels 200–220.

* * * * *

6. Section 73.624 is amended by revising paragraph (b) to read as follows:

§ 73.624 Digital television broadcast stations.

* * * * *

(b) At any time that a DTV broadcast station permittee or licensee transmits a video program signal on its analog television channel, it must also transmit at least one over-the-air video program signal at no direct charge to viewers on the DTV channel that is licensed to the analog channel, *provided* that, before the date on which DTV station is required to be constructed under paragraph (d) of this section, the DTV broadcast station permittee or licensee is not subject to any minimum schedule for operation on the DTV channel. The DTV service that is provided pursuant to this paragraph must be at least comparable in resolution to the analog television station programming transmitted to viewers on the analog channel, but subject to paragraph (f) of this section, DTV broadcast stations are not required to simulcast the analog programming.

* * * * *

PART 74—EXPERIMENTAL RADIO, AUXILIARY, SPECIAL BROADCAST AND OTHER PROGRAM DISTRIBUTION SERVICES

7. The authority citation for part 74 continues to read as follows:

Authority: 47 U.S.C. 154, 303, 307, and 554.

8. Section 74.706 is amended by revising paragraph (d)(1) to read as follows:

§ 74.706 Digital TV (DTV) station protection.

* * * * *

(d) * * *

(1) −2 dB or less for co-channel operations. This maximum L/D ratio for co-channel interference to DTV service is only valid at locations where the signal-to-noise (S/N) ratio is 25 dB or greater. At the edge of the noise-limited service area, where the S/N ratio is 16 dB, the maximum L/D ratio for co-channel interference from analog low power TV, TV translator or TV booster service into DTV service is −21 dB. At locations where the S/N ratio is greater than 16 dB but less than 25 dB, the maximum L/D field strength ratios are found from the following Table (for values between measured values, linear interpolation can be used):

Signal-to-noise ratio(dB)	DTV-to-low power ratio (dB)
16.00	21.00
16.35	19.94
17.35	17.69
18.35	16.44
19.35	7.19
20.35	4.69
21.35	3.69
22.35	2.94
23.35	2.44
25.00	2.00

* * * * *

[FR Doc. 99–1941 Filed 1–27–99; 8:45 am]

BILLING CODE 6712–01–P

DEPARTMENT OF THE INTERIOR

Fish and Wildlife Service

50 CFR Part 18

RIN 1018–AF02

Marine Mammals; Incidental Take During Specified Activities

AGENCY: Fish and Wildlife Service, Interior.

ACTION: Final rule.

SUMMARY: The Fish and Wildlife Service hereby issues final regulations to authorize the incidental, unintentional take of small numbers of polar bears and Pacific walrus during year-round oil and gas industry (Industry) exploration, development, and production operations in the Beaufort Sea and adjacent northern coast of Alaska. We clarified types of activities covered by this incidental take authority that were identified in our proposed regulations issued on November 17, 1998 (63 FR 63812), and they are essentially identical to activities covered by our original 5-year incidental take regulations effective from December 16, 1993, through December 15, 1998. As allowed by the Marine Mammal Protection Act (Act), these final regulations are effective through January 30, 2000, during which time we will consider new information associated with sub-sea pipelines to evaluate the scope of activities that will be covered in a future rule. It is our intention next year, at a minimum, to propose to extend these regulations for an additional four years for the activities described in this rule. As noted below, these regulations do not address or authorize incidental takes resulting from sub-sea pipeline activities located offshore in the Beaufort Sea.

DATES: This rule is effective January 28, 1999 and remains effective through January 30, 2000.

ADDRESSES: Comments and materials received in response to this action are available for public inspection during normal working hours of 8 a.m. to 4:30 p.m., Monday through Friday, at the Office of Marine Mammals Management, U.S. Fish and Wildlife Service, 1011 E. Tudor Road, Anchorage, AK 99503.

FOR FURTHER INFORMATION CONTACT: John Bridges, Office of Marine Mammals Management, Anchorage, Alaska, at 907/786–3800, FAX 907/786–3816, or Internet John__Bridges@mail.fws.gov.

SUPPLEMENTARY INFORMATION:

Background

Section 101(a)(5)(A) of the Act gives the Secretary of the Interior (Secretary) through the Director of the Service the authority to allow, on request by U.S. citizens [as defined in 50 CFR 18.27(c)] engaged in a specified activity (other than commercial fishing) in a specified geographic region the incidental, but not intentional, taking of small numbers of marine mammals. We may grant permission for incidental takes for periods of up to 5 years.

If we find, based on the best scientific evidence available, that the taking of marine mammals will have a negligible impact on the species or stock and will not have an ''unmitigable adverse impact'' on the availability of the species or stock for subsistence uses, we may allow the taking of marine mammals. We then are required to publish regulations that include permissible methods of taking and other means to ensure the least practicable adverse impact on the species and its habitat and on the availability of the species for subsistence uses. These regulations must include requirements for monitoring and reporting. We issue Letters of Authorization (LOA), upon request and receipt of appropriate date, to individual entities to conduct activities pursuant to the regulations.

The term ''take'' as defined by the Act means to harass, hunt, capture, or kill, or attempt to harass, hunt, capture, or kill any marine mammal.

Harassment as defined by the Act, as amended in 1994, ''* * * means any act of pursuit, torment, or annoyance which—

(i) Has the potential to injure a marine mammal or marine mammal stock in the wild; or

(ii) Has the potential to disturb a marine mammal or marine mammal stock in the wild by causing disruption of behavioral patterns, including, but not limited to, migration, breathing, nursing, breeding, feeding, or sheltering.''

As a result of 1986 amendments to the Act, we published a final rule on September 29, 1989, (54 FR 40338), amending 50 CFR 18.27 (i.e., regulations governing small takes of marine mammals incidental to specified activities). The final rule in § 18.27(c) included, among other things, a revised definition of ''negligible impact'' and a new definition for ''unmitigable adverse impact'' as follows. ''Negligible impact is an impact resulting from the specified activity that cannot be reasonably expected to, and is not reasonably likely to, adversely affect the species or stock through effects on annual rates of recruitment or survival * * *. Unmitigable adverse impact means an impact resulting from the specified activity (1) that is likely to reduce the availability of the species to a level insufficient for a harvest to meet subsistence needs by (i) causing the marine mammals to abandon or avoid hunting areas, (ii) directly displacing subsistence users, or (iii) placing physical barriers between the marine mammals and the subsistence hunters; and (2) that cannot be sufficiently mitigated by other measures to increase the availability of marine mammals to allow subsistence needs to be met.''

Oil and gas exploration, development, and production activities conducted in marine mammal habitat risk violating the moratorium on the taking of marine mammals and, therefore, violating the terms of the Act. Although there is no legal requirement for Industry to obtain incidental take authority, they have chosen to seek authorization to avoid the uncertainties of conducting oil and gas industry activities in marine mammal habitat.

On December 17, 1991, BP Exploration (Alaska), Inc. (BPXA), for itself and on behalf of Amerada Hess Corporation, Amoco Production Company, ARCO Alaska, Inc., CGG American Service, Inc., Conoco Inc., Digison Geophysical Corp., Exxon Corporation, GECO Geophysical Co., Halliburton Geophysical Services, Inc., Mobil Oil Corporation, Northern Geophysical of America, Texaco Inc., Unocal Corporation, and Western Geophysical Company, petitioned us to promulgate regulations pursuant to section 101(a)(5) of the Act.

The geographic region defined in Industry's 1991 application included offshore waters beginning at a north/south line at Barrow, Alaska, east to the Canadian border, including all Alaska state waters and OCS waters. The same north/south line at Barrow, extending 25 miles inland and east to the Canning River defined the onshore region. The Arctic National Wildlife Refuge was excluded from Industry's proposal; and it was also excluded from our subsequent final remaking actions in 1993 and 1995, as briefly described in the next paragraph.

On November 16, 1993 (58 FR 60402), we issued final regulations to allow the incidental, but not intentional, take of small numbers of polar bears and Pacific walrus in the event that such taking(s) occurred in the course of Industry activities during year-round operations in the Beaufort Sea, in Alaskan State waters and Outer Continental Shelf (OCS) waters and the adjacent northern coast of Alaska. The regulations were

issued for a period of 18 months. At the same time, the Secretary of the Interior directed us to develop, then begin implementation of, a polar bear habitat conservation strategy prior to extending the regulations beyond the initial 18 months for a total 5-year period as allowed by the Act. We developed *The Habitat Conservation Strategy for Polar Bears in Alaska* to ensure that the regulations fully met with the intent of the *1973 International Agreement on the Conservation of Polar Bears.* On August 17, 1995, we issued the final rule and notice of availability of a completed final polar bear habitat conservation strategy (60 FR 42805); and we extended the regulations for an additional 42 months to expire on December 15, 1998.

Summary of the Current Rulemaking Action

On August 28, 1997, BPXA submitted a petition for rulemaking pursuant to section 101(a)(5)(A) of the Act, and section 553(e) of the Administrative Procedure Act (APA). Their request sought regulations to allow the incidental, but not intentional, taking of small numbers of polar bears and Pacific walrus in the event that takings occurred in the course of Industry operations in Arctic Alaska. Specifically, BPXA requested an extension of the incidental take regulations beginning at 50 CFR 18.121 for an additional five-year term from December 16, 1998, through December 15, 2003. However, the petition for new regulations includes two new oil fields (Liberty and Northstar). Plans to develop each field identify need for an offshore gravel island and a buried sub-sea pipeline to transport crude oil to connect with existing facilities. The request was submitted by BPXA for itself and on behalf of ARCO Alaska, Inc., Exxon Corporation, and Western Geophysical Company.

The geographic extent of this request was the same as that of our previously issued regulations beginning at 50 CFR 18.121 that were in effect through December 15, 1998, a north/south line at Barrow, Alaska, including all Alaska State waters and OCS waters, and east of that line to the Canadian border; with the onshore region being the same north/south line at Barrow, 25 miles inland and east to the Canning River. The Arctic National Wildlife Refuge was excluded from the proposal.

In response to Industry's 1997 application, on November 17, 1998, we published proposed specific regulations (63 FR 63812) to allow the incidental, unintentional take of polar bears and Pacific walrus in the Beaufort Sea and northern coast of Alaska. The proposed regulations were to be in effect year-round for a five year period expected to begin at the December 15, 1998, expiration of our incidental take regulations that began at 50 CFR 18.121 for entities conducting oil and gas industry activities. However, information related to sub-sea pipelines is in Draft Environmental Impact Statements and is preliminary. Currently, two Environmental Impact Statements are being finalized; one by the U.S. Army Corps of Engineers for the Northstar Project, and one by the Minerals Management Service (MMS) for the Liberty Project. Once these documents are final, we will be better positioned to make a finding based on the latest scientific and engineering information. Therefore the issuance of these one year final regulations will not address or authorize the incidental take of polar bears and Pacific walrus during construction or operations of sub-sea pipelines in the Beaufort Sea.

These regulations do not permit the actual activities associated with oil and gas exploration, development, and production, but rather allow the incidental, unintentional take of polar bears and Pacific walrus that is associated with the described activities. The Department of the Interior's MMS and the Bureau of Land Management are responsible for permitting activities associated with oil and gas activities in Federal waters and on Federal lands, respectively, and the State of Alaska is responsible for activities on State lands and in State waters.

Concern has been directed at polar bear encounter incidents where human life is in jeopardy. When human activity occurs in polar bear habitat, polar bear/human encounters are possible. However, during more than 25 years of industry activity in this area, only three polar bears have died as a result of industrial activity. Each person operating under these regulations will have polar bear interaction training and knowledge of polar bear interaction plans. We authorize deterrent activities under section 109(h)(1) of the Act, while lethal take is authorized in defense of self or others in accordance with section 101(c) of the Act.

The regulations authorize the incudental take of polar bears and Pacific walrus associated with incidents that occur between Industry and the two species during year-round oil and gas activities that might cause minor disturbances to polar bears or Pacific walrus, especially those incidents that may occur in the absence of any negligence or intentional action by a person carrying out an otherwise lawful activity.

The regulations include requirements for monitoring and reporting, and measures to effect the least practicable adverse impact on these species and their habitat and on the availability of these species for subsistence uses. Oil and gas exploration, development, and production activities in the geographic area applicable to this effort may involve the taking of polar bears and Pacific walrus. However, we have made a finding that the total impact of the takings have a negligible impact on these species and on their availability for subsistence uses. Monitoring reports submitted for each exploration, development, and production activity conducted from 1993–1997 support this finding.

The rule requires a person to obtain a LOA to conduct exploration, development, and production activities pursuant to the regulations. Where there is the likelihood of taking polar bear or walrus when carrying out one or more of these activities, each group or individual conducting an oil and gas industry-related activity may request a LOA. Further, applicants for LOAs must submit a plan to monitor the effects on polar bear and walrus that are present during the authorized activities. Also, applicants for LOAs must identify, in a Plan of Cooperation, measures taken to minimize adverse impacts on the availability of marine mammals for subsistence uses if the activity takes place in or near a traditional subsistence hunting area. Each request for a LOA is evaluated on the specific activity and the specific location, and we condition each LOA for that activity and location if necessary.

Description of Activity

As allowed by section 101(a)(5)(A) of the Act, this final rule is effective through January 30, 2000. Activities that are covered in this final rule are exploration activities such as geological and geophysical surveys which include: geotechnical site investigation, reflective seismic exploration, vibrator seismic data collection, air gun and water gun seismic data collection, explosive seismic data collection, geological surveys, and drilling operations. The latter include: drill ships, floating drill platforms such as the Kulluk, ice pads, artificial islands, caisson-retained islands, and two types of bottom founded structures: (1) Concrete island drilling system, and (2) single steel drilling caisson. This rule does not authorize incidental take of polar bears or Pacific walrus by activities associated with sub-sea pipelines.

Development and production activities are located on the North Slope along the shores of the Beaufort Sea. This region contains more than 11 separate oil and gas fields. All of the fields lie within the range of polar bears, while those in the offshore/near shore may encounter Pacific walrus on an irregular basis. At present, seven fields are in production: Prudhoe Bay, Kuparuk, Endicott, Lisburne, Milne Point, Niakuk, and Point McIntyre. Additional fields expected to be in production over the next few years are Northstar, Badami, Liberty, Tarn, and Alpine. The Trans-Alaska Pipeline System transports oil from each of the producing fields 800 miles south to Valdez, Alaska.

As mentioned above, this final rule does not authorize incidental takes of polar bears or Pacific walrus from any sub-sea pipeline activity. While Industry's original August 28, 1997, application briefly discussed its plans to develop the offshore Northstar and Liberty sites and sub-sea pipelines, the actual construction and use of sub-sea pipelines to transport oil is an activity that we did not examine during our prior, 1993 final rulemaking. This precludes us at this time from making any findings about sub-sea pipelines. Upon completion of the two environmental impact statements addressing this new activity, we will reconsider the best available scientific information and reevaluate the scope and duration of a future rulemaking. Therefore, although incidental take from other development and production activities, such as the construction and use of gravel islands and ice roads, is covered by this rule, any incidental take resulting from the construction or use of sub-sea pipelines is not covered by this rule. We have made no decision on the eligibility of sub-sea pipelines to be included in a rulemaking under section 101(a)(5) of the Act, and nothing in this rule or in any LOA issued under this rule should be interpreted as creating an expectation that incidental take authority will be granted for sub-sea pipeline activities at a future date.

Potential sources of incidental take are noise, physical interactions, and permitted and unpermitted discharges (oil spills). Oil and gas well drilling operations will include artificial islands, caisson-retained islands, ice island, bottom-founded structures and ice pads and drill ships.

During the life of the regulations, we anticipate a similar level of activity as during the previous five years, with the addition of a number of new developments as mentioned above. Because of the large number of variables influencing exploration activity, any predictions as to the exact dates and locations of the operations that will take place over the next year would be highly speculative. However, requests for LOAs must include specific details regarding dates, duration, and geographic locations of proposed activities.

Biological Information

Polar bears and Pacific walrus utilize the area as habitat which is vital to their survival, more so for polar bears than the Pacific walrus. The geographic area is the land and water area east of a north/south line through Barrow, Alaska. The onshore area is 25 miles inland and east to the Canning River. The Arctic National Wildlife Refuge is outside of the area. Offshore, the area extends through Alaska State waters and into the OCS waters of the Beaufort Sea from Barrow east to the Canadian border.

Pacific Walrus

The Pacific walrus primarily occurs in the waters of the Chukchi Sea along the western coast of Alaska. Most of the population congregates near the ice edge of the Chukchi Sea pack ice during the summer. The primary summer range of the walrus does not extend east of Point Barrow. In the winter, walrus occur in areas where there are polynyas, open leads, or thin ice in which they can create and maintain breathing holes, and major winter concentrations occur in the southeastern Bering Sea. Walrus do occur in the Beaufort Sea but in small numbers. Data from our Marking, Tagging, and Reporting Program show that from 1994 through 1997, 73 walrus were reported killed by Barrow hunters. Tagging certificates shows that nearly all walrus were taken west of Barrow. Based on four years of monitoring Industry's activities in the Beaufort Sea required as a condition to LOAs, only two walrus were observed by on-site monitors.

Polar Bear

Polar bears occur only in the Northern Hemisphere, where their distribution is circumpolar, and they live in close association with polar ice. In Alaska, their distribution extends from south of the Bering Strait to the U.S.-Canada border. We estimate the world population at 21,000–28,000, with possibly as many as 5,000 bears in Alaska. The most extensive north-south movements of polar bears occur with the ice in the spring and fall.

Females without dependent cubs breed in the spring and enter maternity dens by late November. Females with cubs do not mate. An average of two cubs, sometimes one and rarely three, are usually born in December, and the family group emerges from the den in late March or early April. Only pregnant females den for an extended period during the winter. Other polar bears may burrow out depressions to escape harsh winter winds. The average reproduction interval for polar bear is 3–4 years. The maximum reported age of reproduction in Alaska is 18 years. Based on these conditions, a polar bear may produce about ten cubs in her lifetime.

The fur and blubber of the polar bear provide vital protection from the cold air and frigid water. Newly emerged cubs of the year may not have a sufficient layer of blubber to maintain body heat when immersed in water for long periods of time. For this reason, the mother is very protective of the cubs. Cubs abandoned prior to the normal weaning age of 2.5 years likely will not survive.

Ringed seals (*Phoca hispida*) are the primary prey species of the polar bear; occasionally, they hunt bearded seals (*Erignathus barbatus*) and walrus calves. Polar bears scavenge on marine mammal carcasses washed up on shore. They also eat non-food items such as Styrofoam, plastic, car-batteries, anti-freeze, and lubricating fluids.

Polar bears have no natural predators, and they do not appear to be prone to death by diseases or parasites. The most significant source of mortality are humans. Since 1972, with the passage of the Act, only Alaska Natives hunt polar bears in Alaska and use bears for their subsistence needs and manufacture of handicraft and clothing items. The Native harvest occurs without restrictions on sex, age, number, or season, providing takes are non-wasteful. From 1980–1997, the total annual harvest averaged 103 bears. The majority of this harvest (70 percent) came from the Chukchi Sea area.

Effects of Oil and Gas Industry Activities on Marine Mammals and on Subsistence Uses

Walrus

Oil and gas industry activities such as air and vessel traffic, noise from air traffic, seismic surveys, ice breakers, supply ships and drilling may frighten or displace walrus. However, as previously stated in this document, the primary range of the Pacific walrus is west of Point Barrow and the likelihood of many walrus being in the Beaufort Sea is small. Therefore, it is unlikely that oil and gas industry activities will result in more than a negligible impact

on the species. Likewise, activities during the ice covered periods and the onshore development and production activities should not impact the species.

Stationary drilling structures may affect the movement of walrus. Walrus are attracted to certain activities or repelled from others by noise or smell. In the 1989 drilling season an incident occurred in a Chuckchi Sea operation where a young walrus surfaced in the center hole (moonpool) of the drill ship. A cargo net removed the walrus from the drilling area, after which the walrus left the scene of the incident and was not seen again.

The majority of the population congregates during the summer months (open water season) in the southern region of the Chukchi Sea pack ice between Long Strait and Wrangel Island to the west and Point Barrow, Alaska, to the east. These animals stray or are blown by storms into the proposed regulation area. The remainder of the population, primarily adult males, stay in the Bering Sea, Especially along the Anadyr Gulf coast and in several areas in northern Bristol Bay.

In winter, walrus are found in two major regions where open leads, polynyas, or thin ice occur. Generally, one group ranges from the Gulf of Anadyr into the region southwest of St. Lawrence Island, and a second group is found in the southeastern Bering Sea from south of Nunivak Island into northwestern Bristol Bay. No impacts to walrus are expected during winter oil and gas industry activities since the winter range of the Pacific walrus is not within the geographic area covered by these regulations.

Seismic surveys generally take place on solid ice or open water. Since most walrus activity occurs near the ice edge, interactions with walrus and the seismic activity are unlikely.

Subsistence

Few walrus are harvested in the Beaufort Sea along the northern coast of Alaska. Walrus constitute a small portion of the harvest for the village of Barrow. For the four year period that the current incidental take regulations have been in place and for which data is available, 1994 through 1997, 73 walrus were reported taken by Barrow hunters. Reports indicate that all but one of the 73 walrus were taken west of Point Barrow, outside the limits of the incidental take regulations. Hunters from Nuiqsut and Kaktovik have not reported taking any walrus during this time.

Polar Bear

Oil and gas exploration, development, and production activities in the Beaufort Sea and adjacent northern coast of Alaska may affect the polar bear. Drill ships and icebreaker activity may be physical obstructions to normal movement. Noise, sights, and smells produced by activities may attract or repel bears. These disruptions may introduce detrimental changes in the bears' natural behavior.

Exploration activities during the open-water season are not likely to impact the movements or natural behavior of the polar bear. Although polar bears have been documented in open water, miles from the ice edge or ice floes, they normally are found near the ice edge. Therefore, it is unlikely that exploration activities in the open-water season will have more than a negligible impact on the polar bear.

Winter oil and gas activities have a greater possibility of having detrimental impacts on the polar bear. Polar bears that continue to move over the ice pack throughout the year are likely to encounter Industry activities.. Curious polar bears are likely to investigate drill ships and artificial or natural islands where drilling operations occur. Any on-ice activity creates an opportunity for Industry/bear interactions.

Offshore drill sites within the pack ice may modify the habitat by creating open water leads down current from the activity. Polar bears are attracted to open water leads which create temporary niches for subadult or non-breeding ringed seals, the primary prey species for the polar bear. Polar bears attracted to these artificial open water leads create possibilities of Industry/polar bear encounters.

Polar bear interaction plans are developed for each operation. Industry personnel participate in a polar bear interaction training program while on -site. These training programs and interaction plans insure that the activity and possible interactions have the least detrimental effect on industry personnel and the polar bear. Occasionally, work is performed on ice adjacent to elevated drill ships or platforms. In such cases, well-lighted and open work areas are provided to reduce the likelihood of an encounter with an undetected polar bear.

Winter seismic activity (survey crews) have a potential of disturbing denning females which are sensitive to noise disturbances. Denning females may stop seeking a preferred denning site, or may abandon dens, thereby risking the lives of their offspring. Prior to initiating seismic survey activity, Industry provides us with its proposed survey route. Through satellite observations of radio collared bears, we are able to inform Industry of known denning sites, and from knowledge of the geographic area, we can identify areas of probable denning sites. Likewise, cooperative research Industry in the development of Forward Looking Infrared Radar shows promise of detecting polar bears in maternity dens. Industry also cooperates with us to alter survey routes to pass within no less than one mile of denning sites. As a result of the ongoing cooperative operating procedures, Industry activities avoid known den sites in response to required Letter of Authorization conditions.

Subsistence

The polar bear is not a primary subsistence species of the villages of Barrow, Nuiqsut, or Kaktovik. Preliminary data from our Marking, Tagging, and Reporting Program indicate that from July 1, 1993, to June 30, 1997, a total of 83 polar bears were reported harvested by the Natives of Barrow, 5 polar bears from the village of Nuiqsut; and 9 polar bears from the village of Kaktovik. Hunting success varies considerably from year-to-year because of variable ice and weather conditions.

Industry works with the local Native groups to achieve a cooperative relationship between oil and gas activities and subsistence activities. It is assumed that oil and gas exploration, development, and production will not have more than a negligible impact on subsistence activities.

Oil Spills

The accidental discharge of oil into the environment during Industry activities could result from operational spills during refueling, handling of lubricants and liquid products, and during general maintenance. The spills are small in quantity, generally less than a barrel of oil per incident. Drilling units maintain onboard cleanup equipment and train personnel to handle operational spills. These spills do not pose a threat to polar bear or walrus.

A blowout (i.e., the loss of control during drilling) is a potentially more serious type of spill accident. However, based on data calculated by the MMS, the probability of a major blowout in the Beaufort Sea is extremely low; data compiled by that agency verify that although blowouts occur during exploratory drilling on the OCS, no oil has been spilled. This data set includes all blowouts including those caused by gas or water, as well as oil. All blowouts

do not necessarily result in the release of oil. Sub-sea pipeline oil release probabilities are not included in this data.

Swimming polar bears are directly impacted by contracting oil-contaminated waters. Bears that are fouled by oil may suffer thermoregulatory problems, ingest oil, and exhibit other detrimental effects such as inflammation of the nasal passages or damage to their renal and central nervous system.

We acknowledged that while there is a low probability of oil spills connected with a blowout, the potential negative effects to polar bears or their habitats may be significant. Bears that contact oil are likely to die. We balance the probability of an oil spill with the potential severity of harm to the species or stock when determining negligible impact.

Due to the small number of walrus in the Beaufort Sea area, impacts resulting from oil spills are foreseen as negligible.

Conclusions

Based on the previous discussion and recent years' monitoring program results, we make the following findings regarding the actions.

Impact on Species

We find, based on the best scientific information available and the results of four years of monitoring data, the effects of oil and gas related exploration, development, and production activities for the next one year in the Beaufort Sea and adjacent northern coast of Alaska will have a negligible impact on polar bears and Pacific walrus and their habitat and on the availability of these species for subsistence uses if certain conditions are met. Oil and gas activities have occurred in the Beaufort Sea and the adjacent northern coast of Alaska for many years. To date, there has been only one documented case of a lethal take of a polar bear at an exploratory drill site. In the event of a catastrophic spill, we would reassess the impacts to the polar bear and/or walrus populations and reconsider the appropriateness of authorizations for taking through section 101(a)(5)(A) of the Act.

Our finding of ''negligible impact'' applies to exploration, development, and production related to oil and gas activities, excluding any production activities associated with sub-sea pipelines. The following are generic conditions intended to minimize interference with normal breeding, feeding, and possible migration patterns to ensure that the effects to the species remain negligible. We may expand the conditions in the LOAs based upon site-specific and species-specific reasons.

(1) These regulations to not authorize intentional taking of polar bear or walrus. When an intentional take (e.g., harassment associated with deterrent activities and/or lethal take) situation arises, we can allow such action under authority of sections 109(h)(1) or 101(c) of the Act.

(2) For the protection of pregnant polar bears during denning activities (selection, birthing, and maturation of cubs) in known and confirmed denning areas, Industry activities will be restricted in specific locations during certain specified times of the year. These restrictions will be applied on a case-by-case basis in response to a request for each LOA. In potential denning areas, pre-activity surveys, as determined by us, may be required to determine the presence or absence of denning activity.

(3) Each activity authorized by a LOA requires a site-specific plan of operation, and a site-specific monitoring and reporting plan. The purpose of the required plans is to ensure that the level of activity and possible takes will be consistent with the finding that the cumulative total of takes will have a negligible impact on polar bear and Pacific walrus, their habitat, and where relevant, on the availability of the species for subsistence uses.

Impact on Subsistence

Polar bear and Pacific walrus contribute a small amount of the total subsistence harvest for the villages of Barrow, Nuiqsut, and Kaktovik. However, this does not mean that the harvesting of these species is not important to Alaska natives. To ensure that the impact of oil and gas activity on the availability of the species or stock for subsistence uses is negligible, prior to receipt of a LOA, Industry must provide evidence to us that a plan of cooperation has been presented to the subsistence communities, the Eskimo Walrus Commission, the Alaska Nanuuq Commission, and the North Slope Borough. This plan of cooperation will provide the procedures on how Industry will work with the affected Native communities and what actions will be taken to avoid interference with subsistence hunting of polar bear and walrus.

If there is evidence that oil and gas activities will affect, or in the future may affect, the availability of polar bear or walrus for subsistence, we will reevaluate our findings regarding permissible limits of take and the measures required to ensure continued subsistence hunting opportunities.

Monitoring and Reporting

The purpose of the monitoring program is to determine short-term and direct effects of authorized oil and gas activities on polar bear and walrus in the Beaufort Sea and the adjacent northern coast of Alaska. Plans must identify the methods used to assess the effects on the movements, behavior, and habitat use of polar bear and walrus in response to Industry's activities. Monitoring activities are summarized and reported each year, and reviewed by us. We base each year's monitoring objective on the previous year's monitoring results.

We require an approved plan for monitoring and reporting the effects of oil and gas industry exploration, development, and production activities on polar bear and walrus prior to issuance of a LOA. The applicant must submit an annual monitoring and reporting plan, at least 90 days prior to initiation of proposed activity, for each exploratory activity; and the applicant must submit a final monitoring report to us no later than 90 days after completion of the exploratory activity. Since development and production activities are continuous long-term activities, upon approval, LOAs and their required monitoring and reporting plans will be issued for the life of the activity or until expiration of the regulations, whichever occurs first. We will require that the operator submit development and production activity monitoring results associated with LOAs annually for our review no later than January 15 for the previous activity. We require annual approval of the monitoring results for continued operation under the LOA.

Discussion of Comments on the Proposed Rule

The proposed rule, and request for comments was published in the **Federal Register** (63 FR 63812) on November 17, 1998. The closing date for comments was December 11, 1998. We received 228 comments and the following primary issues were raised by the majority of the commenters.

Comment: Commenters believed that the Service should prepare a full Environmental Impact Statement (EIS).

Response: Through the preparation of an Environmental Assessment (EA), we found that the final rule will not significantly affect the quality of the human environment, thereby resulting in a ''Finding Of No Significant Impact (FONSI).'' Therefore, in accordance with the national Environmental Policy Act, no EIS is required. The Service's analysis in the Final EA found that

these regulations, which exclude sub-sea pipelines, would not have a significant impact on a species or stock. A one year final rule anticipates that the two Final EIS's, Northstar and Liberty, will provide us with additional information for reconsideration of the scope and duration of the regulations.

Comment: Commenters were concerned about allowing incidental take associated with sub-sea pipelines stating that sub-sea pipelines are an unprecedented expansion into the Beaufort Sea.

Response: We made the decision to issue one year regulations. Information in two Draft Environmental Impact Statements on the effect of oil spilled from sub-sea pipelines on polar bears is preliminary. After the Environmental Impact Statements are final, we will consider the best available scientific information and reevaluate the scope and duration of a future rulemaking. Incidental take resulting from the construction or operation of sub-sea pipelines is not covered by this rule.

Comment: Commenters stated that the regulations should exclude the Beaufort Sea area offshore of the Arctic National Wildlife Refuge and the refuge itself.

Response: The Arctic National Wildlife Refuge is excluded from this rulemaking. Also Lease Sale 170 does not allow further oil and gas leasing in the Outer Continental Shelf area offshore of the Arctic National Wildlife Refuge. However, some oil and gas industry activity may occur in this area due to existing leases. The area from the coast to 3 miles out is State of Alaska waters. A State of Alaska lease sale is planned for this area in the future. By regulations being implemented, we will have more access to oil and gas operations off the coast of the refuge to monitor and mitigate potential impacts through the Letter of Authorization process.

Comment: Commenters stated that the regulations should increase the level of protection in Important Habitat Areas designated in our Habitat Conservation Strategy for Polar Bears in Alaska.

Response: Important habitat areas are presently protected through the Letter of Authorization process. LOAs are conditioned to insure the safety of polar bear denning activities.

Comment: Commenters stated that the comment period was too short.

Response: The length of the comment period was derived in consideration of the then approaching expiration on December 15, 1998, of incidental take regulations beginning at 50 CFR 18.121 that have governed Industry operations in the Beaufort Sea since December 1993, and we received extensive public input. These new regulations allow activities that are identical to the regulations that Industry has operated under for the past five years. Also, this final rule is issued for only one year. No later than the end of this one year period, we will conduct another rulemaking process with full public review.

Required Determinations

We have prepared an Environmental Assessment (EA) in conjunction with this rulemaking and concluded in a Finding of No Significant Impact (FONSI) that this is not a major Federal action significantly affecting the quality of the human environment within the meaning of section 102(2)(C) of the National environmental Policy Act of 1969. For a copy of the EA and FONSI, contact the person in Alaska identified above in the section entitled, **FOR FURTHER INFORMATION CONTACT.**

This rulemaking is not a significant rule and was not subject to OMB review under Executive Order 12866.

We have determined that this rule is not a major rule under 5 U.S.C. 804(2), the Small Business Regulatory Enforcement Fairness Act. The regulations are not likely to result in: (1) An annual effect on the economy of $100 million or more. Expenses will be related, but not necessarily limited, to development of applications for regulations and LOAs, to monitoring, record keeping, and reporting activities conducted during industry oil and gas operations, development of polar hear interaction plans, and coordination with Alaska Natives to minimize effects of operations on subsistence hunting. Compliance with the rule is not expected to result in additional costs to Industry that it has not already been subjected to for the previous five years. Realistically, these costs are minimal in comparison to those related to actual oil and gas exploration, development, and production operations. The actual costs to Industry to develop the petition for promulgation of regulations and LOA requests probably does not exceed $500,000 per year, far short of the $100 million ''major rule'' threshold that would require preparation of a regulatory impact analysis. It should be pointed out that without specific regulations and LOAs, the cost to Industry resulting from lost profits, relinquishing leases earlier than expected, and writing off bonus payments against current income; and the cost to American society resulting from lost royalties and tax payments might be substantial if incidental takes were to occur and legal challenges succeeded in long-term stoppages of oil and gas operations on Federal and State lands and waters. Such stoppages are unlikely, but if any cessation of activities did occur, they likely would be short-term and would not have an annual effect on the economy surpassing $100 million. On the contrary, the most likely regulatory scenario finds a rule imposing relatively minor costs. Such a rule would be unlikely to force firms to cease operations. As is presently the case, profits would accrue to Industry; royalties and taxes would accrue to the Government; and the rule would have little or no impact on decisions by Industry to relinquish tracts and write off bonus payments; (2) a major increase in costs or prices for consumers, individual industries, or government agencies; or (3) significant adverse effects on competition, employment, productivity, innovation, or on the ability of United States-based enterprises to compete with foreign-based enterprises in domestic or export markets.

We have also determined that this final rule will not have a significant economic effect on a substantial number of small entities under the Regulatory Flexibility Act, 5 U.S.C. 601 *et seq.* Oil companies and their contractors, conducting exploration, development, and production activities in Alaska have been identified as the only likely applicants under the regulations. These potential applicants have not been identified as small businesses. The analysis for this rule is available from the person in Alaska identified above in the section entitled, **FOR FURTHER INFORMATION CONTACT.**

This final rule is not expected to have a potential takings implication under Executive Order 12630 because it would authorize incidental, but not intentional, take of polar bear and walrus by oil and gas industry companies and thereby exempt them from civil and criminal liability. The final rule also does not contain policies with Federalism implications sufficient to warrant preparation of a Federalism Assessment under Executive Order 12612.

The Solicitor's Office has determined that these regulations meet the applicable standards provided in sections 3(a) and 3(b)(2) of Executive Order 12988.

The reinstatement of authority (under OMB Number 1018–0070) to collect information contained in this rule was submitted to the OMB for approval under the Paperwork Reduction Act (44 U.S.C. 3501 *et seq.*). On April 1, 1998, we published a notice in the **Federal Register** with a 60-day comment period

announcing to the public its intention to seek OMB approval for the collection of information associated with this rulemaking. On September 22, 1998, we published a **Federal Register** notice with 30-day comment period announcing to the public that this collection of information had been submitted to the OMB for reinstatement. On October 24, 1998, the OMB granted approval of our request for reinstatement of this information collection requirement.

The Administrative Procedure Act, 5 U.S.C. 553(d), generally requires that the effective date of a final rule not be less than 30 days from publication date of the rule. Section 553(d)(1) provides that the 30 day period may be waived if the rule grants or recognizes an exemption or relieves a restriction. Since this rule relieves certain restrictions concerning take of marine mammals, and the previous exemption has expired, the Service has determined that this final rule should be made effective upon the date of publication.

List of Subjects in 50 CFR Part 18

Administrative practice and procedure, Alaska, Imports, Indians, Marine mammals, Oil and gas exploration, Reporting and record keeping requirements, Transportation.

For the reasons set forth in the preamble, the Service amends part 18, subchapter B of Chapter I, Title 50 of the Code of Federal Regulations as set forth below:

PART 18—MARINE MAMMALS

1. The authority citation for 50 CFR part 18 continues to read as follows:

Authority: 16 U.S.C. 1361 *et seq.*

2. Revise subpart J to read as follows:

Subpart J—Taking of Marine Mammals Incidental to Oil and Gas Exploration, Development and Production Activities in the Beaufort Sea and Adjacent Northern Coast of Alaska

18.121 What specified activities does this rule cover?
18.122 In what specified geographic region does this rule apply?
18.123 When is this rule effective?
18.124 How do I obtain a Letter of Authorization?
18.125 What criteria do we use to evaluate Letter of Authorization requests?
18.126 What does my Letter of Authorization allow?
18.127 What activities are prohibited?
18.128 What are the monitoring and reporting requirements?
18.129 What are the information collection requirements?

Subpart J—Taking of Marine Mammals Incidental to Oil and Gas Exploration, Development and Production Activities in the Beaufort Sea and Adjacent Northern Coast of Alaska

§ 18.121 What specified activities does this rule cover?

Regulations in this subpart apply to the incidental, but not intentional, take of polar bear and Pacific walrus by U.S. citizens (as defined in § 18.27(c)) engaged in oil and gas exploration, development, and production activities in the Beaufort Sea and adjacent northern coast of Alaska. These regulations do not apply to the incidental, unintentional take of polar bear and Pacific walrus resulting from sub-sea pipelines offshore in the Beaufort Sea, and subsequent production and transport of oil through sub-sea pipelines to tie in with onshore facilities. These regulations and any authorizations under these regulations do not constitute approval of future sub-sea pipeline construction and operation activities.

18.122 In what specified geographic region does this rule apply?

This rule applies to the specified geographic area defined by a North/South line at Barrow, Alaska, and includes all Alaska coastal areas, State waters, and Outer Continental Shelf waters east of that line to the Canadian border and an area 25 miles inland from Barrow on the west to the Canning River on the east. The Arctic National Wildlife Refuge is excluded from this rule.

§ 18.123 When is this rule effective?

Regulations in this subpart are effective January 28, 1999 through January 30, 2000, for year-round oil and gas exploration, development, and production activities.

§ 18.124 How do I obtain a Letter of Authorization?

(a) You must be a U.S. citizen as defined in § 18.27(c) of this part.

(b) If you are conducting an oil and gas exploration, development, or production activity in the geographic area described in § 18.122 that may take a polar bear or Pacific walrus in execution of those activities, you should apply for a Letter of Authorization for each exploration activity or a Letter of Authorization for each development and production area. You must submit the application for authorization to our Alaska Regional Director at least 90 days prior to the start of the proposed activity.

(c) Your application for a Letter of Authorization must include the following information:

(1) A description of the activity, the dates and duration, the specific location and the estimated area affected by that activity;

(2) A site-specific plan to monitor the behavior and effects of the activity on polar bear and Pacific walrus that are present during the on-going activities. Our Alaska Regional Director must approve your plan which identifies the survey techniques that determine the actions of the polar bear and Pacific walrus in response to the on-going activity. Your monitoring program must document the actions of these marine mammals and estimate the actual level of take. The monitoring requirements will vary depending on the activity, the location, and the time.

(3) A polar bear awareness and interaction plan if the activity is on ice or in an area of active ice movement. For the protection of human life and welfare, each employee on site must complete a basic polar bear encounter training course.

(4) A Plan of Cooperation to mitigate potential conflicts between the proposed activity and subsistence hunting. This Plan of Cooperation must identify measures to minimize adverse effects on the availability of polar bear and Pacific walrus for subsistence uses if the activity takes place in or near a traditional subsistence hunting area. You should contact affected subsistence communities to discuss potential conflicts with the location, timing, and methods of proposed operations. You must make reasonable efforts to assure that Industry activities do not interfere with subsistence hunting or that adverse effects on the availability of polar bear or Pacific walrus are properly mitigated.

(d) We will evaluate each request for a Letter of Authorization based on the specific activity and the specific geographic location. Each Letter of Authorization will identify allowable conditions or methods that are specific to the activity and location.

§ 18.125 What criteria do we use to evaluate Letter of Authorization requests?

When you request a Letter of Authorization, we will determine whether the level of activity identified in the request exceeds that considered by us in making a finding of negligible impact on the species and a finding of no unmitigable adverse impact on the availability of the species for subsistence. If the level of activity is greater, we will re-evaluate our findings to determine if those findings continue to be appropriate based on the greater level of activity. Depending on the results of the evaluation, we may allow the authorization to stand as is, add

further conditions, or withdraw the authorization.

§ 18.126 What does my Letter of Authorization allow?

(a) Depending on your application for incidental take authority, your Letter of Authorization (see § 18.124) allows the incidental, but not intentional, take of polar bear and Pacific walrus when you are carrying out one or more of the following activities:

(1) Conducting geological and geophysical surveys;

(2) Drilling exploratory wells and associated activities;

(3) Developing oil fields and associated activities; and

(4) Drilling production wells and performing production support operations, except the construction and operation of sub-sea pipelines.

(b) You must conduct methods and activities identified in your Letter of Authorization in a manner that minimizes to the greatest extent practicable adverse impacts on polar bear and Pacific walrus, their habitat, and on the availability of these marine mammals for subsistence uses.

§ 18.127 What activities are prohibited?

(a) You may not intentionally take polar bear or Pacific walrus under these regulations. Under section 109(h)(1) and section 101(c) of the Marine Mammal Protection Act, we may authorize intentional take (e.g., harassment associated with deterrent activities, and taking in defense of self or others).

(b) Letters of Authorization prohibit any take that fails to comply with the terms and conditions of these specific regulations.

(c) This rule does not authorize the incidental take of polar bear and Pacific walrus during sub-sea pipeline activities.

(d) In accordance with § 18.27(f) of this part, we will make decisions concerning withdrawals of Letters of Authorization, either on an individual or class basis, only after notice and opportunity for public comment. This requirement for notice and public comment will not apply if we determine that an emergency exists which poses a significant risk to the well-being of the species or stocks of polar bear or Pacific walrus.

§ 18.128 What are the monitoring and reporting requirements?

(a) We require holders of Letters of Authorization to cooperate with us and other designated Federal, State, or local agencies to monitor the impacts of oil and gas exploration, development, and production activities on polar bear and Pacific walrus.

(b) Holders of Letters of Authorization must designate a qualified individual or individuals to observe, record, and report on the effects of their activities on polar bear and Pacific Walrus.

(c) We may choose to place an observer on site of the activity, on board drill ships, drill rigs, aircraft, icebreakers, or other support vessels or vehicles to monitor the impacts of your activity on polar bear and Pacific walrus.

(d) For exploratory activities, holders of a Letter of Authorization must submit a report to our Alaska Regional Director within 90 days after completion of activities. For development and production activities, holders of a Letter of Authorization must submit a report to our Alaska Regional Director by January 15 for the preceding year's activities. Reports must include, at a minimum, the following information.

(1) Dates and times of activity;

(2) Dates and locations of polar bear or Pacific walrus activity as related to the monitoring activity; and

(3) Results of the monitoring activities including an estimate of the level of take.

§ 18.129 What are the information collection requirements?

(a) The collection of information contained in this subpart has been approved by the Office of Management and Budget under the Paperwork Reduction Act (44 U.S.C. 3501 *et seq.*) and assigned clearance number 1018–0070. We need to collect the information in order to describe the proposed activity and estimate the impacts of potential takings by all persons conducting the activity. We will use the information to evaluate the application and determine whether to issue specific regulations, and, subsequently, Letters of Authorization.

(b) For the initial year, we estimate your burden to be 200 hours to develop an application requesting us to promulgate incidental take regulations. For the initial year and annually thereafter when you conduct operations under this rule, we estimate an 8 hour burden per Letter of Authorization, a 4 hour burden for monitoring, and an 8 hour burden per monitoring report. You must respond to this information collection request to obtain a benefit pursuant to Section 101(a)(5) of the Marine Mammal Protection Act. You should direct comments regarding the burden estimate or any other aspect of this requirement to the Information Collection Clearance Officer, U.S. Fish and Wildlife Service, Department of the Interior, Mail Stop 224 ARLSQ, 1849 C Street, NW., Washington, DC 20240, and the Office of Management and Budget, Paperwork Reduction Project (1018–0070), Washington, DC 20503.

Dated: January 22, 1999.

Nancy K. Hayes,

Acting Assistant Secretary for Fish and Wildlife and Parks.

[FR Doc. 99–2010 Filed 1–25–99; 2:48 pm]

BILLING CODE 4310–55–M

Proposed Rules

Federal Register
Vol. 64, No. 18
Thursday, January 28, 1999

This section of the FEDERAL REGISTER contains notices to the public of the proposed issuance of rules and regulations. The purpose of these notices is to give interested persons an opportunity to participate in the rule making prior to the adoption of the final rules.

OFFICE OF PERSONNEL MANAGEMENT

5 CFR Part 731

RIN 3206–AC19

Suitability

AGENCY: Office of Personnel Management.

ACTION: Proposed rule with request for comments.

SUMMARY: The Office of Personnel Management (OPM) is proposing changes to the rule on personnel suitability which OPM previously issued as a proposed rule for comments. OPM has received and considered public comments and is now publishing for comment proposed changes. The proposed rule addresses many of the concerns expressed, incorporates many of the suggestions received, and makes additional changes because of policy revisions and the abolishment of the Federal Personnel Manual (FPM). OPM will issue final regulations after review of the comments received on this proposed rule.

DATES: Comments must be submitted on or before March 1, 1999.

ADDRESSES: Send written comments to: Richard A. Ferris, Associate Director, Investigations Service, room 5416, U.S. Office of Personnel Management, 1900 E Street, NW, Washington, DC 20415–4000, fax: 202–606–2390, e-mail: raferris@opm.gov.

FOR FURTHER INFORMATION CONTACT: Thomas DelPozzo, (724) 794–5612.

SUPPLEMENTARY INFORMATION: OPM promulgated the proposed final suitability regulations with a request for comments in the **Federal Register** (61 FR 394, Jan. 5, 1996). Comments were received from 19 sources, including Federal agencies, individuals, and public interest organizations. Because of changes made in certain parts of these rules, we are seeking additional comments. Those who responded to the January 5, 1996, publication need not submit their comments again. Those responses will continue to be considered. Additionally, when part 731 was previously published, proposed changes to parts 732 and 736 were published at the same time. Those parts are still under consideration and individuals who commented on those parts need not respond to this publication. Those comments are still being considered. The following summarizes the principal comments and suggestions received and proposed actions to be taken, as well as information added because of the abolishment of the FPM or changes made because of policy revisions.

Part 731

Organization

Some subparts and sections were moved, added or removed for clarification purposes (only one section—§ 731.203—Due Process—was removed, but the information was moved to § 731.103), as follows:

Subpart A—Scope

Sec.
731.101 Purpose.
731.102 Implementation.
731.103 Delegation to agencies.
731.104 Appointments subject to investigation.
731.105 Jurisdiction.
731.106 Designation of public trust positions and investigative requirements.

Subpart B—Suitability Determinations

731.201 Standard.
731.202 Criteria.
731.203 Actions by OPM and other agencies.
731.204 Debarment by OPM.
731.205 Debarment by agencies.

Subpart C—Suitability Action Procedures

731.301 Scope.
731.302 Notice of proposed action.
731.303 Answer.
731.304 Decision.

Subpart D—Appeal to the Merit Systems Protection Board

731.401 Appeal to the Merit Systems Protection Board.

Subpart E—Savings Provision

731.601 Savings provision.

Section 731.101 Purpose

Agencies asked a number of questions about when to apply the regulations (*i.e.*, Excepted Service employees with or without intentional falsification, non-probationary employees, reinvestigated employees, employees with investigations initiated or completed after the first year). No changes were made in this section (§ 731.101 currently explains part 731 is used to make suitability determinations for employment in positions in the competitive service or for career appointment in the Senior Executive Service). However, clarifications were added at various other points (e.g., §§ 731.104 and 731.105 address investigation time frames, and § 731.106 addresses reinvestigations).

Language in the former Basic Federal Personnel Manual also stated that ''Heads of agencies, at their discretion, may apply all or part of these requirements (in part 731) for employment or continued employment in positions outside the competitive service.'' This clarification will be included in supplemental guidance.

In response to agencies' requests, some definitions were added. Other definitions will be included in supplemental guidance.

Section 731.102 Implementation

With the increased delegation of responsibilities to agencies, clarification was added to point out the consequences of not carrying out responsibilities according to OPM regulations (*i.e.*, revocation of delegation).

Section 731.103 Delegation to Agencies

One commenter felt the regulations should incorporate the guidance an agency will need to implement 5 CFR part 731, rather than issuing separate guidance. Because the CFR is a general body of regulatory laws governing practices and procedures, the detailed guidance/instructions will be issued separately. This guidance will allow agencies flexibility in carrying out the regulations and opportunity to develop their own internal procedures. OPM intends to issue this supplemental guidance as soon as possible after the regulations are finalized.

Comment was received from agencies regarding the hardship that delegation of applicant and appointee suitability adjudication authority would create from a staffing/training standpoint. Several wondered if they could redelegate or contract out their suitability adjudication responsibility. Although training may be needed, we believe the staffing implications for

agencies will be negligible. OPM will continue to adjudicate material falsification cases, and debarment cases when referred to OPM by an agency, which should encompass most of the adverse adjudication workload. The major benefit of delegating applicant suitability authority to agencies is that they no longer will have to refer all competitive examining applications with admitted suitability issues to OPM for suitability review.

One agency indicated contracting out adjudication decisions is currently prohibited. With OPM's Investigations Service privatization effort, OPM has contracted much of its adjudicative case processing, with close OPM oversight. However, OPM has retained all decision making responsibility, which it views as an inherently governmental function. Any agency contracting of OPM delegated suitability adjudication would be subject to OPM approval to ensure the agency retains the responsibility for all adjudicative decisions and develops a sufficient oversight program.

Agencies' delegated suitability authority under part 731 procedures is limited to applicant and appointee cases. Only OPM will adjudicate employee cases under part 731 procedures, since OPM is retaining authority for adjudicating material falsification cases, and material falsification is the most commonly used suitability factor in employee cases. An agency will have to use another authority such as part 752, if appropriate, to take action against an employee for reasons that could also form the basis for a part 731 suitability action. Agencies may also take action under other authorities, if appropriate, in appointee cases. Allowing agencies to use existing authorities, as appropriate, will provide them with more flexibility—i.e., part 315 is a more expedited procedure, and part 752 allows actions other than removal (although no debarment actions may be included using these authorities).

A few commenters opposed OPM's decision to retain jurisdiction over falsification cases; they felt it was cumbersome and not necessary. It was argued agencies are in a better position to adjudicate falsification cases involving their employees than OPM, since OPM is removed from and not familiar with the employee. However, it is precisely for this reason that OPM has decided to retain this authority. OPM will continue to adjudicate falsification cases across agency lines, and then take the appropriate action (removal and extended debarment from all competitive service positions) when an appointment is obtained fraudulently. This also is consistent with OPM's role in protecting the Merit System and reflects the position that performance in a position obtained through fraud is irrelevant.

In agreement with agency comments that, because of law or regulation they could not be delegated, OPM also retained jurisdiction in ''refusal to furnish testimony'' cases, and those cases involving 30 percent or more Compensable Disability Preference veterans.

In § 731.103(b) agencies are given the option of referring a case with suitability issues to OPM when a general, across agency lines debarment appears warranted, or adjudicating the case themselves. OPM will require that agencies conduct a sufficient level of investigation to resolve potentially serious suitability issues and determine if OPM debarment is warranted. The agency will need to coordinate with OPM before referring any cases. OPM will issue additional guidance to agencies to show what issues would warrant referral, *i.e.*, support a general debarment or a nexus debarment from general classifications of jobs across agency lines (e.g., all law enforcement positions). OPM adjudication will be at OPM's discretion.

To respond to concerns about when a suitability determination is needed, § 731.103(d) was added. The guidance is consistent with OPM Investigations Service's Federal Investigations Notice 95–1, issued January 19, 1995, and available from OPM's Investigations Service, which instructed agencies to determine qualifications and whether the person was in reach of selection before considering suitability matters.

The section previously entitled ''Due Process'' (§ 731.203) was included in this section as paragraph (e) for clarification of delegated responsibilities.

Some commenters wanted the regulations to authorize consideration of confidential information when making a suitability determination. Clarification was added to § 731.103(e)(3) explaining the proper use of confidential information in a suitability decision, i.e., the confidential information can be used as lead information and in interrogatories if the identity of the source is not compromised in any way. Fairness requires that only non-confidential information be used as a basis for an adverse action. Additionally, confidential information cannot normally be disclosed in administrative or judicial forums.

Commenters wanted to limit the appeal rights given to probationary employees under part 731. If the agency takes an action under part 731, it must follow the procedures and provide the appeal rights stated in this part. Part 315, covering probationers, contains more limited appeal rights and may also be used.

Sections 731.104 Appointments Subject to Investigation, and 731.105 Jurisdiction

Commenters suggested clarifying jurisdiction. The language in the previous regulation dealing with jurisdiction discussed appointments ''subject to investigation,'' which was confusing, and created problems for agencies. Commenters felt the 1 year subject to investigation requirement was the time frame for initiating and completing investigations. The 1 year period is used to determine jurisdiction (OPM or the employing agency) and is not an investigative restriction. We made revisions to part 731 to clarify this topic, adding definitions under § 731.101(b) and using separate sections to differentiate between ''subject to investigation'' (§ 731.104) and ''jurisdiction'' (§ 731.105).

Section 731.106 Designation of Public Trust Positions and Investigative Requirements

Commenters, fearing inconsistencies between agencies, recommended retaining definitions for risk level designations. OPM has done so, and will also issue a model agencies may use to determine risk in supplemental guidance.

A commenter recommended adding to the definition of ''high risk public trust'' any position that regularly involves access to information concerning law enforcement, including criminal investigations. ''Access to sensitive but unclassified information'' and ''law enforcement duties'' are already included in the definition; agencies may also use the ''other duties demanding a high degree of public trust'' category to meet their individual needs.

Some agencies felt they should be given authority to determine the level of investigation needed for a particular position. OPM will provide supplemental guidance which will include minimum standards for government-wide consistency but allow some flexibility regarding investigative requirements. Agencies will need to consider both the level of public trust and position sensitivity to ensure the appropriate level of investigation is conducted as required by parts 731 and 732.

OPM's reinvestigation requirement for public trust positions was eliminated from the published proposed

regulations. Commenters opposed this removal, believing reinvestigations to be a necessary and valuable tool for their use in ensuring the public trust. While OPM finds no explicit statutory authority on which to base an OPM requirement that agencies conduct public trust reinvestigations, agencies may rely on other appropriate authority to require that certain positions be subject to periodic reinvestigations. We reference some other authorities in this section. Agencies may also promulgate their own regulations to require reinvestigations for certain public trust positions if they have no other existing authority.

Commenters requested clarification regarding reinvestigation requirements when a person moves from a lower to higher risk position. This was done in § 731.106(e).

Section 731.201 Standard

Proposed regulation had added ''other appropriate actions'' as being possible, in addition to removals, in suitability cases. One agency wanted ''other appropriate actions'' identified. OPM decided to remove this wording. OPM will be making debarment and removal decisions only, and if agencies want to take other actions, such as a suspension, there are other authorities they can use when appropriate (i.e., part 752).

The phrase ''protect the integrity * * * of the service'' was added. This clarifies that an important facet of the suitability standard is the integrity of the Merit System and fair and open competition for positions.

A commenter felt § 731.201 requires an adverse suitability determination on every unsuccessful candidate and asked if ''federal employment'' was used in the narrow or broadest sense. We added clarifying and limiting language to subpart A, particularly at § 731.103(d), to address this concern. The ''Delegation Examining Operations Handbook'' lists a number of reasons an eligible may be eliminated from consideration. Suitability is only one of these reasons. The Handbook also recommends suitability review be done in the hiring phase. OPM will be issuing further clarification regarding the suitability adjudication process in supplemental guidance.

Section 731.202 Criteria

Language was deleted from the general criteria of § 731.202(a) and from the suitability factors in § 731.202(b)(1) and (2). Nexus language is contained in § 731.201.

Language was returned to § 731.202(c) to give an adjudicative agency discretion as to when to apply the additional considerations.

A commenter felt the additional consideration ''circumstances surrounding the conduct'' covers the consideration of ''societal conditions'' which could then be removed. This was not changed because the factors address two separate areas of consideration that could impact the final decision. Our supplemental guidance will elaborate on all the additional considerations.

Section 731.203 Actions by OPM and Other Agencies

§ 731.203(a) was revised to eliminate confusion over ''subject to investigation'' language and to be consistent with other similar revisions.

OPM's authority to cancel reinstatement eligibility was added in § 731.203(b) to ensure OPM's authority to do so is clear and contained in regulation and to further distinguish available OPM actions from agency actions.

Wording was added to § 731.203(c) so agencies will understand they may use other authorities in lieu of an action under part 731.

We will clarify, in supplemental guidance, the procedures an agency should follow when releasing a copy of the ''materials relied upon'' referred to in § 731.203(e) when the action is based on an OPM investigation.

Section 731.204 Debarment by OPM

OPM has revised the regulations and delegated authority to agencies for limited debarments. This section distinguishes OPM's debarment authority and procedures from those delegated to agencies, which are addressed in § 731.205.

Section 731.204(b) was revised to reflect OPM's authority to take a subsequent debarment action after expiration of a prior period of debarment, but eliminates the requirement that OPM redetermine every debarred individual's suitability. This change also takes into consideration that, with delegated applicant suitability authority, agencies can adjudicate applicant cases when they have been previously debarred by OPM and the debarment has expired. The agency may favorably adjudicate at that point, refer for OPM review, or take their own debarment action. Unless new issues are present, a new general debarment action by OPM would normally not be warranted. The agency will be alerted to prior OPM debarments if reported by the subject on the OF 306 and/or SF 85P/86, or during the agency's Suitability/Security Investigations Index (SII) check, and may use its delegated suitability authority to determine if the person is suitable for the specific position sought.

Section 731.205 Debarment by Agencies

Since agencies would be making agency nexus adverse suitability decisions, OPM also delegates to them authority to take a limited debarment action, for a period not to exceed one year, and only for positions within that agency. This will prevent a person found unsuitable by an agency from immediately refiling an application for the same or other positions in the agency and ensure the agency does not have to make multiple suitability determinations in connection with the same individual.

Since agency debarment authority is limited to applicants or appointees under part 731, the lack of agency authority to debar employees should prompt agencies to request investigations and adjudicate on a more timely basis when a person is first appointed. Also, if an employee is removed by an agency under part 752 and reapplies for a position in the agency, OPM or the agency may adjudicate suitability under part 731 as a separate action.

The agency will be responsible for taking appropriate action if it determines a person has applied or been appointed while under agency debarment. ''Appropriate actions'' could include rating additional applications ineligible, removing an appointee, or referring the matter to OPM for general debarment.

Section 731.302 Notice of Proposed Action

A commenter said the notice fails to advise the individual of his constitutional right to representation. The regulation does not prevent an individual from retaining counsel to assist in preparing a response to a proposed action if so desired, and specifically mentions representation in § 731.303. Also, if a person appeals a suitability determination to MSPB, 5 CFR 1201.31 states the appellant may be represented in any matter related to the appeal.

Commenters questioned the efficiency of the requirement that the notice of proposed action be mailed to both the duty station and last known address. We have changed the wording to allow OPM or the agency to decide the most effective and efficient method of delivery, to include mailings to both locations, if necessary, to ensure a timely delivery.

Section 731.302(c) was added to show a requirement specific to OPM.

Section 731.303 Answer

Because only OPM will be adjudicating employee cases under part 731 procedures (where an opportunity for an oral response is provided), we removed reference to the agency.

Section 731.304 Decision

Commenters questioned the need to retain an appointee or employee 30 days after OPM directs removal. We have eliminated this requirement. We now require that the agency effect OPM's directed removal action within 5 work days of receipt of our decision to allow agencies time to process the removal action.

Section 731.401 Appeal to the Merit Systems Protection Board

A provision was added regarding MSPB modification of debarments. In cases where the MSPB does not sustain all the reasons for an OPM or agency debarment action and, as a result, determines the length of debarment may be inappropriate, the case would be returned to OPM or the agency to determine the debarment length warranted for the issues sustained.

A commenter felt the agency option to either retain in a pay status pending appeal of an OPM directed removal, or remove, would be based on the level of agency support an appointee or employee enjoys, thereby creating two disparate classes. This concern is eliminated by our revision to § 731.304.

Reference to an OPM directed suspension was inappropriate here, and deleted, as discussed previously.

E.O. 12866, Regulatory Review

This rule has been reviewed by the Office of Management and Budget in accordance with E.O. 12866.

Regulatory Flexibility Act

I certify that this rule will not have significant economic impact on a substantial number of small entities because it affects only Federal applicants, employees and agencies.

List of Subjects in 5 CFR Part 731

Administrative practice and procedure, Government employees.

Office of Personnel Management.

Janice R. Lachance,

Director.

Accordingly, the Office of Personnel Management proposes to amend 5 CFR part 731 as follows:

Part 731 is revised to read as follows:

PART 731—SUITABILITY

Subpart A—Scope

Sec.
731.101 Purpose.
731.102 Implementation.
731.103 Delegation to agencies.
731.104 Appointments subject to investigation.
731.105 Jurisdiction.
731.106 Designation of public trust positions and investigative requirements.

Subpart B—Suitability Determinations
731.201 Standard.

731.202 Criteria.
731.203 Actions by OPM and other agencies.
731.204 Debarment by OPM.
731.205 Debarment by agencies.

Subpart C—Suitability Action Procedures
731.301 Scope.

731.302 Notice of proposed action.
731.303 Answer.
731.304 Decision.

Subpart D—Appeal to the Merit Systems Protection Board

731.401 Appeal to the Merit Systems Protection Board.

Subpart E—Savings Provision

731.501 Savings provision.

Authority: 5 U.S.C. 1302, 3301, 7301,7701; E.O. 10577, 3 CFR 1954–1958 Comp., p. 218; E.O. 12731, 3 CFR, 1990 Comp., p. 306., 5 CFR, part 5.

Subpart A—Scope

§ 731.101 Purpose.

(a) The purpose of this part is to establish criteria and procedures for making determinations of suitability for employment in positions in the competitive service and for career appointment in the Senior Executive Service (hereinafter in this part, ''competitive service'') pursuant to 5 U.S.C. 3301 and E.O. 10577 (3 CFR, 1954–1958 Comp., p. 218). Section 3301 of title 5, United States Code, directs consideration of ''age, health, character, knowledge, and ability for the employment sought.'' E.O. 10577 directs OPM to examine ''suitability'' for competitive Federal employment. This part concerns only determinations of ''suitability'' based on an individual's character or conduct that may impact the integrity or efficiency of the service. Determinations made under this part are distinct from determinations of eligibility for assignment to, or retention in, sensitive national security positions made under E.O. 10450 (3 CFR, 1949–1953 Comp., p. 936), E.O. 12968 or similar authorities.

(b) Definitions. In this part:

Applicant. A person being considered for employment.

Appointee. A person who has entered on duty and is in the first year of a subject to investigation appointment (as defined in § 731.104).

Employee. A person who has completed the first year of a subject to investigation appointment.

Material, intentional false statement is one that is capable of influencing, or has a natural tendency to affect, an official decision. The test for materiality thus does not rest on whether an agency actually relied on the false statement.

§ 731.102 Implementation.

(a) An investigation conducted for the purpose of determining suitability under this part may not be used for any other purpose except as provided in a Privacy Act system of records notice published by the agency conducting the investigation.

(b) Under OMB Circular No. A–130 Revised, issued February 8, 1996, the Director of OPM is to establish personnel security policies for Federal personnel associated with the design, operation, or use of Federal automated information systems. Agencies are to implement and maintain a program to ensure that adequate security is provided for all automated information systems. Agency programs should be consistent with government-wide policies and procedures issued by OPM. The Computer Security Act of 1987 (Pub. L. 100–235) provides additional requirements for Federal automated information systems.

(c) Policies, procedures, criteria, and guidance for the implementation of this part shall be set forth in issuances of the OPM. Agencies exercising authority under this part by delegation from OPM shall conform to such policies, procedures, criteria, and guidance. Failure to do so may result in revocation by OPM of an agency's delegation to adjudicate suitability under this part.

§ 731.103 Delegation to agencies.

(a) OPM delegates to the heads of agencies limited authority for adjudicating suitability in cases involving applicants for and appointees to competitive service positions in the agency (including limited, agency-specific debarment authority under § 731.205). OPM retains jurisdiction in all competitive service cases involving evidence of material, intentional false statement or deception or fraud in examination or appointment. Agencies must refer these cases to OPM for adjudication, or contact OPM for prior approval if the agency wants to take action under its own authority (5 CFR part 315 or 5 CFR part 752). Also, this delegation does not include cases

involving refusal to furnish testimony as required by § 5.4 of this chapter, or passover requests involving preference eligibles who are 30 percent or more compensably disabled which must be referred to OPM for adjudication, as provided under Pub. L. 95–454.

(b) Any adjudication by an agency acting under delegated authority from OPM which indicates that a general, across agency lines debarment by OPM under § 731.204(a) may be an appropriate action should be referred to OPM for debarment consideration if not favorably adjudicated by the agency. Referral should be made prior to any proposed action, but after sufficient resolution of the suitability issue(s) through subject contact or investigation to determine if a general debarment period appears warranted.

(c) Agencies exercising authority under this part by delegation from OPM must show by policies and records that reasonable methods are used to ensure adherence to regulations, standards, and quality control procedures established by OPM.

(d) Before making any applicant suitability determination, the agency should first ensure the applicant is eligible for the position, among the best qualified, and/or within reach of selection. Because suitability issues may not be disclosed until late in the application/appointment process, only the best qualified should require a suitability determination, with appropriate procedures followed and appeal rights provided, if suitability issues would form the only basis for elimination from further consideration.

(e) When an agency, exercising authority under this part by delegation from OPM, makes an adjudicative decision under this part, or changes a tentative favorable placement decision to an unfavorable decision, based on an OPM report of investigation or upon an investigation conducted pursuant to OPM-delegated authority, the agency should:

(1) Insure that the records used in making the decision are accurate, relevant, timely, and complete to the extent reasonably necessary to ensure fairness to the individual in any determination;

(2) Insure that all applicable administrative procedural requirements provided by law, the regulations in this part, and OPM policy guidance have been observed;

(3) Consider all available information in reaching its final decision, except information furnished by a non-corroborated confidential source. Information furnished by a non-corroborated confidential source can only be used for limited purposes, such as lead information or in interrogatories to a subject if the identity of the source is not compromised in any way. An adverse suitability decision may not be based on such information; and

(4) Keep any record of the agency action as required by OPM in its supplemental guidance.

(f) Paragraph (a) of this section notwithstanding, OPM may exercise its jurisdiction under this part in any case when it, in its discretion, deems necessary.

(g) Any applicant or appointee who is found unsuitable by any agency acting under delegated authority from OPM under this part may appeal the adverse suitability decision to the Merit Systems Protection Board under the Board's regulations.

§ 731.104 Appointments subject to investigation.

(a) In order to establish an appointee's suitability for employment in the competitive service, every appointment to a position in the competitive service is subject to investigation by OPM, or an agency conducting investigation under delegated authority from OPM, except:

(1) Promotions;

(2) Demotions;

(3) Reassignment;

(4) Conversion from career-conditional to career tenure;

(5) Appointment, or conversion to an appointment, involving an employee of an agency who has been serving continuously with that agency for at least 1 year in one or more positions under an appointment subject to investigation; and

(6) Transfer, provided the individual has served continuously for at least 1 year in a position subject to investigation.

(b) Appointments are subject to investigation to continue OPM's (or a delegated agency's) jurisdiction to investigate the suitability of an applicant after appointment, and to authorize OPM or an agency acting under delegated authority to require removal when it finds the appointee unsuitable for Federal employment. The subject to investigation condition may not be construed as requiring an employee to serve a new probationary or trial period or as extending the probationary or trial period of an employee.

§ 731.105 Jurisdiction.

(a) OPM may take a suitability action under this part against an applicant or appointee based on any of the criteria of § 731.202;

(b) An agency, exercising delegated authority, may take a suitability action under this part against an applicant or appointee based on the criteria of § 731.202 subject to the agency limitations prescribed in § 731.103;

(c) OPM may take a suitability action under this part against an employee only in cases involving material, intentional false statement or deception or fraud in examination or appointment, or refusal to furnish testimony as required by § 5.4 of this chapter, or statutory or regulatory bar.

(d) An agency may not take a suitability action against an employee under this part; rather, it may take a suitability action against an employee to promote the efficiency of the service under the authority and following the procedures of part 752 of this chapter.

§ 731.106 Designation of public trust positions and investigative requirements.

(a) *Risk designation.* Agency heads shall designate every competitive service position within the agency at a high, moderate, or low risk level as determined by the position's potential for adverse impact to the efficiency and integrity of the service. OPM will provide an example of a risk designation system for agency use in supplemental guidance.

(b) *Public trust positions.* Positions at the high or moderate risk levels would normally be designated as ''Public Trust'' positions. Such positions would involve policy making, major program responsibility, public safety and health, law enforcement duties, fiduciary responsibilities, or other duties demanding a significant degree of public trust; and positions involving access to or operation or control of sensitive but unclassified information or financial records, with a significant risk for causing damage or realizing personal gain.

(c) *Investigative requirements.* Persons receiving an appointment made subject to investigation under this part shall undergo a background investigation. Minimum investigative requirements correlating to risk levels will be established in supplemental guidance provided by OPM. Investigations must be initiated before appointment or, at most, within 14 calendar days of placement in the position.

(d) *Suitability reinvestigations.* Agencies, relying on authorities such as the Computer Security Act of 1987 and OMB Circular No. A–130 Revised (issued February 8, 1996), may require incumbents of certain public trust positions to undergo periodic reinvestigations. The appropriate level of any reinvestigation will be determined by the agency, but may be

based on supplemental guidance provided by OPM.

(e) *Risk level changes.* If the risk level of the position itself is changed (e.g., the individual moves from a low risk to a moderate or high risk position) the incumbent may remain in the position, but any upgrade reinvestigation required by the agency for the new risk level should be initiated within 14 calendar days after the new designation is final.

Subpart B—Suitability Determinations

§ 731.201 Standard.

Subject to subpart A of this part, an applicant, appointee, or employee may be denied Federal employment or removed from a position only when the action will protect the integrity or promote the efficiency of the service.

§ 731.202 Criteria.

(a) *General.* In determining whether its action will protect the integrity or promote the efficiency of the service, OPM, or an agency to which OPM has delegated authority, shall make its determination on the basis of the specific factors which follow, with appropriate consideration given to the additional considerations outlined in paragraph (c) of this section.

(b) *Specific factors.* When making a determination under paragraph (a) of this section, the following reasons may be considered a basis for finding an individual unsuitable:

(1) Misconduct or negligence in employment;

(2) Criminal or dishonest conduct;

(3) Material, intentional false statement or deception or fraud in examination or appointment;

(4) Refusal to furnish testimony as required by § 5.4 of this chapter;

(5) Alcohol abuse of a nature and duration which suggests that the applicant or appointee would be prevented from performing the duties of the position in question, or would constitute a direct threat to the property or safety of others;

(6) Illegal use of narcotics, drugs, or other controlled substances, without evidence of substantial rehabilitation;

(7) Knowing and willful engagement in acts or activities designed to overthrow the U.S. Government by force;

(8) Any statutory or regulatory bar which prevents the lawful employment of the person involved in the position in question.

(c) *Additional considerations.* In making a determination under paragraphs (a) and (b) of this section, OPM and agencies shall consider the following additional considerations to the extent they deem them pertinent to the individual case:

(1) The nature of the position for which the person is applying or in which the person is employed;

(2) The nature and seriousness of the conduct;

(3) The circumstances surrounding the conduct;

(4) The recency of the conduct;

(5) The age of the person involved at the time of the conduct;

(6) Contributing societal conditions; and

(7) The absence or presence of rehabilitation or efforts toward rehabilitation.

§ 731.203 Actions by OPM and other agencies.

(a) An applicant may be denied employment or an appointee may be removed when OPM or an agency exercising delegated authority under this part finds that the applicant or appointee is unsuitable for the reasons cited in § 731.202 subject to the agency limitations of § 731.103(a).

(b) OPM may require that an employee be removed on the basis of a material, intentional false statement, or deception or fraud in examination or appointment; or refusal to furnish testimony; or a statutory or regulatory bar. OPM may also cancel any reinstatement eligibility obtained as a result of false statement, deception or fraud in the examination or appointment process.

(c) An action to remove an appointee or employee for suitability reasons under this part is not an action under parts 752 or 315 of this chapter, but agencies may use their authority under and follow the procedures of parts 752 or 315, as appropriate, in lieu of taking the action under this part 731.

(d) When OPM instructs an agency to remove an appointee or employee under this part, it shall notify the agency and the appointee or employee of its decision in writing.

(e) Before OPM, or any agency having delegated authority from OPM under this part, shall take a final suitability action against an applicant, appointee, or employee under this part, the person against whom the action is proposed shall be given notice of the proposed action (including the availability for review, upon request, of the materials relied upon), an opportunity to respond, notice of the final decision on the action, and notice of rights of appeals.

(f) Agencies are required to report to OPM all unfavorable adjudicative actions taken under this part, and all actions based on an OPM investigation.

§ 731.204 Debarment by OPM.

(a) When OPM finds a person unsuitable for any reason listed in § 731.202, OPM, in its discretion, may deny that person examination for, and appointment to, a competitive service position for a period of not more than 3 years from the date of determination of unsuitability.

(b) On expiration of a period of debarment, OPM or an agency may redetermine a person's suitability for appointment in accordance with the procedures of this part.

(c) OPM, in its sole discretion, determines the duration of any period of debarment imposed under this section.

§ 731.205 Debarment by agencies.

(a) Subject to the provisions of § 731.103, when an agency finds an applicant or appointee unsuitable for reasons listed in § 731.202, the agency may deny that person examination for, and appointment to, all, or specific, competitive service positions within the agency for a period of not more than 1 year from the date of determination of unsuitability.

(b) On expiration of a period of agency debarment, the agency may redetermine a person's suitability for appointment by the agency, in accordance with the procedures of this part.

(c) The agency is responsible for enforcing the period of debarment and taking appropriate action should the individual apply or be inappropriately appointed during the debarment period. This does not limit OPM's ability to exercise jurisdiction and take an action if it deems appropriate.

(d) The agency, in its sole discretion, determines the duration of any period of debarment imposed under this section.

Subpart C—Suitability Action Procedures

§ 731.301 Scope.

(a) *Coverage.* This subpart sets forth the procedures to be followed when OPM or an agency having delegated authority from OPM, acting under authority of this part, proposes to take or to instruct an agency to take, a final suitability ineligibility action, including removal, against an applicant, appointee or employee in the competitive service.

(b) *Definition.* In this subpart, *days* means calendar days.

§ 731.302 Notice of proposed action.

(a) OPM or the agency having delegated authority from OPM under this part shall notify the applicant, appointee, or employee (hereinafter, the ''respondent'') in writing of the

proposed action and of the charges against the respondent. The notice shall state the reasons, specifically and in detail, for the proposed action. The notice shall also state that the respondent has the right to answer this notice in writing. If the respondent is an employee, the notice shall further state that the employee may also make an oral answer, as specified in § 731.303(a). The notice shall further inform the respondent of the time limits for response as well as the address to which such response should be made.

(b) The notice of proposed action shall be served upon the respondent by being mailed or hand delivered to the respondent's last known residence, and/or duty station, no less than 30 days prior to the effective date of the proposed action. If the respondent is employed in the competitive service on the date the notice is served, the respondent shall be entitled to be retained in a pay status during the notice period.

(c) In an OPM action, OPM shall send a copy of this notice to any employing agency that is involved.

§ 731.303 Answer.

(a) *Respondent's answer.* A respondent may answer the charges in writing and furnish documentation and/or affidavits in support of the response. A respondent who is an employee may also answer orally. The respondent may be represented by a representative of the respondent's choice, and such representative shall be designated in writing. To be timely, a written answer shall be made no more than 30 days after the date of the notice of proposed action. In the event an employee requests to make an oral answer, the request must be made within this 30 day time frame, and OPM shall determine the time and place thereof, and shall consider any answer the respondent makes in reaching a decision.

(b) *Agency's answer.* In actions proposed by OPM, the agency may also answer the notice of proposed action. The time limit for filing an answer is 30 days from the date of the notice. OPM shall consider any answer the agency makes in reaching a decision.

§ 731.304 Decision.

The decision shall be in writing, dated, and inform the respondent of the reasons for the decision. In an OPM directed removal, the employing agency shall remove the appointee or employee from the rolls within 5 work days of receipt of OPM's final decision; removals taken by an agency under this part should be effected within 5 work days of their final decision to remove. The respondent shall also be informed that an adverse decision can be appealed in accordance with subpart D of this part. In OPM actions, OPM shall also notify the respondent's employing agency of its decision.

Subpart D—Appeal to the Merit Systems Protection Board

§ 731.401 Appeal to the Merit Systems Protection Board.

(a) *Appeal to the Merit Systems Protection Board.* An individual who has been found unsuitable for employment may appeal the decision to the Merit Systems Protection Board (the Board). However, the Board may not modify a debarment period. If the Board finds that fewer than all of the charges are supported by a preponderance of the evidence, and affirms the determination of unsuitability, it shall remand the case to OPM or the agency to determine whether the debarment period is still appropriate based on the sustained charges. This subsequent determination by OPM or the agency shall be final without any further appeal to the Board.

(b) *Appeal procedures.* The procedures for filing an appeal with the Board are found at part 1201 of Chapter II of this chapter.

Subpart E—Savings Provision

§ 731.501 Savings provision.

No provision of the regulations in this part shall be applied in such a way as to affect any administrative proceeding pending on (THE EFFECTIVE DATE OF THE FINAL RULE). An administrative proceeding is deemed to be pending from the date of the ''notice of proposed action'' described in § 731.302.

[FR Doc. 99–1958 Filed 1–27–99; 8:45 am]

BILLING CODE 6325–01–P

DEPARTMENT OF AGRICULTURE

Agricultural Marketing Service

7 CFR Part 47

[Docket Number FV98–358]

Amendments to Rules of Practice Under the Perishable Agricultural Commodities Act (PACA)

AGENCY: Agricultural Marketing Service, USDA.

ACTION: Proposed rule.

SUMMARY: The Department of Agriculture (USDA) is proposing to amend the Rules of Practice under the Perishable Agricultural Commodities Act (other than formal disciplinary proceedings). In addition to bringing several sections of the Rules of Practice into compliance with the PACA Amendments of 1995, USDA is proposing numerous additional changes in an effort to enhance customer service.

DATES: Comments must be received by March 1, 1999.

ADDRESSES: Interested persons are invited to submit written comments concerning this proposal. Comments must be sent to Charles W. Parrott, Assistant Chief, PACA Branch, Fruit and Vegetable Division, AMS, USDA, Room 2095-So. Bldg., P.O. Box 96456, Washington, DC 20090–6456. Email—charles__w__parrott@usda.gov. All comments should reference the docket number and the date and page number of this issue in the **Federal Register** and will be made available for public inspection in the PACA Branch during regular business hours and posted on the internet at www.ams.usda.gov/fv/paca.htm.

FOR FURTHER INFORMATION CONTACT: Charles W. Parrott, Assistant Chief, PACA Branch, Room 2095-So. Bldg., Fruit and Vegetable Division, AMS, USDA, Washington, D.C. 20250, Phone (202) 720–4180.

SUPPLEMENTARY INFORMATION:

Background

The Perishable Agricultural Commodities Act (PACA or Act) establishes a code of fair trading practices for the marketing of fresh and frozen fruits and vegetables in interstate and foreign commerce. The Act requires that parties fulfill their contractual obligations, and provides a forum where firms that buy and sell fruits and vegetables can settle commercial disputes outside of the civil court system. Under the PACA, these disputes, or reparation complaints, are handled first on an informal basis in an attempt to achieve an amicable settlement between the disputing parties. About 75 percent of all reparation complaints are resolved informally, generally within eight weeks. However, if an informal settlement is not reached, there is a formal complaint procedure available under which USDA's Judicial Officer issues a binding decision in the case. The Rules of Practice applicable to reparation proceedings inform the industry of USDA's procedures and requirements for the handling of informal and formal complaints under the PACA.

Agricultural Marketing Service (AMS) believes that amending the Rules of Practice will enhance customer service by expediting the handling of

documents in PACA reparation proceedings. For example, the Rules of Practice applicable to reparation proceedings presently require that the initial attempt to serve formal reparation documents must be made by certified or registered mail. The amendments will expand the options for the service of certain documents to include private or commercial mail delivery.

The amendments would also clarify certain regulations and definitions. The Rules of Practice are being amended throughout Part 47 to replace the term ''shortened procedure'' with ''documentary procedure''. This more accurately reflects a formal reparation process that does not involve an oral hearing.

A number of definitions have been amended in the Rules of Practice. Due to the reorganization of AMS, a definition of the ''Fruit and Vegetable Programs'' would be substituted for the definition of ''Division,'' a definition of ''Associate Administrator'' would be substituted for the definition of ''Deputy Administrator,'' and a definition of ''Deputy Administrator'' would be substituted for the definition of ''Director.'' Additionally, the words ''Program'' and ''Deputy Administrator'' would be substituted for ''Division'' and ''Director'' respectively, wherever they appear in Part 47. The term ''examiner'', § 47.2(i)(1) has been expanded to indicate that senior marketing specialists may also prepare decisions in shortened or ''documentary procedure'' cases under the review of USDA's Office of the General Counsel (OGC). The definition of ''examiner's report'' in § 47.2(j) has been shortened to eliminate the references to Administrative Law Judges because they do not participate in reparation cases and do not write examiner's reports. As already indicated, the definitions of ''mail'' and ''re-mail'' have been expanded to allow for additional methods of service to include commercial or private mail delivery services. The section regarding informal complaints, § 47.3, would be revised to require that the complaint be in writing and would allow for the filing of an informal complaint by facsimile transmission. The required information to be contained in an informal complaint would be slightly revised for clarification purposes. The revision changes ''car initial and number, if carlot;'' to read ''carrier identification;'' and corrects a typographical error in § 47.3(a) (2) (vii) by inserting the word ''and'' between the words ''gross net.'' A statement regarding the required filing fee of $60.00 would be added to the text. Without the required accompanying fee, a reparation case file will not be opened and the statute of limitations would not be tolled. Additionally, paragraph (c) of that section regarding the ''Status of person filing informal complaint'' would be eliminated because it is not pertinent to these regulations.

In section 47.4, which addresses service matters, revisions would permit the commercial or the private delivery of certain documents and describe when service is perfected under the various mailing options. By expanding ways to ''mail'' and ''re-mail'', service options will be more flexible and accommodating. Additionally, the reference to the service of the Chief's determination that a person was responsibly connected with a licensee will be deleted from paragraph (b)(1) because this issue is addressed in § 47.49 of the regulations (7 CFR 47.49).

The section that delineates formal complaints in the Rules of Practice would be changed to include a requirement that a formal complaint be filed within nine months of notification that complainant may proceed formally or complainant will lose the opportunity to proceed with a formal complaint. Additionally, the rules would now require that a $300.00 handling fee must accompany the filing of a formal complaint in order for the complaint to be served upon the respondent. If respondent files a counterclaim as part of its answer, it must also include the $300.00 handling fee. The handling fee for formal complaints is required by the Act and including it in the rules is a change to conform with the 1995 Amendments.

Significant changes would be made to section 47.9, which addresses the reply to a counterclaim or set-off, in order to require the same information in the reply that is now required in the answer. The counterclaim or set-off would be treated as a formal complaint filed by the respondent, and therefore, failure to reply would be a default on complainant's part as to the counterclaim or the set-off. In the current rules, a failure to file a reply is treated as a denial of the allegations of the counterclaim or set-off; the proposed changes will create a parallel between the filing of a complaint and the filing of a counterclaim or set-off.

With the new expanded definition of examiner in section 47.2(i), section 47.11 is amended to clarify that only OGC attorneys, and not other USDA employees, would be granted certain powers under this section of the regulations because only OGC attorneys may conduct oral hearings. The examiner's powers would be amended to include the ability to require parties to provide copies of exhibits prior to hearings and depositions in any type of hearing. Currently, this power is limited to audio-visual and telephone hearings, but it is appropriate to expand the examiner's powers in this way in order to promote efficiency. In addition, only OGC attorneys may permit intervention of a party for good cause shown. While the definition of examiner has been expanded for documentary procedures, any non-attorney examiner's powers would be specified and reviewed in order to ensure that legally sound and consistent reparation decisions are prepared. The Rules of Practice would be changed throughout to reflect this assignment of responsibilities.

The proposed amendments update the Rules of Practice to comply with the 1995 PACA Amendments which raised the minimum claim for damages required for an oral hearing from $15,000 to $30,000. Another correction that would be made in sections 47.11 and 47.16 is the clarification that any subpoenas or orders for depositions would be made over the facsimile signature of the Secretary. In addition, the regulations regarding oral hearings would no longer permit complainant to submit evidence in the form of depositions in lieu of appearing in person or by counsel. Instead, all parties would be required to appear in person or through a representative.

The section which discusses the deposition process would be expanded to include references to the possibility of depositions in a case that is converted from an oral hearing case to a documentary procedure case. Currently, the section does not refer to this type of deposition; the regulations only refer to depositions linked to oral hearings.

In order to ensure sufficient opportunity for review by the examiner and sufficient notice to the individual who is subpoenaed, section 47.17 would be amended to require that applications for subpoena be received at least thirty days prior to the hearing or deposition date, and that the subpoena be issued at least twenty days before the date of appearance. An exception may be made for good cause shown.

All filings with regard to claims for fees and expenses in oral hearing cases and the resultant objections would be filed with the Hearing Clerk instead of the examiner in order to ensure that the documents are properly filed into the official record kept by the Hearing Clerk. The Hearing Clerk's Office would also be the appropriate place to file petitions for rehearing, reargument, reconsideration of orders, reopening of hearings and reopening after a default. Anywhere in the regulations that the

words ''hearing clerk'' appears would be replaced by the words ''Hearing Clerk''.

As already discussed, the term ''shortened procedure'' would be changed to ''documentary procedure''. In the documentary procedure section, the rule regarding verification of pleadings or statements would be expanded to note that certification by a notary public alone is not sufficient, rather, a signed verifying statement must be appended to the document.

Procedures for requesting a reopening after a default would be removed from the provision that covers filing, extensions of time, effective date of filing, computations of time, and official notice and moved to the more appropriate section that deals with rehearing, reargument, reconsideration of orders, and reopening of hearings. In addition, the provision for reopening after a default would be revised to permit a petition to reopen the proceedings to be filed before the expiration of 30 days from the date of issuance of the default order. This revision would eliminate any confusion that exists in the current regulation because it does not provide a time certain for filing. The amendment clarifies that the filing must be made before the Default Order becomes final. For all filings, the provision for computation of time would be corrected to include Saturdays as well as Sundays and holidays.

Executive Orders 12866 and 12988

This proposed rule, issued under the Perishable Agricultural Commodities Act (7 U.S.C. 499 *et. seq.*), as amended, has been determined to be not significant for the purposes of Executive Order 12866, and therefore, has not been reviewed by the Office of Management and Budget (OMB).

This proposed rule has been reviewed under Executive Order 12988, Civil Justice Reform and is not intended to have retroactive effect. This proposed rule will not preempt any State or local laws, regulations, or policies, unless they present an irreconcilable conflict with this rule. There are no administrative procedures which must be exhausted prior to any judicial challenge to the provisions of this rule.

Effects on Small Businesses

Pursuant to requirements set forth in the Regulatory Flexibility Act (RFA) (5 U.S.C. 601 *et. seq.*), USDA has considered the economic impact of this proposed rule on small entities. The purpose of the RFA is to fit regulatory actions to the scale of businesses subject to such actions in order that small businesses will not be unduly or disproportionately burdened. Small agricultural service firms have been defined by the Small Business Administration (13 CFR 121) as those whose with less than 500 employees. The PACA requires all businesses that operate subject to its provisions maintain a license issued by USDA. There are approximately 15,700 PACA licensees, a majority of which may be classified as small entities.

The proposed revisions to the PACA Rules of Practice would streamline USDA procedures and requirements for handling of informal and formal complaints under the PACA. In Fiscal Year 1998, there were 2198 informal reparation claims, 21 counterclaims, and 563 formal reparation cases filed with USDA under the PACA. The proposed revisions to the reparation Rules of Practice would apply only to firms that utilize USDA's service for resolving commercial disputes under the PACA. AMS believes that the revisions to the Rules of Practice will enhance customer service to the industry by expediting the handling of documents in PACA reparation proceedings. Most of the proposed revisions provide notice to claimants of the procedure that AMS will follow in adjudicating claims. For example, the proposed revision that provides for additional methods of service of formal documents by AMS will not produce any economic effect on licensees initially. But, if the use of commercial and/or express delivery services take the place of certified mail, licensees may be required to absorb the additional costs through marginally higher fees.

There are some proposed revisions, however, that would affect the rights and obligations of claimants. For example, claimants must be certain to adhere to the filing requirements for both informal and formal complaints, which require the payment of statutorily mandated filing and handling fees, respectively. If the required fees do not accompany a filing, a claimant may lose access to the reparation forum. These revisions, and others, may affect a claimant's due process rights, which are difficult to quantify. However, since the reparation forum is but one available means to resolve contract disputes concerning perishable agricultural products in interstate commerce, AMS has determined that the provisions of this proposed rule would not have a significant economic impact on a substantial number of small entities.

Paperwork Reduction Act

In compliance with OMB regulations (5 CFR, Part 1320) which implement the Paperwork Reduction Act of 1995 (Pub. L. 104–13), the information collection and record keeping requirements covered by this proposed rule were approved by OMB on April 1, 1998, and expire on April 30, 2001.

List of Subjects in 7 CFR Part 47

Administrative practice and procedure, Agricultural commodities, Brokers.

For the reasons set forth in the preamble, 7 CFR Part 47 is proposed to be amended as follows:

PART 47—[AMENDED]

1. The authority citation for part 47 is revised to read as follows:

Authority: 7 U.S.C. 499o; 7 CFR 2.22(a)(1)(viii)(L), 2.79(a)(8)(xiii).

2. Section 47.2 is amended by removing paragraph (j)(2) and redesignating paragraph (j)(1) as paragraph (j) and revising paragraphs (e), (g), (h), (i), (s), and (t) to read as follows:

§ 47.2 Definitions.

* * * * *

(e) *Associate Administrator* means the Associate Administrator of the Service, or any officer or employee of the Service to whom authority has heretofore lawfully been delegated, or to whom authority may hereafter lawfully be delegated, to act in his or her stead.

* * * * *

(g) *Fruit and Vegetable Programs* means the Fruit and Vegetable Programs of the Agricultural Marketing Service.

(h) *Deputy Administrator* means the Deputy Administrator of the Fruit and Vegetable Programs or any officer or employee of the Fruit and Vegetable Programs to whom authority has heretofore lawfully been delegated, or to whom authority may hereafter lawfully be delegated by the Deputy Administrator, to act in his stead.

(i) *Examiner.* In connection with reparation proceedings, the term ''examiner'' is synonymous with ''presiding officer'' and means any attorney employed in the Office of the General Counsel of the Department, or in connection with reparation proceedings conducted pursuant to the documentary procedure in § 47.20, the term ''examiner'' may mean any other employee of the PACA Branch whose work is reviewed by an attorney employed in the Office of the General Counsel of the Department.

* * * * *

(s) *Mail* means to deposit an item in the United State Mail with postage affixed and addressed as necessary to cause it to be delivered to the address

shown by ordinary mail, or by certified mail or registered mail if specified, or to cause a properly addressed item to be delivered by a commercial or private mail delivery service to the address shown.

(t) *Re-mail* means to mail by ordinary mail to an address an item that has been returned after being sent to the same address by certified or registered mail or by a commercial or private mail delivery service.

5. In § 47.3, the first sentence in paragraph (a)(2) and paragraph (a)(2)(iv) are revised, in paragraph (a)(2)(vii) the word ''and'' is added between the words ''gross'' and ''net'', paragraph (c) is removed, and a new paragraph (a)(4) is added to read as follows:

§ 47.3 Institution of proceedings.

(a) * * *

(1) * * *

(2) Informal complaints may be made in writing by telegram, by letter, or by facsimile transmission, setting forth the essential details of the transaction complained of. * * *

* * * * *

(iv) Carrier identification;

* * * * *

(4) The informal complaint shall be accompanied by a filing fee of $60 as required by the Act.

* * * * *

7. Section 47.4 is amended by revising the section heading and paragraphs (b)(1), (b)(3), (c)(1), and (d)(1) to read as follows:

§ 47.4 Service and proof of service.

* * * * *

(b) *Service on party.* (1) Any complaint or other document initially served on a person to make that person a party respondent in a proceeding, a final order, or other document specifically ordered by the presiding officer or Judicial Officer to be served by certified or registered mail, or commercial or private mail delivery service, shall be deemed to be received by any party to a proceeding on the date of delivery by certified or registered mail, or commercial or private mail delivery service to the last known principal place of business of such party, last known principal place of business of the attorney or representative of record of such party, last known residence of such party if an individual: Provided, That, if any such document or paper is sent by certified, registered, commercial, or private mail, but is returned, it shall be deemed to be received by such party on the date of the re-mailing by ordinary mail to the same address.

* * * * *

(3) Any document or paper served other than by certified, registered, commercial, or private mail on any party to a proceeding shall be deemed to be received by such party on the date of:

* * * * *

(c) * * *

(1) Delivery by certified, registered, commercial, private or mail to the last known principal address of such person, last know principal place of business of the attorney or representative of record of such person, or last known residence of such person if an individual;

* * * * *

(d) * * *

(1) A certified or registered mail receipt returned by the postal service with a signature, or a signed receipt returned by a private or commercial mail delivery service;

* * * * *

8. In § 47.6, paragraphs (a) and (c) are revised to read as follows:

§ 47.6 Formal Complaints.

(a) *Filing; contents; number of copies.* (1) If the procedure provided in § 47.3(b) fails to effect an amicable or informal settlement, the person who filed the informal complaint may, if further proceedings are desired, file a formal complaint with the Fruit and Vegetable Programs. The formal complaint shall be filed within nine months of notification of the opportunity to proceed formally. Failure to file a formal reparation complaint within the time prescribed shall result in the waiver of further proceedings on the claim alleged in the informal complaint.

(2) The formal complaint shall set forth the information and be accompanied by the papers indicated in § 47.3(a)(2) and (3), including a statement of the amount of damages claimed, with the basis therefor, and the method of determination. The original and three copies shall be furnished for filing, and service on the respondent. If there is more than one respondent, a further copy shall be furnished for each additional respondent.

* * * * *

(c) *Service upon respondent; proof of service.* Upon receipt by the Fruit and Vegetable Programs of the formal complaint, the accompanying papers and the $300 handling fee required by the Act, a copy thereof shall be served by the Fruit and Vegetable Programs upon the respondent in accordance with § 47.4. If the complaint is not in the proper form, the Fruit and Vegetable Programs shall return it and inform the complainant of the deficiencies therein.

* * * * *

9. In § 47.8, paragraph (a) is amended by adding a sentence at the end of the section to read as follows:

§ 47.8 The answer.

(a) * * * If the answer includes a counterclaim, the answer shall be accompanied by the $300 handling fee required by the Act for formal complaints.

* * * * *

10. In § 47.9, paragraphs (b) and (c) are revised to read as follows:

§ 47.9 The reply.

* * * * *

(b) *Contents.* The reply shall be confined strictly to the matters alleged in the counterclaim or set-off in the answer. It shall contain a precise statement of the facts which constitute the grounds of defense to the counterclaim or set-off, and shall specifically admit, deny, or explain each of the allegations of the counterclaim or set-off, unless the complainant is without knowledge, in which case the reply shall so state; or a statement that the complainant admits all of the allegations of the counterclaim or set-off; or a statement containing an admission of liability in an amount less than that alleged in the counterclaim or set-off and a denial of liability for the remaining amount.

(c) *Failure to file reply.* Failure to file a reply shall be deemed a waiver of hearing on the counterclaim or set-off and an admission of the allegations contained in the counterclaim or set-off. If no reply is filed, the allegations of the counterclaim or set-off shall be deemed admitted.

11. In § 47.11, the introductory text of paragraph (c), and paragraphs (c)(4), (c)(9), (c)(10) and (c)(13) are revised to read as follows:

§ 47.11 Examiners.

* * * * *

(c) *Powers.* Subject to review by the Secretary, as provided in this Part, the examiner who is an attorney employed in the Office of the General Counsel of the Department, in any proceeding assigned to him or her, shall have power to:

* * * * *

(4) Issue subpoenas over the facsimile signature of the Secretary requiring the attendance and testimony of witnesses and the production of books, contracts, papers, and other documentary evidence;

* * * * *

(9) Require each party, prior to any hearing, to provide all other parties and the examiner with a copy of any exhibit that the party intends to introduce into evidence;

(10) Require each party, prior to any deposition, to provide all other parties and the examiner with a copy of any document that the party intends to use to examine a deponent;

* * * * *

(13) Do all acts and take all measures necessary for the maintenance of order and for the efficient conduct of the proceeding.

* * * * *

12. In § 47.12, the introductory text is revised to read as follows:

§ 47.12 Intervention.

At any time after the institution of a proceeding and before it has been submitted to the Secretary for final consideration, the Secretary or the examiner as defined in § 47.2(i)(1) may, upon petition in writing and for good cause show, permit any person to intervene therein. The peition shall state with preciseness and particularity:

* * * * *

13. In § 47.15, paragraphs (a)(1), (a)(2), (b) and (d)(1) are revised to read as follows:

§ 47.15 Oral hearing before the examiner.

(a) *When permissible.* (1) Where the amount of the damages claimed, either in the complaint or in the counterclaim, does not exceed $30,000, an oral hearing shall not be held, unless deemed necessary or desirable by the Fruit and Vegetable Programs or unless granted by the examiner as defined in § 47.2(i)(1), upon application of complainant or respondent setting forth the peculiar circumstances making an oral hearing necessary for a proper presentation of the case.

(2) Where the amount of damages claimed, either in the complaint or in the counterclaim, is in excess of $30,000, the procedure provided in this section (except as provided in § 47.20(b)(2)) shall be applicable.

(b) *Request for hearing.* Any party may request an oral hearing on the facts by including such request in the complaint. Failure to request an oral hearing within the time allowed for filing of the reply, or within 10 days after the expiration of the time allowed for filing an answer, shall constitute a waiver of such hearing, and any party so failing to request an oral hearing will be deemed to have agreed that the proceeding may be decided upon a record formed under the documentary procedure provided in § 47.20.

* * * * *

(d) *Appearances*—(1) *Representation.* In any proceeding under the Act, the parties may appear in person or by counsel or other representative.

* * * * *

14. In § 47.16, the introductory text of paragraph (a), and paragraph (b)(1) are revised to read as follows:

§ 47.16 Depositions.

(a) *Application for taking deposition.* Upon the application of a party to the proceeding, the examiner as defined in § 47.2(i)(1) may, except as provided in paragraph (b), at any time after the filing of the moving papers, order, over the facsimile signature of the Secretary, the taking of testimony by deposition. The application shall be in writing, shall be filed with the Hearing Clerk, and shall set forth:

* * * * *

(b) *Examiner's order for taking deposition.* (1) If, after examination of the application, the examiner is of the opinion that the deposition should be taken, or if the parties are using depositions in lieu of affidavits pursuant to § 47.20(b)(2), the examiner shall order the taking of the deposition. In no case, except for good cause shown, may the examiner order the taking of a deposition less than 10 days prior to the designated date of deposition. The order shall be filed with the Hearing Clerk upon the parties in accordance with § 47.4.

* * * * *

15. In § 47.17, a sentence is added at the end of paragraph (a) to read as follows:

§ 47.17 Subpoenas.

(a) *Issuance of subpoenas.* * * * Except for good cause shown, applications for subpoenas shall be filed with the Hearing Clerk at least 30 days prior to the designated date of hearing or deposition. Except for good cause shown, the examiner shall not issue subpoenas less than 20 days prior to the designated date of hearing or deposition.

* * * * *

16. In § 47.19, paragraphs (d)(1), (d)(4), (d)(5) and (d)(6) are revised to read as follows:

§ 47.19 Post-hearing procedure before the examiner.

* * * * *

(d) *Claim for award of fees and expenses*—(1) *Filing.* Prior to the close of the hearing, or within 20 days thereafter, each party may file with the Hearing Clerk a claim for the award of the fees and expenses which he incurred in connection with the oral hearing. No award of fees and expenses to the prevailing party and against the losing party shall be made unless a claim therefor has been filed, and failure to file a claim within the time allowed shall constitute a waiver thereof.

* * * * *

(4) *Service of claim.* A copy of each such claim filed shall be served by the Hearing Clerk on the other party or parties to the proceeding.

(5) *Objections to claim.* Within 20 days after being served with a copy of a claim for fees and expenses, the party so served may file with the Hearing Clerk written objections to the allowance of any or all of the items claimed. If evidence is offered in support of an objection, it must be in affidavit form. A copy of any such objections shall be served by the Hearing Clerk on the other party or parties.

(6) *Reply to objections to claim.* A claimant who is served with a copy of objections to his or her claim may, within 20 days after such service, file with the Hearing Clerk a reply to such objection. If evidence is offered in support of a reply, it must be in affidavit form. A copy of any such reply shall be served by the Hearing Clerk on the other party or parties.

* * * * *

17. In § 47.20, the section heading, the first sentence of paragraph (a), paragraphs (b)(1), (b)(2), and the introductory text of paragraph (h) are revised to read as follows:

§ 47.20 Documentary procedure.

(a) *In general.* The documentary procedure described in this section shall, whenever it is applicable as provided in paragraph (b) of this section, take the place and serve in lieu of the oral hearing procedure hereinbefore provided. Under the documentary procedure, the pleadings of the parties, if verified in accordance with paragraph (h) of this section, and any report of investigation filed with the hearing clerk pursuant to § 47.7 will be considered as evidence in the proceeding. * * *

(b) *When applicable*—(1) *Where damages claimed do not exceed $30,000.* The documentary procedure provided for in this section shall (except as provided in § 47.15(a)) be used in all reparation proceedings in which the amount of damages claimed, either in the complaint or in the counterclaim, does not exceed $30,000.

(2) *Where damages claimed exceed $30,000.* In any proceeding in which the amount of damages claimed, either in the complaint or in the counterclaim, is greater than $30,000, the examiner,

whenever he or she is of the opinion that proof may be fairly and adequately presented by use of the documentary procedure provided for in this section, shall suggest to the parties that they consent to the use of such procedure. Parties are free to consent to such procedure if they choose, and declination of consent will not affect or prejudice the rights or interests of any party. A party, if he or she has not waived oral hearing, may consent to the use of the documentary procedure on the condition that depositions rather than affidavits be used. In such case, if the other party agrees, depositions shall be required to be filed in lieu of verified statements. If any party who has not waived oral hearing does not consent to the use of the documentary procedure, the proceeding will be set for oral hearing. The suggestion that the documentary procedure be used need not originate with the examiner. Any party may address a request to the examiner asking that the documentary procedure be used.

* * * * *

(h) *Verification.* Verification shall be made under oath of any facts set forth in the pleading or statement, by the person who signs the pleading or statement. Certification by a notary public is insufficient. The form of verification may be as follows:

* * * * *

18. Section 47.21 is revised to read as follows:

§ 47.21 Transmittal of record.

The hearing clerk, immediately after the filing of the examiners' report, shall transmit to the Secretary the record of the proceeding. Such record shall include: The pleadings; motions and requests filed, and rulings thereon; the report of investigation conducted by the Fruit and Vegetable Programs; the transcript or record of the testimony taken at the hearing, together with the exhibits filed therein; any statements or stipulations filed under the documentary procedure; any documents or papers filed in connection with conferences; such proposed findings of fact, conclusions, and orders and briefs as may have been permitted to be filed in connection with the hearing as provided in § 47.19(b) and (c); such statements of objections, and briefs in support thereof, as may have been filed in the proceeding; and the examiner's report.

* * * * *

19. In § 47.24, the section heading and paragraph (a) are revised and a new paragraph (d) is added to read as follows:

§ 47.24 Rehearing, reargument, reconsideration of orders, reopening of hearings, reopening after default.

(a) *Petitions to rehear, reargue, and reconsider.* A petition for rehearing or reargument of the proceeding, or for reconsideration of the order, shall be made by petition to the Secretary filed with the Hearing Clerk within 20 days after the date of service of the order. Every such petition shall state specifically the matters claimed to have been erroneously decided and the alleged errors. If the Secretary concludes that the questions raised by the petition have been sufficiently considered in the issuance of the order, the Secretary shall dismiss the peition without service on the other party. Otherwise, the Secretary shall direct that a copy of the petition be served upon such party by the Hearing Clerk. The filing of a petition to rehear or reargue a proceeding, or to reconsider an order, shall automatically operate to set aside the order pending final action on the petition. Only one petition to rehear, reargue, or reconsider will be accepted from each party, except when a mathematical or typographical error appears in either the original decision and order or in the decision on reconsideration.

* * * * *

(d) *Reopening after default.* The party in default in the filing of an answer or reply required or authorized under this part may petition to reopen the proceeding at any time prior to the expiration of 30 days from the date of service of the default order. If, in the judgment of the examiner, after notice to and consideration of the views of the other party(ies), there is good reason for granting such relief, the party in default will be allowed 20 days from the date of the order reopening the proceeding to file an answer.

20. In § 47.25, the section heading and paragraph (d) are revised, paragraph (e) is removed and paragraph (f) is redesignated as paragraph (e) to read as follows:

§ 47.25 Filing; extensions of time; effective date of filing; computations of time; official notice.

* * * * *

(d) *Computations of time.* Saturdays, Sundays and holidays shall be included in computing the time allowed for the filing of any document or paper: Provided, That, when such time expires on a Saturday, Sunday or Federal holiday, such period shall be extended to include the next following business day.

* * * * *

21. Part 47 is amended by removing the words ''hearing clerk'' and adding in their place the words ''Hearing Clerk'', everywhere they appear.

22. Part 47 is amended by removing the word ''Division'' and adding in its place the words ''Fruit and Vegetable Programs'', everywhere they appear.

23. Part 47 is amended by removing the words ''Director'' and ''Director's'', and adding in their place the words ''Deputy Administrator'' and ''Deputy Administrator's'' respectively, everywhere they appear.

Dated: January 21, 1999.

Robert C. Keeney,

Deputy Administrator, Fruit and Vegetable Programs.

[FR Doc. 99–1968 Filed 1–27–99; 8:45 am]

BILLING CODE 3410–02–P

DEPARTMENT OF AGRICULTURE

Animal and Plant Health Inspection Service

7 CFR Part 319

[Docket No. 98–021–1]

Cut Flowers

AGENCY: Animal and Plant Health Inspection Service, USDA.

ACTION: Proposed rule.

SUMMARY: We are proposing to amend the cut flowers regulations to provide that APHIS inspectors issue a written notice when pests are detected and action on the part of the importer is required. We are also proposing to amend the regulations to make it clear that the importer of cut flowers is responsible for all costs of destroying or otherwise disposing of pest-infested cut flowers should the importer choose not to treat or re-export them. These proposed changes would help reduce the risk of cut flowers introducing plant pests into the United States by ensuring that any necessary treatment or other required actions are completed.

DATES: Consideration will be given only to comments received on or before March 29, 1999.

ADDRESSES: Please send an original and three copies of your comments to Docket No. 98–021–1, Regulatory Analysis and Development, PPD, APHIS, suite 3C03, 4700 River Road Unit 118, Riverdale, MD 20737–1238. Please state that your comments refer to Docket No. 98–021–1. Comments may be inspected at USDA, room 1141, South Building, 14th Street and Independence Avenue, SW., Washington, DC, between 8 a.m. and 4:30 p.m., Monday through Friday, except holidays. Persons wishing to

inspect comments are requested to call ahead on (202) 690–2817 to facilitate entry into the comment reading room.

FOR FURTHER INFORMATION CONTACT: Mr. Peter M. Grosser, Senior Import Specialist, Phytosanitary Issues Management Team, PPQ, APHIS, 4700 River Road Unit 140, Riverdale, MD 20737–1231, (301) 734–6799; or e-mail: Peter.M.Grosser@usda.gov.

SUPPLEMENTARY INFORMATION:

Background

The regulations in 7 CFR part 319 prohibit or restrict the importation of plants, plant parts, and related materials to prevent the introduction of foreign plant pests into the United States.

The importation of cut flowers into the United States is regulated under ''Subpart—Cut Flowers,'' contained in §§ 319.74 through 319.74–4 (referred to below as the regulations).

The regulations require that all cut flowers be inspected for injurious insects and plant diseases at the port of entry. If cut flowers are found to be infested, an inspector may require the cut flowers to be cleaned or treated before allowing them entry into the United States. If treatment is required, the importer or his agent is given the option of: (1) Cleaning or treating the cut flowers as prescribed by the inspector until free of plant pests; (2) shipping the cut flowers to a point outside the United States; or (3) abandoning the cut flowers at the port of entry for destruction. If the inspector finds that the pests cannot be eliminated by cleaning or treatment, the cut flowers may be refused entry into the United States and must be shipped to a point outside the United States or abandoned for destruction.

Under the regulations, all costs of treatment are to be borne by the importer or his agent, as are the costs of shipping cut flowers to a point outside the United States. However, if the importer or his agent elects to abandon imported cut flowers at the port of entry, the regulations do not explicitly require the importer or his agent to bear the costs of destroying the flowers.

APHIS' policy regarding the costs associated with inspections, which is stated in the ''costs and charges'' sections or paragraphs throughout our regulations in title 7, chapter III, is that the services of an inspector during regularly assigned hours of duty and at the usual places of duty will be furnished without cost, but that all additional costs associated with the inspection, treatment, movement, storage, or destruction of articles subject to our regulations are the responsibility of the importer or owner.

Due to increasing volumes of abandoned cut flowers that have been destroyed at government expense, especially at Miami International Airport, which handles over 90 percent of all cut flower importations into the United States, we are proposing to amend the regulations to require that importers be responsible for the cost of destroying infested or infected cut flowers, just as they are responsible for the cost of any other treatment under the regulations. This proposed change, which would be set out in a new § 319.74–4, ''Costs and Charges,'' is consistent with the policy described in the previous paragraph. This proposed change to the cut flowers regulations would make ''Subpart—Cut Flowers'' more consistent with our regulations elsewhere in title 7, chapter III.

We are also proposing to amend the regulations to provide that an inspector would issue the importer of cut flowers or his agent a written notification in the event that an inspector found imported cut flowers to be infested with injurious insects or infected with plant diseases. Specifically, an inspector would issue an emergency action notification (EAN) (PPQ Form 523), which would outline in detail the options available to the importer. The EAN would also recommend specific treatments, if available; notify the importer that reexportation and destruction of cut flowers are permissible alternatives to treatment; and clearly state that any actions ordered on the emergency action notification and the cost of performing those actions would be the responsibility of the importer. Further, we would also amend the regulations to state that the importer of infested or infected cut flowers must respond to the orders on the EAN within the period of time specified on the EAN by the inspector. In the event that the importer does not respond by the specified time, APHIS would arrange for the destruction, disposal, treatment, or reexportation of the cut flowers and would hold the importer responsible for all costs associated with such actions.

Further, as part of our effort to make it clear who would be responsible for cut flowers being imported into the United States, we are also proposing to revise the terminology we use to refer to the importer of cut flowers. The current regulations use the term ''importer or his agent.'' We are proposing to replace that term with ''importer, owner, or agent or representative of the importer or owner'' in order to encompass the range of individuals who may be held responsible for cleaning, treating, transporting, or destroying cut flowers and for the costs of doing so.

We are also proposing to make several nonsubstantive editorial and organizational changes to the regulations, including removing an outdated reference to ''special quarantine or other restrictive orders,'' updating definitions, and revising and reorganizing the subpart to make the regulations easier to understand and more consistent with the rest of the regulations in part 319. These proposed changes would not alter any current requirements. The following table shows where the current provisions in ''Subpart—Cut Flowers'' can be found in the proposed regulations:

Current section	Proposed section
319.74(a)	Removed.
319.74(b)	Removed.
319.74(c)	319.74–1.
319.74–1(a)	319.74–1.
319.74–1(b)	319.74–1.
319.74–2	319.74–2(a).
319.74–3(a)	319.74–2(a), (b), and (c)(1).
319.74–3(b)	319.74–2(b), 319.74–4.
319.74–3(c)	319.74–2(c)(2).
319.74–4	319.74–3.

Executive Order 12866 and Regulatory Flexibility Act

This proposed rule has been reviewed under Executive Order 12866. The rule has been determined to be not significant for purposes of Executive Order 12866 and, therefore, has not been reviewed by the Office of Management and Budget.

In accordance with 5 U.S.C. 603, we have performed an Initial Regulatory Flexibility Analysis, which is set out below, regarding the impact of this proposed rule on small entities. Based on the information we have, there is no basis to conclude that this rule will result in any significant economic impact on a substantial number of small entities. However, we do not currently have all of the data necessary for a comprehensive analysis of the economic impacts of this proposed rule on small entities. Therefore, we are inviting comments on potential economic impacts. In particular, we are interested in determining the number and kind of small entities that may incur benefits or costs from the implementation of this proposed rule.

Under the Federal Plant Pest Act (7 U.S.C. 150aa–150jj) and the Plant Quarantine Act (7 U.S.C. 151–165, and 167), the Secretary of Agriculture is authorized to regulate the importation of plants and plant products to prevent the introduction of injurious plant pests.

We are proposing to amend the cut flowers regulations to make it clear that

the person importing cut flowers, and not APHIS, is responsible for the costs of destroying cut flowers when pests are detected and the cut flowers will not be treated or reexported. We are also proposing to provide for inspectors to issue a written notice when pests are detected and action on the part of the importer is required. These proposed changes would help reduce the risk of cut flowers introducing plant pests into the United States by ensuring that any necessary treatment or other required actions are completed.

This proposed rule would also help reduce costs for the government because it would explicitly require that the costs of destroying infested or infected cut flowers be the responsibility of the importer, owner, or agent or representative of the importer or owner. It is estimated that approximately 200 to 400 boxes of cut flowers are abandoned each month at Miami International Airport, the port of entry for more than 90 percent of foreign cut flowers. Estimates of the annual cost to APHIS for the disposal or destruction of cut flowers range from $100,000 to $240,000.

The entities potentially affected by this proposed rule are importers and others in the United States who are involved in the importation of cut flowers. This proposed rule would increase costs for importers, who would be required to absorb the cost of destroying infested or infected flowers at U.S. ports of entry. The number and size of those entities potentially affected by this proposed rule is unknown.

It is reasonable to assume that most of the entities potentially affected by this proposed rule are small by U.S. Small Business Administration (SBA) standards. In 1992, 99 percent of 4,322 wholesalers of flowers, nursery stock, and florists' supplies were considered small entities. The magnitude of the potential economic impact on small entities is not available.

There is reason to believe that the overall economic impact of this proposed rule on small entities would be insignificant, given that the volume of cut flowers abandoned at U.S. ports of entry is very small compared to the total volume of imported cut flowers allowed entry into the United States. In 1996, the United States imported approximately 2.5 billion fresh cut flower stems through Miami International Airport. No more than 72,000 cut flowers are abandoned yearly at Miami International Airport. Abandoned cut flowers, therefore, represent only a small percentage of the overall volume of cut flower importations into the United States.

Two alternatives to this proposed rule were considered: (1) To make no changes in the regulations and (2) to begin charging importers for destruction by APHIS of abandoned cut flowers without making changes to the regulations. We rejected the first alternative—making no change in the regulations—after determining that the costs to APHIS are too high to continue destroying or disposing of abandoned cut flowers at APHIS' expense. We also rejected the second alternative—charging importers for destruction by APHIS of abandoned cut flowers without making changes to the regulations—because we believe it is necessary to clarify our regulations regarding this issue since they do not currently state that importers are responsible for abandoned cut flowers. Because we have elected to exercise our authority to recover all costs that we incur when disposing of abandoned cut flowers, we believe it is necessary to amend the cut flowers regulations to make them more consistent with our regulations elsewhere in title 7, chapter III, by requiring that the importer, owner, or agent or representative of the importer or owner of cut flowers pay all additional costs associated with the importation of cut flowers. APHIS would continue to provide the services of an inspector during regular hours of duty at the usual place of duty at no cost to the importer.

Executive Order 12988

This proposed rule has been reviewed under Executive Order 12988, Civil Justice Reform. If this proposed rule is adopted: (1) All State and local laws and regulations that are inconsistent with this rule will be preempted; (2) no retroactive effect will be given to this rule; and (3) administrative proceedings will not be required before parties may file suit in court challenging this rule.

Paperwork Reduction Act

This proposed rule contains no new information collection or recordkeeping requirements under the Paperwork Reduction Act of 1995 (44 U.S.C. 3501 *et seq.*).

List of Subjects in 7 CFR Part 319

Bees, Coffee, Cotton, Fruits, Honey, Imports, Incorporation by reference, Nursery Stock, Plant diseases and pests, Quarantine, Reporting and recordkeeping requirements, Rice, Vegetables.

Accordingly, we propose to amend 7 CFR part 319 as follows:

PART 319—FOREIGN QUARANTINE NOTICES

1. The authority citation for part 319 would continue to read as follows:

Authority: 7 U.S.C. 150dd, 150ee, 150ff, 151–167, 450, 2803, and 2809; 21 U.S.C. 136 and 136a; 7 CFR 2.22, 2.80, and 371.2(c).

2. Subpart—Cut Flowers would be revised to read as follows:

Subpart—Cut Flowers

319.74–1 Definitions.
319.74–2 Conditions governing the entry of cut flowers.
319.74–3 Importations by the Department.
319.74–4 Costs and charges.

Subpart—Cut Flowers

§ 319.74–1 Definitions.

Administrator. The Administrator of the Animal and Plant Health Inspection Service, United States Department of Agriculture, or any employee of the United States Department of Agriculture delegated to act in his or her stead.

Cut flower. The highly perishable commodity known in the commercial flower-producing industry as a cut flower, which is the severed portion of a plant, including the inflorescence, and any parts of the plant attached to it, in a fresh state. This definition does not include dried, bleached, dyed, or chemically treated decorative plant materials; filler or greenery, such as fern fronds and asparagus plumes, frequently packed with fresh cut flowers; or Christmas greenery, such as holly, mistletoe, and Christmas trees.

Inspector. Any individual authorized by the Administrator to enforce this subpart.

United States. All of the States, the District of Columbia, Guam, the Northern Mariana Islands, Puerto Rico, the Virgin Islands of the United States, and all other territories or possessions of the United States.

§ 319.74–2 Conditions governing the entry of cut flowers.

(a) *Inspection.* All cut flowers imported into the United States must be made available to an inspector for examination and must remain at the port of entry until released, or authorized further movement, by an inspector.

(b) *Actions to prevent the introduction of plant pests; notice by an inspector.* If an inspector orders any disinfection, cleaning, treatment, reexportation, or other action with regard to imported cut flowers that are found to be infested with injurious plant pests or infected with diseases, the inspector will provide an emergency action notification (PPQ Form 523) to the importer, owner, or

agent or representative of the importer or owner of the cut flowers. The importer, owner, or agent or representative of the importer or owner must, within the time specified in the PPQ Form 523 and at his or her own expense, destroy the cut flowers, ship them to a point outside the United States, move them to an authorized site, and/or apply treatments, clean, or apply other safeguards to the cut flowers as prescribed by the inspector on the PPQ Form 523. Further, if the importer, owner, or agent or representative of the importer or owner fails to follow the conditions on PPQ form 523 by the time specified on the form, APHIS will arrange for destruction of the cut flowers, and the importer, owner, or agent or representative of the importer or owner will be responsible for all costs incurred. Cut flowers that have been cleaned or treated must be made available for further inspection, cleaning, and treatment at the option of the inspector at any time and place indicated by the inspector before the requirements of this subpart will have been met. Neither the Department of Agriculture nor the inspector may be held responsible for any adverse effects of treatment on imported cut flowers.

(c) *Fumigation for agromyzids.* (1) Cut flowers imported from any country or locality and found upon inspection to be infested with agromyzids (insects of the family Agromyzidae) must be fumigated at the time of importation with methyl bromide in accordance with paragraph (c)(2) of this section, with the following exceptions:

(i) Fumigation will not be required for cut flowers imported from Canada (including Labrador and Newfoundland) or Mexico because of the finding of agromyzids.

(ii) Fumigation will not be required for cut flowers of *Chrysanthemum* spp. imported from Colombia or the Dominican Republic because of the finding of agromyzids, when such agromyzids are identified by an inspector to be only agromyzids of the species *Liriomyza trifolii* (Burgess).

(2) *Fumigation schedules.* Fumigation of cut flowers for agromyzids (insects of the family Agromyzidae) must consist of fumigation with methyl bromide at normal atmospheric pressure in a chamber or under a tarpaulin in accordance with one of the following schedules:

1½ lbs. per 1,000 cu. ft. for 2 hours at 80–90 °F.

(19 oz. concentration at first ½ hour)
(12 oz. concentration at 2 hours); or

2 lbs. per 1,000 cu. ft. for 2 hours at 70–79 °F.

(24 oz. concentration at first ½ hour)
(16 oz. concentration at 2 hours); or

2½ lbs. per 1,000 cu. ft. for 2 hours at 60–69 °F.

(30 oz. concentration at first ½ hour)
(20 oz. concentration at 2 hours); or

3 lbs. per 1,000 cu. ft. for 2 hours at 50–59 °F.

(36 oz. concentration at first ½ hour)
(24 oz. concentration at 2 hours); or

3½ lbs. per 1,000 cu. ft. for 2 hours at 40–49 °F.

(41 oz. concentration at first ½ hour)
(27 oz. concentration at 2 hours)

Note: There is a possibility that some cut flowers could be damaged by such fumigation.

(d) *Refusal of entry.* If an inspector finds that imported cut flowers are so infested with a plant pest or infected with disease that, in the judgment of the inspector, they cannot be cleaned or treated, or if they contain soil or other prohibited contaminants, the entire lot may be refused entry into the United States.

§ 319.74–3 Importations by the Department.

The U.S. Department of Agriculture may import cut flowers for experimental or scientific purposes under such conditions and restrictions as the Administrator may prescribe to prevent the dissemination of plant pests.

§ 319.74–4 Costs and charges.

The Animal and Plant Health Inspection Service, U.S. Department of Agriculture, will be responsible only for the costs of providing the services of an inspector during regularly assigned hours of duty and at the usual places of duty (provisions relating to costs for other services of an inspector are contained in 7 CFR part 354). The importer, owner, or agent or representative of the importer or owner of cut flowers is responsible for all additional costs of inspection, treatment, movement, storage, or destruction ordered by an inspector under this subpart, including the costs of any labor or chemicals, packing materials, or other supplies required.

Done in Washington, DC, this 21st day of January 1999.

Craig A. Reed,

Administrator, Animal and Plant Health Inspection Service.

[FR Doc. 99–1918 Filed 1–27–99; 8:45 am]

BILLING CODE 3410–34–P

DEPARTMENT OF AGRICULTURE

Agricultural Marketing Service

7 CFR Part 932

[Docket No. FV99–932–1 PR]

Olives Grown in California; Increased Assessment Rate

AGENCY: Agricultural Marketing Service, USDA.

ACTION: Proposed rule.

SUMMARY: This rule would increase the assessment rate from $17.10 to $26.18 per ton of olives established for the California Olive Committee (Committee) under Marketing Order No. 932 for the 1999 and subsequent fiscal years. The Committee is responsible for local administration of the marketing order which regulates the handling of olives grown in California. Authorization to assess olive handlers enables the Committee to incur expenses that are reasonable and necessary to administer the program. The fiscal year began January 1 and ends December 31. The assessment rate would remain in effect indefinitely unless modified, suspended, or terminated.

DATES: Comments must be received by March 1, 1999.

ADDRESSES: Interested persons are invited to submit written comments concerning this rule. Comments must be sent to the Docket Clerk, Fruit and Vegetable Programs, AMS, USDA, room 2525–S, P.O. Box 96456, Washington, DC 20090–6456; Fax: (202) 720–5698; or E-mail: moabdocket__clerk@usda.gov. Comments should reference the docket number and the date and page number of this issue of the **Federal Register** and will be available for public inspection in the Office of the Docket Clerk during regular business hours.

FOR FURTHER INFORMATION CONTACT: Diane Purvis, Marketing Assistant, and Mary Kate Nelson, Marketing Specialist, California Marketing Field Office, Fruit and Vegetable Programs, AMS, USDA, 2202 Monterey Street, Suite 102B, Fresno, California 93721; telephone: (209) 487–5901; Fax: (209) 487–5906; or George Kelhart, Technical Advisor, Marketing Order Administration Branch, Fruit and Vegetable Programs, AMS, USDA, room 2525–S, P.O. Box 96456, Washington, DC 20090–6456; telephone: (202) 720–2491, Fax: (202) 720–5698. Small businesses may request information on compliance with this regulation, or obtain a guide on complying with fruit, vegetable, and specialty crop marketing agreements and orders by contacting Jay Guerber,

Marketing Order Administration Branch, Fruit and Vegetable Programs, AMS, USDA, room 2525–S, P.O. Box 96456, Washington, DC 20090–6456; telephone: (202) 720–2491, Fax: (202) 720–5698, or E-mail: Jay__N__Guerber@usda.gov. You may view the marketing agreement and order small business compliance guide at the following web site: http://www.ams.usda.gov/fv/moab.html.

SUPPLEMENTARY INFORMATION: This rule is issued under Marketing Agreement No. 148 and Order No. 932, both as amended (7 CFR part 932), regulating the handling of olives grown in California, hereinafter referred to as the ''order.'' The marketing agreement and order are effective under the Agricultural Marketing Agreement Act of 1937, as amended (7 U.S.C. 601–674), hereinafter referred to as the ''Act.''

The Department of Agriculture (Department) is issuing this rule in conformance with Executive Order 12866.

This rule has been reviewed under Executive Order 12988, Civil Justice Reform. Under the marketing order now in effect, California olive handlers are subject to assessments. Funds to administer the order are derived from such assessments. It is intended that the assessment rate as issued herein will be applicable to all assessable olives beginning on January 1, 1999, and continue until amended, suspended, or terminated. This rule will not preempt any State or local laws, regulations, or policies, unless they present an irreconcilable conflict with this rule.

The Act provides that administrative proceedings must be exhausted before parties may file suit in court. Under section 608c(15)(A) of the Act, any handler subject to an order may file with the Secretary a petition stating that the order, any provision of the order, or any obligation imposed in connection with the order is not in accordance with law and request a modification of the order or to be exempted therefrom. Such handler is afforded the opportunity for a hearing on the petition. After the hearing the Secretary would rule on the petition. The Act provides that the district court of the United States in any district in which the handler is an inhabitant, or has his or her principal place of business, has jurisdiction to review the Secretary's ruling on the petition, provided an action is filed not later than 20 days after the date of the entry of the ruling.

This rule would increase the assessment rate established for the Committee for the 1999 and subsequent fiscal years from $17.10 per ton to $26.18 per ton of olives.

The California olive marketing order provides authority for the Committee, with the approval of the Department, to formulate an annual budget of expenses and collect assessments from handlers to administer the program. The members of the Committee are producers and handlers of California olives. They are familiar with the Committee's needs and with the costs for goods and services in their local area and are thus in a position to formulate an appropriate budget and assessment rate. The assessment rate is formulated and discussed in a public meeting. Thus, all directly affected persons have an opportunity to participate and provide input.

For the 1998 and subsequent fiscal years, the Committee recommended, and the Department approved, an assessment rate that would continue in effect from fiscal year to fiscal year unless modified, suspended, or terminated by the Secretary upon recommendation and information submitted by the Committee or other information available to the Secretary.

The Committee met on December 10, 1998, and unanimously recommended 1999 expenditures of $1,845,185 and an assessment rate of $26.18 per ton of olives. In comparison, last year's budgeted expenditures were $1,750,000. The assessment rate of $26.18 is $9.08 higher than the rate currently in effect. A higher assessment rate is needed because:

(1) Assessable tonnage is down for the second year in a row due in large part this crop year to adverse conditions created by the weather phenomenon El Niño. Assessable tonnage in 1996 totaled 144,075 tons, in 1997 it totaled 85,585 tons, and in 1998 the assessable tonnage totaled 67,990 tons; and

(2) Rather than reduce 1999 expenditures, the Committee determined that more funds are needed to continue the development of an improved mechanical olive harvester that can efficiently harvest most orchard configurations. The California olive industry recognized that it needs to make cutting harvesting costs a top priority if it is to remain competitive with imports. Consequently, after considerable discussion, the Committee recommended increasing the $52,000 1999 Research Fund initially suggested by Committee members by an additional $250,000. The additional $250,000 is to be used specifically for the purpose of further development of a mechanical harvester that can be more effectively utilized by growers throughout the California olive industry while at the same time reducing harvesting costs.

The following table compares major budget expenditure recommendations for the 1999 fiscal year with those from last year:

Budget expenditure	1998	1999
Administration ...	$357,900	$346,485
Research	50,000	302,000
Market Development	1,308,500	1,190,500

The assessment rate recommended by the Committee was derived by considering anticipated expenses, actual receipts of olives, and additional pertinent factors. The quantity of assessable olives for the 1999 fiscal year is 67,990 tons which should provide $1,779,978 in assessment income. Income derived from handler assessments, interest, and carryover of reserve funds would be adequate to cover budgeted expenses. Funds in the reserve (currently $316,409) would be kept within the maximum permitted by the order (approximately one fiscal year's expenses, § 932.40).

The proposed assessment rate would continue in effect indefinitely unless modified, suspended, or terminated by the Secretary upon recommendation and information submitted by the Committee or other available information.

Although this assessment rate would be in effect for an indefinite period, the Committee would continue to meet prior to or during each fiscal year to recommend a budget of expenses and consider recommendations for modification of the assessment rate. The dates and times of Committee meetings are available from the Committee or the Department. Committee meetings are open to the public and interested persons may express their views at these meetings. The Department would evaluate Committee recommendations and other available information to determine whether modification of the assessment rate is needed. Further rulemaking would be undertaken as necessary. The Committee's 1999 budget and those for subsequent fiscal years would be reviewed and, as appropriate, approved by the Department.

Pursuant to requirements set forth in the Regulatory Flexibility Act (RFA), the Agricultural Marketing Service (AMS) has considered the economic impact of this rule on small entities. Accordingly, AMS has prepared this initial regulatory flexibility analysis.

The purpose of the RFA is to fit regulatory actions to the scale of business subject to such actions in order that small businesses will not be unduly or disproportionately burdened.

Marketing orders issued pursuant to the Act, and the rules issued thereunder, are unique in that they are brought about through group action of essentially small entities acting on their own behalf. Thus, both statutes have small entity orientation and compatibility.

There are approximately 1,200 producers of olives in the production area and 3 handlers subject to regulation under the marketing order. Small agricultural producers have been defined by the Small Business Administration (13 CFR 121.601) as those having annual receipts less than $500,000, and small agricultural service firms are defined as those whose annual receipts are less than $5,000,000. None of the olive handlers may be classified as small entities, while the majority of olive producers may be classified as small entities.

This rule would increase the assessment rate established for the Committee and collected from handlers for the 1999 and subsequent fiscal years from $17.10 per ton to $26.18 per ton of olives. The Committee recommended 1999 expenditures of $1,845,185 and an assessment rate of $26.18 per ton. The proposed assessment rate of $26.18 is $9.08 higher than the 1998 rate. The quantity of assessable olives for the 1999 fiscal year is 67,990 tons. Thus, the $26.18 rate should provide $1,779,978 in assessment income and be adequate to meet this year's budgeted expenses, when combined with funds from the authorized reserve and interest income.

The following table compares major budget expenditure recommendations for the 1999 fiscal year with those from last year:

Budget expenditure	1998	1999
Administration ...	$357,900	$346,485
Research	50,000	302,000
Market Development	1,308,500	1,190,500

A higher assessment rate is needed for 1999 because:

(1) Assessable tonnage is down for the second year in a row due in large part this crop year to adverse conditions created by the weather phenomenon El Niño. Assessable tonnage in 1996 totaled 144,075 tons, in 1997 it totaled 85,585 tons, and in 1998 the assessable tonnage totaled 67,990 tons; and

(2) Rather than reduce 1999 expenditures, the Committee determined that more funds are needed to continue the development of an improved mechanical olive harvester that can efficiently harvest most orchard configurations. The California olive industry recognized that it needs to make cutting harvesting costs a top priority if it is to remain competitive with imports. Consequently, after considerable discussion, the Committee recommended increasing the $52,000 1999 Research Fund initially suggested by Committee members by an additional $250,000. The additional $250,000 is to be used specifically for the purpose of further development of a mechanical harvester that can be more effectively utilized by growers throughout the California olive industry while at the same time reducing harvesting costs.

The Committee reviewed and unanimously recommended 1999 expenditures of $1,845,185 which included the $250,000 increase in Research for further development of an improved mechanical olive harvester. To finance this additional research allotment, the Committee considered reducing the Market Development budget item by amounts ranging from $100,000 to $309,530. The prevailing opinion was that the money allocated for 1999 Market Development recommended by the Marketing Subcommittee remain the same ($1,190,500) as initially suggested, which is $118,000 less than budgeted for 1998. The Committee members believed that the Administrative Budget had already been reduced as low as possible ($11,415 less than for 1998). The only other alternative was to increase the assessment rate. The assessment rate of $26.18 per ton of assessable olives was then derived by considering anticipated expenses, actual receipts of olives, and additional pertinent factors.

Based on a review of historical and preliminary marketing and price information, grower revenue for the 1998–99 crop year (August 1 through July 31) is estimated to be approximately $39,500,000. Therefore, the estimated assessment revenue of $1,779,978 for the 1999 fiscal year will be approximately 4.5 percent of grower revenue.

This action would increase the assessment obligation imposed on handlers. While assessments impose some additional costs on handlers, the costs are minimal and uniform on all handlers. Some of the additional costs may be passed on to producers. However, these costs would be offset by the benefits derived by the operation of the marketing order. In addition, the Committee's meeting was widely publicized throughout the California olive industry, and all interested persons were invited to attend the meeting and participate in Committee deliberations on all issues. Like all Committee meetings, the December 10, 1998, meeting was a public meeting and all entities, both large and small, were able to express views on this issue. Finally, interested persons are invited to submit information on the regulatory and informational impacts of this action on small businesses.

This proposed rule would impose no additional reporting or recordkeeping requirements on California olive handlers. As with all Federal marketing order programs, reports and forms are periodically reviewed to reduce information requirements and duplication by industry and public sector agencies.

The Department has not identified any relevant Federal rules that duplicate, overlap, or conflict with this rule.

A 30-day comment period is provided to allow interested persons to respond to this proposed rule. Thirty days is deemed appropriate because: (1) The Committee needs to have sufficient funds to pay its expenses which are incurred on a continuous basis; (2) the 1999 fiscal year began on January 1, 1999, and the order requires that the rate of assessment for each fiscal year apply to all assessable olives handled during such fiscal year; (3) all three handlers are represented on the Committee and participated in deliberations, (4) and all handlers are aware of this action which was unanimously recommended by the Committee at a public meeting and is similar to other assessment rate actions issued in past years.

List of Subjects in 7 CFR Part 932

Marketing agreements, Olives, Reporting and recordkeeping requirements.

For the reasons set forth in the preamble, 7 CFR part 932 is proposed to be amended as follows:

PART 932—OLIVES GROWN IN CALIFORNIA

1. The authority citation for 7 CFR part 932 continues to read as follows:

Authority: 7 U.S.C. 601–674.

2. Section 932.230 is proposed to be revised to read as follows:

§ 932.230 Assessment rate.

On and after January 1, 1999, an assessment rate of $26.18 per ton is established for California olives.

Dated: January 22, 1999.

Robert C. Keeney,

Deputy Administrator, Fruit and Vegetable Programs.

[FR Doc. 99–1969 Filed 1–27–99; 8:45 am]

BILLING CODE 3410–02–P

NORTHEAST DAIRY COMPACT COMMISSION

7 CFR Parts 1307 and 1308

Over-Order Price Regulation

AGENCY: Northeast Dairy Compact Commission.

ACTION: Proposed rule; notice of hearing.

SUMMARY: The Northeast Dairy Compact Commission proposes to amend the method for determining the amount of the administrative assessment charged to milk handlers. The proposed rule would give the Commission discretion, in any given month, to waive the administrative assessment entirely, or to set the rate at an amount less than the current flat rate of 3.2c per hundredweight of fluid milk. The Commission's goal is to maintain a reserve account in the range of 80% to 120% of four-months operating expenses, as determined to be necessary in the budget approved by the Commission. However, his range would not be binding on the Commission and the Commission would at all times retain discretion whether to waive the administrative assessment or to set the rate at an amount less than 3.2 cents. The Commission also invites comments on whether the rule should be amended to permit the Commission to adjust the administrative assessment upward, from the current rate of 3.2c, in exceptional circumstances and, if so, what exceptional circumstances would justify such an adjustment. Finally, the Commission proposes to promulgate a new rule that would require handlers to make payment to the Compact Commission by electronic funds transfer, if the total amount due is greater than $25,000.

DATES: A public hearing will be held on March 3, 1999 at 9 a.m. Sworn and notarized written testimony, comments and exhibits may be submitted until 5 p.m. on March 17, 1999.

ADDRESSES: The public hearing will be held at Tuck Library, Chubb Auditorium, 30 Park Street, Concord, New Hampshire. Mail, or deliver, sworn and notarized testimony, comments and exhibits to: Northeast Dairy Compact Commission, 34 Barre Street, Suite 2, Montpelier, Vermont 05602.

FOR FURTHER INFORMATION CONTACT: Kenneth M. Becker, Executive Director, Northeast Dairy Compact Commission at the above address or by telephone at (802) 229–1941, or by facsimile at (802) 229–2028.

SUPPLEMENTARY INFORMATION:

I. Background

The Northeast Dairy Compact Commission (''Commission'') was established under authority of the Northeast Interstate Dairy Compact (''Compact''). The Compact was enacted into law by each of the six participating New England states as follows: Connecticut—Pub. L. 93–320; Maine—Pub. L. 89–437, as amended, Pub. L. 93–274; Massachusetts—Pub. L. 93–370; New Hampshire—Pub. L. 93–336; Rhode Island—Pub. L. 93–106; Vermont—Pub. L. 93–57. In accordance with Article I, Section 10 of the United States Constitution, Congress consented to the Compact in Pub. L. 104–127 (FAIR Act), Section 147, codified at 7 U.S.C. 7256. Subsequently, the United States Secretary of Agriculture, pursuant to 7 U.S.C. 7256(1), authorized implementation of the Compact.

Pursuant to its rulemaking authority under Article V, Section 11 of the Compact, the Commission concluded an informal rulemaking process and voted to adopt a compact over-order price regulation on May 30, 1997.[1] The Commission subsequently amended and extended the compact over-order price regulation.[2] In 1998, the Commission further amended specific provisions of the over-order price regulation.[3] The current compact over-order price regulation is codified at 7 CFR Chapter XIII.

On November 27, 1998, the Commission issued a notice of proposed rulemaking proceedings on several subjects and issues, including whether the amount of, or method for determining, the administrative assessment should be amended.[4] The Commission held a public hearing to receive testimony on December 11, 1998 in Boxborough, Massachusetts and comments were received until 5 p.m. on December 31, 1998.

On January 13, 1999, the Commission held its deliberative meeting, pursuant to 7 CFR 1361.8, to consider all oral and written comments received at the public hearing and the additional comments received by the Commission's published comment deadline of December 31, 1998, and to deliberate and act on the proposed subjects and issues rulemaking regarding whether the amount of, or method for determining, the administrative assessment should be amended.[5]

Based on the oral testimony and written comments and exhibits received in that proceeding, the Commission proposes to amend the method for determining the amount of the administrative assessment charged to milk handlers.[6] The proposed rule would give the Commission discretion, in any given month, to waive the administrative assessment entirely, or to set the rate at an amount less than the current flat rate of 3.2¢ per hundredweight of fluid milk. The waiver or reduction would be based on the Commission's reserves and expenses. The Commission's goal is to maintain a reserve account in the range of 80% to 120% of four-months operating expenses, as determined to be necessary in the budget approved by the Commission. However, this range would not be binding on the Commission and the Commission would at all times retain discretion whether to waive the administrative assessment or to set the rate at an amount less than 3.2 cents. The Commission would welcome public comments on these proposals. The Commission also invites comments on whether the rule should be amended to permit the Commission to adjust the administrative assessment upward, from the current rate of 3.2¢, in exceptional circumstances and, if so, what exceptional circumstances would justify such an adjustment.

In addition to the proposed amendments to the administrative assessment, the Commission also proposes to promulgate a new rule that would require handlers to make payment to the Compact Commission by electronic funds transfer, if the total amount due is greater than $25,000.

II. Summary and Analysis of Issues and Comments

Administrative Assessment

The Commission received oral and written testimony and comment from the Commission's Regulations Administrator, Carmen Ross, and eight commenters in the subjects and issues rulemaking proceeding regarding whether the amount of, or method for determining, the administrative assessment should be amended.[7]

Mr. Ross testified that the Compact authorizes the Commission to impose an assessment on milk handlers to cover

[1] 62 FR 29626 (May 30, 1997)

[2] 62 FR 62810 (Nov. 25, 1997)

[3] 63 FR 10104 (Feb. 27, 1998); 63 FR 46385 (Sept. 1, 1998); and 63 FR 65517 (Nov. 27, 1998).

[4] 63 FR 65563 (Nov. 27, 1998).

[5] 64 FR 533 (Jan. 5, 1999).

[6] The current administrative assessment regulation is published at 7 CFR part 1308.

[7] Carmen L. Ross, Transcript (''Tr.'') at 4; Charles Arbing, Tr. at 30; Diane Bothfeld Tr. at 54 and Written Comment (''WC'') at 32; Leon J. Berthiaume, WC 13; Robert D. Wellington, WC 16; Edward W. Gallagher, WC 18; Sally J. Beach, WC 21; Michael L. Altman, WC 25; and Leon Graves, WC 34.

the costs of the administration and enforcement of the over-order price regulation. The Compact also requires the Commission to establish a reserve for the ongoing operating expenses.[8] Mr. Ross explained that the current regulation requires handlers of Class I milk products disposed of in the regulated area to pay their pro rata share of the expenses of the administration and enforcement of the over-order price regulation. The current administrative assessment is a flat rate of 3.2 cents per hundredweight and results in a variance in income of up to 13% per month.[9]

The Commission regulation is, in all material respects, the same as corresponding provisions of the Federal Order # 1 regulations.[10]

Under the Compact, like Federal Order #1, the handler is responsible for making payments of the administrative assessment. Under the Compact, like Federal Order #1, the handler is responsible for payment to the pool. Both the Compact and the Federal Order # 1 regulate handlers of fluid milk products disposed of in the regulated area, and define ''handler'' to cover operator's of pool plants, partially regulated plants, cooperative associations and others who receive and distribute fluid milk products.[11]

Mr. Ross explained that under the Federal Market Order # 1 regulation, ''the Federal Market Order (Administrator) can, when conditions warrant it, reduce or even waive the administrative assessment.'' [12] Under Federal Market Administrator Instruction #207, the United States Department of Agriculture Dairy Division recommends that budgeted operating reserves be maintained within a range of 80% to 120% of the designated reserve level. [13]

Some commenters [14] suggested that the Commission waive or reduce the administrative assessment in months in which there is no producer pool. Conversely, other commenters [15] concluded that the administrative assessment should be charged in all months, regardless of whether there is a Compact producer pool in a particular month, to ensure adequate funding of the Commission's other functions. Mr. Ross testified, that the Commission has responsibilities in addition to running the pool. In particular, he stated that it is imperative that the Compact Commission continues to monitor the Compact pool because the handlers still have to report and producers may be qualified in and out of the pool, even in months when the federal price is above the Compact minimum price and there is no Compact producer pool.[16] Accordingly, the Commission does not agree that the administrative assessment should be tied to whether there is a producer pool in a particular month.

Many commenters [17] encouraged the Commission to amend the administrative assessment regulation to allow the flexibility to adjust the assessment rate, as needed and appropriate, to meet the Commission's expenses, and to waive or reduce the assessment when the Commission operating reserves permit it. For example, Mr. Arbing testified that the Commission should waive the administrative assessment in months in which the Commission has sufficient reserves.[18] He testified that he would support a methodology that allowed the Commission discretion to waive or adjust the assessment depending on the reserves and expenses of the Commission.[19] He further testified that he would consider four months operating reserves, based on the budget approved by the Commission, to be an appropriate level for a reserve fund.[20] Other commenters also recommended that the Commission establish adequate reserves based on the Commission's budget.[21]

The Commission concludes that these commenters [22] raise valid points and, therefore, proposes to amend the method for determining the amount of the administrative assessment charged to milk handlers, without regard to whether there is a producer pool in a given month. The proposed rule would give the Commission discretion, in any given month, to waive the administrative assessment entirely, or to set the rate at an amount less than the current flat rate of 3.2 cents per hundredweight of fluid milk. The waiver or reduction would be based on the Commission's reserves and expenses. The Commission's goal is to maintain a reserve account in the range of 80% to 120% of four-months operating expenses, as determined to be necessary in the budget approved by the Commission. This range, however, would not be binding on the Commission and the Commission would at all times retain discretion whether to waive or set a lower rate for the administrative assessment. The Commission also is considering an additional amendment that would give the Commission discretion to adjust the administrative assessment upward, from the current rate of 3.2 cents, in exceptional circumstances and, if so, what exceptional circumstances would justify such an adjustment.

One commenter [23] offered several arguments related to the Commission's use of the funds generated by the administrative assessment. This commenter argues that section 18 of the Compact only permits the Commission to assess and use the administrative assessment for the direct costs of administering the producer pool, i.e. computation and announcement of the over-order price, pursuant to 7 CFR part 1305, and the computation and announcement of the producer price, pursuant to 7 CFR part 1306, and the receipt and distribution of monies from the producer-settlement fund.[24] This commenter asks the Commission to amend its regulations to conform to this narrow interpretation of the Compact.[25]

The implication of this argument is that the commenter does not view the Commission as authorized to use the administrative assessment funds for administration and enforcement of any other regulation or provision of the Compact. Some of the Commission activities authorized by these other regulations and Compact provisions include rulemaking,[26] prescribing and verifying handler's reports (which are the basis for the administration of the over-order price),[27] determining the qualification of producers,[28] classifying milk,[29] providing an exemption process for regulated persons,[30] to meet and

[8] Ross, Tr. at 5; See also, Compact Article IV, Section 10 (9) and Article VII, Section 18(a).

[9] Ross, Tr. at 5–6.

[10] Ross, Tr. at 6–8.

[11] Ross, Tr. at 6.

[12] Ross, Tr. at 8.

[13] Market Administrator Instruction #207, WC at 3–11.

[14] Arbing, Tr. at 31–32; Bothfeld, Tr. at 55; Berthiaume, WC at 14; and Graves, WC at 34.

[15] Wellington, WC at 16–17; Gallagher, WC at 20; and Beach, WC at 22.

[16] Ross, Tr. at 24–25.

[17] Arbing, Tr. at 31; Bothfeld, Tr. at 55; Berthiaume, WC at 14; Wellington, WC at 16; Gallagher, WC at 20; and Graves, WC at 34.

[18] Arbing, Tr. at 31.

[19] Arbing, Tr. at 53–54.

[20] Arbing, Tr. at 38, 40–41.

[21] Bothfeld, Tr. at 55; Berthiaume, WC at 14; Wellington, WC at 16; Gallagher, WC at 20; and Graves, WC at 34.

[22] Arbing, Tr. at 31, 38, 40–41(re: importance to processors to waive the administrative assessment when the Commission has adequate reserves); and Bothfeld, Tr. at 55, Berthiaume, WC at 14, Wellington, WC at 16, Gallagher, WC at 20, Beach, WC at 22, Graves, WC at 34 (re: in support of the Commission having the flexibility to waive or reduce the administrative assessment rate when the operating reserves permit it)

[23] Altman, WC at 26.

[24] Altman, WC at 26–30.

[25] Altman, WC at 30.

[26] 7 CFR 1300.1 and 7 CFR parts 1361 and 1371 and Compact Article V.

[27] 7 CFR 1300.1, 7 CFR Part 1303 and Compact Article VI.

[28] 7 CFR 1301.11.

[29] 7 CFR part 1304.

[30] 7 CFR part 1381, Compact Article VI, Section 16.

conduct business,[31] enforcing the Compact and over-order price regulation,[32] and conducting and administering the activities authorized by Articles I, II, IV or VII of the Compact.

The Commission respectfully disagrees with this commenter's narrow interpretation of its authority as being contrary to both the letter and the spirit of the Compact. The Compact charges the Commission with the broad mission of taking ''such steps as are necessary to assure the continued viability of dairy farming in the northeast, and to assure consumers of an adequate, local supply of pure and wholesome milk.'' Compact Article I, Section 1. In addition to the activities authorized by the Compact cited above, the Compact specifically authorizes the Commission to adopt a compact over-order price regulation, and permits that regulation to include ''an assessment for the specific purpose of their administration.'' Compact Article VII, Section 18(a). The Compact further states that any price regulation may include ''[o]ther provisions and requirements as the commission may find are necessary or appropriate to effectuate the purposes of this compact and to provide for the payment of fair and equitable minimum prices to producers.'' Compact Article IV, Section 10 (11). The Compact also requires the regulations to ''provide for establishment of a reserve for the commission's ongoing operating expenses.'' Compact, Article VII, Section 18(a). The Commission has promulgated regulations at 7 CFR Chapter XIII to effectuate its obligations and responsibilities under the Compact. The Commission is responsible for the administration and enforcement of each of the individual regulations that constitute the Northeast Dairy Compact Over-order Price Regulation, not only those selected regulations identified by the commenter.

Finally, three commenters,[33] asked the Commission to consider amending the regulations to eliminate the over-order obligation and administrative assessment on raw skim milk that is sold in bulk to other processing plants who further process and bottle that milk. The Commission considered the concerns expressed by these commenters, but declines to propose the requested amendments at this time. The Commission notes that the present Compact regulations are, in all material respects, identical to the Federal Order # 1 regulations in the treatment of the raw skim milk that is sold for further processing.

The Northeast Dairy Compact Commission has considered all the testimony and comments provided and proposes to amend the method for determining the amount of the administrative assessment charged to milk handlers. The proposed rule would give the Commission discretion, in any given month, to waive the administrative assessment entirely or to set the rate at an amount less than the current flat rate of 3.2 cents per hundredweight of fluid milk. The waiver or reduction would be based on the Commission's reserves and expenses.

Method of Payment and Charges on Overdue Accounts

The Commission also proposes to add a new regulation which would require that handlers make payment of the over-order obligation and administrative assessment to the Commission by electronic transfer of funds if the aggregate total due for the month is greater than $25,000. The Commission seeks to add this rule in order to best ensure the efficient and timely transfer of funds into the producer-settlement fund and the corresponding timely distribution of funds from the producer-settlement fund. Based on the experience of the Commission in administering the producer-settlement fund, most handlers already use electronic transfer of funds. The Commission also uses electronic transfer of funds for distribution to handlers of monies from the producer-settlement fund.

Official Notice of Technical, Scientific or Other Matters

Pursuant to the Commission regulations, 7 CFR 1361.5(g)(5), the Commission hereby gives public notice that it may take official notice, at the public hearing March 3, 1999, or afterward, of relevant facts, statistics, data, conclusions, and other information provided by or through the United States Department of Agriculture, including, but not limited to, matters reported by the National Agricultural Statistics Service, the Market Administrators, the Economic Research Service, the Agricultural Marketing Service and information, data and statistics developed and maintained by the Departments of Agriculture of the States or Commonwealth within the Compact regulated area.

The Commission will also receive into the record of this rulemaking proceeding the entire record, including the public hearing transcript and written comments and submissions, of the subjects and issues rulemaking proceeding regarding whether the amount of, or method for determining, the administrative assessment should be amended.

Public Participation in Rulemaking Proceedings

The Commission seeks and encourages oral and written testimony and comments from all interested persons regarding these proposed rules. The Commission continues to benefit from the valuable insights and active participation of all segments of the affected community including consumers, processors and producers in the development and administration of the Over-order Price Regulation.

Date, Time and Location of the Public Hearing

The Northeast Dairy Compact Commission will hold a public hearing at 9 a.m. on March 3, 1999 at the Tuck Library, Chubb Auditorium, 30 Park Street, Concord, New Hampshire.

Request for Pre-filed Testimony and Written Comments

Pursuant to the Commission rules, 7 CFR 1361.4, any person may participate in the rulemaking proceeding independent of the hearing process by submitting written comments or exhibits to the Commission. Comments and exhibits may be submitted at any time before 5 p.m. on March 17, 1999.

Please note: Comments and exhibits will be made part of the record of the rulemaking proceeding only if they identify the author's name, address and occupation, and if they include a sworn and notarized statement indicating that the comment and/or exhibit is presented based upon the author's personal knowledge and belief. Facsimile copies will be accepted up until the 5 p.m. deadline, but the original must then be sent by ordinary mail.

The Commission is requesting pre-filed testimony from any interested person. Pre-filed testimony must include the name, address and occupation of the witness and a sworn notarized statement indicating that the testimony is presented based upon the author's personal knowledge and belief. Pre-filed testimony must be received in the Commission office no later than 5 p.m. February 22, 1999 to insure distribution to Commission members prior to the public hearing.

Pre-filed testimony, comments and exhibits should be sent to: Northeast Dairy Compact Commission, 34 Barre Street, Suite 2, Montpelier, Vermont 05602 or by facsimile to (802) 229–2028.

[31] Compact Article III.

[32] Compact Article VI.

[33] Bothfeld, Tr. at 55–59; Berthiaume, WC at 14–15; and Beach, WC at 22.

List of Subjects in 7 CFR Parts 1307 and 1308

Milk.

Codification in Code of Federal Regulations

For reasons set forth in the preamble, the Northeast Dairy Compact Commission proposes to amend 7 CFR parts 1307 and 1308 as follows:

PART 1307—PAYMENTS FOR MILK

1. The authority citation for part 1307 continues to read as follows:

Authority: 7 U.S.C. 7256

§ 1307.4 [Redesignated as §1307.5]

2. Section 1307.4 is redesignated § 1307.5.

3. A new § 1307.4 is added to read as follows:

§ 1307.4 Method of payment.

If the combined total of the handler's producer-settlement fund debit for the month as determined under § 1307.2(a) and the handler's obligation for the month as determined under § 1308.1 of this chapter is greater than $25,000, then the handler must make payment to the compact commission by electronic transfer of funds on or before the 18th day after the end of the month.

PART 1308—ADMINISTRATIVE ASSESSMENT

1. The authority citation for part 1308 continues to read as follows:

Authority: 7 U.S.C. 7256.

2. Section 1308.1 is amended by revising the introductory text to read as follows:

§ 1308.1 Assessment for pricing regulations adminstration.

On or before the 18th day after the end of the month, each handler shall pay to the compact commission his pro rata share of the expense of administration of this pricing regulation. The payment shall be at the rate of 3.2 cents per hundredweight. The Commission may waive, or set the rate at an amount less than 3.2 cents, pursuant to § 1308.2. The payment shall apply to:

* * * * *

3. A new § 1308.2 is added to read as follows:

§ 1308.2 Method to waive or change the administration assessment.

The compact commission may waive or change the assessment for pricing regulation administration to maintain the operating reserve in the range of 80% to 120% of four months operating expenses, as determined in the budget approved by the commission. The compact commission will announce, pursuant to § 1305.2 of this chapter, the waiver or change in rate of assessment.

Dated: January 22, 1999.

Kenneth M. Becker,

Executive Director.

[FR Doc. 99–1993 Filed 1–27–99; 8:45 am]

BILLING CODE 1650–01–P

DEPARTMENT OF AGRICULTURE

Animal and Plant Health Inspection Service

9 CFR Parts 1 and 3

[Docket No. 98–106–1]

Animal Welfare; Petition for Rulemaking

AGENCY: Animal and Plant Health Inspection Service, USDA.

ACTION: Notice of petition and request for comments.

SUMMARY: We are notifying the public of our receipt of a petition for rulemaking, and we are soliciting public comment on that petition. The petition, sponsored by several petitioners, requests that the Secretary of Agriculture amend the definition of ''animal'' in the Animal Welfare Act regulations to remove the current exclusion of rats and mice bred for use in research and birds and grant such other relief as the Secretary deems just and proper.''

DATES: Consideration will be given only to comments received on or before March 29, 1999.

ADDRESSES: We are accepting comments in two ways—either in hard copy or via the Internet. However, comments submitted in either method must be submitted as described below; comments sent to other than the physical address or the Internet address listed below will not be considered. For comments submitted in hard copy, please send an original and three copies to Docket No. 98–106–1, Regulatory Analysis and Development, PPD, APHIS, suite 3C03, 4700 River Road Unit 118, Riverdale, MD 20737–1238. Please state that your comments refer to Docket No. 98–106–1. Anyone wishing to see copies of comments received or the petition may do so by coming to USDA, room 1141, South Building, 14th Street and Independence Avenue SW., Washington, DC, between 8 a.m. and 4:30 p.m., Monday through Friday, except holidays. Please call ahead on (202) 690–2817 to facilitate entry into the comment reading room. Any person who wishes to submit a comment electronically must use a form located on the Internet at http://comments.aphis.usda.gov. Electronically submitted comments need only be submitted once. These comments are available for public viewing at the same Internet address.

FOR FURTHER INFORMATION CONTACT: Dr. Jerry DePoyster, Senior Veterinary Medical Officer, AC, APHIS, 4700 River Road Unit 84, Riverdale, MD 20737–1228, (301) 734–7833.

SUPPLEMENTARY INFORMATION:

Background

Under the Animal Welfare Act (AWA) (7 U.S.C. 2131 *et seq.*), the Secretary of Agriculture is authorized to promulgate standards and other requirements governing the humane handling, care, treatment, and transportation of certain animals by dealers, research facilities, exhibitors, and carriers and intermediate handlers. The Secretary has delegated responsibility for administering the AWA to the Animal and Plant Health Inspection Service (APHIS) of the U.S. Department of Agriculture (USDA). Within APHIS, the responsibility for AWA administration has been delegated to Animal Care. Regulations established under the Act are contained in the Code of Federal Regulations (CFR) in 9 CFR parts 1, 2, and 3. Part 1 contains definitions for terms used in parts 2 and 3; part 2 contains general requirements for regulated parties; and part 3 contains specific requirements for the care and handling of certain animals.

The Secretary has received a petition for rulemaking sponsored by the Alternatives Research and Development Foundation; In Vitro International and Rich Ulmer, president of In Vitro International; Barbara Orlans, senior research fellow at the Kennedy Institute of Ethics at Georgetown University; George K. Russell, professor for the Department of Biology at Adelphi University; and Ruy Tchao, associate professor for the Department of Pharmacology and Toxicology at the Philadelphia College of Pharmacy and Science. The petition requests the Secretary of Agriculture to take two actions: (1) Initiate rulemaking proceedings to amend the definition of ''animal'' contained at 9 CFR 1.1 to eliminate the exclusion of birds, rats, and mice; and (2) grant such other relief as the Secretary deems just and proper.

The term ''animal'' is defined in the AWA as follows: any live or dead dog, cat, monkey (nonhuman primate mammal), guinea pig, hamster, rabbit, or such other warmblooded animal as the Secretary may determine is

being used, or is intended for use, for research, testing, experimentation, or exhibition purposes, or as a pet; but such term excludes horses not used for research purposes and other farm animals, such as, but not limited to livestock or poultry used or intended for use for improving animal nutrition, breeding, management, or production efficiency, or for improving the quality of food or fiber. With respect to a dog, the term means all dogs including those used for hunting, security, or breeding purposes.

We believe that the language ''or such other warmblooded animal as the Secretary may determine'' gives the Secretary broad power to include or exclude certain animals from AWA regulation, and we further believe that the legislative history of the AWA supports this conclusion. For example, a House Committee report on the 1970 amendments to the AWA demonstrates that Congress intended for the Secretary to have the authority to determine which warmblooded animals should be included in coverage under the Act. In promulgating the AWA regulations, the Secretary used this discretionary authority to exclude all birds and the types of rats and mice most commonly bred and used for research from coverage under the AWA. Accordingly, 9 CFR 1.1 defines ''animal'' for purposes of AWA enforcement as:

any live or dead dog, cat, nonhuman primate, guinea pig, hamster, rabbit, or any other warmblooded animal, which is being used, or is intended for use for research, teaching, testing, experimentation, or exhibition purposes, or as a pet. This term excludes: Birds, rats of the genus *Rattus* and mice of the genus *Mus* bred for use in research, and horses not used for research purposes and other farm animals, such as, but not limited to livestock or poultry, used or intended for use as food or fiber, or livestock or poultry used or intended for use for improving animal nutrition, breeding, management, or production efficiency, or for improving the quality of food or fiber. With respect to a dog, the term means all dogs, including those used for hunting, security, or breeding purposes.

Through this definition, the AWA regulations since 1972 have excluded birds and laboratory rats and mice from coverage. Congress has amended the AWA numerous times since its enactment but has never expressed any dissatisfaction with this exclusion.

The reason USDA excludes the types of rats and mice commonly bred and used for research and birds from coverage under the AWA regulations is for purposes of effective resource management and because we believe that the majority of these animals are already being afforded certain protections. AWA enforcement resources are determined annually by congressional appropriation. In administering the AWA, Animal Care constantly strives to use this finite amount of resources as prudently as possible to meet congressional intent under the law. APHIS enforces the AWA by inspecting the premises of regulated facilities and taking regulatory action against persons found to be in violation of the AWA regulations. In fiscal year 1997, a staff of about 73 Animal Care inspectors conducted almost 16,000 inspections to ensure compliance with the AWA regulations. Our goal is to provide effective protection for as many animals covered by the AWA as we can.

For the last 7 years, the appropriation for AWA enforcement has been basically constant at about $9.2 million; we anticipate that this appropriation will remain at the current level in the coming years. However, because of inflation, the purchasing power of the AWA enforcement budget decreases from year to year. Level funding has necessitated the elimination of the financial equivalent of three to five Animal Care positions per year. Additional information about the Animal Care programs staffing and accomplishments may be obtained from the Animal Care home page on the Internet at http://www.aphis.usda.gov/ac/, by reviewing the Animal Care Annual Report to Congress, or by calling (301) 734–7799.

We believe that the cost of extending AWA enforcement to all entities and facilities that handle rats of the genus *Rattus*, mice of the genus *Mus*, and birds for purposes covered by the AWA would be substantial. We want the public to know that we believe that extending AWA coverage to laboratory rats, laboratory mice, and birds would significantly affect overall AWA enforcement, as discussed below.

We also want the public to know that we believe that extending AWA coverage to laboratory rats, laboratory mice, and birds would have a substantial financial impact on the affected entities and that the vast majority of rats, mice, and birds being used in biomedical research are already being afforded certain protections. USDA and the Public Health Service (PHS) of the U.S. Department of Health and Human Services estimate that at least 90 percent of the rats, mice, and birds being used for research in the United States are provided oversight by PHS assurance, voluntary accreditation, or both. Most biomedical research in the United States is performed in laboratories funded at least in part by PHS. The PHS Policy on Humane Care and Use of Laboratory Animals covers rats, mice, and birds, in addition to all other live, vertebrate animals that are involved in activities supported by PHS. The PHS Policy requires an Animal Welfare Assurance, which commits the research institution to a program of animal care and use that is consistent with the *Guide for the Care and Use of Laboratory Animals*, a publication produced by the National Research Council to assist institutions in caring for and using animals in ways judged to be scientifically, technically, and humanely appropriate. The animal care standards listed in the *Guide* are at least consistent with and in many cases exceed the standards specified in the AWA regulations.

In addition to PHS oversight, many U.S. research facilities are accredited by the Association for Assessment and Accreditation of Laboratory Animal Care International (AAALAC). This private organization, through inspections and reviews, accredits laboratories that meet or exceed the animal care standards specified in the *Guide*. Research facilities seek AAALAC accreditation for assistance with public relations and in receiving grants. AAALAC currently accredits approximately 600 U.S. research facilities, and approximately 40 percent of USDA-regulated research facilities are AAALAC accredited.

We have seriously considered the issue of bringing laboratory rats, laboratory mice, and birds under AWA regulation. As a regulatory agency, we are required to consider the effects of the regulations we promulgate and enforce on affected entities. Extending AWA coverage to facilities that use birds, laboratory rats, or laboratory mice would affect numerous entities, including many small businesses. As stated above, many of these entities currently meet PHS and AAALAC requirements. If these entities come under APHIS regulation, they might not incur costs associated with coming into compliance with the AWA requirements. However, these entities would incur costs pertaining to licensing or registration, and we do not necessarily believe that these new expenses would translate into a higher standard of protection for the animals, which are already being maintained in conditions that meet or exceed the AWA requirements.

The AWA requires USDA to perform at least one inspection of each regulated research facility every year. U.S. research facilities use vast numbers of rats and mice in research and testing, and many research facilities use these species exclusively. In 1990, APHIS conducted a study of the potential effects of extending AWA protection to

laboratory rats, laboratory mice, and birds. The estimated annual cost for conducting inspections of the additional research facilities that would come under AWA regulation was at least $3.5 million (in 1990 dollars), or roughly one-third of the current Animal Care budget. This estimate represents only the minimum additional annual funding that would have been needed by APHIS to inspect research facilities that use birds, rats, and mice; it does not include the additional funding that would have been needed to conduct inspections of breeders, dealers, carriers, and intermediate handlers of birds, rats, and mice. Also excluded from this estimate are first-year implementation expenditures (for training, automobile purchases, etc.) and additional annual enforcement costs.

The following facts were derived from the 1990 study and an informal survey of Animal Care managers in 1998:

- The number of regulated research facilities in the United States in 1990 was 2,410. If rats and mice bred for use in research had been brought under AWA regulation that year, an estimated additional 2,324 research sites would have required inspection. Therefore, extending AWA protection to laboratory rats and mice alone would have doubled the number of regulated research facilities.
- Regulating the research facilities, breeders, dealers, and exhibitors that handled birds in 1990 would have added an estimated 2,302 facilities to the Animal Care inspection workload.
- To maintain the level of AWA inspections conducted in 1990 and conduct inspections of facilities that deal with rats, mice, and birds, Animal Care would have needed to hire an estimated additional 34 veterinarians and 16 animal health technicians.

As stated previously, past appropriations have necessitated reductions in Animal Care staffing. Therefore, a staffing increase of the magnitude projected in 1990 would be an impossibility within the current and anticipated Animal Care budget. However, we recognize that the estimates made in the 1990 study are dated at this point, and we would appreciate more current data. Commenters are encouraged to provide information on the numbers of facilities that would come under AWA regulation today if USDA were to regulate the care provided to rats and mice bred for use in research and birds.

Despite the resource issues, we have examined many possible courses of action to bring laboratory rats, laboratory mice, and birds under AWA protection. Four options and the known and anticipated drawbacks of each are discussed below:

1. Regulate the care provided to all rats, mice, and birds being used for purposes covered by the AWA at all facilities, including those not currently being regulated by USDA.

- For APHIS: This option would greatly increase the Animal Care inspection workload and, therefore, would cause inspection activities for all currently regulated facilities-especially breeders, dealers, carriers, and zoos and circuses-to be dramatically curtailed.
- In addition, developing regulatory standards for the care of birds would be difficult, time-consuming, and expensive because the housing and husbandry needs of avian species vary greatly. All Animal Care inspectors would need additional training in the veterinary and husbandry care needs of birds.
- For the regulated industry: Entities not currently regulated by APHIS would need to absorb costs associated with AWA regulation.

2. Regulate the care provided to all rats, mice, and birds at research facilities only.

- This option would increase the number of research sites for Animal Care to inspect and, therefore, would seriously compromise inspection activities for other currently regulated facilities, such as breeders, dealers, carriers, and exhibitors.
- As with option 1, entities not currently subject to regulation by APHIS would become subject to such regulation, and the additional costs to these entities would not necessarily result in greater protection for the animals.

3. Regulate the care provided to all rats and mice at research facilities only.

- Again, this option would increase the number of facilities Animal Care inspects. However, the number would be less than the numbers that would result from the adoption of options 1 or 2. This increase in regulated facilities would also result in reduced inspection activities for currently regulated facilities.
- As with options 1 and 2, research facilities not currently subject to regulation by APHIS would become subject to such regulation.

4. Maintain the status quo. Do not initiate regulation of facilities dealing with rats of the genus *Rattus*, mice of the genus *Mus*, and birds.

- Current AWA inspection activities would not be adversely affected, and no additional entities would need to bear the costs of APHIS regulation.

In addition, we are exploring the possibility of obtaining partial funding for AWA enforcement through user fee authority. USDA is considering seeking the statutory authority to charge fees for the services required to issue and renew licenses and registrations for conducting AWA-regulated activities. Our goal is to recover approximately 30 to 40 percent of our current operating expenses through user fees. However, even if such authority is granted, the amount collected would likely offset a reduction from the current appropriation and would not enable Animal Care to extend effective enforcement services to all facilities that use birds and laboratory rats and mice. In that context, we are seeking public comment on whether it would be appropriate to seek authority to charge user fees for costs associated with any services pertaining to the regulation of the care provided to laboratory rats, laboratory mice, or birds. Because these would be new, rather than existing, services, they could be funded by user fees, with no additional cost to the Federal Government.

In summary, we believe that extending AWA protection to rats and mice bred for use in research and birds with current AWA enforcement resources would have serious consequences for the protection of other species covered by the AWA regulations. To conduct annual inspections of research facilities that use rats, mice, and birds, we would need to reduce by approximately one-third the number of inspections in other areas, such as breeders and dealers of dogs and cats, commercial carriers, large and small zoos, and circuses. We believe that such a reduction in inspection services would greatly compromise our efforts to ensure AWA compliance of all currently regulated facilities and adequate protection to all currently covered species.

The petition is reprinted below. We invite comments on the proposed changes discussed in the petition. In particular, we are soliciting comments addressing the questions listed below before the petition. While we are providing this list of questions for the convenience of persons who wish to submit comments, we will accept written comments in any format or via the electronic form mentioned previously in **ADDRESSES**.

Authority: 7 U.S.C. 2131–2159; 7 CFR 2.22, 2.80, and 371.2(g).

Done in Washington, DC, this 21st day of January 1999.

Craig A. Reed,

Administrator, Animal and Plant Health Inspection Service.

BILLING CODE 3410–34–P

Comments on the Petition for Rulemaking to the Secretary of Agriculture
Regarding the Exclusion of
Rats of the Genus Rattus, Mice of the Genus Mus, and Birds
From the Definition of "Animal" in the Animal Welfare Act Regulations

Question 1: Should the definition of "animal" in 9 CFR part 1 be revised to include laboratory rats, laboratory mice, and birds, or any of the three?

Comment:

Question 2: If the definition of "animal" in 9 CFR part 1 is amended to include laboratory rats, laboratory mice, and birds, should Animal Care regulate the care provided to these species in all circumstances covered by the AWA or in certain circumstances, such as use in research, only?

Comment:

Question 3: The AWA requires that USDA inspect all research facilities at least once a year. Because of current and anticipated resources for AWA enforcement, any coverage of rats, mice, or birds would result in significantly reduced numbers of inspections for other AWA-regulated entities, such as dog and cat dealers, intermediate handlers and carriers, large and small zoos, and circuses. Should AWA enforcement activities be equal for all species covered by the AWA? If not, what should be the relative priorities?

Comment:

Question 4: If the definition of "animal" in 9 CFR part 1 is amended to include laboratory rats, laboratory mice, and birds, how many additional facilities would come under USDA regulation?

Comment:

Question 5: Other comments?

BILLING CODE 3410–34–C

Petition for Rulemaking To Amend the USDA Regulation Excluding Birds, Rats, and Mice From Coverage Under the Animal Welfare Act

Alternatives Research and Development Foundation, 801 Old York Road, Jenkintown, PA 19046, *and* Rich Ulmer, President, In Vitro International, 16632 Milikan Avenue, Irvine, CA 92606, *et al.* v. Daniel Glickman, Secretary of Agriculture, U.S. Department of Agriculture, 1400 Independence Ave, S.W., Room 200A, Whitten Building, Washington, DC 20250.

I. Introduction

Pursuant to the Right to Petition Government Clause contained in the First Amendment of the United States Constitution,[1] the Administrative Procedure Act,[2] and the United States Department of Agriculture (''USDA'') implementing regulations,[3] petitioners file this petition with the USDA and respectfully request the Secretary to undertake the following actions:

(1) Initiate rulemaking proceedings to amend the definition of ''animal'' contained at 9 CFR 1.1 to eliminate the exclusion of birds, rats and mice; and

(2) Grant such other relief as the Secretary deems just and proper.

USDA's regulation excluding ''[b]irds, rats of the genus *Rattus*, and mice of the genus *Mus* bred for use in research'' (hereinafter referred to as ''birds, rats, and mice'') is arbitrary and capricious, an abuse of agency discretion and otherwise not in accordance with law. Petitioners request that a new rulemaking procedure be initiated that is consistent with the Animal Welfare Act (''AWA'') by regulating birds, rats, and mice.

I. Petitioners

The AWA, 7 U.S.C. 2131 *et seq.*, is the only federal law regulating the use of animals in research, testing, and education. The 1985 Amendments, 7 U.S.C. note, to the AWA were passed, in part, because Congress found that,

(2) methods of testing that do not use animals are being and continue to be developed which are faster, less expensive, and more accurate than traditional animal experiments for some purposes and further opportunities exist for the development of these methods of testing;

(3) measures which eliminate or minimize the unnecessary duplication of experiments on animals can result in more productive use of Federal funds.

Explicit provisions of the AWA require research facilities to undertake steps in the direction of using alternatives to animals when an animal experiment causes pain or distress.[4] These requirements must be met whenever ''animals'' are used. Thus, in order to further the Congressional goals of developing methods of testing which do not use animals and developing measures which eliminate or minimize duplication of experiments on animals, the regulatory definition of ''animal'' is of critical importance. Simply put, if an animal is defined as not being an animal by regulation, there is no statutory or regulatory requirement, that alternatives, i.e., non-animal models, be considered or used instead of that animal. Because USDA has defined birds, rats, and mice as non-animals, there is no statutory or regulatory requirement that anyone consider alternatives to the use of these creatures.

This ''Petition for Rulemaking to Amend the USDA Regulation Excluding Birds, Rats, and Mice from Coverage Under the Animal Welfare Act'' is filed on behalf of the following petitioners:

Petitioner Alternatives Research and Development Foundation (''ARDF'') is located at 801 Old York Road, Jenkintown, PA 19046. ARDF is a four year old nonprofit organization that is affiliated with the American Anti-Vivisection Society (''AAVS''). ARDF supports the development and promotes the use of non-animal methods in research, testing, and education. ARDF has funded numerous in vitro, non-animal methods, projects to promote the development and use of in vitro methods. Some of the projects ARDF has funded include, a computer graphic animations for interactive videodisc alternatives to live animal teaching, the development of an in vitro alternative to replace the isolate tissue bath assay, and the development of a simple, inexpensive alternative to replace mice for small, medium, and large scale monoclonal antibody production. ARDF also gives the annual Cave Award to distinguished people who have developed and promoted the use of alternative methods.

Not only does ARDF sponsor alternative research, but it also works to educate researchers about the use of in vitro methods. In September 1997, the Johns Hopkins University and The Office for Protection from Research Risks of the National Institutes of Health (''NIH'') hosted a workshop on the ''Alternatives in Monoclonal Antibody Production.'' This workshop resulted from ARDF's petition to NIH concerning the ASCITES method, a painful form of animal research. ARDF also participated in several workshops sponsored by the organization, Public Responsibility in Medicine and Research ''PRIM&R'' in March 1998 on ''In Vitro and In Vivo Production of Polyclonal and Monoclonal Antibodies.'' Petitioner is also organizing workshops for the Third World Congress on Alternatives and Animal Use in the Life Sciences. ARDF's programs work to promote the development and use of alternative methods, however, these programs are frustrated and impeded by USDA's illegal definition. USDA has illegally defined ''animal'' by excluding birds, rats, and mice. Consequently, there is no statutory requirement for researchers to consider alternatives when experimenting on birds, rats, and mice.

Petitioner Rich Ulmer is the President of In Vitro International located at 16632 Milikan Avenue, Irvine, CA 92606. Petitioner heads a science-based, publicly traded company that develops, manufacturers, and markets laboratory tests to replace animal testing. Agents represent the company in the United States and around the world. Petitioner represents one of only three in vitro companies in the world. In Vitro International, also a petitioner, was established to protect the well-being of laboratory animals by promoting the development and use of alternative methods. In Vitro International is marketing a technology that is intended to minimize animal pain and distress by promoting ocular and dermal irritation alternatives for testing the misuse of products such as cosmetics, shampoos, deodorants, and car wash fluids. Because USDA definition of ''animal'' excludes birds, rats, and mice from AWA protection, researchers have no requirement to consider alternative methods before testing, researching, or experimenting on these ''non-animals.'' This exclusion affects the company's ability to successfully market non-animal methods because researchers have no incentive under the AWA to

[1] ''Congress shall make no law * * * abridging * * * the right of the people * * * to petition Government for a redress of grievances.'' U.S. Const., amend. I. The right to petition for redress of grievances is among the most precious of the liberties safeguarded by the Bill of Rights. *United Mine Workers of America, Dist. 12* v. *Illinois State Bar Ass'n*, 389 U.S. 217, 222, 88 S. Ct. 353, 356 (1967). It shares the ''preferred place'' accorded in our system of government to the First Amendment freedoms, and has a sanctity and a sanction not permitting dubious intrusions. *Thomas* v. *Collins*, 323 U.S. 516, 530, 65 S. Ct. 315, 322 (1945). ''Any attempt to restrict those First Amendment liberties must be justified by clear public interest, threatened not doubtful or remotely, but by clear and present danger.'' *Id.* The Supreme Court has recognized that the right to petition is logically implicit in, and fundamental to, the very idea of a republican form of government. *United States* v. *Cruikshank*, 92 U.S. (2 Otto) 542, 552, 23 L. Ed. 588 (1875).

[2] 5 U.S.C. 553(e) (1994).

[3] 7 CFR Subtitle A § 1.28 (1997).

[4] 7 U.S.C. 2143(a)(3) and 7 U.S.C. 2143(b)(3).

consider alternative methods for the excluded animals. As a result, the company has a limited number of consumers interested in using in vitro methods. This is a significant impediment for the growth of the company because birds, rats, and mice encompass the majority of laboratory animals used in research. Petitioners' interest in preventing inhumane treatment of these animals is impeded by USDA's failure to require researchers to consider alternatives before using birds, rats, and mice.

Petitioner Barbara Orlans resides at 7106 Laverock Lane, Bethesda, MD 20817. Petitioner is a Senior Research Fellow at the Kennedy Institute of Ethics at Georgetown University. She received a Bachelor of Science degree in Physiology and a Masters in Science and a Ph.D. degree in Physiology. Petitioner is the author of the books *Animal Care: From Protozoa to Small Mammals, In the Name of Science: Issues in Responsible Animal Experimentation,* and the co-author of *The Human Use of Animals: Case Studies in Ethical Choice.* She has also written numerous articles on animals published in peer-reviewed scientific journals including, ''Animal Pain Scales in Public Policy'', ''Regulation and Ethics of Animal Experiments: An International Comparison'', and ''Ethical Decision-Making About Animal Experiments.'' Petitioner teaches a course on ethical issues of animal research at Georgetown University because of her interest in the humane treatment of animals. She was also founding president of the Scientists Center for Animal Welfare, a non-profit organization dedicated to educating scientists about animal issues including the ''three R's,'' reduction, refinement, and replacement of animal testing methods. For over thirty years, Orlans has worked to protect the well-being of laboratory animals. USDA's failure to regulate the use of birds, rats, and mice provides a disincentive for researchers to use alternatives and thus, harms and impedes petitioners ability to educate and encourage researchers and students to use non-animal alternatives.

Petitioner George K. Russell is a professor for the Department of Biology at Adelphi University, Garden City, NY 11530. He has an A.B. and a Ph.D. in biology. Petitioner is one of the first to develop a non-animal approach to teaching undergraduate biology courses. He is also editor of *Orion: People and Nature.* The publication is dedicated to a deeper understanding of human relationships to the environment. For the past twenty-five years, petitioner has been dedicated to protecting the well-being of laboratory animals. He has written several articles urging teachers to avoid experiments that cause harm to animals. Due to USDA's wrongful exclusion of birds, rats, and mice from AWA protection, universities are not required under the AWA to consider the availability of alternatives or the treatment of these ''non-animals'' when used in animal testing. As a result, students are not educated about the humane treatment of animals or the use and availability of alternative methods.

Petitioner Ruy Tchao resides at 404 Cedar Lane, Flourtown, PA 19031. He has a Bachelor of Science degree in Chemistry and a Ph.D. in Biochemistry. He is an Associate Professor at the Philadelphia College of Pharmacy and Science in the Department of Pharmacology and Toxicology. He has written several articles on the research and development of in vitro methods and the use of these methods as a viable alternative to animal testing. He has worked with in vitro methods for seventeen years because he believes that this type of research can provide more relevant data than the data derived from animals. The AWA requires research facilities to consider alternatives when experimentation on an animal may cause pain or distress. However, USDA has defined birds, rats, and mice as non-animals and as a result, research facilities are not required to consider alternatives for these creatures. Thus, petitioner's promotion of the valuable data obtained from in vitro methods is frustrated and impeded by USDA's definition of ''animal.''

II. Statement of Facts

In 1966, Congress enacted the Federal Laboratory Animal Welfare Act to address the abuses that develop as a result of experimenting with animals.[5] This Act is the only federal statute designed to protect animals used in all research facilities.

The 1970 amendments enacted a broad definition of animal which covers ''warm-blooded animals, as the Secretary may determine is being used, or is intended for use, for research, testing, experimentation or exhibition purposes.''[6] This language has remained throughout both the 1976 and 1985 amendments. Despite this broad statutory definition, the USDA has excluded birds, rats, and mice from its regulation defining ''animal.''[7] As a result of this exclusion, the majority of all animals used in research are not protected by the AWA.[8]

Under the AWA, research facilities must meet requirements for animal care and treatment in order to minimize animal pain and distress.[9] Investigators must also consider alternatives to any procedure that is likely to produce pain or distress in animals used for research.[10] Contrary to Congressional intent, USDA's animal welfare regulations do not affect the vast majority of research facilities because USDA has excluded the majority of laboratory animals from AWA protection. Consequently, researchers may research, test, and experiment on birds, rats, and mice without considering the use of any non-animal alternative methods.

On April 23, 1997, AAVS petitioned USDA requesting the agency to amend its animal welfare regulations. USDA denied the petition by claiming that it does not have the resources to regulate these animals at this time.[11] This response is similar to the reply received by the Humane Society of the United States (''HSUS'') and the Animal Legal Defense Fund's (''ALDF'') petition requesting USDA to amend its definition of ''animal.'' A United States District Court examined the validity of USDA's denial of this petition in *Animal Legal Defense Fund v. Madigan.*[12] The court held that USDA's denial of ALDF's rulemaking petition was arbitrary and capricious because USDA focused on availability of resources and personnel rather than whether these animals are used for purposes that allow them to receive AWA protection.[13] The court also addressed whether USDA has the discretion to exclude birds, rats, and mice from AWA coverage. The court held that USDA's exclusion of these

[5] Pub.L. 89–544, 80 Stat. 359 (1966).

[6] 7 U.S.C. 2132(g) (1994).

[7] 9 C.F.R. 1.1.

[8] U.S. Congress, Office of Technology Assessment, *Alternatives to Animal Use in Research, Testing, and Education* 5 (Washington, D.C., 1986) (reporting that ''the best data source available—the USDA/APHIS census—suggests that at least 17 million to 22 million animals were used in research and testing in the United States in 1983. The majority of animals used—between 12 million and 15 million—were rats and mice.''). *Also see* USDA's August 6, 1997 response to AAVS' petition (explaining that in 1990 USDA analyzed the impact of covering mice, rats, and birds and concluded that it would represent ''a 96 percent increase in the number of animal research sites under USDA inspection authority'') [hereinafter ''USDA response''].

[9] 7 U.S.C. 2143(a)(3)(A).

[10] *Id.* sec. 2143(a)(3)(B).

[11] USDA response.

[12] *Animal Legal Defense Fund v. Madigan,* 781 F. Supp.797(D.D.C. 1992), *vacated sub nom. Animal Legal Defense Fund v. Espy,* 23 F.3d 496 (D.C. Cir. 1994) (decision vacated because the court held that plaintiffs lacked standing to sue).

[13] *Madigan,* 781 F. Supp. at 805–806.

animals is arbitrary and capricious and violates the AWA.[14]

Despite the holding in *Madigan*, USDA continues to exclude birds, rats, and mice. Petitioners file this petition because USDA's regulation defining ''animal'' fails to require the use and development of non-animal laboratory research alternatives for the majority of animals used in research, testing, and experimentation. Petitioners are working to further the AWA's purpose by developing and using alternative non-animal methods but are impeded due to USDA's definition of ''animal.'' As long as USDA excludes birds, rats, and mice, all parts of the AWA and the regulations which mandate consideration about the use of alternative methods and the minimization or elimination of painful procedures on animals *bypass* birds, rats, and mice.

Once USDA promulgates rules that are consistent with the AWA by regulating birds, rats, and mice, then the new regulatory protection afforded the majority of laboratory animals will require researchers to minimize animal distress and pain by considering alternative methods. As a result, researchers will have an incentive to use in vitro methods. Thus, in vitro marketers, users, and advocators, including petitioners, will have an opportunity to promote and encourage the use of non-animal methods.

III. Statement of the Law

A. AWA Policies and Congressional Findings

1. Congressional Statement of Policy

The Congress finds that animals and activities which are regulated under this Act (citation omitted) are either in interstate or foreign commerce or substantially affect such commerce or the free flow thereof, and that regulation of animals and activities as provided in this Act (citation omitted) is necessary to prevent and eliminate burdens upon such commerce and to effectively regulate such commerce, in order—

(1) To *insure that animals intended for use in research facilities* or for exhibition purposes or for use as pets are provided humane care and treatment;

(2) To assure the humane treatment of animals during transportation in commerce; and

(3) To protect the owners of animals from the theft of their animals by preventing the sale or use of animals which have been stolen.

The Congress further finds that it is essential to regulate, as provided in this Act (citation omitted), the transportation, purchase, sale, housing, care, handling, and treatment of animals by carriers or by persons or organizations engaged in using them for *research or experimental purposes* or for exhibition purposes or holding them for sale as pets or for any such purpose or use.[15]

2. Congressional Findings for 1985 Amendment

(1) The use of animals is instrumental in certain research and education for advancing knowledge of cures and treatment for diseases and injuries which afflict both humans and animals;

(2) *Methods of testing that do not use animals are being and continue to be developed which are faster, less expensive, and more accurate than traditional animal experiments for some purposes and further opportunities exist for the development of these methods of testing*;

(3) *Measures which eliminate or minimize the unnecessary duplication of experiments on animals* can result in more productive use of Federal funds; and

(4) Measures which help meet the public concern for laboratory animal care and treatment are important in assuring that research will continue to progress.[16]

B. Definitions of ''Animal'' Under AWA and USDA Regulations

1. Animal Welfare Act

The term ''animal'' means any live or dead dog, cats, monkey (nonhuman primate mammal), guinea pig, hamster, rabbit, or such other warm-blooded animal, as the Secretary may determine is being used, or is intended for use, for research, testing, experimentation, or exhibition purposes, or as a pet; but such term excludes horses not used for research purposes and other farm animals, such as, but not limited to livestock or poultry used or intended for use for improving animal nutrition, breeding, management, or production efficiency, or for improving the quality of food or fiber. With respect to a dog, the term means all dogs including those used for hunting, security, or breeding purposes;[17]

2. USDA Regulations

Animal means any live or dead dog, cat, nonhuman primate, guinea pig, hamster, rabbit, or any other warm-blooded animal, which is being used, or is intended for use for research, teaching, testing, experimentation, or exhibition purposes, or as a pet. This term excludes: Birds, rats of the genus *Rattus* and mice of the genus *Mus* bred for use in research, and horses not used for research purposes and other farm animals, such as, but not limited to livestock or poultry, sed or intended for use as food or fiber, or livestock or poultry used or intended for use for improving animal nutrition, breeding, management, or production efficiency, or for improving the quality of food or fiber. With respect to a dog, the term means all dogs, including those used for hunting, security, or breeding purposes.[18]

C. AWA Standards and Certification Process for Humane Handling, Care, Treatment and Transportation of Animals

(a)(1) The Secretary shall promulgate standards to govern the humane handling, care, treatment, and transportation of animals by dealers, research facilities, and exhibitors.

(3) In addition to the requirements under paragraph (2), the standards described in paragraph (1) shall, with respect to animals in research facilities, include requirements—

(A) For animal care, treatment, and practices in experimental *procedures to ensure that animal pain and distress are minimized*, including adequate veterinary care and the appropriate use of anesthetic, analgesic, tranquilizing drugs, or euthanasia;

(B) *That the principal investigator considers alternatives to any procedure likely to produce pain to or distress in an experimental animal.*

(6)(A) Nothing in this Act (citation omitted)—

(I) Except as provided in paragraphs (7) of this subsection, shall be construed as authorizing the Secretary to promulgate rules, regulations, or orders with regard to the design, outlines, or guidelines of actual research or experimentation by a research facility as determined by such research facility;

(ii) Except as provided subparagraphs (A) and (C) (ii) through (v) of paragraph (3) and paragraph (7) of this subsection, shall be construed as authorizing the Secretary to promulgate rules, regulations, or orders with regard to the performance of actual research or experimentation by a research facility as determined by such research facility;

(7)(A) The Secretary shall require each research facility to show upon inspection, and to report at least

[14] *Id.* at 806.

[15] 7 U.S.C. 2131 (emphasis added).

[16] *Id.* sec. 2131 note (emphasis added).

[17] *Id.* sec 2132(g).

[18] 9 CFR 1.1 (1997) (emphasis added).

annually, that the provisions of this Act (citation omitted) are being followed and that professionally acceptable standards governing the care, treatment, and use of animal are being followed by the research facility during actual research or experimentation.

(B) In complying with subparagraph (A), such research facilities shall provide—

(I) Information on procedures likely to produce pain or distress in any animal and assurances demonstrating that the *principal investigator considered alternatives to those procedures*;

(ii) Assurances satisfactory to the Secretary that such facility is adhering to the standards described in this section * * *.

(d) Each research facility shall provide for the training of scientists, animal technicians, and other personnel involved with animal care and treatment in such facility as required by the Secretary. Such training shall include instruction on—

(1) The humane practice of animal maintenance and experimentation;

(2) Research or testing methods that *minimize or eliminate the use of animals* or limit animal pain or distress * * *.

(e) The Secretary shall establish an information service at the National Agricultural Library. Such service shall, in cooperation with the National Library of Medicine, provide information—

(2) Which could prevent unintended duplication of animal experimentation as determined by the needs of the research facility; and

(3) On improved methods of animal experimentation, including methods which could

(A) *Reduce or replace animal use*; and

(B) Minimize pain and distress to animals, such as anesthetic and analgesic procedures.

(f) In any case in which a Federal agency funding a research project determines that conditions of animal care, treatment, or practice in a particular project have not been in compliance with standards promulgated under this Act (citation omitted), despite notification by the Secretary or such Federal agency to the research facility and an opportunity for correction, such agency shall suspend or revoke Federal support for the project * * *[19]

[19] 7 U.S.C. 2143 (emphasis added).

IV. Consistent With Congressional Intent Under the Animal Welfare Act, USDA Should Initiate Rulemaking Proceedings To Redefine ''Animal'' To Include Birds, Rats, and Mice

Congress enacted the Animal Welfare Act (''AWA'') and subsequent amendments to protect animals used in research.[20] In order to further congressional intent, petitioners request that USDA promulgate regulations that are consistent with the AWA's definition of ''animal.'' The AWA states that:

> The term ''animal'' means any live or dead dog, cat, monkey (nonhuman primate mammal), guinea pig, hamster, rabbit, or such other warm-blooded animal, as the Secretary may determine is being used, or is intended for use, for research, testing, experimentation, or exhibition purposes or as a pet; but such term excludes horses not used for research purposes and other farm animals, such as but not limited to livestock or poultry, used or intended for use as food or fiber, or livestock or poultry used or intended for improving animal nutrition, breeding, management or production efficiency, or for improving the quality of food or fiber. With respect to a dog the term means all dogs including those used for hunting, security, or breeding purposes.[21]

Under the AWA, USDA must provide protection to all warm-blooded animals used in research. Instead of complying with this mandate, USDA's regulation excludes birds, rats, and mice from AWA protection despite the fact that these animals encompass the majority of animals used in laboratory research. USDA's exclusion of these animals is arbitrary and capricious and not in accordance with law based upon the Supreme Court's holding in *Chevron U.S.A., Inc. v. Natural Resources Defense Council, Inc.*[22] The holding in *Chevron* directs a court to apply a two-part test when reviewing an agency's construction of a statute. First, the court is to look at the plain meaning of the statute.[23] If the statute is unambiguous, then the court and the agency must give effect to Congress' intent.[24] Only if a statute is silent or ambiguous must the court then move to the second step under *Chevron* which requires the court to look at whether the agencies interpretation of the statute is reasonable.[25]

[20] *Id.* §§ 2131–2157.

[21] *Id.* sec. 2132(g).

[22] 467 U.S. 837 (1984)

[23] *Id.* at 842–3.

[24] *Id.*

[25] *Id.* at 843.

A. The First Step of the Chevron Analysis Shows That the Purpose and Plain Meaning of the Animal Welfare Act Does Not Support the USDA's Definition of ''Animal''

When promulgating a regulation, an agency must first determine whether Congress has directly addressed the subject matter at issue. Under *Chevron*, an agency must make this decision by determining the plain meaning of the statute. Ordinarily, the words of a statute must be interpreted in light of the purpose that Congress intended to serve. In this case, Congress specifically passed the AWA to provide for the humane care and treatment of animals used in research, for exhibition, and as pets.[26]

USDA's exclusion of birds, rats, and mice from AWA protection directly contravenes the AWA's statutory purpose of assuring the humane treatment of laboratory animals. The effect of USDA's regulation is that the regulated industry will never be in violation of the AWA regardless of how it treats birds, rats, and mice. For example, under the AWA, research facilities can deny these animals food, water, appropriate housing and can also inflict excruciating pain without providing an analgesic. In this case, not only does the exclusion of these animals have no relevance to any of the stated purposes of the Act, but the *inclusion* of these animals would insure that animals used in research facilities are provided humane care and treatment as the AWA requires.

Furthermore, the Congressional findings for the 1985 amendments state that ''methods of testing that do not use animals are being and continue to be developed which are faster, less expensive, and more accurate than traditional animal experiments for some purposes and further opportunities exist for the development of these methods of testing.''[27] Due to USDA's failure to provide birds, rats, and mice AWA protection, the use of alternative methods for these species is rarely, if ever, undertaken. In fact, in USDA's response to the AAVS petition, the agency stated that regulating birds, rats, and mice would constitute a ninety-six percent increase in regulated research facilities. USDA's own figure indicates that the majority of researchers are choosing to use birds, rats, or mice instead of alternatives. By using these animals, facilities can escape inspection and bypass the Act's requirement that they consider alternatives. Because

[26] 7 U.S.C. 2131.

[27] *Id.* sec. 2131 note (emphasis added).

USDA has exempted these animals from the definition of ''animal'', there is no incentive for the use or advancement of alternative methods for the majority of animals used in research. This practice is contrary to the AWA's purpose of advancing alternatives. Therefore, in light of the general tenet ''to favor interpretation which would render statutory design effective in terms of policies behind its enactment and to avoid interpretation which would make such policies more difficult of fulfillment,'' [28] the AWA's purpose supports the definition of birds, rats, and mice as animals and their regulation in research.

The plain meaning of the AWA also shows that USDA's regulation defining ''animal'' is inconsistent with the statute. The AWA indicates that if an animal is warm-blooded and used for research, testing, or experimentation, then the animal is an ''animal'' for AWA purposes. Furthermore, Congress has explicitly stated which limited subset of animals the Secretary is authorized to exclude by stating:

> Such term (animal) excludes horses not used for research purposes and other farm animals, such as, but not limited to livestock or poultry, used or intended for use as food or fiber, or livestock or poultry used or intended for improving animal nutrition, breeding, management or production efficiency, or for improving the quality of food or fiber. With respect to a dog the term means all dogs including those used for hunting, security, or breeding purposes.[29]

Although, birds, rats, and mice are not included in this list of excluded animals, the Secretary has arbitrarily decided to exclude them from the protections of this Act.

A Congressional report issued in 1986 provides further evidence that USDA's regulation contradicts the AWA's plain meaning. The Office of Technology Assessment (''OTA'') conducted a study to analyze the scientific, regulatory, economic, legal, and ethical considerations involved in alternative technologies in biomedical and behavioral research, toxicity testing, and education.[30] The report lays out numerous policy issues and options for Congressional action and reiterates the AWA's inconsistency with USDA's regulation. The OTA report concludes that the exclusion of mice and rats from the protections of the AWA is inconsistent with the language of the Act and ''appears to frustrate the policy Congress sought to implement in 1970 and consequently to be beyond the Secretarys authority.'' [31]

In support of its exclusion of birds, rats, and mice, the USDA argues in its response to the AAVS petition that the AWA ''gives the Secretary of Agriculture broad discretionary authority to exclude rats of the genus Rattus, mice of the genus Mus, and birds.'' [32] This argument, however, is in direct contrast to USDA's prior position where it stated that it had no discretion to exclude warm-blooded animals used in research. The agency previously explained:

> * * * Gerbils became a regulated species when the 1970 amendments to the Act expanded the definition of ''animal'' to include ''such other warm-blooded animal, as the Secretary may determine is being used, or is intended for use for research, testing * * *.'' We do not have the authority to remove these animals from the coverage of the regulations.[33]

USDA admits in the gerbil example that it has no discretionary authority to deny protection to warm-blooded animals used in research under the AWA. In fact, the Secretary has promulgated an entire subset of generic animal welfare regulations that govern the care and handling of animals not specifically mentioned in the statute but are covered by the AWA because they are warm-blooded and used for research.[34] These generic regulations address animal care including feeding, watering, temperature, cage space, and handling.

USDA has also admitted that birds, rats, and mice are used for the purposes described in the AWA.[35] However, USDA's generic animal care regulations do not cover birds, rats, and mice. This exclusion leaves these species with no minimum standards for their care, no protections under the Act, and no legal barriers preventing cruelty, intentional or negligent deprivation of food, water, shelter or veterinary care. These effects are contrary to Congress' stated purpose under the AWA of providing humane care and treatment for animals used in research.[36]

Based on this information, the purpose and plain meaning of the AWA indicates that USDA's exclusion of birds, rats, and mice contradicts and frustrates the AWA. Furthermore, the interpretation of the AWA as explained in the OTA report, USDA's admissions, and USDA's own regulations indicates that the exclusion is inconsistent with the statute. A *Chevron* step one analysis shows that the statute is unambiguous and, therefore, USDA should immediately redefine the term ''animal'' and regulate birds, rats, and mice.

B. The Second Step of the Chevron Analysis Shows That the Definition of ''Animal'' Is Not Reasonable

The second step of the *Chevron* analysis is only necessary if the statute is ambiguous. The key issue is ''whether the agency's view that [its construction] is appropriate in the context of this particular program is a reasonable one.'' [37] In this case, even if the AWA statutory language is ambiguous, USDA's regulation is not reasonable. Applying *Chevron* to this case presents the issue of whether USDA has the discretion to exclude birds, rats, and mice from the definition of ''animal.''

1. The Animal Welfare Act's Legislative History Does Not Support USDA's Regulation Defining ''Animal''

Congress first passed the AWA in 1966 and defined ''animal'' as a ''live dog, cat, monkey (nonhuman primate mammal), guinea pig, hamster and rabbit.'' [38] This language limited AWA protection to six specific species. However in 1970, Congress amended the statute to include ''such other warm-blooded animal as the Secretary may determine is being used, or intended for use, for research, testing, experimentation.'' [39] This language broadened the number of species protected under the Act and has remained throughout both the 1976 and 1985 amendments.

The legislative history of the AWA provides no indication that Congress authorized the Secretary's regulation excluding birds, rats, and mice. When the AWA was amended in 1970, Congress was aware of the wide use of birds, rats, and mice in research but did not explicitly deny these animals protection under the Act. Instead, Congress used the phrase ''warm-blooded animal'' in order to expand the species of animals protected by the Act.

If Congress had intended for the Secretary to have unlimited discretion to designate which warm-blooded animals were to be protected under the Act, then the legislature would have specifically stated it in the statute. Not

[28] *Motor & Equipment Manufacturers Ass'n, Inc. v. E.P.A.*, 627 F.2d 1095 (D.C. Cir. 1979), *cert. denied*, *General Motors Corp. v. Costle*, 446 U.S. 952 (1980).

[29] *Id.* sec. 2132(g).

[30] U.S. Congress, Office of Technology Assessment, Alternatives to Animal Use in Research, Testing, and Education (1986) [hereinafter OTA Report].

[31] *Id.* at 278.

[32] USDA response at 1.

[33] 54 FR 10824 (March 15, 1989).

[34] 9 CFR 3.125 (subpart f).

[35] *Madigan*, 781 F. supp. at 801.

[36] U.S.C. 2131.

[37] *Chevron*, 467 U.S. at 845.

[38] 80 Stat. 350, 351 (1966).

[39] 7 U.S.C. 2132(g).

only is there no statutory language granting USDA unlimited discretion, but the legislative history also reveals that Congress did *not* intend for the Secretary to have broad discretion. This intent is evident by Congress' rejection of Representative Whitehurst's proposed amendment which defined ''animal'' to include ''any warm-blooded animal, as determined by the Secretary.'' [40] This amendment would have given the Secretary the discretion to choose which warm-blooded animals would be protected by the Act and thus would support USDA's exclusion of birds, rats, and mice.

Instead of amending the AWA to give the Secretary broad discretion to exclude animals, Congress wanted to expand the definition of ''animal'' to include more species while specifically delineating which animals would be exempted. The house and floor discussions support this assertion:

Rep. Thomas Foley (D-Washington), speaking on behalf of the House Agriculture Committee, remarked that ''(t)his bill, within its definition *includes all warm-blooded animals designated by the Secretary, with certain specific limitations and defined exceptions*.'' [41]

Rep. Catherine May (R-Washington), urging her colleagues to approve the legislation described the bill: ''First, it *expands the definition of the term 'animal' to include more species*. The present law applies only to live dogs, cats, rabbits, hamsters, guinea pigs, and monkeys. *All warm-blooded animals designated by the Secretary of Agriculture, with limited exceptions would be included*.'' [42]

Rep. Wiley Mayne (R-Iowa) agreed that the bill ''*expands the definition of covered animals to include all warm-blooded animals designated by the Secretary*, rather than just live dogs, cats, rabbits, hamsters, guinea pigs, and monkeys.'' [43]

Rep. Wilmer Mizell (R-North Carolina) explained that ''[t]his bill includes provisions regulating the transportation, purchase, sale, housing, care, handling and treatment of warm-blooded animals used in research * * * *(m)ore species of animals will be protected: all warm-blooded animals designated by the Secretary of Agriculture, with but a few specific exceptions.*'' [44]

Rep. Robert Price (R-Texas) remarked that the bill ''extends the definition to include all warm-blooded animals designated by the Secretary of Agriculture, *with certain specific limitations and defined exceptions*.'' [45]

The Supreme Court has stated that when ''statements of individual legislators * * * are consistent with the statutory language and legislative history, they provide evidence of Congress' intent.'' [46] The statements from these individual legislatures all indicate that Congress intended the AWA to cover *all* warm-blooded animals used in research, including birds, rats, and mice with only a few specific exceptions.

A House Committee on Agriculture report which accompanied the proposed bill also supports this premise: ''This bill includes within its definition all warm-blooded animals designated by the Secretary with only *limited and specifically defined exceptions*.'' [47] Additionally, a letter from then Secretary of Agriculture J. Phil Campbell to W.R. Poage, Chairman of the Committee on Agriculture, explained that ''(i)f Federal regulation of laboratory animals is extended to all warm-blooded animals, we suggest it would be appropriate and consistent to extend the species of animals presently regulated under (the AWA) to include all warm-blooded animals.'' Not only does the legislative history show Congress' intent in expanding the number of animals protected by the AWA, but it also shows that the Secretary of Agriculture understood and supported Congress' purpose.

Based on the legislative history, it is unreasonable to conclude that Congress amended the AWA in order to provide more animals protection while also giving the Secretary the broad discretion to exclude the majority of animals used in research, testing, and experimentation. The only discretion Congress granted the Secretary was the authority to determine whether warm-blooded animals are being used for research, testing, or experimentation. Indeed, in *Madigan*, the court looked at USDA's discretionary authority and found that, ''since the USDA does not dispute that birds, rats, and mice are used for [research] purposes, it is inconsistent with the plain meaning of the statute and 'the unambiguously expressed intent of Congress to exclude them from coverage under the Act.' '' [48] The court also conducted a *Chevron* step two analysis and found that the agency's definition of ''animal'' was not supported by the legislative history.[49]

The legislative history along with the reasoning in the *Madigan* decision shows that USDA does not have the discretion to choose which warm-blooded animals used in research it will deny AWA protection. The effect of USDA's exclusion demonstrates its illegality, because the majority of laboratory animals are not presently covered by USDA's animal welfare regulations. Based on this information, USDA's exclusion of birds, rats, and mice is ultra vires because Congress has not specifically granted the agency authority to decide on a matter that Congress has already addressed.

2. USDA Has Not Reasonably Justified Its Regulation Excluding Birds, Rats, and Mice From Animal Welfare Protection

USDA's interpretation of the AWA is not reasonable because it does not satisfy the *Chevron* step-two framework. In *Chevron*, the Supreme Court found that EPA's construction of the Clean Air Act was reasonable because the agency: (1) Advanced a reasonable explanation for its conclusion that the regulations serve the statutory objectives; (2) balanced competing statutory concerns in a technical and complex regulatory scheme; and (3) engaged consistently and historically in a search to review and question its policy on a continuing basis.[50]

In this case, USDA has failed to show the reasonableness of its regulation. In fact, USDA enacted its regulation excluding birds, rats, and mice in 1971 without any explanation showing how the exclusion of these animals meets the AWA's objective in providing for the humane treatment of animals. [51] In 1989, when questioned about the exclusion, the agency stated ''we do have the authority to regulate these animals, though except for wild rats and mice, we have never covered them in our regulations. However, * * * we are considering developing regulations and standards for them.'' [52] Nine years have passed since this statement and during this time, the agency has failed to initiate any rulemaking proceedings to regulating birds, rats, and mice. USDAs failure to give any explanation for its arbitrary exclusion of these animals does not demonstrate reasoned decision-making. The Supreme Court addressed the issue of agency deference by stating:

[40] *Hearings before the Subcommittee on Livestock and Grains of the House Agricultural Committee on H.R. 13957 to Amend the 1966 Act, 91st Cong., 2d Sess. 84 (1970).*

[41] 116 Cong. Rec. H40154 (Dec. 7, 1970) (emphasis added).

[42] 116 Cong. Rec. H40156 (Dec. 7, 1970) (emphasis added).

[43] 116 Cong. Rec. H40158 (Dec. 7, 1970) (emphasis added).

[44] 116 Cong. Rec. H40159 (Dec. 7, 1970) (emphasis added).

[45] 116 Cong. Rec. H40159 (Dec. 7, 1970) (emphasis added).

[46] *Brock* v. *Pierce County*, 476 U.S. 253, 106 S.Ct. 1834 (1986).

[47] H.R. Rep. No. 1651, 91st Cong., 2d Sess., *reprinted in* 1970 U.S.C.C.A.N. 5103, 5104 (emphasis added).

[48] 781 F. Supp. at 801 (citation omitted).

[49] *Id.* at 802.

[50] *Chevron*, 467 U.S. 863–65.

[51] 36 FR 24917–27 (Dec. 24, 1971).

[52] 54 FR 10823 (March 15, 1989).

Agency deference has not come so far that we will uphold regulations wherever it is possible to conceive a basis for administrative action * * * Thus the mere fact that there is ''some rational basis within the knowledge and experience of the (regulators)'' under which they ''might have concluded'' that the regulation was necessary to discharge their statutorily authorized mission, will not suffice to validate agency decisionmaking * * * Our recognition of Congress need to vest administrative agencies with ample power to assist in the difficult task of governing a vast and complex industrial Nation carries with it the correlative responsibility of the agency to explain the rationale and factual basis for its decision, even though we show respect for the agency's judgement in both.[53]

Whether USDA has discretionary authority under the AWA to exclude these animals was addressed in *Madigan*. Judge Richey found that USDA's argument for discretionary authority under the Act was ''strained and unlikely.'' [54] USDA has not shown that excluding birds, rats, and mice is reasonable. Therefore, USDA should redefine ''animal'' in accordance with the AWA.

C. USDA Was Arbitrary and Capricious in Refusing AAVS's Petition To Initiate Rulemaking Proceedings

The only explanation USDA gave for denying AAVS' petition for rulemaking was that it was not economically practical.[55] In denying AAVS' petition, USDA analyzed the increase cost that would result from regulating birds, rats, and mice. Based on that information, USDA decided not to grant these animals AWA protection. USDA's reliance on budgetary constraints is arbitrary and capricious because the agency failed to consider the many parts of the Act that are self implementing.[56]

In *Madigan*, the court explained that ''birds, rats, and mice could be included in the definition without requiring the expenditure of significant agency resources'' because the AWA includes many provisions that are self-implementing by the regulated industry.[57] By regulating these animals, researchers would be required to treat animals humanely without any action from the agency. In *Madigan*, the court held that USDA's denial of ALDF's rulemaking petition based upon the availability of resources and increase cost was arbitrary and capricious and not in accordance with law.[58] Based upon the *Madigan* decision, USDA's denial of a rulemaking petition to redefine ''animal'' based solely on economic reasons is not valid. Therefore, USDA should grant this petition by initiating rulemaking proceedings to regulate birds, rats, and mice consistently with the AWA.

V. Agency Action Requested

The AWA's purpose and plain meaning, Congress' legislative intent, and the reasoning in *Madigan* show that birds, rats, and mice should be granted protection under the AWA. Furthermore, the USDA has acknowledged that it has the authority to regulate rats and mice and has admitted that the agency was considering developing regulations for these animals.[59] However, the agency's continual delay in addressing this matter along with its justification for denying these animals protection is unreasonable and demands further consideration.

Therefore, for the reasons cited in this petition, the petitioner requests that the USDA immediately amend its current definition to include mice, rats, and birds under the AWA. The proposed regulation should be amended to read as follows:

Animal means any live or dead dog, cat, nonhuman primate, guinea pig, hamster, rabbit, or any other warm-blooded animal, which is being used, or is intended for use for research, teaching, testing, experimentation, or exhibition purposes, or as a pet. This term excludes horses not used for research purposes and other farm animals, such as, but not limited to livestock or poultry, used or intended for use as food or fiber, or livestock or poultry used or intended for use for improving animal nutrition, breeding, management, or production efficiency, or for improving the quality of food or fiber. With respect to a dog, the term means all dogs, including those used for hunting, security, or breeding purposes.

Except as described above, petitioners know of no other similar issue, act, or transaction to this petition currently being considered or investigated by any USDA office, other federal agency, department, or instrumentality, state municipal agency or court, or by any law enforcement agency.

As required by 7 CFR Subtitle A § 1.28, the USDA is required to give this petition prompt consideration. Petitioner is requesting a substantive response to this petition within ninety (90) calendar days. In the absence of an affirmative response, petitioners will be compelled to consider litigation in order to achieve the agency actions requested.

The undersigned certifies that, to the best knowledge and belief of the undersigned, this petition includes all information and views on which the petition relies, and that it includes representative data known to the petitioner which are unfavorable to the petition.

On behalf of the petitioners,
Andrew Kimbrell, Esq.,
Joseph Mendelson, III, Esq.,
Tracie Letterman, Esq.,
International Center for Technology Assessment, 310 D Street, NE, Washington, DC 20002, (202) 547–9359.
Of Counsel,
Valerie Stanley,
Animal Legal Defense Fund, 401 East Jefferson Street, Suite 206, Rockville, MD 20850.
Attorneys for Petitioners.

[FR Doc. 99–1920 Filed 1–27–99; 8:45 am]
BILLING CODE 3410–34–P

[53] *Bowen* v. *Am. Hosp. Ass'n.*, 476 U.S. 610, 627 (1986) (citations omitted).

[54] Animal Legal Defense Fund, 781 F. Supp. at 800–806

[55] USDA response at 1–2.

[56] *See* eg., 7 U.S.C. 2143 (a)(7)(A) (requiring each research facility to provide information on procedures that may produce pain or distress in animals and also provide assurances that alternatives were considered) 7 U.S.C. 2136 (every research facility shall register with the Secretary).

[57] 781 F. Supp. at 803.

[58] *Id.*

[59] 54 FR 10,823.

DEPARTMENT OF TRANSPORTATION

Federal Aviation Administration

14 CFR Part 39

[Docket No. 98–NM–225–AD]

RIN 2120–AA64

Airworthiness Directives; Boeing Model 757 Series Airplanes

AGENCY: Federal Aviation Administration, DOT.

ACTION: Notice of proposed rulemaking (NPRM).

SUMMARY: This document proposes the adoption of a new airworthiness directive (AD) that is applicable to certain Boeing Model 757 series airplanes. This proposal would require revising the Airworthiness Limitations Section of the Instructions for maintenance manual [757 Airworthiness Limitations Instructions (ALI)]. The revision would incorporate certain inspections and compliance times to detect fatigue cracking of principal structural elements (PSE). This proposal is prompted by analysis of data that identified specific initial inspection thresholds and repetitive inspection intervals for certain PSE's to be added to the ALI. The actions specified by the proposed AD are

intended to ensure that fatigue cracking of various PSE's is detected and corrected; such fatigue cracking could adversely affect the structural integrity of these airplanes.

DATES: Comments must be received by March 15, 1999.

ADDRESSES: Submit comments in triplicate to the Federal Aviation Administration (FAA), Transport Airplane Directorate, ANM–114, Attention: Rules Docket No. 98–NM–225–AD, 1601 Lind Avenue, SW., Renton, Washington 98055–4056. Comments may be inspected at this location between 9:00 a.m. and 3:00 p.m., Monday through Friday, except Federal holidays.

The service information referenced in the proposed rule may be obtained from Boeing Commercial Airplane Group, P.O. Box 3707, Seattle, Washington 98124–2207. This information may be examined at the FAA, Transport Airplane Directorate, 1601 Lind Avenue, SW., Renton, Washington.

FOR FURTHER INFORMATION CONTACT: Patrick Safarian, Aerospace Engineer, Airframe Branch, ANM–120S, FAA, Seattle Aircraft Certification Office, 1601 Lind Avenue SW., Renton, Washington; telephone (425) 227–2775; fax (425) 227–1181.

SUPPLEMENTARY INFORMATION:

Comments Invited

Interested persons are invited to participate in the making of the proposed rule by submitting such written data, views, or arguments as they may desire. Communications shall identify the Rules Docket number and be submitted in triplicate to the address specified above. All communications received on or before the closing date for comments, specified above, will be considered before taking action on the proposed rule. The proposals contained in this notice may be changed in light of the comments received.

Comments are specifically invited on the overall regulatory, economic, environmental, and energy aspects of the proposed rule. All comments submitted will be available, both before and after the closing date for comments, in the Rules Docket for examination by interested persons. A report summarizing each FAA-public contact concerned with the substance of this proposal will be filed in the Rules Docket.

Commenters wishing the FAA to acknowledge receipt of their comments submitted in response to this notice must submit a self-addressed, stamped postcard on which the following statement is made: ''Comments to Docket Number 98–NM–225–AD.'' The postcard will be date stamped and returned to the commenter.

Availability of NPRMs

Any person may obtain a copy of this NPRM by submitting a request to the FAA, Transport Airplane Directorate, ANM–114, Attention: Rules Docket No. 98–NM–225–AD, 1601 Lind Avenue, SW., Renton, Washington 98055–4056.

Discussion

In accordance with airworthiness standards requiring ''damage-tolerance assessments'' [reference current section 1529 of parts 23, 25, 27, and 29 of the Federal Aviation Regulations (FAR); section 4 of parts 33 and 35 of the FAR; section 82 of part 31 of the FAR; and the Appendices referenced in those sections], all products certificated to comply with those sections must have Instructions for Continued Airworthiness (or, for some products, maintenance manuals) that include an Airworthiness Limitations Section. That section must set forth:

- Mandatory replacement times for structural components,
- Structural inspection intervals, and
- Related approved structural inspection procedures necessary to show compliance with the damage-tolerance requirements.

Compliance with the terms specified in the Airworthiness Limitations Section is required by FAR sections 43.16 (for persons maintaining products) and 91.403 (for operators).

As airplanes gain service experience, or as the result of post-certification testing and evaluation, it may become necessary to add additional life limits or structural inspections in order to ensure the continued structural integrity of the airplane. The manufacturer may revise the Airworthiness Limitations Section to include new or more restrictive life limits and inspections. However, in order to require compliance with those revised life limits and/or inspection intervals, the FAA must engage in rulemaking. Because loss of structural integrity would result in an unsafe condition, it is appropriate to impose these requirements through the airworthiness directive (AD) process.

Actions Taken by the Manufacturer

Boeing recently has completed extensive analyses and testing of fatigue cracking of principal structural elements (PSE) on certain Model 757 series airplanes, which included:

- Crack growth analysis,
- Service experience analysis,
- Crack growth testing,
- Fatigue testing, and
- Analysis of the effectiveness of applicable non-destructive inspection
- Techniques to detect cracking and other anomalies.

The results of the testing and analyses demonstrated the need to incorporate certain inspections into the current Airworthiness Limitations Instructions (ALI).

New Revision of ALI

The FAA has reviewed and approved Boeing Document D622N001–9, Revision ''MAY 1997,'' titled ''757 Maintenance Planning Data Document (MPD) Section 9, Airworthiness Limitations and Certification Maintenance Requirements (CMRs).'' That document is the ALI of the maintenance manual to which this proposed AD refers. That document describes specific initial inspection thresholds and repetitive inspection intervals for certain PSE's [identified as structural significant items (SSI) in the ALI]. That document explicitly identifies, for the first time, all of the PSE's that are to be inspected in accordance with the requirements of the ALI.

Although the Boeing document includes thresholds for all PSE's, in many cases the identified threshold is 50,000 total flight cycles for passenger airplanes. Because none of the affected airplanes is likely to reach this threshold for a number of years, Boeing has not yet developed the specific inspection procedures for these PSE's. However, these procedures will be developed well before any airplane reaches the threshold, and the FAA may consider further rulemaking when they become available.

Explanation of Requirements of Proposed Rule

Since an unsafe condition has been identified that is likely to exist or develop on other products of this same type design, the proposed AD would require operators to revise the 757 ALI to incorporate Boeing Document D622N001–9, Revision ''MAY 1997'' of the ALI. However, nothing in this proposed AD is intended to affect any of the requirements related to the life limits or certification maintenance requirements that are contained elsewhere in the ALI. This proposed AD is intended to address only those PSE inspections that are referred to in Chapter B. (''Airworthiness Limitations—Structural Inspections'') of Boeing Document D622N001–9, Revision ''MAY 1997.''

Explanation of Action Taken by the FAA

As stated previously, in order to require compliance with these inspection intervals and life limits, the FAA must engage in rulemaking, namely, the issuance of an AD. For products certificated to comply with the referenced part 25 requirements, it is within the authority of the FAA to issue an AD requiring a revision to the Airworthiness Limitations Section that includes reduced life limits, or new or different structural inspection requirements. These revisions then are mandatory for operators under FAR section 91.403(c), which prohibits operation of an airplane for which airworthiness limitations have been issued unless the inspection intervals specified in those limitations have been complied with.

Once that document is revised, as required, and the AD has been fully complied with, the life limit or structural inspection change remains enforceable as a part of the Airworthiness Limitations. (This is analogous to AD's that require changes to the Limitations Section of the Airplane Flight Manual.)

Requiring a revision of the Airworthiness Limitations, rather than requiring individual inspections, is advantageous for operators because it allows them to record AD compliance status only once—at the time they make the revision—rather than after every inspection. It also has the advantage of keeping all Airworthiness Limitations, whether imposed by original certification or by AD, in one place within the operator's maintenance program, thereby reducing the risk of non-compliance because of oversight or confusion.

Determination of Grace Period

This proposed AD allows operators up to three years after the effective date of this AD to accomplish the ALI revision required by this AD. This period provides operators of airplanes that are approaching or have already reached the 25,000-flight-cycle inspection threshold with a reasonable amount of time to plan and perform the inspections. The FAA notes that only one PSE in the ALI has an initial inspection threshold of 25,000 total flight cycles. The majority of PSE's in the ALI have an initial inspection threshold that corresponds to the design service objective of the affected airplane (i.e., 50,000 total flight cycles). In addition, the Model 757 Structures Working Group, whose membership is composed of many of the major operators worldwide and almost all U.S. operators, has been aware of the specific contents and requirements of this ALI revision since August 1996. These facts have led the FAA to determine that three years is an appropriate and reasonable grace period for operators to perform the earliest PSE inspections.

Cost Impact

There are approximately 764 Boeing Model 757 series airplanes of the affected design in the worldwide fleet. The FAA estimates that 300 airplanes of U.S. registry would be affected by this proposed AD, that it would take approximately 1 work hour per airplane to accomplish the proposed actions, and that the average labor rate is $60 per work hour. Based on these figures, the cost impact of the proposed AD on U.S. operators is estimated to be $18,000, or $60 per airplane.

The cost impact figure discussed above is based on assumptions that no operator has yet accomplished any of the proposed requirements of this AD action, and that no operator would accomplish those actions in the future if this AD were not adopted.

Although this proposed AD requires only a revision to the current ALI, the FAA recognizes that the inspections contained in the ALI would then be required by parts 43 and 91 of the FAR. The FAA estimates that it would take approximately 1,000 work hours to accomplish all of the ALI inspections. At an average labor rate of $60 per work hour, the cost to perform the ALI inspections (required by FAR parts 43 and 91, rather than by part 39) would be approximately $60,000 per airplane. The FAA notes that the majority of work hours needed to perform the inspections would be expended when an affected airplane reached the 50,000-flight-cycle threshold. Based upon current airplane utilization, the FAA estimates that no airplane would reach this threshold for at least 10 years.

Regulatory Impact

The regulations proposed herein would not have substantial direct effects on the States, on the relationship between the national government and the States, or on the distribution of power and responsibilities among the various levels of government. Therefore, in accordance with Executive Order 12612, it is determined that this proposal would not have sufficient federalism implications to warrant the preparation of a Federalism Assessment.

For the reasons discussed above, I certify that this proposed regulation (1) is not a ''significant regulatory action'' under Executive Order 12866; (2) is not a ''significant rule'' under the DOT Regulatory Policies and Procedures (44 FR 11034, February 26, 1979); and (3) if promulgated, will not have a significant economic impact, positive or negative, on a substantial number of small entities under the criteria of the Regulatory Flexibility Act. A copy of the draft regulatory evaluation prepared for this action is contained in the Rules Docket. A copy of it may be obtained by contacting the Rules Docket at the location provided under the caption **ADDRESSES.**

List of Subjects in 14 CFR Part 39

Air transportation, Aircraft, Aviation safety, Safety.

The Proposed Amendment

Accordingly, pursuant to the authority delegated to me by the Administrator, the Federal Aviation Administration proposes to amend part 39 of the Federal Aviation Regulations (14 CFR part 39) as follows:

PART 39—AIRWORTHINESS DIRECTIVES

1. The authority citation for part 39 continues to read as follows:

Authority: 49 U.S.C. 106(g), 40113, 44701.

§ 39.13 [Amended]

2. Section 39.13 is amended by adding the following new airworthiness directive:

Boeing: Docket 98–NM–225–AD.

Applicability: Model 757 series airplanes having line numbers 1 through 764 inclusive, certificated in any category.

Note 1: This AD applies to each airplane identified in the preceding applicability provision, regardless of whether it has been modified, altered, or repaired in the area subject to the requirements of this AD. For airplanes that have been modified, altered, or repaired so that the performance of the requirements of this AD is affected, the owner/operator must request approval for an alternative method of compliance in accordance with paragraph (c) of this AD. The request should include an assessment of the effect of the modification, alteration, or repair on the unsafe condition addressed by this AD; and, if the unsafe condition has not been eliminated, the request should include specific proposed actions to address it.

Compliance: Required as indicated, unless accomplished previously.

To ensure continued structural integrity of these airplanes, accomplish the following:

(a) Within 3 years after the effective date of this AD, revise Section 9 of the Model 757 Maintenance Planning Data (MPD) Document entitled ''Airworthiness Limitations and Certification Maintenance Requirements (CMRs)'' to incorporate Chapter B. of Boeing Document D622N001–9, Revision ''MAY 1997.''

Note 2: The referenced Chapter B. contains a requirement that cracks found during the specified inspections be reported to the Seattle Aircraft Certification Office. Information collection requirements contained in this regulation have been approved by the Office of Management and Budget under the provisions of the Paperwork Reduction Act of 1980 (44 U.S.C. 3501, *et seq.*) and have been assigned OMB Control Number 2120–0056.

(b) Except as provided in paragraph (c) of this AD: After the actions required by paragraph (a) of this AD have been accomplished, no alternative inspections or inspection intervals shall be approved for the PSE's contained in Boeing Document D622N001–9, Revision ''MAY 1997.''

(c) An alternative method of compliance or adjustment of the compliance time that provides an acceptable level of safety may be used if approved by the Manager, Seattle Aircraft Certification Office (ACO), FAA, Transport Airplane Directorate. Operators shall submit their requests through an appropriate FAA Principal Maintenance Inspector, who may add comments and then send it to the Manager, Seattle ACO.

Note 3: Information concerning the existence of approved alternative methods of compliance with this AD, if any, may be obtained from the Seattle ACO.

(d) Special flight permits may be issued in accordance with sections 21.197 and 21.199 of the Federal Aviation Regulations (14 CFR 21.197 and 21.199) to operate the airplane to a location where the requirements of this AD can be accomplished.

Issued in Renton, Washington, on January 21, 1999.

Darrell M. Pederson,

Acting Manager, Transport Airplane Directorate, Aircraft Certification Service.

[FR Doc. 99–1979 Filed 1–27–99; 8:45 am]

BILLING CODE 4910–13–U

DEPARTMENT OF TRANSPORTATION

Federal Aviation Administration

14 CFR Part 39

[Docket No. 98–NM–157–AD]

RIN 2120–AA64

Airworthiness Directives; Dornier Model 328–100 Series Airplanes

AGENCY: Federal Aviation Administration, DOT.

ACTION: Supplemental notice of proposed rulemaking; reopening of comment period.

SUMMARY: This document revises an earlier proposed airworthiness directive (AD), applicable to all Dornier Model 328–100 series airplanes, that would have required repetitive lubrication of the engine control push-pull cables. That proposal was prompted by issuance of mandatory continuing airworthiness information by a foreign civil airworthiness authority. This new action revises the proposed rule by adding a requirement to install heating tubes on the control cables in the cockpit area and in the left-hand and right-hand engine balconies, which would terminate the repetitive lubrication requirement. The actions specified by this new proposed AD are intended to prevent ice from building up on the engine control push-pull cables, which could result in friction or jamming of the engine controls, and consequent reduced controllability of the airplane.

DATES: Comments must be received by February 22, 1999.

ADDRESSES: Submit comments in triplicate to the Federal Aviation Administration (FAA), Transport Airplane Directorate, ANM–114, Attention: Rules Docket No. 98–NM–157–AD, 1601 Lind Avenue, SW., Renton, Washington 98055–4056. Comments may be inspected at this location between 9:00 a.m. and 3:00 p.m., Monday through Friday, except Federal holidays.

The service information referenced in the proposed rule may be obtained from FAIRCHILD DORNIER, DORNIER Luftfahrt GmbH, P.O. Box 1103, D–82230 Wessling, Germany. This information may be examined at the FAA, Transport Airplane Directorate, 1601 Lind Avenue, SW., Renton, Washington.

FOR FURTHER INFORMATION CONTACT: Norman B. Martenson, Manager, International Branch, ANM–116, FAA, Transport Airplane Directorate, 1601 Lind Avenue, SW., Renton, Washington 98055–4056; telephone (425) 227–2110; fax (425) 227–1149.

SUPPLEMENTARY INFORMATION:

Comments Invited

Interested persons are invited to participate in the making of the proposed rule by submitting such written data, views, or arguments as they may desire. Communications shall identify the Rules Docket number and be submitted in triplicate to the address specified above. All communications received on or before the closing date for comments, specified above, will be considered before taking action on the proposed rule. The proposals contained in this notice may be changed in light of the comments received.

Comments are specifically invited on the overall regulatory, economic, environmental, and energy aspects of the proposed rule. All comments submitted will be available, both before and after the closing date for comments, in the Rules Docket for examination by interested persons. A report summarizing each FAA-public contact concerned with the substance of this proposal will be filed in the Rules Docket.

Commenters wishing the FAA to acknowledge receipt of their comments submitted in response to this notice must submit a self-addressed, stamped postcard on which the following statement is made: ''Comments to Docket Number 98–NM–156–AD.'' The postcard will be date stamped and returned to the commenter.

Availability of NPRMs

Any person may obtain a copy of this NPRM by submitting a request to the FAA, Transport Airplane Directorate, ANM–114, Attention: Rules Docket No. 98–NM–156–AD, 1601 Lind Avenue, SW., Renton, Washington 98055–4056.

Discussion

A proposal to amend part 39 of the Federal Aviation Regulations (14 CFR part 39) to add an airworthiness directive (AD), applicable to all Dornier Model 328–100 series airplanes, was published as a notice of proposed rulemaking (NPRM) in the **Federal Register** on July 7, 1998 (63 FR 36621). That NPRM would have required repetitive lubrication of the engine control push-pull cables. That NPRM was prompted by the issuance of mandatory continuing airworthiness information by a foreign civil airworthiness authority. Ice building up on the engine control push-pull cables during flight prompted operators to descend to a lower altitude (higher temperature) to melt off any build-up. Such build-up of ice on the engine control push-pull cables, if not corrected, could result in friction or jamming of the engine controls, and consequent reduced controllability of the airplane.

Actions Since Issuance of Previous Proposal

When the previous NPRM was issued, the FAA indicated that the actions proposed in that NPRM were considered interim action and that further rulemaking action was being considered. The manufacturer now has developed a modification, which, when accomplished, would terminate the requirement for repetitive lubrication of the engine control push-pull cables. Consequently, the FAA has determined that further rulemaking action is indeed necessary in order to address the unsafe condition and ensure the continued safe operation of those airplanes; this

supplemental NPRM follows from that determination.

New Service Information

Dornier has issued Service Bulletin SB–328–76–254, dated June 30, 1998, and Revision 1, dated August 6, 1998, that describe procedures for installation of heating tubes on the control cables in the cockpit area. Dornier also has issued Service Bulletin SB–328–76–267, Revision 1, dated September 25, 1998, and Revision 2, dated October 8, 1998, that describe procedures for installation of heating tubes on the control cables in the left-hand and right-hand engine balconies. Installation of heating tubes on the control cables in accordance with those service bulletins would eliminate the need for repetitive lubrication of the engine control push-pull cables. The Luftfahrt-Bundesamt (LBA), which is the airworthiness authority for Germany, classified these service bulletins as mandatory and issued German airworthiness directive 1997–148/6, dated December 3, 1998, in order to assure the continued airworthiness of these airplanes in Germany.

Conclusion

Since this change expands the scope of the originally proposed rule by proposing to add a requirement to install heating tubes on the control cables of the cockpit area and in the left-hand and right-hand engine balconies, the FAA has determined that it is necessary to reopen the comment period to provide additional opportunity for public comment.

Cost Impact

The FAA estimates that 50 airplanes of U.S. registry would be affected by this proposed AD, that it would take approximately 4 work hours per airplane to accomplish the proposed lubrication, and that the average labor rate is $60 per work hour. Based on these figures, the cost impact on U.S. operators is estimated to be $12,000, or $240 per airplane.

The FAA estimates that the installation of heating tubes on the control cables proposed in this AD action would take approximately 50 work hours per airplane to accomplish, and that the average labor rate is $60 per work hour. Required parts would be supplied by the manufacturer at no cost to the operators. Based on these figures, the cost impact on U.S. operators is estimated to be $150,000, or $3,000 per airplane.

The cost impact figures discussed above are based on assumptions that no operator has yet accomplished any of the proposed requirements of this AD action, and that no operator would accomplish those actions in the future if this AD were not adopted.

Regulatory Impact

The regulations proposed herein would not have substantial direct effects on the States, on the relationship between the national government and the States, or on the distribution of power and responsibilities among the various levels of government. Therefore, in accordance with Executive Order 12612, it is determined that this proposal would not have sufficient federalism implications to warrant the preparation of a Federalism Assessment.

For the reasons discussed above, I certify that this proposed regulation (1) is not a ''significant regulatory action'' under Executive Order 12866; (2) is not a ''significant rule'' under the DOT Regulatory Policies and Procedures (44 FR 11034, February 26, 1979); and (3) if promulgated, will not have a significant economic impact, positive or negative, on a substantial number of small entities under the criteria of the Regulatory Flexibility Act. A copy of the draft regulatory evaluation prepared for this action is contained in the Rules Docket. A copy of it may be obtained by contacting the Rules Docket at the location provided under the caption **ADDRESSES.**

List of Subjects in 14 CFR Part 39

Air transportation, Aircraft, Aviation safety, Safety.

The Proposed Amendment

Accordingly, pursuant to the authority delegated to me by the Administrator, the Federal Aviation Administration proposes to amend part 39 of the Federal Aviation Regulations (14 CFR part 39) as follows:

PART 39—AIRWORTHINESS DIRECTIVES

1. The authority citation for part 39 continues to read as follows:

Authority: 49 U.S.C. 106(g), 40113, 44701.

§ 39.13 [Amended]

2. Section 39.13 is amended by adding the following new airworthiness directive:

Dornier Luftfahrt GMBH: Docket 98–NM–157–AD.

Applicability: All Model 328–100 series airplanes, certificated in any category.

Note 1: This AD applies to each airplane identified in the preceding applicability provision, regardless of whether it has been modified, altered, or repaired in the area subject to the requirements of this AD. For airplanes that have been modified, altered, or repaired so that the performance of the requirements of this AD is affected, the owner/operator must request approval for an alternative method of compliance in accordance with paragraph (c) of this AD. The request should include an assessment of the effect of the modification, alteration, or repair on the unsafe condition addressed by this AD; and, if the unsafe condition has not been eliminated, the request should include specific proposed actions to address it.

Compliance: Required as indicated, unless accomplished previously.

To prevent ice from building up on the engine control push-pull cables, which could result in friction or jamming of the engine controls, and consequent reduced controllability of the airplane, accomplish the following:

(a) Within 2 months after the effective date of this AD, lubricate the engine control push-pull cables in accordance with Dornier Alert Service Bulletins ASB–328–76–022, dated December 22, 1997, and ASB–328–76–015, Revision 3, dated January 9, 1998. Repeat the lubrication thereafter at intervals not to exceed 300 flight hours until the actions required by paragraph (b) of this AD are accomplished.

(b) Within 6 months after the effective date of this AD, accomplish the actions specified in paragraphs (b)(1) and (b)(2) of this AD. Accomplishment of these actions constitutes terminating action for the repetitive lubrication requirement of paragraph (a) of this AD.

(1) Install heating tubes on the control cables in the cockpit area in accordance with Dornier Service Bulletin SB–328–76–254, dated June 30, 1998, or Revision 1, dated August 6, 1998.

(2) Install heating tubes on the control cables in the left and right engine balconies in accordance with Dornier Service Bulletin SB–328–76–267, Revision 1, dated September 25, 1998, or Revision 2, dated October 8, 1998.

(c) An alternative method of compliance or adjustment of the compliance time that provides an acceptable level of safety may be used if approved by the Manager, International Branch, ANM–116, FAA, Transport Airplane Directorate. Operators shall submit their requests through an appropriate FAA Principal Maintenance Inspector, who may add comments and then send it to the Manager, International Branch, ANM–116.

Note 2: Information concerning the existence of approved alternative methods of compliance with this AD, if any, may be obtained from the International Branch, ANM–116.

(d) Special flight permits may be issued in accordance with sections 21.197 and 21.199 of the Federal Aviation Regulations (14 CFR 21.197 and 21.199) to operate the airplane to a location where the requirements of this AD can be accomplished.

Note 3: The subject of this AD is addressed in German airworthiness directives 1998–105, dated January 30, 1998, and 1997–148/6, dated December 3, 1998.

Issued in Renton, Washington, on January 21, 1999.

Darrell M. Pederson,

Acting Manager, Transport Airplane Directorate, Aircraft Certification Service.

[FR Doc. 99–1978 Filed 1–27–99; 8:45 am]

BILLING CODE 4910–13–U

DEPARTMENT OF TRANSPORTATION

Federal Aviation Administration

14 CFR Part 39

[Docket No. 97–NM–276–AD]

RIN 2120–AA64

Airworthiness Directives; Boeing Model 767 Series Airplanes

AGENCY: Federal Aviation Administration, DOT.

ACTION: Notice of proposed rulemaking (NPRM).

SUMMARY: This document proposes the adoption of a new airworthiness directive (AD) that is applicable to certain Boeing Model 767 series airplanes. This proposal would require revising the Airworthiness Limitations Section of the maintenance manual [767 Airworthiness Limitations Instructions (ALI)]. The revision would incorporate into the ALI certain inspections and compliance times to detect fatigue cracking of principal structural elements (PSE). This proposal is prompted by analysis of data that identified specific initial inspection thresholds and repetitive inspection intervals for certain PSE's to be added to the ALI. The actions specified by the proposed AD are intended to ensure that fatigue cracking of various PSE's is detected and corrected; such fatigue cracking could adversely affect the structural integrity of these airplanes.

DATES: Comments must be received by March 15, 1999.

ADDRESSES: Submit comments in triplicate to the Federal Aviation Administration (FAA), Transport Airplane Directorate, ANM–114, Attention: Rules Docket No. 97–NM–276–AD, 1601 Lind Avenue, SW., Renton, Washington 98055–4056. Comments may be inspected at this location between 9:00 a.m. and 3:00 p.m., Monday through Friday, except Federal holidays.

The service information referenced in the proposed rule may be obtained from Boeing Commercial Airplane Group, P.O. Box 3707, Seattle, Washington 98124–2207. This information may be examined at the FAA, Transport Airplane Directorate, 1601 Lind Avenue, SW., Renton, Washington.

FOR FURTHER INFORMATION CONTACT: Patrick Safarian, Aerospace Engineer, Airframe Branch, ANM–120S, FAA, Seattle Aircraft Certification Office, 1601 Lind Avenue SW., Renton, Washington; telephone (425) 227–2775; fax (425) 227–1181.

SUPPLEMENTARY INFORMATION:

Comments Invited

Interested persons are invited to participate in the making of the proposed rule by submitting such written data, views, or arguments as they may desire. Communications shall identify the Rules Docket number and be submitted in triplicate to the address specified above. All communications received on or before the closing date for comments, specified above, will be considered before taking action on the proposed rule. The proposals contained in this notice may be changed in light of the comments received.

Comments are specifically invited on the overall regulatory, economic, environmental, and energy aspects of the proposed rule. All comments submitted will be available, both before and after the closing date for comments, in the Rules Docket for examination by interested persons. A report summarizing each FAA-public contact concerned with the substance of this proposal will be filed in the Rules Docket.

Commenters wishing the FAA to acknowledge receipt of their comments submitted in response to this notice must submit a self-addressed, stamped postcard on which the following statement is made: ''Comments to Docket Number 97–NM–276–AD.'' The postcard will be date stamped and returned to the commenter.

Availability of NPRMs

Any person may obtain a copy of this NPRM by submitting a request to the FAA, Transport Airplane Directorate, ANM–114, Attention: Rules Docket No. 97–NM–276–AD, 1601 Lind Avenue, SW., Renton, Washington 98055–4056.

Discussion

In accordance with airworthiness standards requiring ''damage-tolerance assessments'' [reference current section 1529 of parts 23, 25, 27, and 29 of the Federal Aviation Regulations (FAR); section 4 of parts 33 and 35 of the FAR; section 82 of part 31 of the FAR; and the Appendices referenced in those sections], all products certificated to comply with those sections must have Instructions for Continued Airworthiness (or, for some products, maintenance manuals) that include an Airworthiness Limitations Section. That section must set forth:

- Mandatory replacement times for structural components,
- Structural inspection intervals, and
- Related approved structural inspection procedures necessary to show compliance with the damage-tolerance requirements.

Compliance with the terms specified in the Airworthiness Limitations Section is required by FAR sections 43.16 (for persons maintaining products) and 91.403 (for operators).

As airplanes gain service experience, or as the result of post-certification testing and evaluation, it may become necessary to add additional life limits or structural inspections in order to ensure the continued structural integrity of the airplane. The manufacturer may revise the Airworthiness Limitations Section to include new or more restrictive life limits and inspections. However, in order to require compliance with those revised life limits and/or inspection intervals, the FAA must engage in rulemaking. Because loss of structural integrity would result in an unsafe condition, it is appropriate to impose these requirements through the airworthiness directive (AD) process.

Actions Taken by the Manufacturer

Boeing recently has completed extensive analyses and testing of fatigue cracking of principal structural elements (PSE) on certain Model 767 series airplanes, which included:

- Crack growth analysis,
- Service experience analysis,
- Crack growth testing,
- Fatigue testing, and
- Analysis of the effectiveness of applicable non-destructive inspection techniques to detect cracking and other anomalies.

The results of the testing and analyses demonstrated the need to incorporate certain inspections into the current Airworthiness Limitations Instructions (ALI).

New Revision of ALI

The FAA has reviewed and approved Boeing Document D622T001–9, Revision ''JUNE 1997,'' titled ''767 Maintenance Planning Data (MPD) Document, Section 9, Airworthiness Limitations and Certification Maintenance Requirements (CMRs).'' That document is the ALI of the maintenance manual to which this proposed AD refers. That document describes specific initial inspection thresholds and repetitive inspection intervals for certain PSE's [identified as structural significant items (SSI) in the ALI]. That document explicitly

identifies, for the first time, all of the PSE's that are to be inspected in accordance with the requirements of the ALI.

Although the Boeing document includes thresholds for all PSE's, in many cases the identified threshold is 50,000 total flight cycles for passenger airplanes. Because none of the affected airplanes is likely to reach this threshold for a number of years, Boeing has not yet developed the specific inspection procedures for these PSE's. However, these procedures will be developed well before any airplane reaches the threshold, and the FAA may consider further rulemaking when they become available.

Explanation of Requirements of Proposed Rule

Since an unsafe condition has been identified that is likely to exist or develop on other products of this same type design, the proposed AD would require operators to revise the Boeing Model 767 ALI to incorporate Boeing Document D622T001–9, Revision ''JUNE 1997.'' However, nothing in this proposed AD is intended to affect any of the requirements related to the life limits or certification maintenance requirements that are contained elsewhere in the ALI. This proposed AD is intended to address only those PSE inspections that are referred to in Chapter B. ''Airworthiness Limitations-Structural Inspections'' of Boeing Document D622T001–9, Revision ''JUNE 1997.''

In addition, Model 767–300F freighter airplanes are not affected by this rule because the revision of the ALI that was in effect at the time of the first delivery of a Model 767–300F freighter already addressed the need for inspections of PSE's.

Explanation of Action Taken by the FAA

As stated previously, in order to require compliance with these inspection intervals and life limits, the FAA must engage in rulemaking, namely, the issuance of an AD. For products certificated to comply with the referenced part 25 requirements, it is within the authority of the FAA to issue an AD requiring a revision to the Airworthiness Limitations Section that includes reduced life limits, or new or different structural inspection requirements. These revisions then are mandatory for operators under FAR section 91.403(c), which prohibits operation of an airplane for which airworthiness limitations have been issued unless the inspection intervals specified in those limitations have been complied with.

Once that document is revised, as required, and the AD has been fully complied with, the life limit or structural inspection change remains enforceable as a part of the Airworthiness Limitations. (This is analogous to AD's that require changes to the limitations section of the Airplane Flight Manual.)

Requiring a revision of the Airworthiness Limitations, rather than requiring individual inspections, is advantageous for operators because it allows them to record AD compliance status only once—at the time they make the revision—rather than after every inspection. It also has the advantage of keeping all Airworthiness Limitations, whether imposed by original certification or by AD, in one place within the operator's maintenance program, thereby reducing the risk of non-compliance because of oversight or confusion.

Determination of Grace Period

This proposed AD allows operators up to three years after the effective date of this AD to accomplish the ALI revision required by this AD. This period provides operators of airplanes that are approaching or have already reached the 25,000-flight-cycle inspection threshold with a reasonable amount of time to plan and perform the inspections. The FAA notes that only a few PSE's in the ALI have an initial inspection threshold of 25,000 total flight cycles. The majority of PSE's in the ALI have an initial inspection threshold that corresponds to the design service objective of the affected airplane (i.e., 50,000 total flight cycles for passenger airplanes). In addition, the Model 767 Structures Working Group, whose membership is composed of many of the major operators worldwide and almost all U.S. operators, has been aware of the specific contents and requirements of this ALI revision since August 1996. These facts have led the FAA to determine that three years is an appropriate and reasonable grace period for operators to perform the earliest PSE inspections.

Cost Impact

There are approximately 660 Boeing Model 767 series airplanes (excluding Model 767–300F freighters) of the affected design in the worldwide fleet. The FAA estimates that 250 airplanes of U.S. registry would be affected by this proposed AD, that it would take approximately 1 work hour per airplane to accomplish the proposed actions, and that the average labor rate is $60 per work hour. Based on these figures, the cost impact of the proposed AD on U.S. operators is estimated to be $15,000, or $60 per airplane.

The cost impact figure discussed above is based on assumptions that no operator has yet accomplished any of the proposed requirements of this AD action, and that no operator would accomplish those actions in the future if this AD were not adopted.

Although this proposed AD requires only a revision to the current ALI, the FAA recognizes that the inspections contained in the ALI would then be required by parts 43 and 91 of the FAR. The FAA estimates that it would take approximately 1,000 work hours to accomplish all of the ALI inspections. At an average labor rate of $60 per work hour, the cost to perform the ALI inspections (required by FAR parts 43 and 91, rather than by part 39) would be approximately $60,000 per airplane. The FAA notes that the majority of work hours needed to perform the inspections would be expended when an affected airplane reached the 50,000 flight-cycle-threshold. Based upon current airplane utilization, the FAA estimates that no airplane would reach this threshold for at least 10 years.

Regulatory Impact

The regulations proposed herein would not have substantial direct effects on the States, on the relationship between the national government and the States, or on the distribution of power and responsibilities among the various levels of government.

Therefore, in accordance with Executive Order 12612, it is determined that this proposal would not have sufficient federalism implications to warrant the preparation of a Federalism Assessment.

For the reasons discussed above, I certify that this proposed regulation (1) is not a ''significant regulatory action'' under Executive Order 12866; (2) is not a ''significant rule'' under the DOT Regulatory Policies and Procedures (44 FR 11034, February 26, 1979); and (3) if promulgated, will not have a significant economic impact, positive or negative, on a substantial number of small entities under the criteria of the Regulatory Flexibility Act. A copy of the draft regulatory evaluation prepared for this action is contained in the Rules Docket. A copy of it may be obtained by contacting the Rules Docket at the location provided under the caption **ADDRESSES**.

List of Subjects in 14 CFR Part 39

Air transportation, Aircraft, Aviation safety, Safety.

The Proposed Amendment

Accordingly, pursuant to the authority delegated to me by the Administrator, the Federal Aviation Administration proposes to amend part 39 of the Federal Aviation Regulations (14 CFR part 39) as follows:

PART 39—AIRWORTHINESS DIRECTIVES

1. The authority citation for part 39 continues to read as follows:

Authority: 49 U.S.C. 106(g), 40113, 44701.

§ 39.13 [Amended]

2. Section 39.13 is amended by adding the following new airworthiness directive:

Boeing: Docket 97–NM–276–AD.

Applicability: Model 767–200 and –300 series airplanes having line numbers 1 through 669 inclusive, certificated in any category.

Note 1: This AD applies to each airplane identified in the preceding applicability provision, regardless of whether it has been modified, altered, or repaired in the area subject to the requirements of this AD. For airplanes that have been modified, altered, or repaired so that the performance of the requirements of this AD is affected, the owner/operator must request approval for an alternative method of compliance in accordance with paragraph (c) of this AD. The request should include an assessment of the effect of the modification, alteration, or repair on the unsafe condition addressed by this AD; and, if the unsafe condition has not been eliminated, the request should include specific proposed actions to address it.

Compliance: Required as indicated, unless accomplished previously.

To ensure continued structural integrity of these airplanes, accomplish the following:

(a) Within 3 years after the effective date of this AD, revise Section 9 of the Model 767 Maintenance Planning Data (MPD) Document entitled ''Airworthiness Limitations and Certification Maintenance Requirements (CMR's)'' to incorporate Chapter B. of Boeing Document D622T001–9, Revision ''JUNE 1997.''

Note 2: The referenced Chapter B contains a requirement that cracks found during the specified inspections be reported to the Seattle Aircraft Certification Office. Information collection requirements contained in this regulation have been approved by the Office of Management and Budget under the provisions of the Paperwork Reduction Act of 1980 (44 U.S.C. 3501, *et seq.*) and have been assigned OMB Control Number 2120–0056.

(b) Except as provided in paragraph (c) of this AD: After the actions required by paragraph (a) of this AD have been accomplished, no alternative inspections or inspection intervals shall be approved for the PSE's contained in Boeing Document D622T001–9, Revision ''JUNE 1997.''

(c) An alternative method of compliance or adjustment of the compliance time that provides an acceptable level of safety may be used if approved by the Manager, Seattle Aircraft Certification Office (ACO), FAA, Transport Airplane Directorate. Operators shall submit their requests through an appropriate FAA Principal Maintenance Inspector, who may add comments and then send it to the Manager, Seattle ACO.

Note 3: Information concerning the existence of approved alternative methods of compliance with this AD, if any, may be obtained from the Seattle ACO.

(d) Special flight permits may be issued in accordance with sections 21.197 and 21.199 of the Federal Aviation Regulations (14 CFR 21.197 and 21.199) to operate the airplane to a location where the requirements of this AD can be accomplished.

Issued in Renton, Washington, on January 21, 1999.

Darrell M. Pederson,

Acting Manager, Transport Airplane Directorate, Aircraft Certification Service.

[FR Doc. 99–1977 Filed 1–27–99; 8:45 am]

BILLING CODE 4910–13–U

DEPARTMENT OF THE TREASURY

Internal Revenue Service

26 CFR Part 1

[REG–104924–98]

RIN 1545–AW06

Mark-to-Market Accounting for Dealers in Commodities and Traders in Securities or Commodities

AGENCY: Internal Revenue Service (IRS), Treasury.

ACTION: Notice of proposed rulemaking and notice of public hearing.

SUMMARY: This document contains proposed regulations for dealers in commodities and traders in securities or commodities regarding the election to use the mark-to-market method of accounting for their businesses. Section 1001(b) of the Taxpayer Relief Act of 1997 amended the applicable tax law for these taxpayers. This document also contains proposed regulations providing guidance on statutory changes to section 475 contained in the Internal Revenue Service Restructuring and Reform Act of 1998 (IRS Restructuring Act). This guidance is necessary because section 7003 of the IRS Restructuring Act generally prohibited the application of mark-to-market accounting to nonfinancial customer paper. Among other things, the proposed regulations provide guidance to taxpayers who are using mark-to-market accounting for nonfinancial customer paper. This document also provides notice of a public hearing on these proposed regulations.

DATES: Written comments and outlines of topics to be discussed at the public hearing scheduled for June 3, 1999, at 10 a.m. must be received by May 13, 1999.

ADDRESSES: Send submissions to CC:DOM:CORP:R (REG–104924–98), room 5226, Internal Revenue Service, POB 7604, Ben Franklin Station, Washington, DC 20044. Submissions may be hand delivered Monday through Friday between the hours of 8 a.m. and 5 p.m. to: CC:DOM:CORP:R (REG–104924–98), Courier's Desk, Internal Revenue Service, 1111 Constitution Avenue, NW., Washington, DC. Alternatively, taxpayers may submit comments electronically via the Internet by selecting the ''Tax Regs'' option on the IRS Home Page, or by submitting comments directly to the IRS Internet site at http://www.irs.ustreas.gov/prod/tax—regs/comments.html. The public hearing will be held in room 2615, Internal Revenue Building, 1111 Constitution Avenue, NW., Washington, DC.

FOR FURTHER INFORMATION CONTACT: Concerning the regulations about elections by commodities dealers and securities and commodities traders, Jo Lynn Ricks, 202–622–3920; concerning the regulations about nonfinancial customer paper, Pamela Lew, 202-622–3950; concerning submissions and the hearing, Michael L. Slaughter, Jr., 202–622–7190 (not toll-free numbers).

SUPPLEMENTARY INFORMATION:

Paperwork Reduction Act

The collection of information contained in this notice of proposed rulemaking has been submitted to the Office of Management and Budget for review in accordance with the Paperwork Reduction Act of 1995 (44 U.S.C. 3507(d)). Comments on the collection of information should be sent to the Office of Management and Budget, Attn: Desk Officer for the Department of Treasury, Office of Information and Regulatory Affairs, Washington, DC, 20503, with copies to the Internal Revenue Service, Attn: IRS Reports Clearance Officer, OP:FS:FP, Washington, DC 20224. Comments concerning the collection of information must be received by March 29, 1999.

The first collection of information in this proposed regulation is described in the Explanation of Provisions section of this document (rather than being included in the text of the proposed regulations). That description indicates that the elections under section 475(e)(1) and (f)(1) and (2) may be required to be made on a form to be

developed by the IRS. This burden will be reflected on that new form.

The second collection of information in this proposed regulation is in §§ 1.475(e)–1 and 1.475(f)–2. The information required to be recorded under §§ 1.475(e)–1 and 1.475(f)–2 is required by the IRS to determine whether an exemption from mark-to-market accounting is properly claimed. This information will be used to make that determination upon audit of taxpayers' books and records. The likely recordkeepers are businesses or other for-profit institutions. Estimated total annual recordkeeping burden: 1,000 hours. The estimated annual burden per recordkeeper varies from 15 minutes to 3 hours, depending on individual circumstances, with an estimated average of 1 hour. Estimated number of recordkeepers: 1,000.

An agency may not conduct or sponsor, and a person is not required to respond to, a collection of information unless it displays a valid control number assigned by the Office of Management and Budget.

Books or records relating to a collection of information must be retained as long as their contents may become material in the administration of any internal revenue law. Generally, tax returns and tax return information are confidential, as required by 26 U.S.C. 6103.

Background

Section 475 provides that dealers in securities generally must use mark-to-market accounting for all securities. Exceptions from the mark-to-market requirement are generally provided for securities not held for sale to customers and certain securities held as a hedge, provided that the securities are identified as exempt in a proper and timely manner.

For purposes of section 475, a security includes any note, bond, debenture, or other evidence of indebtedness. Revenue Ruling 97–37 (1997–39 I.R.B. 4), clarified that ''other evidence of indebtedness'' includes customer paper, commonly referred to as trade accounts receivable. The IRS provided procedures for a taxpayer to change its method of accounting for customer paper in Revenue Procedure 97–43 (1997–39 I.R.B. 12).

The IRS Restructuring Act modified the definition of security for purposes of section 475 to exclude nonfinancial customer paper. For this purpose, nonfinancial customer paper is any receivable arising out of the sale of nonfinancial goods or services by a person the principal activity of which is the selling or providing of nonfinancial goods or services if the receivable is held by that person (or a related person) at all times since its issuance. Section 475(c)(4), added by the IRS Restructuring Act, precludes a taxpayer from using mark-to-market accounting under section 475 for nonfinancial customer paper. In addition, the legislative history of the IRS Restructuring Act indicates that taxpayers may not account for nonfinancial customer paper using a mark-to-market or lower-of-cost-or-market method of accounting under other sections of the Code. See H.R. Conf. Rep. No. 599, 105th Cong., 2d Sess. 353–54 (1998). Congress, however, authorized the Secretary to issue regulations describing situations where taxpayers must use mark-to-market accounting for nonfinancial customer paper in order to prevent taxpayers from using the exclusion in section 475(c)(4) to avoid marking to market receivables that are inventory in the hands of the taxpayer or a related person.

Section 475(e) and (f), added by section 1001(b) of the Taxpayer Relief Act of 1997, allows securities traders and commodities traders and dealers to elect mark-to-market accounting similar to that currently required for securities dealers. These provisions are effective for all taxable years ending after August 5, 1997, the date of enactment of the Taxpayer Relief Act. The proposed regulations clarify several issues relating to these elections, including the identification of securities and commodities as exempt from mark-to-market accounting, the character of marked securities and commodities, and the time and manner for making the elections.

Explanation of Provisions

Nonfinancial Customer Paper

Sections 1.446–1(c)(2)(iii), 1.471–12, and 1.475(c)–2(d) of the proposed regulations provide that taxpayers may not use mark-to-market or lower-of-cost-or-market accounting for any nonfinancial customer paper unless a regulation affirmatively provides that the nonfinancial customer paper is to be marked to market as inventory.

The remaining proposed regulations pertaining to section 475(c)(4) are cross references or minor technical changes required by the addition of § 1.475(c)–2(d).

Dealers in Commodities

The proposed regulations generally provide that, except as provided in guidance prescribed by the Commissioner, the rules for mark-to-market accounting for securities dealers apply to commodities dealers that make an election under section 475(e)(1) (electing commodities dealers). Comments are requested whether there are circumstances where the specific rules applicable to securities dealers should not be applied to electing commodities dealers.

Under the proposed regulations, unless the Commissioner otherwise provides in a revenue ruling, revenue procedure, or letter ruling, the exemption from mark-to-market accounting for assets held for investment does not apply to a commodity derivative held by an electing dealer in commodities. If the rule described in the preceding sentence applies (and consequently requires a commodity derivative to be marked to market), the gain or loss is ordinary. The IRS and the Treasury Department believe that it would be extremely rare for a commodity derivative held by a commodities derivative dealer to be acquired other than in a dealer capacity. See § 1.475(c)–1(a)(2). Moreover, the IRS and the Treasury Department believe that a dealer in physical commodities generally engages in derivatives activities that are virtually indistinguishable from its dealings in physical commodities. This situation invokes many of the practical concerns that led Congress to enact section 475(b)(4). The IRS and the Treasury Department welcome comments on whether, and under what circumstances, it may be appropriate for a dealer in physical commodities to identify commodity derivatives as held for investment.

The proposed regulations also provide that, in all cases, if a dealer in commodities identifies a commodity as exempt from mark-to-market accounting under section 475(b)(2), the identification is ineffective unless it is made before the close of the day on which the commodity was acquired, originated, or entered into. Thus, a rule similar to the 30-day identification rule for certain securities in Holding 8 of Rev. Rul. 97–39 (1997–39 I.R.B. 4), does not apply to commodities dealers.

Traders in Securities or Commodities

The proposed regulations provide that the principles underlying the rules and administrative interpretations applicable to securities dealers also apply to electing traders, unless the proposed regulations or the Commissioner provides otherwise. The IRS and the Treasury Department request comments on whether there are circumstances under which a specific rule applicable to securities dealers

should not apply to electing securities traders.

The proposed regulations provide rules for the identification of investment securities as exempt from mark-to-market accounting. The proposed regulations clarify that a trader in securities who elects mark-to-market accounting under section 475(f)(1) for its trading business (an electing trader) must identify, in accordance with section 475(f)(1)(B)(ii), any security held other than in connection with the trading business.

If the electing trader is also a dealer in securities, the trader need only identify under section 475(f)(1)(B)(ii) securities that are not held in connection with the trading business and that are also described in section 475(b)(1) (without regard to section 475(b)(2)). That is, the trader need not identify securities that could not properly be identified as being exempt from section 475(a).

The IRS and the Treasury Department believe that in making the section 475 election available to securities traders, Congress did not want taxpayers selectively to mark to market some securities but selectively to identify other securities as exempt from this treatment. Congress addressed this concern by establishing a higher burden of proof for electing securities traders to identify securities as not subject to section 475 than is applicable to securities dealers. The IRS and the Treasury Department share this concern, particularly because it traditionally has been easier to distinguish investment securities from dealer securities than to distinguish investment securities from trading securities. Accordingly, the proposed regulations provide that in no event is the requirement of section 475(f)(1)(B)(i) satisfied unless the electing trader demonstrates by clear and convincing evidence that a security has no connection to its trading activities. The IRS and Treasury Department request comments on whether any trader of securities could meet this burden and under what circumstances.

In addition, the IRS and the Treasury Department seek comments on the manner in which securities are identified as not held in connection with trading activities and, in particular, comments that focus on the administrability of rules in this area.

Because of the fungible nature of certain securities, the proposed regulations provide a special rule for identifying securities held other than in connection with the electing trader's trading business when the electing trader also trades other of the same or substantially similar securities. In this circumstance, the electing trader does not satisfy section 475(f)(1)(B)(i) unless the security is held in a separate, nontrading account maintained with a third party. The IRS and the Treasury Department are considering extending this special identification rule to all securities, rather than solely to those that are fungible, and request comments on the advisability of doing so.

Under the proposed regulations, all identifications under section 475(f)(1)(B)(ii) must be made on the same day the electing trader acquires, originates, or enters into the security. Thus, a rule similar to the 30-day identification rule for certain securities in Holding 8 of Rev. Rul. 97–39 does not apply to electing traders.

Because the principles of the rules and administrative interpretations applicable to securities dealers apply to electing traders, if an electing trader improperly identifies as exempt a security that is actually held in connection with that business, the gain or loss with respect to the security is ordinary, and the consequences described in section 475(d)(2) apply to the security (i.e., the security is marked to market and any losses realized with respect to the security prior to its disposition are recognized only to the extent of gain previously recognized with respect to the security). Similarly, under the proposed regulations, if an electing trader fails to identify a security that is not held in connection with its trading business, the consequences of section 475(d)(2) apply to the security, and the gain or loss with respect to the security is ordinary. Moreover, in the event of this failure, the Commissioner may nevertheless treat the security as if the requirements for exemption from mark-to-market accounting were satisfied.

The proposed regulations further provide that the gain or loss with respect to a security that is marked to market under section 475(f)(1)(A) is ordinary. Under this rule, if an electing trader disposes of a security before the close of the taxable year, proposed § 1.475(a)–2 applies, and the gain or loss is ordinary income or loss. See sections 475(f)(1)(D) and 475(d)(3) and the legislative history to section 475(f). H.R. Rep. No. 148, 105th Cong., 1st Sess. 445 (1997).

Under the proposed regulations, the above rules for electing securities traders also apply to electing commodities traders. In addition, the proposed regulations provide a special character rule for traders in section 1256 commodity contracts who elect mark-to-market accounting for their businesses. For these traders, the proposed regulations clarify that the capital character rule of section 1256 does not apply to these contracts and, thus, the gain or loss with respect to such contracts is ordinary.

Making the Elections

The proposed regulations clarify that if a dealer in securities also has a securities or commodities trading business or a commodities dealing business, the dealer may make an election for that business.

The proposed regulations also provide that the mark-to-market elections for dealers in commodities and for traders in securities or commodities must be made in the time and manner prescribed by the Commissioner. The IRS and the Treasury Department anticipate requiring taxpayers to make the election by filing a form, to be developed by the IRS, not later than 2½ months after the beginning of the taxable year for which the election is made. (See the Paperwork Reduction Act section of this preamble, which requests comments on the burden that may be imposed by this requirement.) Interim procedures are being provided in a revenue procedure.

Proposed Effective Dates

The proposed regulations in § 1.475(c)–2(d)(1) apply to every taxpayer who is required by section 475(c)(4) to cease using mark-to-market accounting for nonfinancial customer paper. These regulations are applicable for all taxable years ending after July 22, 1998. Proposed §§ 1.446–1(c)(2)(iii), 1.471–12, and 1.475(c)–2(d)(2) are applicable for all taxable years ending on or after January 28, 1999.

The proposed regulations in §§ 1.475(e)–1 and 1.475(f)–2 generally apply to securities or commodities acquired on or after March 1, 1999. The rules concerning the time and manner for making the mark-to-market elections for commodities dealers and securities and commodities traders are generally applicable for taxable years ending on or after January 28, 1999.

Special Analyses

It has been determined that this notice of proposed rulemaking is not a significant regulatory action as defined in EO 12866. Therefore, a regulatory impact analysis is not required. It is hereby certified that the collection of information in these regulations will not have a significant economic impact on a substantial number of small entities. As previously noted, in those instances where a small entity elects to apply the rules in these regulations, the burden of the collection of information is not

significant. Accordingly, a Regulatory Flexibility Analysis is not required. Pursuant to section 7805(f), this notice of proposed rulemaking will be submitted to the Chief Counsel for Advocacy of the Small Business Administration for comment on its impact on small business.

Comments and Public Hearing

Before these proposed regulations are adopted as final regulations, consideration will be given to any written comments (a signed original and eight (8) copies) that are submitted timely to the IRS. The IRS and the Treasury Department specifically request comments on the clarity of the proposed regulations and how they can be made easier to understand. All comments will be available for public inspection and copying.

A public hearing has been scheduled for June 3, 1999, beginning at 10 a.m. in room 2615 of the Internal Revenue Building, 1111 Constitution Avenue, NW., Washington, DC. Due to building security procedures, visitors must enter at the 10th Street entrance, located between Constitution and Pennsylvania Avenues, NW. In addition, all visitors must present photo identification to enter the building. Because of access restrictions, visitors will not be admitted beyond the immediate entrance area more than 15 minutes before the hearing starts. For information about having your name placed on the building access list to attend the hearing, see the **FOR FURTHER INFORMATION CONTACT** section of this preamble.

The rules of 26 CFR 601.601(a)(3) apply to the hearing. Persons who wish to present oral comments at the hearing must submit written comments and an outline of the topics to be discussed and the time to be devoted to each topic (signed original and eight (8) copies) by May 13, 1999. A period of 10 minutes will be allotted to each person for making comments. An agenda showing the scheduling of the speakers will be prepared after the deadline for receiving outlines has passed. Copies of the agenda will be available free of charge at the hearing.

Drafting information. The principal authors of these regulations are Jo Lynn Ricks and Pamela Lew of the Office of Assistant Chief Counsel (Financial Institutions & Products). However, other personnel from the IRS and the Treasury Department participated in their development.

List of Subjects in 26 CFR Part 1

Income taxes, Reporting and recordkeeping requirements.

Proposed Amendments to the Regulations

Accordingly, 26 CFR part 1 is proposed to be amended as follows:

PART 1—INCOME TAXES

Paragraph 1. The authority citation for part 1 is amended by removing the entries for §§ 1.475(a)–3 through 1.475(e)–1 and adding the following entries in numerical order to read as follows:

Authority: 26 U.S.C. 7805 * * *

Section 1.475(a)–3 also issued under 26 U.S.C. 475(g).

Section 1.475(b)–1 also issued under 26 U.S.C. 475(b)(4) and 26 U.S.C. 475(g).

Section 1.475(b)–2 also issued under 26 U.S.C. 475(b)(2) and 26 U.S.C. 475(g).

Section 1.475(b)–4 also issued under 26 U.S.C. 475(b)(2), 26 U.S.C. 475(g), and 26 U.S.C. 6001.

Section 1.475(c)–1 also issued under 26 U.S.C. 475(g).

Section 1.475(c)–2 also issued under 26 U.S.C. 475(g) and 26 U.S.C. 860G(e).

Section 1.475(d)–1 also issued under 26 U.S.C. 475(g).

Section 1.475(e)–1 also issued under 26 U.S.C. 475(g).

Section 1.475(f)–1 also issued under 26 U.S.C. 475(g).

Section 1.475(f)–2 also issued under 26 U.S.C. 475(g).* * *

Par. 2. In § 1.446–1, paragraph (c)(2)(iii) is added to read as follows:

§ 1.446–1 General rule for methods of accounting.

* * * * *

(c) * * *

(2) * * *

(iii) Section 475 is the exclusive authority on which a taxpayer may rely to use the mark-to-market method of accounting for nonfinancial customer paper, as defined in section 475(c)(4)(B). Thus, except to the extent provided in § 1.475(c)–2(d), the mark-to-market method of accounting is not a permissible method of accounting for nonfinancial customer paper. In addition, the lower-of-cost-or-market method of accounting is not a permissible method of accounting for these assets. See § 1.471–12. This paragraph (c)(2)(iii) applies to all tax years ending on or after January 28, 1999.

* * * * *

Par. 3. Section 1.471–12 is added as follows:

§ 1.471–12 Nonfinancial customer paper.

Nonfinancial customer paper, as defined in section 475(c)(4)(B), may not be treated as inventory except as provided in § 1.475(c)–2(d). This section applies to taxable years ending on or after January 28, 1999.

Par. 4. In § 1.475(c)–1, paragraphs (b)(3)(i) and (b)(4)(ii) are revised to read as follows:

§ 1.475(c)-1 Definitions—dealer in securities.

* * * * *

(b) * * *

(3) * * *

(i) For purposes of section 471, the taxpayer accounts for any security (as defined in section 475(c)) as inventory;

* * * * *

(4) * * *

(ii) *Continued applicability of an election.*—(A) *In general.* Except as provided in paragraph (b)(4)(ii)(B) of this section, an election under this paragraph (b)(4) continues in effect for subsequent taxable years until revoked. The election may be revoked only with the consent of the Commissioner.

(B) *Taxable years ending after July 22, 1998.* An election under this paragraph (b)(4) is ineffective for taxable years ending after July 22, 1998.

* * * * *

Par. 5. In § 1.475(c)–2, paragraph (d) is added to read as follows:

§ 1.475(c)–2 Definitions—security.

* * * * *

(d) *Inventory*—(1) *Nonfinancial customer paper is generally not marked to market under section 475.* Except as provided in paragraph (d)(3) of this section, nonfinancial customer paper (as defined in section 475(c)(4)(B)) is not a security even if it is inventory.

(2) *Treatment of nonfinancial customer paper under other sections of the Internal Revenue Code.* For nonfinancial customer paper that is not a security, the mark-to-market method of accounting and the lower-of-cost-or-market method of accounting are not permissible methods of accounting. See §§ 1.446–1(c)(2)(iii) and 1.471–12.

(3) *Nonfinancial customer paper treated as inventory.* [Reserved]

§ 1.475(e)–1 [Redesignated as § 1.475(g)–1]

Par. 6. Section 1.475(e)–1 is redesignated as § 1.475(g)–1.

Par. 7. New § 1.475(e)–1 and §§ 1.475(f)–1 and 1.475(f)–2 are added to read as follows:

§ 1.475(e)–1 Election of mark-to-market accounting for dealers in commodities.

(a) *Time and manner of making election.* An election under section 475(e)(1) must be made in the time and manner prescribed by the Commissioner.

(b) *Application of securities dealer rules to electing commodities dealers.* Except as otherwise provided in this

section or in other guidance prescribed by the Commissioner, the rules and administrative interpretations under section 475 for dealers in securities apply to dealers in commodities that make an election under section 475(e)(1).

(c) *Commodity derivatives deemed not held for investment*—(1) *In general.* Except as otherwise determined by the Commissioner in a revenue ruling, revenue procedure, or letter ruling, if a dealer in commodities that made an election under section 475(e)(1) holds a commodity described in section 475(e)(2)(B) or (C) (describing certain notional principal contracts and commodity derivatives), section 475(b)(1)(A) (exempting from mark-to-market accounting certain positions that are held for investment) does not apply to that commodity.

(2) *Character of commodity derivatives required to be marked to market.* If a commodity is required to be marked to market because of the application of paragraph (c)(1) of this section, the gain or loss with respect to that commodity is ordinary.

(d) *Same day identification.* An identification of a commodity as exempt from mark-to-market accounting under section 475(b)(2) is not effective unless it is made before the close of the day on which the commodity was acquired, originated, or entered into.

§ 1.475(f)–1 Procedures for electing mark-to-market accounting for traders.

(a) *Time and manner of making election.* An election under section 475(f)(1) or (2) must be made in the time and manner prescribed by the Commissioner.

(b) *Coordination with section 475(a).* If a dealer in securities also has a securities or commodities trading business or a commodities dealing business, the dealer may make an election under section 475(e)(1), (f)(1), or (f)(2) for that business.

§ 1.475(f)–2 Election of mark-to-market accounting for traders in securities or commodities.

(a) *Securities not held in connection with trading activities*—(1) *Taxpayer identification of investment securities.* If a trader in securities makes an election under section 475(f)(1)(A) (electing trader) and holds a security other than in connection with that trading business, the electing trader must identify that security in accordance with section 475(f)(1)(B)(ii). If the electing trader is also a dealer in securities, however, the preceding sentence applies only to securities described in section 475(b)(1) (without regard to section 475(b)(2)).

(2) *Satisfaction of Commissioner.* In no event is the requirement of section 475(f)(1)(B)(i) satisfied unless the electing trader demonstrates by clear and convincing evidence that a security has no connection to its trading activities.

(3) *Substantially similar securities held for trading and investment.* An electing trader that holds a security other than in connection with its trading business and also trades the same or substantially similar securities in no event satisfies the requirement of section 475(f)(1)(B)(i) unless the security is held in a separate, nontrading account maintained with a third party.

(4) *Consequences of failure to identify investment securities.* If an electing trader holds a security that is not held in connection with its trading business and fails to identify the security in a manner that satisfies the requirements of section 475(f)(1)(B)(ii)—

(i) The consequences described in section 475(d)(2) apply to the security; and

(ii) The character of the gain or loss with respect to the security is ordinary.

(5) *Commissioner identification of investment securities.* Notwithstanding paragraph (a)(4) of this section, the Commissioner may treat a security described in that paragraph as meeting the requirements of section 475(f)(1)(B)(i) and (ii).

(b) *Character of securities marked to market.* The gain or loss with respect to a security that is marked to market under section 475(f)(1)(A) is ordinary.

(c) *Application of securities dealer rules to electing traders.* Except as otherwise provided in this section or in other guidance prescribed by the Commissioner, the principles of the rules and administrative interpretations under section 475 for dealers in securities apply to traders in securities that make an election under section 475(f)(1).

(d) *Same day identification.* An identification of a security as exempt from mark-to-market accounting under section 475(f)(1)(B) is not effective unless it is made before the close of the day on which the security was acquired, originated, or entered into.

(e) *Application to traders in commodities*—(1) *General rule.* If a trader in commodities makes an election under section 475(f)(2), paragraphs (a), (b), (c), and (d) of this section apply to the trader in the same manner that they apply to a trader in securities who makes an election under section 475(f)(1).

(2) *Coordination with section 1256.* If a trader in commodities makes an election under section 475(f)(2) and trades section 1256 contracts that are commodities as defined in section 475(e)(2), then the rules of section 475(f) and paragraph (e)(1) of this section apply to those contracts, and not the capital character rules of section 1256.

Par. 8. Newly designated § 1.475(g)–1 is amended by revising paragraphs (h)(2) and (i) and adding paragraphs (k), (l), and (m) to read as follows:

§ 1.475(g)–1 Effective dates.

* * * * *

(h) * * *

(2) Section 1.475(c)–1(b) (concerning sellers of nonfinancial goods and services) applies as follows:

(i) Except as otherwise provided in this paragraph (h)(2), § 1.475(c)–1(b) applies to taxable years ending on or after December 31, 1993.

(ii) Section 1.475(c)–1(b)(4)(ii)(B) applies to taxable years ending after July 22, 1998.

* * * * *

(i) Section 1.475(c)–2 (concerning the definition of security) applies as follows:

(1) Section 1.475(c)–2(a), (b), and (c) (concerning the definition of security) applies to taxable years ending on or after December 31, 1993. By its terms, however, § 1.475(c)–2(a)(3) applies only to residual interests or to interests or arrangements acquired on or after January 4, 1995; and the integrated transactions that are referred to in § 1.475(c)–2(a)(2) and (b) exist only after August 13, 1996 (the effective date of § 1.1275–6).

(2) Section 1.475(c)–2(d) applies as follows:

(i) Section 1.475(c)–2(d)(1) applies to taxable years ending after July 22, 1998.

(ii) Section 1.475(c)–2(d)(2) applies to taxable years ending on or after January 28, 1999.

* * * * *

(k) Section 1.475(e)–1(a) (concerning the time and manner for making the mark-to-market election for dealers in commodities) applies to taxable years ending on or after January 28, 1999. Section 1.475(e)–1(b), (c) and (d) applies to commodities acquired on or after March 1, 1999.

(l) Section 1.475(f)–1 (procedures for electing mark-to-market accounting for traders in securities or commodities) applies to taxable years ending on or after January 28, 1999.

(m) Section 1.475(f)–2 (concerning the mark-to-market rules for traders in securities or commodities) applies to

securities or commodities acquired on or after March 1, 1999.

Robert E. Wenzel,

Deputy Commissioner of Internal Revenue.

[FR Doc. 99–1787 Filed 1–27–99; 8:45 am]

BILLING CODE 4830–01–U

ENVIRONMENTAL PROTECTION AGENCY

40 CFR Part 52

[TX–71–1–7311B; FRL–6222–2]

Approval and Promulgation of Air Quality Implementation Plans; Texas

AGENCY: Environmental Protection Agency (EPA).

ACTION: Proposed rule.

SUMMARY: This action proposes to approve the State Implementation Plan (SIP) revisions to 30 TAC Chapter 101, Section 101.2(b) concerning Multiple Air Contaminant Sources. The SIP revisions were submitted by the Governor to EPA on January 10, 1996. The approval of these Texas SIP revisions make the revisions federally enforceable.

In the Rules and Regulation section of this **Federal Register**, EPA is approving the State's SIP revision as a direct final rule without prior proposal because the agency views this as a noncontroversial revision and anticipates no adverse comments. The rationale for the approval is set forth in the direct final rule. If no adverse comments are received in response to this rule, no further activity is contemplated in relation to the rule. If EPA receives adverse comments, the direct final rule will be withdrawn, and all public comments received during the 30-day comment period set forth below will be addressed in a subsequent final rule based on this proposed rule. Any parties interested in commenting on this action should do so at this time.

DATES: Comments must be received in writing by March 29, 1999.

ADDRESSES: Written comments on this action should be addressed to Mr. Thomas Diggs, Chief, Air Planning Section (6PD–L), at the EPA Region 6 Office listed below. Copies of the documents relevant to this action are available for public inspection during normal business hours at the following locations. Anyone wanting to examine these documents should make an appointment with the appropriate office at least two working days in advance.

Environmental Protection Agency, Region 6, Air Planning Section (6PD–L), Multimedia Planning and Permitting Division, 1445 Ross Avenue, Suite 700, Dallas, Texas 75202–2733.

Texas Natural Resource Conservation Commission, Office of Air Quality, 12124 Park 35 Circle, Austin, Texas 78753.

FOR FURTHER INFORMATION CONTACT: Mr. Kenneth Boyce of the EPA Region 6 Air Planning Section at (214) 665–7259 at the address above.

SUPPLEMENTARY INFORMATION: For additional information, see the information provided in the direct final action of the same title which is published in the Rules and Regulations section of this **Federal Register**.

Authority: 42 U.S.C. 7401 *et seq.*

Dated: December 22, 1998.

Jerry Clifford,

Acting Regional Administrator, Region 6.

[FR Doc. 99–1913 Filed 1–27–99; 8:45 am]

BILLING CODE 6560–50–P

ENVIRONMENTAL PROTECTION AGENCY

40 CFR Part 63

[FRL–6222–8]

Approval of Section 112(l) Authority for Hazardous Air Pollutants; Perchloroethylene Air Emission Standards for Dry Cleaning Facilities; State of California; Yolo-Solano Air Quality Management District

AGENCY: Environmental Protection Agency (EPA).

ACTION: Proposed rule.

SUMMARY: Pursuant to section 112(l) of the Clean Air Act (CAA) and through the California Air Resources Board, Yolo-Solano Air Quality Management District (YSAQMD) requested approval to implement and enforce its ''Rule 9.7: Perchloroethylene Dry Cleaning Operations'' (Rule 9.7) in place of the ''National Perchloroethylene Air Emission Standards for Dry Cleaning Facilities'' (dry cleaning NESHAP) for area sources under YSAQMD's jurisdiction. In the Rules section of this **Federal Register**, EPA is granting YSAQMD the authority to implement and enforce Rule 9.7 in place of the dry cleaning NESHAP for area sources under YSAQMD's jurisdiction as a direct final rule without prior proposal because the Agency views this as a noncontroversial action and anticipates no adverse comments. A detailed rationale for this approval is set forth in the direct final rule. If no adverse comments are received, no further activity is contemplated. If EPA receives adverse comments, the direct final rule will be withdrawn and all public comments received will be addressed in a subsequent final rule based on this proposed rule. The EPA will not institute a second comment period. Any parties interested in commenting should do so at this time.

DATES: Written comments must be received by March 1, 1999.

ADDRESSES: Comments should be addressed to: Andrew Steckel, Rulemaking Office (AIR–4), Air Division, U.S. Environmental Protection Agency, Region IX, 75 Hawthorne Street, San Francisco, CA 94105–3901.

Copies of the submitted request are available for public inspection at EPA's Region IX office during normal business hours.

FOR FURTHER INFORMATION CONTACT: Mae Wang, Rulemaking Office (AIR–4), Air Division, U.S. Environmental Protection Agency, Region IX, 75 Hawthorne Street, San Francisco, CA 94105–3901, Telephone: (415) 744–1200.

SUPPLEMENTARY INFORMATION: This document concerns YSAQMD Rule 9.7, Perchloroethylene Dry Cleaning Operations, revised on November 13, 1998. For further information, please see the information provided in the direct final action which is located in the Rules section of this **Federal Register**.

Authority: This action is issued under the authority of Section 112 of the Clean Air Act, as amended, 42 U.S.C. Section 7412.

Dated: January 11, 1999.

Felicia Marcus,

Regional Administrator, Region IX.

[FR Doc. 99–1911 Filed 1–27–99; 8:45 am]

BILLING CODE 6560–50–M

ENVIRONMENTAL PROTECTION AGENCY

40 CFR Part 239

[FRL–6226–2]

RIN 2050–AD03

Subtitle D Regulated Facilities; State Permit Program Determination of Adequacy; State Implementation Rule—Amendments and Technical Corrections

AGENCY: Environmental Protection Agency.

ACTION: Proposed rule.

SUMMARY: The Environmental Protection Agency (EPA) is taking direct final action to modify the State Implementation Rule (''SIR rule''). This modification changes the withdrawal of state permit programs provision in § 239.13 of the SIR rule so that Agency

withdrawals of an approved state municipal solid waste landfill (MSWLF) or conditionally exempt small quantity generator (CESQG) permit program would only apply to the entire approved program.

The SIR, which was published on October 23, 1998, set forth a flexible framework for modifications of approved programs, established procedures for withdrawal of approvals (including withdrawal of a part or parts of a state program), and confirmed the process for future program approvals so that standards that safeguard human health and the environment are maintained (63 FR 57026). Withdrawal of a part or parts of a state program will no longer apply.

EPA is also making some technical corrections to the withdrawal provision of the SIR rule.

Elsewhere in the Final Rule Section of today's **Federal Register**, EPA is taking direct final action to modify the SIR rule. This direct final rule will make these amendments and technical corrections effective in sixty (60) days unless relevant adverse comment is received on this rule within thirty (30) days. We are taking this direct final action because we view this amendment and the corrections to the SIR rule as being non-controversial. Thus, we anticipate no adverse comments. A detailed rationale for the changes to the withdrawal provisions of the SIR rule are provided in the preamble to the direct final rule.

If no relevant adverse comment is received in response to this rule, no further activity is contemplated regarding this proposal. If EPA receives relevant adverse comment, EPA will withdraw the direct final rule and address comments in a subsequent final rule. EPA will not provide additional opportunities for comment. If we receive relevant adverse comment, we will publish a timely withdrawal in the **Federal Register** informing the public that this rule will not take effect. If we receive relevant adverse comment on any amendment, paragraph, or section of this rule, only those amendments, paragraphs, or sections of the rule will be withdrawn; all other amendments, paragraphs, and sections of the direct final rule will go into effect within the time frame specified in that direct final rule notice (sixty (60) days).

DATES: Comments must be submitted on or before March 1, 1999.

ADDRESSES: Commenters must send an original and two copies of their comments referencing the docket identification number F–1999–ST2F–FFFFF to the RCRA Information Center (RIC), Office of Solid Waste (5305G), U.S. Environmental Protection Agency, 401 M Street, SW, Washington, DC 20460. Hand deliveries of comments should be made to the RIC at Crystal Gateway I, First Floor, 1235 Jefferson Davis Highway, Arlington, VA. Comments may also be submitted electronically by sending electronic mail through the Internet to: rcra-docket@epamail.epa.gov. Comments in electronic format should also be identified by the docket number F–1999–ST2F–FFFFF. All electronic comments must be submitted as an ASCII file avoiding the use of special characters and any form of encryption.

Commenters should not submit electronically any confidential business information (CBI). An original and two copies of CBI must be submitted under separate cover to: RCRA CBI Document Control Officer, Office of Solid Waste (5305W), U.S. EPA, 401 M Street, SW, Washington, DC 20460.

The RIC is open from 9 a.m. to 4 p.m., Monday through Friday, excluding federal holidays. To review docket materials, it is recommended that the public make an appointment by calling 703–603–9230. The public may copy a maximum of 100 pages from any regulatory docket at no charge. Additional copies cost $0.15 per page.

FOR FURTHER INFORMATION CONTACT: For general information contact the RCRA Hotline, Office of Solid Waste, U.S. Environmental Protection Agency, 401 M Street SW, Washington, DC 20460; 800–424–9346; TDD 800–553–7672 (hearing impaired); in the Washington, DC metropolitan area, the number is 703–412–9810; TDD 703–486–3323.

For more detailed information on specific aspects of this rulemaking, contact Karen Rudek, Office of Solid Waste (5306W), U.S. Environmental Protection Agency Headquarters, 401 M Street SW, Washington, DC 20460; 703–308–1682, rudek.karen@epamail.epa.gov.

SUPPLEMENTARY INFORMATION:

I. Authority

The U.S. Environmental Protection Agency (EPA or the Agency) is proposing these amendments to the SIR rule under the authority of sections 2002(a)(1) and 4005(c) of the Resource Conservation and Recovery Act of 1976 (RCRA or the Act), as amended by the Hazardous and Solid Waste Amendments of 1984.

Subtitle D of RCRA, at section 4005(c)(1)(B), requires each state to develop and implement a permit program or other system of prior approval to ensure that facilities that receive household hazardous waste or conditionally exempt small quantity generator (CESQG) hazardous waste are in compliance with the federal revised criteria promulgated under section 4010(c) of Subtitle D of RCRA. Section 4005(c)(1)(C) further directs EPA to determine whether state permit programs are adequate to ensure compliance with the revised federal criteria. Section 2002(a)(1) of RCRA authorizes EPA to promulgate regulations necessary to carry out its functions under the Act.

II. Regulated Entities

Regulated entities include state governments requesting full or partial approvals of permit programs or other systems of prior approval, or revisions to existing fully or partially approved programs.

III. Background

The background of the RCRA Subtitle D federal revised criteria and the SIR rule are set forth elsewhere in the Final Rule Section of today's **Federal Register**. This proposed rule incorporates that background and historical information.

IV. Proposed Changes to the SIR Rule

A. Partial Withdrawal of State Permit Programs

EPA is proposing to amend the SIR rule so that section 239.13, which pertains to the withdrawal of state permit programs, would only apply to the entire approved program and not to part or parts of a state program. The reasons for this change are set forth in the preamble of the direct final rule published elsewhere in the Final Rules Section of today's **Federal Register**. Those reasons are hereby incorporated into this proposed rule.

B. Technical Corrections

In addition to this amendment to the SIR rule, we are proposing two technical corrections to errors which the Agency discovered in the language of § 239.13. First, in § 239.13(g)(3), both the proposed and final rule had stated that the Regional Administrator would hold a public hearing on a tentative withdrawal determination if such a hearing would ''clarify issues involved in the tentative adequacy determination'' (63 FR 57044, Oct. 23, 1998; 61 FR 2605, Jan. 26, 1996). As reflected in both the title of this section of the SIR rule (''Criteria and procedures for withdrawal of determination of adequacy'') and in the preamble to the proposed rule (61 FR 2509), it is clear that the Agency intended this language in § 239.13(g)(3) to allow the Regional

Administrator to hold a public hearing to clarify issues involved in the tentative ''withdrawal'' determination and not the tentative ''adequacy'' determination. The Agency is proposing to modify the SIR rule to reflect this intention.

Second, in the first sentence of both § 239.13(f) and (g), we propose inserting the word ''the'' in the phrase ''withdrawal of determination of adequacy'' to read ''withdrawal of the determination of adequacy.'' We believe that these corrections will merely clarify the language without altering the intent of the two provisions.

V. Regulatory Assessments

A. Executive Order 12866: Assessment of Potential Costs and Benefits

Under Executive Order 12866 (58 FR 51735, October 4, 1993), the Agency must determine whether any proposed or final regulatory action is ''significant,'' and, therefore, subject to OMB review and the requirements of the Executive Order. The order defines ''significant regulatory action'' as one that is likely to result in a rule that may:

(a) Have an annual effect on the economy of $100 million or more, or adversely affect in a material way the economy, a sector of the economy, productivity, competition, jobs, the environment, public health or safety, or state, local, or tribal governments or communities;

(b) Create a serious inconsistency or otherwise interfere with an action taken or planned by another agency;

(c) Materially alter the budgetary impact of entitlements, grants, user fees, or loan programs, or the rights and obligations of recipients thereof; or

(d) Raise novel legal or policy issues arising out of legal mandates, the President's priorities, or the principles set forth in the Executive Order.

It has been determined that this proposed rule is not a ''significant regulatory action.'' Thus, EPA has not submitted this action to OMB for review under E.O. 12866.

B. Regulatory Flexibility Act

Pursuant to the Regulatory Flexibility Act (5 U.S.C. 601 *et seq.*, as amended by the Small Business Regulatory Enforcement Fairness Act (SBREFA) of 1996) whenever an agency is required to publish a notice of rulemaking for any proposed or final rule, it must prepare and make available for public comment a regulatory flexibility analysis that describes the effect of the rule on small entities (i.e., small businesses, small organizations, and small governmental jurisdictions). However, no regulatory flexibility analysis is required if the head of an agency certifies the rule will not have a significant adverse economic impact on a substantial number of small entities.

SBREFA amended the Regulatory Flexibility Act to require Federal agencies to provide a statement of the factual basis for certifying that a rule will not have a significant economic impact on a substantial number of small entities. The following discussion explains EPA's determination.

The Agency has determined that today's proposed rule will not have a significant economic impact on a substantial number of small entities, since the rule has direct effects only on state agencies. Therefore, no regulatory flexibility analysis has been prepared. Based on the foregoing discussion, I hereby certify that this proposed rule will not have a significant adverse economic impact on a substantial number of small entities.

C. Unfunded Mandates Reform Act

Title II of the Unfunded Mandates Reform Act of 1995 (''UMRA''), Pub. L. 104–4, establishes requirements for federal agencies to assess the effects of their regulatory actions on state, local, and tribal governments and the private sector. Under ''202 of the UMRA, EPA generally must prepare a written statement, including a cost-benefit analysis, for proposed and final rules with ''federal mandates'' that may result in expenditures to state, local, and tribal governments, in the aggregate, or to the private sector, of $100 million or more in any one year. Before promulgating an EPA rule for which a written statement is needed, ''205 of UMRA generally requires EPA to identify and consider a reasonable number of regulatory alternatives and adopt the least costly, most cost-effective, or least burdensome alternative that achieves the objectives of the rule. The provisions of UMRA ''205 do not apply when they are inconsistent with applicable law. Moreover, UMRA ''205 allows EPA to adopt an alternative other than the least costly, most cost-effective or least burdensome alternative, if the Administrator publishes with the final rule an explanation of why that alternative was not adopted. Before EPA establishes any regulatory requirements that may significantly or uniquely affect small governments, including tribal governments, it must have developed, under ''203 of UMRA, a small government agency plan. The plan must provide for notifying potentially affected small governments, enabling officials of affected small governments to have meaningful and timely input in the development of EPA regulatory proposals with significant federal intergovernmental mandates, and informing, educating, and advising small governments on compliance with the regulatory requirements.

EPA has determined that this proposed rule does not contain a federal mandate (under the regulatory provisions of Title II of the UMRA) that may result in expenditures of $100 million or more for state and local governments in the aggregate, or for the private sector in any one year. Thus, there is no obligation to prepare a written statement, including a cost-benefit analysis, under ''202 of UMRA. For the same reasons outlined in part V.B above, EPA has determined that this proposed rule to amend the SIR rule will not significantly or uniquely affect small governments (UMRA ''203).

D. Paperwork Reduction Act

Today's proposed rule does not add new burden as defined by the Paperwork Reduction Act, 44 U.S.C. 3501 *et seq.* The Office of Management and Budget has previously approved the information collection in the existing regulations and has assigned OMB control number 2050–0152, (EPA ICR No. 1608.01).

E. Executive Order 13045: Protection of Children From Environmental Health Risks and Safety Risks

Executive Order 13045: ''Protection of Children from Environmental Health Risks and Safety Risks'' (62 FR 19885, April 23, 1997) applies to any rule that: (1) is determined to be ''economically significant'' as defined under E.O. 12866, and (2) concerns an environmental health or safety risk that EPA has reason to believe may have a disproportionate effect on children. If the regulatory action meets both criteria, the Agency must evaluate the environmental health or safety effects of the planned rule on children, and explain why the planned regulation is preferable to other potentially effective and reasonably feasible alternatives considered by the Agency. This proposed rule is not subject to E.O. 13045 because it is not an economically significant rule as defined by E.O. 12866.

F. National Technology Transfer and Advancement Act

Section 12(d) of the National Technology Transfer and Advancement Act of 1995 (''NTTAA''), Pub L. No. 104–113, § 12(d) (15 U.S.C. 272 note) directs EPA to use voluntary consensus standards in its regulatory activities unless to do so would be inconsistent

with applicable law or otherwise impractical. Voluntary consensus standards are technical standards (e.g., materials specifications, test methods, sampling procedures, and business practices) that are developed or adopted by voluntary consensus standards bodies. The NTTAA directs EPA to provide Congress, through OMB, explanations when the Agency decides not to use available and applicable voluntary consensus standards.

This action does not involve technical standards. Therefore, EPA did not consider the use of any voluntary consensus standards.

G. Executive Order 12898: Environmental Justice

Under Executive Order 12898, ''Federal Actions to Address Environmental Justice in Minority Populations and Low-Income Populations,'' as well as through EPA's April 1995, ''Environmental Justice Strategy, OSWER Environmental Justice Task Force Action Agenda Report,'' and National Environmental Justice Advisory Council, EPA has undertaken to incorporate environmental justice into its policies and programs. EPA is committed to addressing environmental justice concerns and is assuming a leadership role in environmental justice initiatives to enhance environmental quality for all residents of the United States. The Agency's goals are to ensure that no segment of the population, regardless of race, color, national origin, or income bears disproportionately high and adverse human health and environmental effects as a result of EPA's policies, programs, and activities, and all people live in clean and sustainable communities. To address this goal, EPA considered the impacts of the final State Implementation Rule on low-income populations and minority populations and concluded that the SIR will potentially advance environmental justice causes (63 FR 57039, Oct. 23, 1998). Today's proposed amendments to the SIR will not affect these beneficial impacts on environmental justice causes.

H. Executive Order 12875: Enhancing the Intergovernmental Partnership

Under Executive Order 12875, EPA may not issue a regulation that is not required by statute and that creates a mandate upon a state, local or tribal government, unless the Federal government provides the funds necessary to pay the direct compliance costs incurred by those governments. If the mandate is unfunded, EPA must provide to the Office of Management and Budget a description of the extent of EPA's prior consultation with representatives of affected State, local and tribal governments, the nature of their concerns, copies of any written communications from the governments, and a statement supporting the need to issue the regulation. In addition, Executive Order 12875 requires EPA to develop an effective process permitting elected officials and other representatives of state, local and tribal governments ''to provide meaningful and timely input in the development of regulatory proposals containing significant unfunded mandates.''

In developing this proposed rule, EPA consulted with various states and a state organization to enable them to provide meaningful and timely input in the development of this rule. EPA also worked closely with state governments in the development of the final SIR (63 FR 57039, Oct. 23, 1998).

Through notice, EPA sought input from small governments during the SIR rulemaking process. However, today's proposed rule to amend the SIR will not create a mandate on State, local or tribal governments. The proposed rule would not impose any enforceable duties on these entities. Accordingly, the requirements of section 1(a) of Executive Order 12875 do not apply to this proposed rule.

I. Executive Order 13084: Consultation and Coordination With Indian Tribal Governments

Under Executive Order 13084, EPA may not issue a regulation that is not required by statute, that significantly or uniquely affects the communities of Indian tribal governments, and that imposes substantial direct compliance costs on those communities, unless the Federal government provides the funds necessary to pay the direct compliance costs incurred by the tribal governments. If the mandate is unfunded, EPA must provide to the Office of Management and Budget, in a separately identified section of the preamble to the rule, a description of the extent of EPA's prior consultation with representatives of affected tribal governments, a summary of the nature of their concerns, and a statement supporting the need to issue the regulation. In addition, Executive Order 13084 requires EPA to develop an effective process permitting elected and other representatives of Indian tribal governments ''to provide meaningful and timely input in the development of regulatory policies on matters that significantly or uniquely affect their communities.''

Today's proposed rule does not significantly or uniquely affect the communities of Indian tribal governments. There is no impact on these communities. Accordingly, the requirements of section 3(b) of Executive Order 13084 do not apply to this proposed rule.

List of Subjects in 40 CFR Part 239

Environmental protection, Administrative practice and procedure, Municipal solid waste landfills, Non-municipal solid waste, Non-hazardous solid waste, State permit program approval, Adequacy.

Dated: January 19, 1999.

Carol M. Browner,

Administrator.

[FR Doc. 99–1907 Filed 1–27–99; 8:45 am]

BILLING CODE 6560–50–P

DEPARTMENT OF TRANSPORTATION

Maritime Administration

46 CFR Part 381

[Docket No. MARAD–99–5038]

RIN 2133–AB37

Regulations To Be Followed by All Departments and Agencies Having Responsibility To Provide a Preference for U.S.-Flag Vessels in the Shipment of Cargoes on Ocean Vessels

AGENCY: Maritime Administration, Department of Transportation.

ACTION: Advance notice of proposed rulemaking.

SUMMARY: The Maritime Administration (MARAD) is soliciting public comment concerning whether MARAD should amend its cargo preference regulations governing the carriage of agricultural exports. Your comment is welcome on the questions listed below or on any aspect of MARAD's oversight of other governmental agencies' ocean shipping activities under the Cargo Preference Act of 1954, as amended by the Food Security Act of 1985. Such comments will be considered in any future decision by MARAD to initiate a rulemaking process applicable to the carriage of agricultural export cargoes. Present regulations and policies remain in force. This docket does not address the carriage of military cargoes.

DATES: You should submit your comments early enough to ensure that Docket Management receives them not later than March 29, 1999.

ADDRESSES: You should mention the docket number that appears at the top of this document in your comments and submit your comments in writing to:

Docket Clerk, U.S. DOT Dockets, Room PL–401, 400 7th St., SW, Washington, DC 20590. You may call Docket Management at (202) 366–9324. You may visit the Docket Room from 10 a.m. to 5 p.m., EST., Monday through Friday, except Federal Holidays. An electronic version of this document is available on the World Wide Web at http://dms.dot.gov.

FOR FURTHER INFORMATION CONTACT: For non-legal issues you may call Thomas W. Harrelson, Director, Office of Cargo Preference at (202) 366–5515. For legal issues, you may call Murray Bloom, Chief, Division of Maritime Assistance Programs of the Office of Chief Counsel at (202) 366–5320. You may send mail to both of these officials at Maritime Administration, 400 Seventh St., S.W., Washington, D.C., 20590.

SUPPLEMENTARY INFORMATION:

Comments

How Do I Prepare and Submit Comments?

Your comments must be written and in English. To ensure that your comments are correctly filed in the Docket, please include the docket number of this document in your comments.

We encourage you to write your primary comments in a concise fashion. However, you may attach necessary additional documents to your comments. There is no limit on the length of the attachments. Please submit two copies of your comments, including the attachments, to Docket Management at the address given above under **ADDRESSES.**

How can I be sure that my comments were received?

If you wish Docket Management to notify you upon its receipt of your comments, enclose a self-addressed, stamped postcard in the envelope containing your comments. Upon receiving your comments, Docket Management will return the postcard by mail.

How do I submit confidential business information?

If you wish to submit any information under a claim of confidentiality, you should submit three copies of your complete submission, including the information you claim to be confidential business information, to the Chief Counsel, Maritime Administration, at the address given above under **FOR FURTHER INFORMATION CONTACT.** In addition, you should submit two copies, from which you have deleted the claimed confidential business information, to Docket Management at the address given above under **ADDRESSES.** When you send comments containing information claimed to be confidential business information, you should include a cover letter setting forth with specificity the basis for any such claim.

Will the agency consider late comments?

We will consider all comments that Docket Management receives before the close of business on the comment closing date indicated above under **DATES.** To the extent possible, we will also consider comments that Docket Management receives after that date. If Docket Management receives a comment too late for us to consider it in developing a proposed rule (assuming that one is issued), we will consider that comment as an informal suggestion for future rulemaking action.

How can I read the comments submitted by other people?

You may read the comments received by Docket Management at the address given above under **ADDRESSES.** The hours of the Docket Room are indicated above in the same location.

You may also see the comments on the Internet. To read the comments on the Internet, take the following steps: Go to the Docket Management System (DMS) Web page of the Department of Transportation (http://dms.dot.gov/). On that page, click on ''search.'' On the next page (http://dms.dot.gov/search/), type in the four-digit docket number shown at the beginning of this document. Example: If the docket number were ''MARAD–1999–1234,'' you would type ''1234.'' After typing the docket number, click on ''search.'' On the next page, which contains docket summary information for the docket you selected, click on the desired comments. You may download the comments.

Please note that even after the comment closing date, we will continue to file relevant information in the Docket as it becomes available. Further, some people may submit late comments. Accordingly, we recommend that you periodically check the Docket for new material.

The Cargo Preference Act of 1954, Pub. L. 83–664, 68 Stat. 832 (1954), amended the Merchant Marine Act, 1936, by adding Section 901(b), codified at 46 App. U.S.C. 1241(b) ('54 Act). The '54 Act applies:

> ''[w]henever the United States shall procure, contract for, or otherwise obtain for its own account, or shall furnish to or for the account of any foreign nation without provision for reimbursement, any equipment, materials, or commodities, within or without the United States, or shall advance funds or credits or guarantee the convertibility of foreign currencies in connection with the furnishing of such equipment, materials, or commodities, * * *''

Government agencies are required to take such steps as may be necessary and practicable to assure that at least 50 percent of the gross tonnage of certain government-sponsored cargoes—

> '' * * * (computed separately for dry bulk carriers, dry cargo liners, and tankers), which may be transported on ocean vessels shall be transported on privately-owned United States-flag commercial vessels, to the extent such vessels are available at fair and reasonable rates for United States-flag commercial vessels, in such manner as will insure a fair and reasonable participation of United States-flag commercial vessels in such cargoes by geographic areas. * * *''

The Food Security Act of 1985, Pub. L. 99–198, exempted certain agricultural export enhancement programs from cargo preference, but increased the U.S.-flag share of humanitarian food aid programs from 50 to 75 percent.

MARAD's oversight role in administration of cargo preference is founded on section 27 of the Merchant Marine Act of 1970, Pub. L. 91–469, which added the following subsection to section 901(b) of the Merchant Marine Act, 1936:

> ''Every department or agency having responsibility under this subsection shall administer its programs with respect to this subsection under regulations issued by the Secretary of Transportation. The Secretary of Transportation shall review such administration and shall annually report to the Congress with respect thereto.'' 46 App. U.S.C. 1241(b).

The Secretary of Transportation has delegated the authority under this provision to the Maritime Administrator. (49 CFR 1.66(e).) MARAD's regulations governing administration of cargo preference are located at 46 CFR part 381. Guidance as to the priority of a completely U.S.-flag service over a mixed U.S./foreign-flag service is contained in a policy letter issued on June 16, 1986.

MARAD is requesting comment on whether the regulations governing the '54 Act, last revised in 1996, should be updated. Comments are requested specifically on the questions presented below:

1. Clarification of §§ 381.4 and 381.5

Sections 381.4 and 381.5, which address liner and bulk vessels, respectively, relate to the requirement to fix American-flag tonnage prior to fixing foreign-flag vessels in order to ensure fair and reasonable participation of U.S.-

flag vessels. MARAD has interpreted these provisions to mean that at least 75 percent, as applicable to packaged or bulk agricultural products, of the freight generated by each commodity procurement transaction must be transported on U.S.-flag vessels. Doing so ensures that the shipper agencies meet their preference obligations on a current basis during the year. Some shipper agencies have argued that the language of the two sections may not support MARAD's interpretation, or in any event, should be modified to allow greater flexibility. On the other hand, the use of more direct language in §§ 381.4 and 381.5 may serve to quell confusion or doubt as the intent of these provisions. Accordingly, we request your comment on whether these two provisions should be clarified, and also whether the two provisions could be combined or otherwise revised.

2. Foreign-Flag Feeder Vessels

MARAD's guidance letter of June 16, 1986, summarizes the holdings of several long-standing decisions of the Comptroller General (B–145455, June 12, 1968; B–140872, May 10, 1960; B–165421, Dec. 23, 1968; and B–155185, Nov. 17, 1969) and provides that an ocean service which provides for U.S.-flag carriage for the entire voyage has preference over an ocean service which uses a foreign-flag vessel for a portion of the transportation. Only in the absence of all-U.S.-flag service is a mixed U.S.-flag/foreign-flag service considered to be in fulfillment of the requirements of cargo preference. When two mixed U.S.-flag/foreign-flag services are vying for the same shipment, the service that makes the greater use of U.S.-flag vessels (i.e., the service with the longer leg served by U.S.-flag vessels) wins the cargo.

Shipper agencies note that the guidance sometimes restricts their ability to ship cargo expeditiously and comply with cargo preference due to the paucity of direct U.S.-flag service and the relative abundance of mixed U.S.-flag/foreign-flag service. The shipper agencies complain that the added cost of all-U.S.-flag service over mixed U.S.-flag/foreign-flag service results in less funds being available for purchase of commodities. They also note that large, modern U.S.-flag container vessels cannot serve many of the recipient developing nation's ports, or do so economically due to lack of port facilities. Although 75 percent U.S.-flag carriage is statutorily required, there may be ways to achieve that required level of U.S.-flag participation in these cargoes while allowing better use of U.S.-flag vessels and more efficient routing of shipments. Accordingly, we seek your comment on whether MARAD may, and if so should, adopt new preference guidance, which may be incorporated into a rule, such as one that gives equal preference to all-U.S.-flag service and mixed U.S.-flag/foreign-flag service, but counts only the ton miles carried by the U.S.-flag vessel towards the goal of 75 percent U.S.-flag carriage. In other words, can performance by U.S.-flag vessels of 75 percent of the ton miles generated by the preference cargoes equate to fulfillment of the statutory requirement that U.S.-flag vessels carry 75 percent of the preference cargoes in consonance with the determinations of the Comptroller General?

3. Basis for Compliance Measurement

In addition to the 75 percent carriage requirement, the statute requires that U.S.-flag vessels be given fair and reasonable opportunity to transport such cargoes by liner, tanker and dry bulk vessels and by geographic areas. The geographic areas referred to in the statute are foreign geographic areas inasmuch as this provision is intended to ensure that U.S.-flag vessels participate in the long hauls as well as the short hauls.

The Food for Progress Act provides for the donation of food to emerging democratic nations. Section 416 of the Agriculture Act of 1949 provides for the donation of bulk grain and other surplus agricultural commodities. The foreign assistance programs, popularly known as ''PL–480,'' established by the Agricultural Trade Development and Assistance Act of 1954, as amended, consist of three titles. Title I provides concessional, long-term financing for the sale of U.S. agricultural commodities to friendly developing countries. Title II provides for the donation of packaged, processed and bulk commodities to least developed countries. Title III provides for the donation of food to least developed countries on a grant basis.

Compliance with cargo preference requirements for programs under Food for Progress and Section 416 has been measured on a country-by-country basis for each commodity procurement. Title I shipments are monitored by a more restrictive requirement that cargo reservation be measured on a purchase authorization basis by vessel type. Unlike other PL–480 programs, under Title I requirements, each commodity requires a separate purchase authorization. Only with regard to the Title II program has MARAD informally acquiesced to measurement of compliance on a ''global'' basis by vessel type. This program primarily ships numerous smaller parcels on liner vessels, where there is reduced likelihood of disadvantage accruing to the U.S.-flag carrier and greater difficulty by the program office in meeting compliance by country by vessel type.

We invite your comments on whether these compliance regimes should be maintained as is, and memorialized in regulations, standardized or consolidated or otherwise revised. Should performance in meeting preference standards for the Title II program be changed to a country by vessel type basis so as to conform to the requirements for other PL–480 programs?

4. Definition of ''Liner'' Vessel and ''Transshipment'

While the statute specifies that U.S.-flag carriers be given a fair and reasonable opportunity for the carriage of food aid cargo by liner, tanker and bulk vessel, the term ''liner'' does not connote or adequately define what is a liner vessel. The term ''liner'' relates to a type of service instead of a type of vessel. A vessel engaged in liner service, which is regularly scheduled service available for common carriage, may be a general cargo vessel, a breakbulk vessel, a container vessel or a tug/deck barge combination. Cargo shipped under liner service requirements for humanitarian aid programs are contracted for under booking notices, whereas freight for dry bulk or tanker vessels are subject to charter parties or contracts of affreightment. Use of the term ''liner'' in the statute, without further definition in the regulations, has led to administrative difficulties in adequately recording shipments subject to cargo preference. Therefore, we welcome your comments regarding whether MARAD should amend its regulations to define what type of vessels constitute or should be included under the term ''liner'' vessels for the purpose of measuring compliance under cargo preference.

Ocean transportation has changed dramatically since the cargo preference regulations were last revised. Containerization with hub and spoke networks, alliances and consortia now dominate the non-bulk trades. The commercial world and insurance underwriters now differentiate between ''transshipment'' and ''relay'' between vessels of the same transportation network manager. Should MARAD recognize and define ''relay'' versus ''transshipment?'' What should be those definitions? Should they apply only to containerized cargoes? What impact

would this have on preference cargo transportation?

5. Definition of Commercial Terms

The use of special government-defined terms of sale and transportation for preference cargoes sometimes creates confusion in the marketplace and increases costs. Commercial suppliers and carriers use commercial terms for the majority of their business but must use non-standard government terms when dealing with the U.S. Government. For example, the U.S. Department of Agriculture (USDA) and the Agency for International Development (AID) have defined the term ''FAS'' (free along side) to mean delivery to a point of rest in a terminal rather than the International Commercial Terms (Incoterms) definition of ''FAS (* * *named port)'' as ''alongside the vessel on the quay or in the lighters at the named port of shipment.'' As a result, MARAD interprets the government definition to not require that a vessel physically call at the port whereas the commercial Incoterm definition requires a physical vessel call. Similarly, USDA and AID use other non-standard terms, such as ''Intermodal-Plant'' and ''Intermodal-Point'' with different buyer/seller/carrier responsibilities than the commercial Incoterm ''EXWorks (. . .named place).''

We welcome your comments on whether MARAD should require the use of commercial terms for cargo preference transactions. Would this clarify the sales and transportation requirements? Would it simplify the process and reduce overall government costs?

6. Commercial Practices

The use of non-commercial practices in government cargo preference transportation contracts may be reducing competition and increasing costs. For example, USDA and AID transportation contracts do not follow the general commercial practices of ''freight earned upon loading'' and ''freight payable on loading,'' or ''free-in and out'' for dry bulk charters. As a result, the ocean carrier has to finance the costs of moving these government agricultural cargoes. Those added financial costs to the carrier are reflected in higher freight rates borne by the Government.

Should MARAD require the use of commercial practices in the transportation of preference cargoes? If so, what commercial practices should be implemented? Would such commercial practices simplify the transportation contracts and reduce costs to the Government?

7. Other Issues

This request for comments concerning the desirability of rulemaking is not limited to the foregoing. MARAD also seeks comments and/or suggestions concerning other issues that may affect the implementation of the cargo preference statutes and whether MARAD's regulations should be amended or modified in light of such issues.

Rulemaking Analysis and Notices

Executive Order 12866 (Regulatory Planning and Review)

If a rule is actually promulgated, we may consider it an economically significant regulatory action under section 3(f) of E.O. 12866. In the event that MARAD decides to proceed with a rulemaking, we will prepare a preliminary regulatory evaluation that reflects the comments to this advance notice of proposed rulemaking.

Federalism

MARAD has analyzed this advance notice of proposed rulemaking in accordance with the principles and criteria contained in Executive Order 12612 and has determined that any rule that might be subsequently promulgated would not have sufficient federalism implications to warrant the preparation of a Federalism Assessment.

Regulatory Flexibility Act

The Maritime Administration will evaluate any future proposed rule under the Regulatory Flexibility Act of 1980, 5 U.S.C. 601–612, to certify whether any rule that might be promulgated subsequent to this advance notice of proposed rulemaking would have a significant economic impact on a substantial number of small entities. Companies providing the carriage of preference cargoes generally are not small entities.

EIS

Any rule that might be subsequently promulgated would not be expected to significantly affect the environment. Accordingly, an Environmental Impact Statement may not be required under the National Environmental Policy Act of 1969.

Paperwork Reduction Act

We would evaluate any rule that might be promulgated to determine whether it would be expected to significantly change the current requirement for the collection of information.

By order of the Maritime Administrator.

Dated: January 25, 1999.

Joel C. Richard,

Secretary.

[FR Doc. 99–2046 Filed 1–27–99; 8:45 am]

BILLING CODE 4910–81–P

DEPARTMENT OF TRANSPORTATION

National Highway Traffic Safety Administration

49 CFR Part 572

[Docket No. NHTSA–99–5032]

RIN 2127–AG 77

Anthropomorphic Test Dummy; Occupant Crash Protection

AGENCY: National Highway Traffic Safety Administration (NHTSA), Department of Transportation.

ACTION: Notice of proposed rulemaking.

SUMMARY: This document proposes to adopt design and performance specifications for a new 3-year-old child dummy. The agency believes that the new dummy, part of the family of Hybrid III test dummies, is more representative of humans than the existing 3-year old child dummy specified by agency regulations. Further, it allows the assessment of the potential for more types of injuries. The new dummy is especially needed to evaluate the effects of air bag deployment on out-of-position children. It would also provide greater and more useful information in a variety of environments to better evaluate child safety. Adopting the dummy would be the first step toward using the dummy to evaluate the safety of air bags for children. The issue of specifying use of the dummy in determining compliance with performance tests, e.g., as part of the agency's occupant protection standard and/or child restraint standard, is being addressed in other rulemakings, most notably the proposed advanced air bag rulemaking currently pending before the agency.

DATES: Comments must be received by March 29, 1999.

ADDRESSES: Comments should refer to the docket number, and be submitted to: Docket Management, Room PL–401, 400 Seventh Street, SW, Washington, DC 20590 (Docket hours are from 10 a.m. to 5 p.m.)

FOR FURTHER INFORMATION CONTACT: For nonlegal issues: Stan Backaitis, Office of Crashworthiness Standards (telephone: 202–366–4912).

For legal issues: Rebecca MacPherson, Office of the Chief Counsel (202–366–2992).

Both can be reached at the National Highway Traffic Safety Administration, 400 Seventh St., SW, Washington, DC 20590.

SUPPLEMENTARY INFORMATION: The need for a new 3-year-old dummy has become urgent with the emergence of the safety problems that current air bags pose for out-of-position children. Experience in using the existing 3-year-old dummy in subpart C of part 572 has shown it to be adequate for the purpose of evaluating child restraints for the injury criteria and test conditions specified by Standard No. 213, Child restraint systems. However, that dummy is limited with respect to the types of injury risks it can measure, particularly in an air bag environment.

For example, since neck injury is one of the primary causes of air bag-related fatalities to out-of-position children, a dummy must have a high degree of biofidelity in areas such as impact responses in neck flexion and extension motion to evaluate the effects of air bag deployment. However, the neck of the existing subpart C dummy does not have a multi-segment design. Accordingly, it has limited biofidelity in these areas.

By contrast, the more advanced Hybrid III 3-year-old child dummy (hereafter referred to as the H–III3C dummy) provides a more human-like impact response than the subpart C dummy as well as a broader selection of instrumented measurements to assess the injury potential to child occupants. Of particular significance is the multi-segmented neck, multi-rib thorax, and the ability to monitor submarining tendencies related to abdominal loading. Because of the greater biofidelity and extended measurement capability of the H–III3C dummy, it can be used to evaluate the safety of children in a much wider array of environments than the existing dummy, including assessing the effects of air bag deployment on out-of-position children. The agency notes that the H–III3C dummy is the only advanced 3-year-old child dummy that has been developed and evaluated to date.

The H–III3C dummy is part of a family of Hybrid III-type dummies. The first Hybrid III dummy was a 50th percentile male dummy. NHTSA has specified use of this dummy for compliance testing under Standard No. 208, *Occupant Crash Protection*, since 1986, initially on an optional basis, and more recently on a mandatory basis.

The need for a family of Hybrid III-type dummies having considerably improved biofidelity and anthropometry was recognized by the Centers for Disease Control and Prevention (CDC) in 1987 when it awarded a contract to Ohio State University under the title ''Development for Multi-sized Hybrid III Based Dummy Family.'' At that time, the funding covered only the development of a small female and a large male dummy.

Development of a Hybrid III 3-year-old dummy began in 1992 when the SAE Small Female, Large Male and Six Year Old Child Dummies Task Group [1] identified a need for a new dummy equipped with sufficient instrumentation capable of assessing a child's interaction with both air bags and child restraints. The task group noted that the dummy should be suitable for use in sitting, kneeling and standing postures. After a preliminary design was conceived and reviewed, a prototype dummy was developed and made available to the task group in July 1994. Initial evaluation of the dummy revealed numerous structural and functional problems. Prior to testing by NHTSA, the dummy designer, under the guidance of the SAE Hybrid III Dummy Family Task Group, addressed additional structural and impact response problems revealed through testing of the revised prototype throughout 1995, 1996, and early 1997. In May 1997, NHTSA initiated a thorough test and evaluation program in anticipation of formal rulemaking.

The agency has now completed its evaluation of the H–III3C dummy and has tentatively concluded that it is ready for incorporation into part 572. NHTSA is placing in the docket a technical report entitled ''Development and Evaluation of the Hybrid III 3-Year-Old Child Dummy.'' That report provides the technical information supporting this rulemaking.

Accordingly, the agency is proposing specifications and performance criteria for the H–III3C dummy. The specifications would consist of the following two items:

(1) A drawings and specifications package entitled ''Parts List and Drawings for the Hybrid III 3-Year-Old Dummy (October 1998)''; and

(2) A user's manual entitled ''User's Manual for the Hybrid III 3-Year-Old Test Dummy [a date would be inserted in the final rule]''.

In order to allow comment on the general content and format of the user's manual, NHTSA has placed in the docket a copy of a manual entitled ''Hybrid III 3-Year-Old Child Dummy User's Manual'', SAE Engineering Aid 31 (rev. June 25, 1998).

The specifications are intended to ensure that the dummies are uniform in their construction and capable of uniform and repeatable response in the impact environment. The agency notes that the first item listed above, the parts list and drawings, will be available for inspection in NHTSA's docket. (Since this item is non-scannable, it cannot be placed in the DOT Dockets Management System (DMS). Instead a statement indicating where it may be viewed, i.e., in NHTSA's docket, will be placed in the DMS.) Copies may also be obtained from Reprographic Technologies, 9000 Virginia Manor Road, Beltsville, MD 20705; Telephone: (301) 210–5600.

As with other dummies, NHTSA is proposing impact performance criteria to serve as calibration checks, and to further assure the kinematic uniformity of the dummy and the absence of structural damage and functional deficiency from previous use. The tests address head, neck, and thorax impact responses and resistance assessments of the lumbar spine-abdomen area to torso flexion motion.

The agency is proposing generic specifications for all of the dummy-based sensors. For most earlier dummies, the agency specified sensors by make and model. However, NHTSA believes that approach is unnecessarily restrictive and limits innovation and competition.

The proposed specifications are essentially generic and reflect performance characteristics of the sensors used in NHTSA's dummy evaluation series that are identified by make and model in the above-referenced technical report ''Development and Evaluation of the Hybrid III 3-year-old Child Dummy.'' Specifications for the proposed sensors are included in the drawing package. Interested persons are encouraged to comment on the adequacy of the proposed specifications; the potential impact on the quality of measurements to be acquired, including the comparability of data using sensors manufactured by different companies; and issues related to calibration assurance tests.

NHTSA notes that the H–III3C dummy is the third of several new dummies it is proposing to add to part 572. The agency has already proposed adding a new, advanced 6-year-old dummy (H–III6C) (63 FR 35170) and a fifth percentile small adult female dummy (H–III5F) (63 FR 46981). Within the next six weeks, it plans to propose adding the CRABI 12-month-old child

[1] The task group has been renamed the ''Hybrid III Dummy Family Task Group''. Minutes of the task groups meetings are available for review in the NHTSA docket (Docket no. NHTSA98-4283).

dummy. The agency intends to use these dummies in connection with its rulemaking for advanced air bags which is currently in the notice and comment stage (63 FR 49958). All of these dummies could be specified for use in a variety of potential Standard No. 208 tests, including static out-of-position tests and/or various dynamic tests. The child dummies could also be specified for use in Standard No. 213 tests.

This notice only concerns the H–III3C dummy, and is only proposing to add the dummy to part 572. The issue of specifying the use of the H–III3C dummy as part of Standard No. 208 is addressed in the advanced air bag rulemaking and may be addressed in a future rulemaking regarding Standard No. 213. However, since one of the primary purposes of adding the dummy to part 572 is to enable it to be specified for use in the Federal motor vehicle safety standards, NHTSA encourages commenters to address its suitability for tests related to occupant crash protection, e.g., those discussed or proposed in the NPRM on advanced air bags. The agency also encourages commenters to address the dummy's suitability with respect to measuring proposed and other injury criteria.[2]

Rulemaking Analyses and Notices

A. Executive Order 12866 and DOT Regulatory Policies and Procedures

NHTSA has considered the impact of this rulemaking action under Executive Order 12866 and the Department of Transportation's regulatory policies and procedures. This rulemaking document was not reviewed by the Office of Management and Budget under E.O. 12866, ''Regulatory Planning and Review.'' The rulemaking action has been determined not to be significant under the Department's regulatory policies and procedures.

This document proposes to amend 49 CFR part 572 by adding design and performance specifications for a new, more advanced 3-year old child dummy which the agency may later separately propose for use in the Federal motor vehicle safety standards. If this proposed rule becomes final, it would directly affect only those businesses which choose to manufacture or test with the dummy. Vehicle manufacturers could be indirectly affected under the advanced air bag rulemaking currently pending before the agency. It does not impose any requirements on anyone.

The cost of an instrumented H–III3C dummy would be between $44,000 and $80,000, with an uninstrumented H–III3C dummy costing approximately $30,000 and instrumentation costing approximately $14,000 to $50,000 (depending on the amount of data channels the user chooses to collect).

Because the economic impacts of this proposal are so minimal, no further regulatory evaluation is necessary.

B. Regulatory Flexibility Act

NHTSA has considered the effects of this rulemaking action under the Regulatory Flexibility Act (5 U.S.C. 601 *et seq.*) I hereby certify that the proposed amendment would not have a significant economic impact on a substantial number of small entities. The proposed amendment would not impose or rescind any requirements for anyone. Therefore, it would not have a significant economic impact on a substantial number of small entities.

C. National Environmental Policy Act

NHTSA has analyzed this proposed amendment for the purposes of the National Environmental Policy Act and determined that it would not have any significant impact on the quality of the human environment.

D. Executive Order 12612 (Federalism)

The agency has analyzed this proposed amendment in accordance with the principles and criteria set forth in Executive Order 12612. NHTSA has determined that the proposed amendment does not have sufficient federalism implications to warrant the preparation of a Federalism Assessment.

E. Unfunded Mandates Act

The Unfunded Mandates Reform Act of 1995 requires agencies to prepare a written assessment of the costs, benefits and other effects of proposed or final rules that include a Federal mandate likely to result in the expenditure by State, local or tribal governments, in the aggregate, or by the private sector, of more than $100 million annually (adjusted for inflation with base year of 1995). This proposal does not meet the definition of a Federal mandate because it does not impose requirements on anyone. In addition, annual expenditures would not exceed the $100 million threshold.

F. Executive Order 12778 (Civil Justice Reform)

This proposed rule would not have any retroactive effect. Under 49 U.S.C. 30103, whenever a Federal motor vehicle safety standard is in effect, a State may not adopt or maintain a safety standard applicable to the same aspect of performance which is not identical to the Federal standard, except to the extent that the state requirement imposes a higher level of performance and applies only to vehicles procured for the State's use. 49 U.S.C. 30161 sets forth a procedure for judicial review of final rules establishing, amending or revoking Federal motor vehicle safety standards. That section does not require submission of a petition for reconsideration or other administrative proceedings before parties may file suit in court.

G. Paperwork Reduction Act

In accordance with the Paperwork Reduction Act of 1980 (P.L. 96–511), there are no requirements for information collection associated with this proposed rule.

Request for Comments

Interested persons are invited to submit comments on this proposal. Two copies should be submitted.

All comments must not exceed 15 pages in length (49 CFR 553.21). Necessary attachments may be appended to these submissions without regard to the 15-page limit. This limitation is intended to encourage commenters to detail their primary arguments in a concise fashion.

If a commenter wishes to submit certain information under a claim of confidentiality, three copies of the complete submission, including purportedly confidential business information, should be submitted to the Chief Counsel, NHTSA, at the street address given above, and two copies from which the purportedly confidential information has been deleted should be submitted to the Docket Section. A request for confidentiality should be accompanied by a cover letter setting forth the information specified in the agency's confidential business information regulation. 49 CFR part 512.

All comments received by NHTSA before the close of business on the comment closing date indicated above will be considered, and will be available for examination in the docket at the above address both before and after that date. To the extent possible, comments filed after the closing date will also be considered. Comments received too late for consideration in regard to this action will be considered as suggestions for further rulemaking action. Comments will be available for inspection in the docket. NHTSA will continue to file relevant information as it becomes available in the docket after the closing

[2] For information concerning potential injury criteria, see *Development of Improved Injury Criteria for the Assessment of Advanced Automotive Restraint Systems*, June, 1998, Docket No. NHTSA98–4405–9. (Available on the NHTSA website at http://www.nhtsa.dot.gov.)

date, and recommends that interested persons continue to examine the docket for new material.

Those persons desiring to be notified upon receipt of their comments in the rules docket should enclose a self-addressed, stamped postcard in the envelope with their comments. Upon receiving the comments, the docket supervisor will return the postcard by mail.

List of Subjects in 49 CFR Part 572

Motor vehicle safety.

In consideration of the foregoing, NHTSA proposes to amend 49 CFR part 572 as follows:

Part 572—Anthropomorphic Test Dummies

1. The authority citation for part 572 would continue to read as follows:

Authority: 49 USC 332, 30111, 30115, 30117; and 30166 delegation of authority at 49 CFR 1.50.

2. 49 CFR Part 572 would be amended by adding a new Subpart P consisting of 572.140–572.146 to read as follows:

Subpart P—3-year-Old Child

Sec.
572.140 Incorporation by reference.
572.141 General description.
572.142 Head assembly and test procedure.
572.143 Neck-headform assembly and test procedure.
572.144 Thorax assembly and test procedure.
572.145 Upper and lower torso assemblies and torso flexion test procedure.
572.146 Test Condition and Instrumentation.

Subpart P—3-year-Old Child

§ 572.140 Incorporation by reference.

(a) The following materials are hereby incorporated in this subpart P by reference:

(1) A drawings and specifications package entitled ''Parts List and Drawings for the Hybrid III 3-year-old dummy (October 1998)'';

(2) A user's manual entitled ''Operations and Maintenance Manual for the Hybrid III 3-year-old test dummy [a date will be inserted in the final rule]'';

(3) SAE Recommended Practice J211, Rev. Mar95 ''Instrumentation for Impact Tests'';

(4) SAE J1733 of 1994–12 ''Sign Convention for Vehicle Crash Testing''.

(5) The Director of the **Federal Register** approved those materials incorporated by reference in accordance with 5 U.S.C. 552(a) and 1 CFR part 51. Copies of the materials may be inspected at NHTSA's Docket Section, 400 Seventh Street SW, room 5109, Washington, DC, or at the Office of the Federal Register, 800 North Capitol Street, NW, Suite 700, Washington, DC.

(b) The incorporated materials are available as follows:

(1) The drawings and specifications package referred to in paragraph (a)(1) of this section and the user's manual referred to in paragraph (a)(2) of this section are available from Reprographic Technologies, 9000 Virginia Manor Road, Beltsville, MD 20705, (301) 419–5070.

(2) The SAE materials referred to paragraphs (a)(3) and (a)(4) of this section are available from the Society of Automotive Engineers, Inc., 400 Commonwealth Drive, Warrendale, PA 15096.

§ 572.141 General description.

(a) The representative 3-year-old is described by the following materials:

(1) Technical drawings and specifications package 210–0000, the titles of which are listed in Table A;

(2) Operation and Maintenance Manual (to be incorporated at issuance of final rule);

(b) The dummy is made up of the component assemblies set out in the following Table A:

TABLE A

Component assembly	Drawing No.
Head Assembly	210–1000.
Neck Assembly (complete)	210–2001.
Upper/Lower Torso Assembly	210–3000.
Leg Assembly	210–5000–1(L),–2(R).
Arm Assembly	210–6000–1(L),–2(R).

(c) Adjacent segments are joined in a manner such that except for contacts existing under static conditions, there is no contact between metallic elements throughout the range of motion or under simulated crash impact conditions.

(d) The structural properties of the dummy are such that the dummy conforms to this part in every respect before its use in any test similar to those specified in Standard Nos. 208, Occupant Crash Protection, and 213, Child Restraint Systems.

§ 572.142 Head assembly and test procedure.

(a) The head assembly for this test consists of the assembly (drawing 210–1000), the adapter plate (drawing ATD 6259), accelerometer mounting block (drawing SA–572–S80), mass simulation of 1/2 neck load transducer (drawing TE–107–001), and 3 accelerometers (drawing SA–572–S4).

(b) When the head assembly in paragraph (a) of this section is dropped from a height of 376.0+/−1.0 mm (14.8+/−0.04 in) in accordance with paragraph (c) of this section, the peak resultant acceleration at the location of the accelerometers at the head CG shall not be less than 250 g or more than 280 g. The resultant acceleration versus time history curve shall be unimodal, and the oscillations occurring after the main pulse shall be less than 10 percent of the peak resultant acceleration. The lateral acceleration shall not exceed +/−15 g's.

(c) Head test procedure. The test procedure for the head is as follows:

(1) Soak the head assembly in a controlled environment at any temperature between 18.9 and 25.6 °C (66 and 78 °F) and at any relative humidity between 10 and 70 percent for at least four hours prior to a test.

(2) Prior to the test, clean the impact surface of the head skin and the steel impact plate surface with isopropyl alcohol, trichlorethane, or an equivalent. Both impact surfaces must be clean and dry for testing.

(3) Suspend the head assembly with its midsagittal plane in vertical orientation as shown in Figure P1. The lowest point on the forehead is 376.0+/−1.0 mm (14.8 +/−0.04 in) from the steel impact surface. The 1.57 mm (0.062 in.) diameter holes located on either side of the dummy's head in transverse alignment with the CG, are used to ensure that the head transverse plane is level with respect to the impact surface. The angle between the lower surface plane of the neck transducer mass simulator (TE–107–001) and the

plane of the impact surface is 62 +/−1 degrees.

(4) Drop the head assembly from the specified height by a means that ensures a smooth, instant release onto a rigidly supported flat horizontal steel plate which is 51 mm (2 in) thick and 610 mm (24 in) square. The impact surface shall have a finish of not less than 0.2 microns (8 micro inches) (RMS) and not more than 2 microns (80 micro inches) (RMS).

(5) Allow at least 2 hours between successive tests on the same head.

§ 572.143 Neck-headform assembly and test procedure.

(a) The neck and headform assembly for the purposes of this test consist of the neck (drawing 210–2015), neck cable (drawing 210–2040), lower mount plate insert (drawing 9001373), upper mount plate insert (drawing 910420–048), bib simulator (drawing TE208–050), urethane washer (drawing 210–2050), neck mounting plate (drawing TE250–021), two jam nuts (drawing 9001336), load-moment transducer (drawing SA–572–S19), and head form (drawing TE208–000).

(b) When the neck and headform assembly, as defined in paragraph (a) of this section, is tested according to the test procedure in paragraph (c) of this section, it shall have the following characteristics:

(1) Flexion.

(i) Plane D referenced in Figure P2 shall rotate in the direction of preimpact flight with respect to the pendulum's longitudinal centerline not less than 70 degrees and not more than 82 degrees occurring between 45 milliseconds (ms) and 60 ms after time zero.

(ii) The peak moment measured by the neck transducer (drawing SA–572–S19) about the occipital condyles shall have a value not less than 44 Nm (32.4 ft-lb) and not more than 56 Nm (41.3 ft-lbs) occurring within the minimum and maximum rotation interval and the positive moment shall decay for the first time to 10 Nm (7.4 ft-lb) between 60 ms and 80 ms.

(2) Extension.

(i) Plane D referenced in Figure P3 shall rotate in the direction of preimpact flight with respect to the pendulum's longitudinal centerline not less than 80 degrees and not more than 90 degrees occurring between 50 ms and 65 ms after time zero.

(ii) The peak negative moment measured by the neck transducer (drawing SA–572–S19) about the occipital condyles shall have a value not more than −42 Nm (−31.0 ft-lb) and not less than −53 Nm (−39.1 ft-lb) occurring within the minimum and maximum rotation interval and the negative moment shall decay for the first time to −10Nm (−7.4 ft-lb) between 60 and 80 ms after time zero.

(3) Time-zero is defined as the time of initial contact between the pendulum striker plate and the honeycomb material.

(c) Test Procedure.

(1) Soak the neck assembly in a controlled environment at any temperature between 20.6 and 22.2 °C (69 and 72 °F) and at any relative humidity between 10 and 70 percent for at least four hours prior to a test.

(2) Torque the jam nut (drawing 9001336) on the neck cable (drawing 210–2040) to 0.2 Nm to 0.35Nm (2 in-lb to 3 in-lb).

(3) Mount the neck-headform assembly, defined in paragraph (a) of this section, on the pendulum so the midsagittal plane of the headform is vertical and coincides with the plane of motion of the pendulum as shown in Figure P2 for flexion and Figure P3 for extension tests.

(i) The moment and rotation data channels are defined to be zero when the longitudinal centerline of the neck and pendulum are parallel.

(ii) The test shall be conducted without inducing any torsion type twisting of the neck.

(4) Release the pendulum and allow it to fall freely to achieve an impact velocity of 5.50+/−0.10 m/s (18.05 + 0.40 ft/s) for flexion and 3.65 +/−0.1 m/s (11.98+/−0.40 ft/s) for extension tests, measured at the center of the pendulum accelerometer at the instant of contact with the honeycomb.

(i) Time-zero is defined as the time of initial contact between the pendulum striker plate and the honeycomb material. The pendulum accelerometer data channel shall be at the zero level at this time.

(ii) Stop the pendulum from the initial velocity with an acceleration vs. time pulse which meets the velocity change as specified below. Integrate the pendulum acceleration data channel to obtain the velocity vs. time curve as indicated in Table B:

TABLE B

Time	Flexion		Time	Extension	
ms	m/s	ft/s	ms	m/s	ft/s
Pendulum Pulse					
10	2.0–2.7	6.6–8.9	6	1.0–1.4	3.3–4.6
15	3.0–4.0	9.8–13.1	10	1.9–2.5	6.2–8.2
20	4.0–5.1	13.1–16.7	14	2.8–3.5	9.2–11.5

§ 572.144 Thorax assembly and test procedure.

(a) Thorax assembly. The thorax consists of the part of the torso assembly shown in drawing 210–3000.

(b) When the thorax of a completely assembled dummy (drawing 210–0000) is impacted by a test probe conforming to § 572.146(a) at 6.0 +/−0.1 m/s (19.7 +/−0.3 ft/s) according to the test procedure in paragraph (c) of this section,

(1) Maximum sternum displacement relative to the spine, measured with the chest deflection transducer (SA–572–S50), shall not be less than 32mm (1.3 in) and not more than 38mm (1.5in). During this displacement interval, the peak force, measured by the probe-mounted accelerometer in accordance with paragraph § 572.146(a), shall not be less than 0.6 kN (135 lb) and not more than 0.8 kN (180 lb).

(2) The internal hysteresis of the ribcage in each impact, as determined from the force vs deflection curve, shall be not less than 65 percent and not more than 85 percent.

(c) Test procedure.

(1) Soak the dummy in a controlled environment at any temperature between 20.6 and 22.2 °C (69 and 72 °F) and at any relative humidity between 10 and 70 percent for at least four hours prior to a test.

(2) Seat and orient the dummy, that wears light-weight-cotton stretch short-sleeve shirt and above-the-knee pants, on a seating surface without back support as shown in Figure P4, with the lower limbs extended horizontally and forward, the upper arms parallel to the

torso and the lower arms extended horizontally and forward all parallel to the midsagittal plane. The midsagittal plane is vertical within +/−1 degree and the posterior surface of the upper spine box is aligned at 90+/−1 degrees from the horizontal.

(3) Establish the impact point at the chest midsagittal plane so that the impact point of the longitudinal centerline of the probe coincides with the dummy's midsagittal plane and is centered on the center of No. 2 rib within +/−2.5mm and 0.5 degrees of a horizontal plane.

(4) Impact the thorax with the test probe so that at the moment of contact the probe's longitudinal center line falls within 2 degrees of a horizontal line in the dummy's midsagittal plane.

(5) Guide the test probe during impact so that there is no significant lateral, vertical or rotational movement.

(6) Allow at least 30 minutes between successive tests.

§ 572.145 Upper and lower torso assemblies and torso flexion test procedure.

(a) Upper/lower torso (drawing 210–3000) and upper leg assembly (drawings 210–5100–1(left) and -2(right)). The test objective is to determine the resistance of the lumbar spine and abdomen of a fully assembled dummy (drawing 210–0000) to flexion articulation between upper and lower halves of the torso assembly.

(b) When the upper half of the torso assembly of a seated dummy is subjected to a force continuously applied at the occipital condyle level through the rigidly attached adaptor bracket as shown in Figure P5 according to the test procedure set out in paragraph (c) of this section, the lumbar spine-abdomen assembly shall:

(1) Flex by an amount that permits the upper half of the torso as measured at the posterior surface of the spine accelerometer box (drawing 210–8020) to rotate in midsagittal plane 45 degrees with respect to the vertical, at which time the force level is not less than 130 N (28.8 lb) and not more than 180 N (41.2 lb), and

(2) Upon removal of the force, the upper torso assembly returns to within 10 degrees of its initial position.

(c) Test procedure. The procedure for the upper/lower torso flexion stiffness test is as follows:

(1) Soak the dummy in a controlled environment at any temperature between 20.6° and 22° C (69 and 72° F) and at any relative humidity between 10 and 70 percent for at least 4 hours prior to a test.

(2) Assemble the complete dummy (with or without the lower legs) and position at the fixture in a seated posture as shown in Figure P5.

(i) Secure the pelvis to the fixture where the lumbar load transducer or its structural replacement bolts to the pelvis weldment (drawing 219–4510) with a rigid bracket as shown in Figure P5.

(ii) Tighten the mountings so that the pelvis-lumbar joining surface is horizontal within +/−1 deg and the dummy as seated is in contact with the test surface.

(3) Install a low weight rigid loading adapter bracket (not to exceed 0.75 kg (1.65 lb)) to the posterior surface of the upper spine box as shown in Figure P5. The loading bracket is designed such that the point of load application coincides with the level of the occipital condyle and also provides means for measuring the rotation of the upper torso.

(4) Point the upper arms vertically downward and the lower arms forward.

(5) Inspect and adjust, if necessary, the seating of the abdominal insert within the pelvis cavity.

(6) The initial orientation of the angle reference plane of the seated, unsupported dummy shall not exceed 15 degrees of flexion as shown in Figure P5. The angle reference plane is defined by the transverse plane of the posterior surface of the upper thoracic instrumentation cavity makes with respect to the vertical as shown in Figure P5.

(7) Apply a forward force in the midsagittal plane through the adaptor bracket as shown in Figure P5 at any upper torso flexion rate between 0.5 and 1.5 degrees per second, until the angle reference plane reaches 45 degrees of flexion with the applied force at 62 degrees to 65 degrees from horizontal.

(8) Continue to apply a force sufficient to maintain 45 degrees of flexion for 10 seconds, and record the highest applied force during the 10 seconds period.

(9) Release all force as rapidly as possible, and measure the return angle with respect to the initial angle reference plane as defined in paragraph (c)(7) of this section 3 minutes after the release.

§ 572.146 Test conditions and instrumentation

(a) The test probe used for thoracic impact tests is a 50.8 mm (2 in) diameter cylinder that weighs 1.7+/−.02 kg (3.75 lb) including instrumentation. Its impacting end has a flat right angle face that is rigid and has an edge radius of 12.7 mm (0.5 in). The test probe has an accelerometer mounted on the end opposite from impact with its sensitive axis co-linear to the longitudinal centerline of the cylinder.

(b) Head accelerometers have the dimensions, response characteristics, and sensitive mass locations specified in drawing SA–572–S4 and are mounted in the head as shown in drawing 210–0000.

(c) The neck force-moment transducer has the dimensions, response characteristics, and sensitive axis locations specified in drawing SA–572–S19 and is mounted for testing as shown in the head-neck assembly consisting of drawing 210–0000.

(d) The shoulder force transducers have the dimensions and response characteristics specified in drawing SA–572–S21 and are allowed to be mounted as an option in the torso assembly as shown 210–0000.

(e) The thorax accelerometers have the dimensions, response characteristics, and sensitive mass locations specified in drawing SA–572–S4 and are mounted in the torso assembly in triaxial configuration at the T4 location, and as options at T1, and T12, and in uniaxial configuration on the sternum at the midpoint level of ribs 1 and 3 and on the spine coinciding with the midpoint level of #3 rib as shown in drawing 210–0000.

(f) The chest deflection potentiometer has the dimensions and response characteristics specified in drawing SA–572–50 and is mounted in the torso assembly as shown drawing 210–0000.

(g) The lumbar spine force/moment transducer has the dimensions and response characteristics specified in drawing SA–572–S20 and is allowed to be mounted as an option in the torso assembly as shown drawing 210–0000.

(h) The pubic force transducer has the dimensions and response characteristics specified in drawing SA–572–S18 and is allowed to be mounted as an option in the torso assembly as shown 210–0000.

(i) The acetabulum force transducers have the dimensions and response characteristics specified in drawing SA–572–S22 and are allowed to be mounted as options in the torso assembly as shown 210–0000.

(j) The anterior-superior iliac spine transducers have the dimensions and response characteristics specified in drawing SA-572-S17 and are allowed to be mounted as options in the torso assembly as shown drawing 210–0000.

(k) The pelvis accelerometers have the dimensions, response characteristics, and sensitive mass locations specified in drawing SA–572-S4 and are mounted within the pelvis in triaxial configuration as shown drawing 210–0000.

(l) The outputs of acceleration and force-sensing devices installed in the dummy and in the test apparatus specified by this part are recorded in individual data channels that conform to the requirements of SAE Recommended Practice J211, Mar95 ''Instrumentation for lmpact Tests,'' with channel classes as follows:

(1) Head acceleration—Class 1000

(2) Neck

(i) force—Class 1000

(ii) moments—Class 600

(iii) pendulum acceleration—Class 180

(3) Thorax:

(i) rib/sternum acceleration—Class 1000

(ii) spine and pendulum accelerations—Class 180

(iii) Thorax deflection—Class 600

(4) Lumbar: Forces and moments—Class 1000

(5) Pelvis: accelerations, forces and moments—Class 1000.

(m) Coordinate signs for instrumentation polarity conform to the Sign Convention For Vehicle Crash Testing, Surface Vehicle Information Report, SAE J1733, 1994–12.

(n) The mountings for sensing devices shall have no resonance frequency within range of 3 times the frequency range of the applicable channel class.

(o) Limb joints shall be set at lg, barely restraining the weight of the limb when it is extended horizontally. The force required to move a limb segment shall not exceed 2 g throughout the range of limb motion.

(p) Performance tests of the same component, segment, assembly, or fully assembled dummy shall be separated in time by a period of not less than 30 minutes unless otherwise noted.

(q) Surfaces of dummy components are not painted except as specified in this part or in drawings subtended by this part.

BILLING CODE 4910–59–P

Figure P 1

HEAD DROP TEST SET-UP SPECIFICATIONS

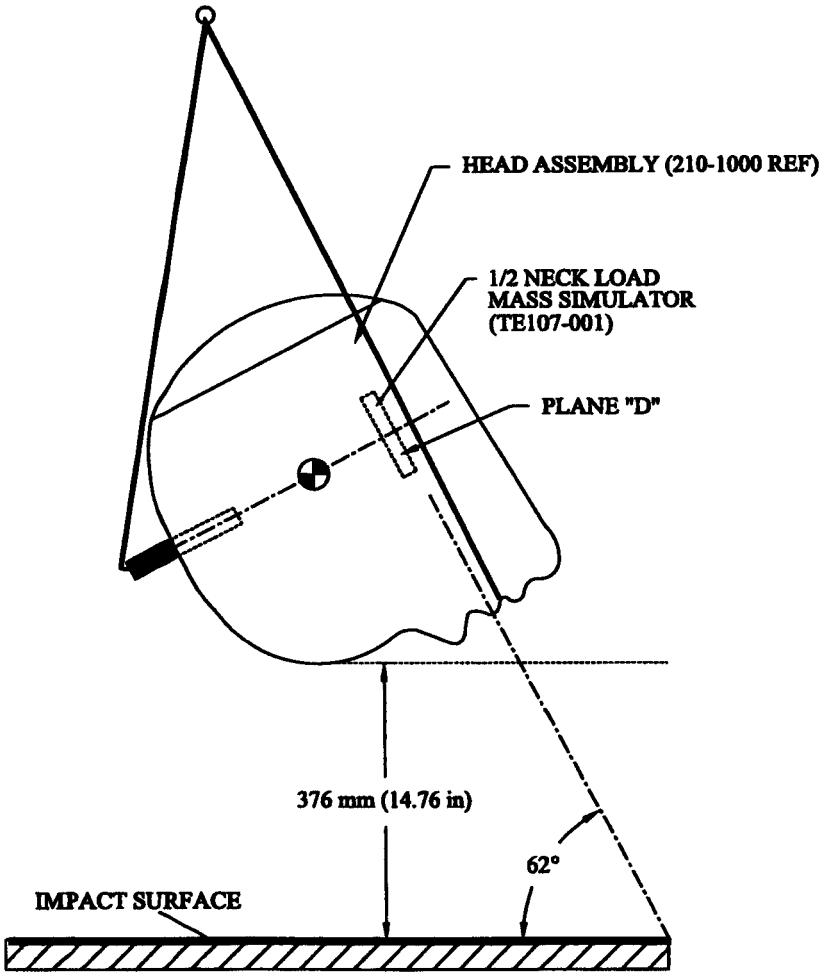

Figure P 2

NECK FLEXION TEST SET-UP SPECIFICATIONS

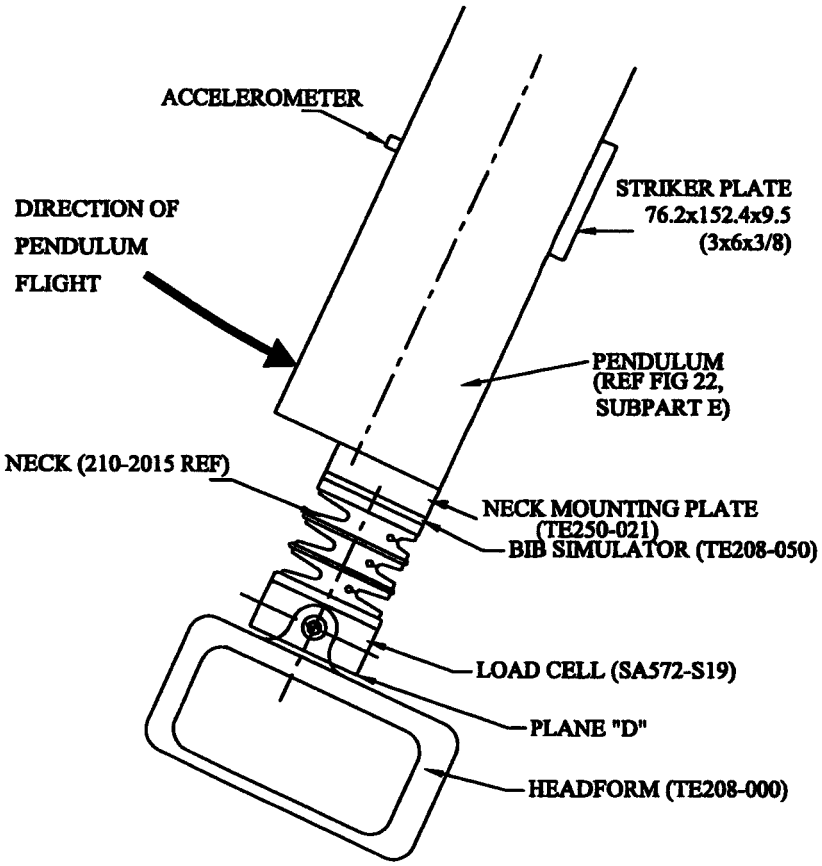

NOTE: MOUNT NECK AT LEADING EDGE OF PENDULUM TO AVOID INTERFERENCE WITH HEADFORM MOTION.

Figure P 3
NECK EXTENSION TEST SET-UP SPECIFICATIONS

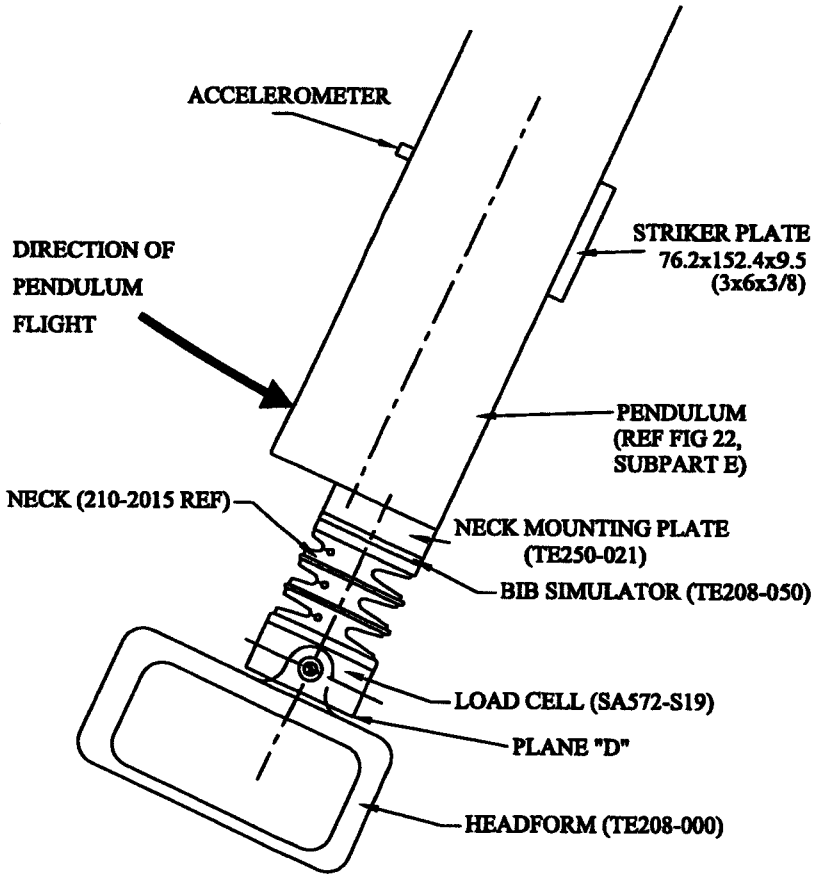

NOTE: MOUNT NECK AT LEADING EDGE OF PENDULUM TO AVOID INTERFERENCE WITH HEADFORM MOTION.

Figure P 4

THORAX IMPACT TEST SET-UP SPECIFICATIONS

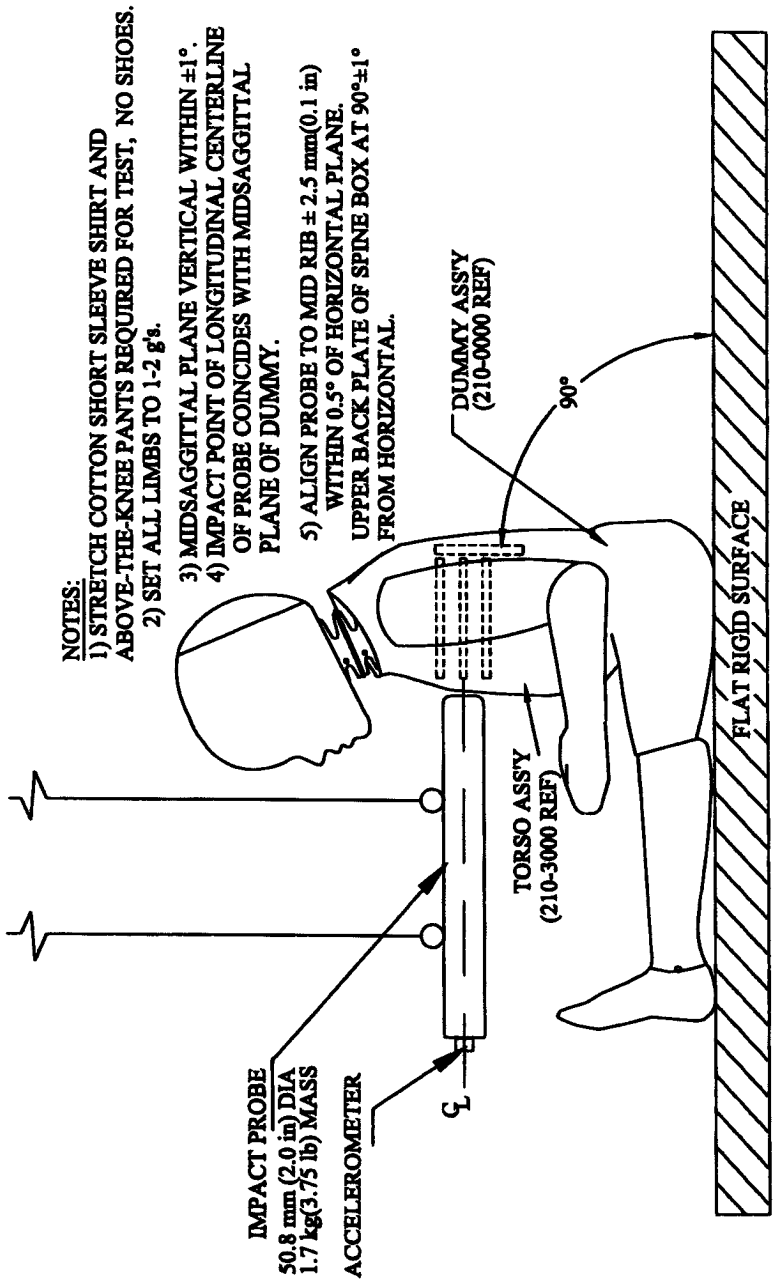

Figure P 5

TORSO FLEXION TEST SET-UP SPECIFICATION

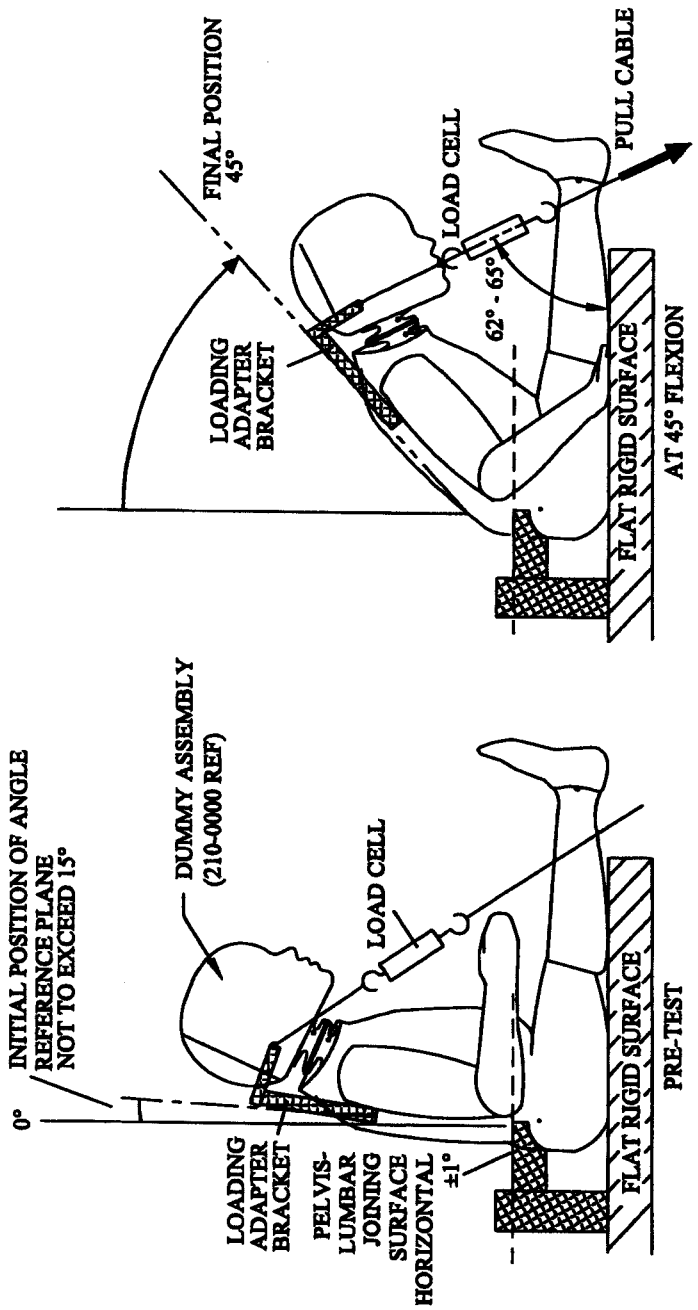

Issued on: January 22, 1999.

L. Robert Shelton,

Associate Administrator for Safety Performance Standards.

[FR Doc. 99–1939 Filed 1–27–99; 8:45 am]

BILLING CODE 4910–59–C

Notices

Federal Register

Vol. 64, No. 18

Thursday, January 28, 1999

This section of the FEDERAL REGISTER contains documents other than rules or proposed rules that are applicable to the public. Notices of hearings and investigations, committee meetings, agency decisions and rulings, delegations of authority, filing of petitions and applications and agency statements of organization and functions are examples of documents appearing in this section.

DEPARTMENT OF AGRICULTURE

Forest Service

Intergovernmental Advisory Committee Subcommittee Meeting

AGENCY: Forest Service, USDA.

ACTION: Notice of meeting.

SUMMARY: The Intergovernmental Advisory Committee will meet on February 4, 1999, at the DoubleTree Hotel, Jantzen Beach, 909 N. Hayden Island Drive, Portland, Oregon 97217. The purpose of the meeting is to continue discussions on the implementation of the Northwest Forest Plan. The meeting will begin at 9:15 a.m. and continue until 3:00 p.m. Agenda items to be discussed include, but are not limited to: information sharing on the state salmon plans and the Clean Water Act and Safe Water Drinking Act; continued discussion on integrating the forest plan into the management landscape; and progress reports on effectiveness monitoring and information issues. The IAC meeting will be open to the public and is fully accessible for people with disabilities. Interpreters are available upon request in advance. Written comments may be submitted for the record at the meeting. Time will also be scheduled for oral public comments. Interested persons are encouraged to attend.

FOR FURTHER INFORMATION CONTACT: Questions regarding this meeting may be directed to Don Knowles, Executive Director, Regional Ecosystem Office, 333 SW 1st Avenue, P.O. Box 3623, Portland, OR 97208 (Phone: 503–808–2180).

Dated: January 21, 1999.

Donald R. Knowles,

Designated Federal Official.

[FR Doc. 99–1995 Filed 1–27–99; 8:45 am]

BILLING CODE 3410–11–M

BROADCASTING BOARD OF GOVERNORS

Sunshine Act Meeting

DATE AND TIME: February 4, 1999; 8:00 a.m.

PLACE: The Omni Colonnade Hotel, Conference Room, 80 Aragon Avenue, Miami (Coral Gables), Florida 33134.

CLOSED MEETING: The members of the Broadcasting Board of Governors (BBG) will meet in closed session to review and discuss a number of issues relating to U.S. Government-funded non-military international broadcasting. They will address internal procedural, budgetary, and personnel issues, as well as sensitive foreign policy issues relating to potential options in the U.S. international broadcasting field such as those relating to Cuba. This meeting is closed because if open it likely would either disclose matters that would be properly classified to be kept secret in the interest of foreign policy under the appropriate executive order (5 U.S.C. 552b. (c)(1)) or would disclose information the premature disclosure of which would be likely to significantly frustrate implementation of a proposed agency action. (5 U.S.C. 552b. (c)(9)(B)) In addition, part of the discussion will relate solely to the internal personnel and organizational issues of the BBG or the International Broadcasting Bureau. (5 U.S.C. 552b. (c)(2) and (6)).

CONTACT PERSON FOR MORE INFORMATION: Persons interested in obtaining more information should contact Brenda Hardnett or John Lindburg at (202) 401–3736.

Dated: January 26, 1999.

John A. Lindburg,

Legal Counsel.

[FR Doc. 99–2223 Filed 1–26–99; 3:55 pm]

BILLING CODE 8230–01–M

DEPARTMENT OF COMMERCE

Bureau of Export Administration

Regulations and Procedures Technical Advisory Committee; Notice of Partially Closed Meeting

The Regulations and Procedures Technical Advisory Committee (RPTAC) will meet March 2, 1999, 9:00 a.m., Room 3884, in the Herbert C. Hoover Building, 14th Street between Constitution and Pennsylvania Avenues, N.W., Washington, D.C. The Committee advises the Office of the Assistant Secretary for Export Administration on implementation of the Export Administration Regulations (EAR) and provides for continuing review to update the EAR as needed.

Agenda

Open Session

1. Opening remarks by the Chairperson.
2. Presentation of papers or comments by the public.
3. Update on policies under review.
4. Update on encryption regulations.
5. Discussion on High Performance Computer interim regulation.
6. Report on licensing under India/Pakistan sanctions.
7. Report on pending Wassenaar Arrangement regulation.
8. Discussion on proposal to revise definition of Exporter of Record.
9. Election of new Chairperson.

Closed Session

10. Discussion of matters properly classified under Executive Order 12958, dealing with the U.S. export control program and strategic criteria related thereto.

A limited number of seats will be available for the open session. Reservations are not required. To the extent that time permits, members of the public may present oral statements to the Committee. The public may submit written statements at any time before or after the meeting. However, to facilitate the distribution of public presentation materials to the Committee members, the Committee suggests that presenters forward the public presentation materials prior to the meeting to the following address: Ms. Lee Ann Carpenter, BXA MS:3886C, 15th St. & Pennsylvania Ave., N.W., U.S. Department of Commerce, Washington, D.C. 20230.

The Assistant Secretary for Administration, with the concurrence of the delegate of the General Counsel, formally determined on January 12, 1999, pursuant to Section 10(d) of the Federal Advisory Committee Act, as amended, that the series of meetings or portions of meetings of the Committee and of any Subcommittees thereof, dealing with the classified materials listed in 5 U.S.C. 552b(c)(1) shall be

exempt from the provisions relating to public meetings found in section 10(a)(1) and 10(a)(3) of the Federal Advisory Committee Act. The remaining series of meetings or portions thereof will be open to the public.

A copy of the Notice of Determination to close meetings or portions of meetings of the Committee is available for public inspection and copying in the Central Reference and Records Inspection Facility, Room 6020, U.S. Department of Commerce, Washington, D.C. For more information, call Lee Ann Carpenter at (202) 482–2583.

Dated: January 22, 1999.

Lee Ann Carpenter,

Committee Liaison Officer.

[FR Doc. 99–2004 Filed 1–27–99; 8:45 am]

BILLING CODE 3510–33–M

DEPARTMENT OF COMMERCE

International Trade Administration

[Docket No. 980930252–9012–02]

Special American Business Internship Training Program (SABIT)

AGENCY: International Trade Administration, Commerce.

ACTION: Notice of extension of funding availability for grants under the Special American Business Internship Training Program (SABIT).

SUMMARY: This Notice supplements the **Federal Register** Notice of November 6, 1998 (63 FR 59938–59941) announcing the availability of funds for the Special American Business Internship Training Program (SABIT), for training business executives (also referred to as ''interns'') from the Newly Independent States of the Former Soviet Union. All information in the previous announcement remains current, except for the changes to the closing date.

DATES: This Notice extends the closing date of the referenced Federal Register Notice for two months to 5 p.m. March 31, 1999. All awards are expected to be made prior to June 1, 1999.

FOR FURTHER INFORMATION CONTACT: Liesel Duhon, Director, Special American Business Internship Training Program, International Trade Administration, U.S. Department of Commerce, phone—(202) 482–0073, facsimile—(202) 482–2443. These are not toll free numbers.

Dated: January 21, 1999.

Liesel Duhon,

Director, SABIT Program.

[FR Doc. 99–2023 Filed 1–27–99; 8:45 am]

BILLING CODE 3510–HE–P

DEPARTMENT OF COMMERCE

International Trade Administration

North American Free Trade Agreement (NAFTA), Article 1904 Binational Panel Reviews: Notice of Termination of Panel Review

AGENCY: NAFTA Secretariat, United States Section, International Trade Administration, Department of Commerce.

ACTION: Notice of Termination of the Panel Review of the final antidumping duty determination made by the International Trade Administration in the administrative review, respecting Circular Welded Non-Alloy Steel Pipe and Tube From Mexico (Secretariat File No. USA–97–1904–06).

SUMMARY: Pursuant to the Notice of Consent Motion to Terminate the Panel Review by the Investigating Authority, the panel review is terminated as of January 13, 1999. Complaints were filed pursuant to Rule 39, Notices of Appearance were filed pursuant to Rule 40 and a panel has been appointed. All ''participants'' in this review as defined in Rule 3 of the *Rules of Procedure for Article 1904 Binational Panel Review* have consented to the motion for termination. Pursuant to Rule 71(2) of the *Rules of Procedure for Article 1904 Binational Panel Review,* this panel review is terminated.

FOR FURTHER INFORMATION CONTACT: James R. Holbein, United States Secretary, NAFTA Secretariat, Suite 2061, 14th and Constitution Avenue, Washington, D.C. 20230, (202) 482–5438.

SUPPLEMENTARY INFORMATION: Chapter 19 of the North American Free-Trade Agreement (''Agreement'') establishes a mechanism to replace domestic judicial review of final determinations in antidumping and countervailing duty cases involving imports from a NAFTA country with review by independent binational panels. When a Request for Panel Review is filed, a panel is established to act in place of national courts to review expeditiously the final determination to determine whether it conforms with the antidumping or countervailing duty law of the country that made the determination.

Under Article 1904 of the Agreement, which came into force on January 1, 1994, the Government of the United States, the Government of Canada and the Government of Mexico established *Rules of Procedure for Article 1904 Binational Panel Reviews* (''Rules''). These Rules were published in the **Federal Register** on February 23, 1994 (59 FR 8686). The panel review in this matter was requested and terminated pursuant to these Rules.

Dated: January 21, 1999.

James R. Holbein,

United States Secretary, NAFTA Secretariat.

[FR Doc. 99–2053 Filed 1–27–99; 8:45 am]

BILLING CODE 3510–GT–P

DEPARTMENT OF COMMERCE

International Trade Administration

United States-Canada Free-Trade Agreement, Article 1904 Binational Panel Reviews; Notice of Decision of Panel

AGENCY: North American Free-Trade Agreement (NAFTA) Secretariat, United States Section, International Trade Administration, Department of Commerce.

ACTION: Notice of Decision of Binational Panel.

SUMMARY: By an opinion dated January 20, 1999, the Binational Panel reviewing the final affirmative redetermination made by the International Trade Administration (ITA) respecting Certain Corrosion-Resistant Carbon Steel Products from Canada (Secretariat File No. USA–97–1904–03) remanded the September 4, 1998 redetermination to the ITA for further action. A copy of the complete panel decision is available from the NAFTA Secretariat.

FOR FURTHER INFORMATION CONTACT: James R. Holbein, United States Secretary, NAFTA Secretariat, Suite 2061, 14th and Constitution Avenue, Washington, D.C. 20230, (202) 482–5438.

SUPPLEMENTARY INFORMATION: Chapter 19 of the United States-Canada Free-Trade Agreement (''Agreement'') establishes a mechanism to replace domestic judicial review of final determinations in antidumping and countervailing duty cases involving imports from the other country with review by independent binational panels. When a Request for Panel Review is filed, a panel is established to act in place of national courts to review expeditiously the final determination to determine whether it conforms with the antidumping or countervailing duty law of the country that made the determination.

Under Article 1904 of the Agreement, which came into force on January 1, 1989, the Government of the United States and the Government of Canada established *Rules of Procedure for Article 1904 Binational Panel Reviews* (''Rules''). The Rules were published in

the **Federal Register** on December 30, 1988 (53 FR 53212). The Rules were amended by Amendments to the Rules of Procedure for Article 1904 Binational Panel Reviews, published in the **Federal Register** on December 27, 1989 (54 FR 53165). A consolidated version of the amended Rules was published in the **Federal Register** on June 15, 1992 (57 FR 26698). The Rules were further amended and published in the **Federal Register** on February 8, 1994 (59 FR 5892). The panel review in this matter was conducted in accordance with the Rules, as amended.

Panel Decision: On September 4, 1998, the International Trade Administration issued its Final Remand Determination in response to the Panel Decision.

Stelco filed comments objecting to this Determination on September 28, 1998, and requested the Panel to review the Department's Final Remand Determination.

On November 18, 1998, the Panel issued an order extending the date for issuance of the decision until January 18, 1999 and then to January 20, 1999. The Panel decision issued on January 20, 1999, remanded this matter to the Department of Commerce with the following instructions:

1. That the Department reconsider the costs associated with Baycoat's painting services to Stelco in a manner not inconsistent with the opinion.

2. That the Department will return a determination on remand within 60 days of the issuance of the Order (by March 22, 1999).

Dated: January 21, 1999.

James R. Holbein,

United States Secretary, NAFTA Secretariat.

[FR Doc. 99–2052 Filed 1–27–99; 8:45 am]

BILLING CODE 3510–GT–P

DEPARTMENT OF COMMERCE

International Trade Administration

North American Free Trade Agreement, Article 1904 Binational Panel Reviews: Notice of Completion of Panel Review

AGENCY: North American Free Trade Agreement, NAFTA Secretariat, United States Section, International Trade Administration, Department of Commerce.

ACTION: Notice of Completion of Panel Review of the final affirmative antidumping determination made by the U.S. International Trade Administration, in the matter of Gray Portland Cement and Clinker from Mexico, Secretariat File No. USA–97–1904–02.

SUMMARY: Pursuant to the Order of the Binational Panel dated December 4, 1998, affirming the final determination described above was completed on January 18, 1999.

FOR FURTHER INFORMATION CONTACT: James R. Holbein, United States Secretary, NAFTA Secretariat, Suite 2061, 14th and Constitution Avenue, Washington, D.C. 20230, (202) 482–5438.

SUPPLEMENTARY INFORMATION: On December 4, 1998, the Binational Panel issued an order which affirmed the final affirmative antidumping duty determination of the United States International Trade Administration (''ITA'') concerning Gray Portland Cement and Clinker from Mexico. The Secretariat was instructed to issue a Notice of Completion of Panel Review on the 31st day following the issuance of the Notice of Final Panel Action, if no Request for an Extraordinary Challenge was filed. No such request was filed. Therefore, on the basis of the Panel Order and Rule 80 of the *Article 1904 Panel Rules*, the Panel Review was completed and the panelists discharged from their duties effective January 18, 1999.

Dated: January 21, 1999.

James R. Holbein,

United States Secretary, NAFTA Secretariat.

[FR Doc. 99–2051 Filed 1–27–99; 8:45 am]

BILLING CODE 3510–GT–P

DEPARTMENT OF COMMERCE

International Trade Administration

Multi-Agency Business Development Infrastructure Mission to China and Hong Kong, and Business Development Mission to Korea; Correction

AGENCY: International Trade Administration, Commerce.

ACTION: Correction to 64 FR Notice.

This notice is to provide updated and corrected information for 64 FR 477–479 which appeared in the **Federal Register** on January 5, 1999. The notice announced the Multi-Agency Business Development Mission to China and Hong Kong and the Business Development Mission to Korea. The corrected information is as follows:

Change of Title:

Multi-Agency Business Development Mission to China and the Business Development Mission to Korea

Change of Dates for the Trade Missions:

Korea: March 25–27—Seoul

China: March 28–April 1—Beijing, Shanghai and Guangzhou

Application Deadline: The new deadline for applications is February 5, 1999.

Dated: January 22, 1999.

Lucie Naphin,

Director, Office of Business Liaison.

[FR Doc. 99–2021 Filed 1–27–99; 8:45 am]

BILLING CODE 3510–25–P

DEPARTMENT OF COMMERCE

National Oceanic and Atmospheric Administration

[I.D. 012299A]

Pacific Fishery Management Council; Public Meeting

AGENCY: National Marine Fisheries Service (NMFS), National Oceanic and Atmospheric Administration (NOAA), Commerce.

ACTION: Notice of public meeting.

SUMMARY: The Pacific Fishery Management Council's (Council) Salmon Technical Team (STT) will hold a work session which is open to the public.

DATES: The meeting will begin at 10:00 a.m. on Tuesday, February 16, 1999 and continue from approximately 8:00 a.m. to 5:00 p.m. each day through Friday, February 19, 1999.

ADDRESSES: The meeting will be held at the Council office in Portland, OR.

Council address: Pacific Fishery Management Council, 2130 SW Fifth Avenue, Suite 224, Portland, OR 97201.

FOR FURTHER INFORMATION CONTACT: Dr. John Coon, Salmon Management Coordinator; telephone: (503) 326–6352.

SUPPLEMENTARY INFORMATION: The purpose of the meeting, which is primarily a work session of the STT, is to draft the stock status report, ''Preseason Report 1: Stock Abundance Analysis for 1998 Ocean Salmon Fisheries''. The final report will be distributed to the public and reviewed by the Council at its March 1999 meeting in Portland, OR.

Although other issues not contained in this agenda may come before this group for discussion, in accordance with the Magnuson-Stevens Fishery Conservation and Management Act, those issues may not be the subject of formal action during this meeting. Action will be restricted to those issues specifically listed in this notice.

Special Accommodations

The meeting is physically accessible to people with disabilities. Requests for sign language interpretation or other auxiliary aids should be directed to Mr. John Rhoton at (503) 326–6352 at least 5 days prior to the meeting date.

Dated: January 22, 1999.

Richard W. Surdi,

Acting Director, Office of Sustainable Fisheries, National Marine Fisheries Service.

[FR Doc. 99–2048 Filed 1–27–99; 8:45 am]

BILLING CODE 3510–22–F

DEPARTMENT OF DEFENSE

Office of the Secretary

Ballistic Missile Defense Advisory Committee

ACTION: Notice of Advisory Committee Meeting.

SUMMARY: The Ballistic Missile Defense (BMD) Advisory Committee will meet in closed session in Colorado Springs, Colorado, on 18–19 February 1999.

The mission of the BMD Advisory Committee is to advise the Secretary of Defense and Deputy Secretary of Defense, through the Under Secretary of Defense (Acquisition and Technology), on all matters relating to BMD acquisition, system development, and technology.

In accordance with Section 10(d) of the Federal Advisory Committee Act, Public Law 92–463, as amended by 5 U.S.C., Appendix II, it is hereby determined that this BMD Advisory Committee meeting concerns matters listed in 5 U.S.C., 552b(c)(1), and that accordingly this meeting will be closed to the public.

Dated: January 25, 1999.

Linda M. Bynum,

OSD Federal Register Liaison Officer, Department of Defense.

[FR Doc. 99–2007 Filed 1–27–99; 8:45 am]

BILLING CODE 5000–04–M

DEPARTMENT OF DEFENSE

Department of the Army

Notice of Intent To Prepare an Environmental Assessment (EA) for the Disposal and Reuse of Excess Facilities at Fort Hunter Liggett, California

AGENCY: Department of the Army, DoD.

ACTION: Notice of intent.

SUMMARY: The Department of the Army will prepare an EA for the disposal and reuse of excess facilities at Fort Hunter Liggett, California.

The proposed action is to implement the recommendation of the 1995 Defense Base Closure and Realignment (BRAC) Commission under Public law 101–510 (as amended), the Defense Base Closure and Realignment Act of 1990, for Fort Hunter Liggett, California. The EA will address the direct and indirect environmental and socioeconomic effects associated with implementing the Commission's recommendation to retain minimum essential facilities and training area as an enclave to support the Reserve Components. Specifically, the EA will examine the effects associated with the disposal and reuse of approximately 139 acres, 63 buildings; and 86 family housing units at Fort Hunter Liggett, California.

ADDRESSES: Questions should be directed to Dr. Neil Robinson, U.S. Army Engineer District, Mobile (ATTN: CESAM–P–E), P.O. Box 2288, 109 St. Joseph Street, Mobile, Alabama 36602.

SUPPLEMENTARY INFORMATION: Opportunities for public participation will be announced in the local newspapers. Comments from the public will be considered before any action is taken to implement these disposal and reuse actions.

Dated: January 20, 1999.

Raymond J. Fatz,

Deputy Assistant Secretary of the Army (Environment, Safety and Occupational Health), OASA(I,L&E).

[FR Doc. 99–2016 1–27–99; 8:45 am]

BILLING CODE 3710–08–M

DEPARTMENT OF DEFENSE

Department of the Army

Notice of Intent To Prepare an Environmental Impact Statement (EIS) for the Disposal, Transfer or Retention of the Family Housing at Fort Buchanan, Puerto Rico

AGENCY: Department of the Army, DoD.

ACTION: Notice of intent.

SUMMARY: The Department of the Army will prepare an EIS for the disposal, transfer or retention of family housing at Fort Buchanan, Puerto Rico.

The proposed action is to implement the recommendation of the 1995 Defense Base Closure and Realignment (BRAC) Commission under Public Law 101–510 to dispose of family housing at Fort Buchanan, Puerto Rico.

ADDRESSES: Questions should be directed to Mr. Glen Coffee, U.S. Army Engineer District, Mobile (ATTN: CESAM–PD–EO, 109 St. Joseph Street, Mobile, Alabama 36602.

FOR FURTHER INFORMATION CONTACT: Mr. Glen Coffee at (334) 690–2729.

SUPPLEMENTARY INFORMATION: The EIS will address the environmental and socioeconomic effects associated with implementing the Commission's recommendation to dispose of the 361 units of family housing located in four housing areas on Fort Buchanan. The EIS will analyze the following alternatives for disposal, transfer or retention of the housing: reuse of the property by the local community; transfer of the family housing to other Federal agencies; demolition of some or all of the housing units; a commercial residential development alternative; a combination of these alternatives; and a no action alternative. Under the no action alternative, the Army will analyze the effects of retaining the housing to meet the Army's future housing needs. The no action alternative affords a baseline for comparison of no other alternatives. The Army, with the approval of the Secretary of Defense, could decide to retain some or all of the family housing. The Secretary of Defense has authority to do so under the 1999 Defense Appropriations Act.

A draft EIS will be published in 1999 and will be made available for a 45-day public comment period. The final EIS is expected to be published in 2000 and will be made available for public comment during a 30-day waiting period after its publication.

A public scoping meeting will be held in the San Juan-Fort Buchanan area with the time and place to be announced. Comments received will be used to assist the Army in developing issues and identifying potential impacts to the quality of the human environment.

Dated: January 20, 1999.

Raymond J. Fatz,

Deputy Assistant Secretary of the Army, (Environment, Safety and Occupational Health), OASA (I,L&E).

[FR Doc 99–2017 Filed 1–27–99; 8:45 am]

BILLING CODE 3710–08–M

DEPARTMENT OF DEFENSE

Department of the Army

Army Science Board; Notice of Partially Closed Meeting

In accordance with Section 10(a)(2) of the Federal Advisory Committee Act (P.L. 92–463), announcement is made of the following Committee Meeting:

Name of Committee: Army Science Board (ASB).

Date of Meeting: 16 and 17 February 1999.

Time of Meeting: 0800–1800 (both days).
Place: Arlington, VA.
Agenda: The Army Science Board's (ASB) Summer Study panel on ''Full Spectrum Protection for 2025-Era Ground Platforms'' will meet for briefings and discussions. This meeting will be open to the public. Any interested person may attend, appear before, or file statements with the committee at the time and manner permitted by the committee. The classified portion of this meeting will be closed to the public in accordance with Section 552b(c) of Title 5, U.S.C., specifically subparagraph (1) thereof, and Title 5, U.S.C., Appendix 2, subsection 10(d). For further information, please contact Jackie Ladd at (703) 604–7479.

Leonard Gliatta,

Colonel, GS, Army Science Board.

[FR Doc. 99–2044 Filed 1–27–99; 8:45 am]

BILLING CODE 3710–08–M

DEPARTMENT OF DEFENSE

Department of the Navy

Meeting of the Chief of Naval Operations (CNO) Executive Panel

AGENCY: Department of the Navy, DOD.

ACTION: Notice.

SUMMARY: The CNO's Executive Panel is to conduct the mid-term briefing of the Homeland Defense Task Force to the Chief of Naval Operations. This meeting will consist of discussions relating to proposed Navy involvement in the defense of the homeland. This will include a discussion on the implications of the Navy's role in National Missile Defense.

DATES: The meeting will be held on February 11, 1999 from 1:30 p.m. to 2:30 p.m.

ADDRESSES: The meeting will be held at the office of the Chief of Naval Operations, 2000 Navy Pentagon, Washington, DC 20350–2000.

FOR FURTHER INFORMATION CONCERNING THIS MEETING CONTACT: Lieutenant Commander Christopher Agan, CNO Executive Panel, 4401 Ford Avenue, Suite 601, Alexandria, Virginia 22302–0268, telephone number (703) 681–6205.

SUPPLEMENTARY INFORMATION: Pursuant to the provisions of the Federal Advisory Committee Act (5 U.S.C. App. 2). These matters constitute classified information that is specifically authorized by Executive Order to be kept secret in the interest of national defense and are, in fact, properly classified pursuant to such Executive Order. Accordingly, the Secretary of the Navy has determined in writing that the public interest requires that all sessions of the meeting be closed to the public because they will be concerned with matters listed in section 552b(c)(1) of title 5, United States Code.

Dated: January 20, 1999.

Ralph W. Corey,

Commander, Judge Advocate General's Corps, Federal Register Liaison Officer.

[FR Doc. 99–2042 Filed 1–27–99; 8:45 am]

BILLING CODE 3810–FF–P

DEPARTMENT OF EDUCATION

Impact Aid

AGENCY: Department of Education.

ACTION: Notice extending the application deadline date for Impact Aid fiscal year (FY) 1999 section 8002 grants and FY 2000 section 8003 grants.

SUMMARY: The Secretary extends the deadline date for the submission of applications for Impact Aid FY 1999 section 8002 grants and FY 2000 section 8003 grants to March 1, 1999. Impact Aid regulations at 34 CFR 222.3 specify that the annual application deadline is January 31. Due to unavoidable delays in the production and the distribution of the application packages, the Secretary extends the deadline for the potential applicants under sections 8002 and 8003 for Impact Aid assistance for the respective years specified. Section 8003 applicants should use a survey date for their student counts that is at least three days after the start of the 1998–99 school year and before the extended deadline of March 1, 1999.

EFFECTIVE DATE: This notice extending the application deadline date to March 1, 1999, for Impact Aid FY 1999 section 8002 grants and FY 2000 section 8003 grants is effective January 28, 1999.

DEADLINE DATE FOR TRANSMITTAL OF APPLICATIONS: : March 1, 1999. The Secretary will also accept and approve for payment any otherwise approvable application that is received on or before the 60th calendar day after March 1, 1999, which is April 30, 1999. However, any applicant meeting the conditions of the preceding sentence will have its payment reduced by 10 percent of the amount it would have received had its application been filed by March 1, 1999.

DEADLINE DATE FOR INTERGOVERNMENTAL REVIEW: The deadline date for the transmittal of comments on those applications by State educational agencies is March 16, 1999.

FOR APPLICATIONS OR INFORMATION CONTACT: Impact Aid Program, U.S. Department of Education, 400 Maryland Avenue SW, Washington, DC 20202–6244. Telephone: (202) 260–3858. Individuals who use a telecommunications device for the deaf (TDD) may call the Federal Information Relay Service (FIRS) at 1–800–877–8339 between 8 a.m. and 8 p.m., Eastern time, Monday through Friday.

Waiver of rulemaking: Currently, 34 CFR 222.3, which establishes the annual January 31 Impact Aid application deadline, is in effect. However, due to unavoidable delays in the production and distribution of the application packages, applicants may not have sufficient time to comply with that annual deadline. Because this amendment makes a procedural change for this year only as a result of unique circumstances, proposed rulemaking is not required under 5 U.S.C. 553(b)(A). In addition, the Secretary has determined under 5 U.S.C. 553(b)(B) that proposed rulemaking on this one-time suspension of the regulatory deadline date is impracticable, unnecessary, and contrary to the public interest.

Electronic Access to This Document

Anyone may view this document, as well as all other Department of Education documents published in the **Federal Register,** in text or portable document format (pdf) on the World Wide Web at either of the following sites:

http://ocfo.ed.gov//fedreg.hmt

http://www.ed.gov/news.html

To use the pdf you must have the Adobe Acrobat Reader Program with Search, which is available free at either of the previous sites. If you have questions about using the pdf, call the U.S. Government Printing Office toll free at 1–888–293–6498.

Anyone may also view these documents in text copy on an electronic bulletin board of the Department. Telephone: (202) 219–1511, or toll free 1–800–222–4922. The documents are located under Option G—Files/Announcements, Bulletins and Press Releases.

Note: The official version of a document is the document published in the **Federal Register.**

Program Authority: 20 U.S.C. 7705.

(Catalog of Federal Domestic Assistance Number 84.041)

Dated: January 22, 1999.

Richard W. Riley,

Secretary of Education.

[FR Doc. 99–2018 Filed 1–27–99; 8:45 am]

BILLING CODE 4000–01–M

DEPARTMENT OF EDUCATION

[CFDA No. 84.305T]

Office of Educational Research and Improvement (OERI); National Research Institutes' Field-Initiated Studies (FIS) Research Grant Program; Notice of Extension of Deadline for Receipt of Applications and Applications Availability Date for Fiscal Year 1999

On December 14, 1998, the Secretary published in the **Federal Register** (63 FR 68985) a notice inviting applications for new awards for fiscal year 1999 for the FIS Research Grant Program. The Secretary extends the *deadline date for the receipt of applications* for the OERI fiscal year 1999 FIS grants from February 19, 1999, to *March 26, 1999. Application packages* will be available on *January 29, 1999.*

FOR FURTHER INFORMATION OR APPLICATION: To request an application or to obtain further information, write to the Office of Educational Research and Improvement, U.S. Department of Education, 555 New Jersey Avenue, NW, Room 604, Washington, DC 20208, or contact Veda Bright by e-mail at veda__bright@ed.gov or by telephone at (202) 219–1935. Application packages will be available electronically on the World Wide Web at the following site: http://www.ed.gov/offices/OERI/FIS/

Individuals who use a telecommunications device for the deaf (TDD) may call the Federal Information Relay Service (FIRS) at 1–800–877–8339 between 8 a.m. and 8 p.m. Eastern time, Monday through Friday.

Individuals with disabilities may obtain this document in an alternate format (e.g., Braille, large print, audiotape, or computer diskette) on request to the contact person listed in the preceding paragraph. Individuals with disabilities may obtain a copy of the application package in an alternate format, also, by contacting that person. However, the Department is not able to reproduce in an alternate format the standard forms included in the application package.

Electronic Access to This Document

Anyone may view this document, as well as all other Department of Education documents published in the **Federal Register**, in text or portable document format (pdf) via the Internet at either of the following sites:

http://ocfo.ed.gov/fedreg.htm
http://www.ed.gov/news.html

To use the pdf you must have the Adobe Acrobat Reader Program with Search, which is available free at either of the previous sites. If you have questions about using the pdf, call the U.S. Government Printing Office at (202) 512–1530 or, toll free, at 1–888–293–6498.

Anyone may also view these documents in text copy only on an electronic bulletin board of the Department. Telephone: (202) 219–1511, or toll free, 1–800–222–4922. The documents are located under Option G—Files/Announcements, Bulletins and Press Releases.

Note: The official version of a document is the document published in the **Federal Register**.

Program Authority: 20 U.S.C. 6031(c)(2)(B)

Dated: January 25, 1999.

C. Kent McGuire,

Assistant Secretary for Educational Research and Improvement.

[FR Doc. 99–2128 Filed 1–27–99; 8:45 am]

BILLING CODE 4000–01–P

DEPARTMENT OF EDUCATION

[CFDA Nos.: 84.315A, 84.315B, 84.315C]

Capacity Building for Traditionally Underserved Populations; Notice Inviting Applications for New Awards for Fiscal Year (FY) 1999

Purpose of Program: To improve services provided under the Rehabilitation Act of 1973, as amended (Act), especially services provided to individuals from minority backgrounds, and to provide outreach and technical assistance to minority entities and Indian tribes to enhance their capacity and promote their participation in activities funded under the Act.

Eligible Applicants: State and public or private nonprofit agencies and organizations, including Indian tribes and institutions of higher education. For Absolute Priority 1 and Absolute Priority 2, only minority entities as defined in section 21(b)(5)(B) of the Act and Indian tribes are eligible to apply for funds (section 21(b)(2)(B)).

SUPPLEMENTARY INFORMATION: Three types of projects are announced for FY 1999 under this program, and they are authorized under section 21(b)(2)(B) and (b)(2)(C) of the Act.

The term ''minority entity'' is defined in section 21(b)(5)(B) of the Act to mean an entity that is a historically Black college or university, a Hispanic-serving institution of higher education, an American Indian tribal college or university, or another institution of higher education whose student minority enrollment is at least 50 percent.

Deadline for Transmittal of Applications: March 24, 1999.

Deadline for Intergovernmental Review: May 23, 1999.

Note: Assistance to federally recognized Indian tribes is excluded from coverage under 34 CFR Part 79 (Intergovernmental Review of Department of Education Programs and Activities).

Applications Available: January 28, 1999.

Available Funds: $2,000,000.

Maximum Awards: In no case does the Secretary make an award greater than the maximum amount listed for a single budget period of 12 months for each absolute priority. The Secretary rejects and does not consider an application that proposes a budget exceeding the following maximum amounts:

Absolute Priority 1 '' $150,000
Absolute Priority 2 '' $400,000
Absolute Priority 3 '' $200,000

Estimated Range of Awards: $120,000 to $400,000.

Absolute Priority 1 '' $120,000 to $150,000
Absolute Priority 2 '' $300,000 to $400,000
Absolute Priority 3 '' $150,000 to $200,000

Note: Applicants should apply for level funding for each project year.

Estimated Number of Awards: 12.

Absolute Priority 1—8
Absolute Priority 2—1
Absolute Priority 3—3

Note: The Department is not bound by any estimates in this notice.

Project Period: Up to 36 months.

Page Limit: Part III of the application, the application narrative, is where you, the applicant, address the selection criteria used by reviewers in evaluating the application. You must limit Part III to the equivalent of no more than 45 pages, using the following standards:

(1) A ''page'' is 8.5″ × 11″, on one side only with 1″ margins at the top, bottom, and both sides.

(2) You must double space (no more than three lines per vertical inch) all text in the application narrative, including titles, headings, footnotes, quotations, references, and captions, as well as all text in charts, tables, figures, and graphs.

If you use a proportional computer font, you may not use a font smaller than a 12-point font or an average character density greater than 18 characters per inch. If you use a nonproportional font or a typewriter, you may not use more than 12 characters per inch.

The page limit does not apply to Part I, the cover sheet; Part II, the budget

section, including the narrative budget justification; Part IV, the assurances and certifications; or the one-page abstract, the resumes, the bibliography, or the letters of support. However, you must include all of the application narrative in Part III.

If, in order to meet the page limit, you use print size, spacing, or margins smaller than the standards specified in this notice, we won't consider your application for funding.

Applicable Regulations: The Education Department General Administrative Regulations (EDGAR) in 34 CFR Parts 74, 75, 77, 79, 80, 81, 82, 85, and 86.

Note: The regulations in 34 CFR Part 79 apply to all applicants except federally recognized Indian tribes.

Note: The regulations in 34 CFR Part 86 apply to institutions of higher education only.

Priorities

Absolute Priority 1 (84.315A): Under 34 CFR 75.105(c)(3) and section 21(b)(2)(B) of the Act, the Secretary gives an absolute preference to applications from minority entities and Indian tribes that propose projects that would provide training, technical assistance, or related activities in order to improve services under the Act, especially services provided to individuals from minority backgrounds. The Secretary funds under this competition only applications that meet this absolute priority.

Invitational Priority: Within Absolute Priority 1, the Secretary is particularly interested in applications from minority entities that propose to do both of the following:

(A) Provide training, technical assistance, or related activities in order to improve the delivery of vocational rehabilitation services provided under the Act, especially services provided to individuals from minority backgrounds.

(B) Establish collaborative relationships and partnerships with community-based organizations, particularly those community-based organizations that provide services to individuals with disabilities from minority backgrounds.

However, under 34 CFR 75.105(c)(1) an application that meets this invitational priority does not receive competitive or absolute preference over other applications.

Approved applications from this competition also may be funded in FY 2000.

Absolute Priority 2 (84.315B): Under 34 CFR 75.105(c)(3) and section 21(b)(2)(B) of the Act, the Secretary gives an absolute preference to applications from minority entities and Indian tribes that propose projects that would improve services provided under the Act by providing training, technical assistance, or related activities to assist grantees funded under the Vocational Rehabilitation Service Projects for American Indians with Disabilities program (CFDA No. 84.250). The Secretary funds under this competition only applications that meet this absolute priority.

Absolute Priority 3 (84.315C): Under 34 CFR 75.105(c)(3) and section 21(b)(2)(C) of the Act, the Secretary gives an absolute preference to applications that propose projects that would provide outreach and technical assistance to minority entities and Indian tribes to promote their participation in activities funded under the Act, including assistance to enhance their capacity to carry out those activities. Projects may provide technical assistance to minority entities who are first-time recipients of grants funded under the Act in order to increase their capacity to carry out their grants. The Secretary funds under this competition only applications that meet this absolute priority.

Selection Criteria: In evaluating an application for a new grant under these competitions, the Secretary uses selection criteria chosen from the general selection criteria in 34 CFR 75.210 of EDGAR. The selection criteria to be used for these competitions will be provided in the application package for these competitions.

For Applications Contact: The Grants and Contracts Service Team (GCST), U.S. Department of Education, 400 Maryland Avenue, S.W. (Room 3317, Switzer Building), Washington, D.C. 20202–2649; Telephone (202) 205–8351. Individuals who use a telecommunications device for the deaf (TDD) may call the Federal Information Relay Service (FIRS) at 1–800–877–8339 between 8 a.m. and 8 p.m., Eastern time, Monday through Friday. The preferred method for requesting applications is to FAX your request to (202) 205–8717.

Individuals with disabilities may obtain a copy of the application package in an alternate format by contacting the GCST. However, the Department is not able to reproduce in an alternate format the standard forms included in the application package.

FOR FURTHER INFORMATION CONTACT: Ellen C. Chesley, U.S. Department of Education, 400 Maryland Avenue, S.W. (Room 3318 Switzer Building), Washington, D.C. 20202–2649. Telephone: (202) 205–9481. Individuals who use a telecommunications device for the deaf (TDD) may call the Federal Information Relay Service (FIRS) at 1–800–877–8339 between 8 a.m. and 8 p.m., Eastern time, Monday through Friday.

Individuals with disabilities may obtain this document in an alternate format (e.g., Braille, large print, audiotape, or computer diskette) on request to the contact person listed in the preceding paragraph.

Electronic Access to This Document

Anyone may view this document, as well as all other Department of Education documents published in the **Federal Register**, in text or portable document format (pdf) on the World Wide Web at either of the following sites:

http://ocfo.ed.gov/fedreg.htm
http://www.ed.gov/news.html

To use the pdf you must have the Adobe Acrobat Reader Program with Search, which is available free at either of the previous sites. If you have questions about using the pdf, call the U.S. Government Printing Office toll free at 1–888–293–6498.

Anyone may also view these documents in text copy only on an electronic bulletin board of the Department. Telephone: (202) 219–1511 or, toll free, 1–800–222–4922. The documents are located under Option G—Files/Announcements, Bulletin and Press Releases.

Note: The official version of a document is the document published in the **Federal Register**.

Program Authority: 29 U.S.C. 718b (Section 21 of the Rehabilitation Act of 1973, as amended).

Dated: January 22, 1999.

Judith E. Heumann,

Assistant Secretary for Special Education and Rehabilitative Services.

[FR Doc. 99–2019 Filed 1–27–99; 8:45 am]

BILLING CODE 4000–01–P

DEPARTMENT OF ENERGY

Federal Energy Regulatory Commission

[Docket No. IC99–516–000; FERC–516]

Proposed Information Collection and Request for Comments

January 22, 1999.

AGENCY: Federal Energy Regulatory Commission.

ACTION: Notice of proposed information collection and request for comments.

SUMMARY: In compliance with the requirements of Section 3506(c)(2)(a) of

the Paperwork Reduction Act of 1995 (Pub. L. No. 104–13), the Federal Energy Regulatory Commission (Commission) is soliciting public comments on the specific aspects of the information collection described below.

DATES: Consideration will be given to comments submitted on or before March 29, 1999.

ADDRESSES: Copies of the proposed collection of information can be obtained from and written comments may be submitted to the Federal Energy Regulatory Commission, Attn: Michael Miller, Office of the Chief Information Officer, CI–1, 888 First Street N.E., Washington, D.C. 20426.

FOR FURTHER INFORMATION CONTACT: Michael Miller may be reached by telephone at (202) 208–1415, by fax at (202) 273–0873, and by e-mail at michael.miller@ferc.fed.us.

SUPPLEMENTARY INFORMATION: The information collected under the requirements of FERC–516 ''Electric Rate Schedule Filings'' (OMB No. 1902–0096) is used by the Commission to carry out the general authority in Sections 15, 19, 20, 205, 206 and 207 of the Federal Power Act (FPA) (16 U.S.C. 808, 812, 813, 824d–f). A public utility must obtain Commission authorization for all rates and charges made, related contracts and service conditions, and for wholesale sales and transmission of energy in interstate commerce. The Commission is authorized to investigate the rates charged by public utilities subject to its jurisdiction. If after investigation the Commission determines that the rates, terms or conditions of service are ''unjust and unreasonable or unjustly discriminatory or unduly preferential,'' it is authorized to determine and prescribe the just and reasonable rates, terms or conditions. Either full or abbreviated cost data is required to support the proposed rate levels as part of the justification for the complete electric rate schedules. Submission of the information is necessary because of the complexity of the electric industry and the controversial nature of many of the elements of a utility's cost to provide service. Sufficient detail must be obtained for the Commission to make informed and equitable decisions concerning the appropriate level of rates, and to aid customers and other parties who may wish to challenge the rate proposed by the utility. The compliance with these requirements is mandatory. The reporting requirements are found at 18 CFR Parts 35 and 292.

Action: The Commission is requesting a three-year extension of the current expiration date, with no changes to the existing collection of data.

Burden Statement: Public reporting burden for this collection is estimated as:

Number of respondents annually (1)	Number of responses per respondent (2)	Average burden hours per response (3)	Total annual burden hours (1) × (2) × (3)
858	3.42	183	536,800

Over the last three years, the Commission has seen a dramatic increase in both the number of respondents and the number of filings as is shown in the figures above. A decrease in average burden hours per respondent is the result of a dramatic increase in tariff service agreement filings. These filings have very short preparation times and are so numerous that when combined with other more lengthy types of filings, the result is a significant reduction in the overall average burden hours per response. Overall, there is a slight reduction in the total annual burden hours.

Estimated total cost burden to respondents: 536,800 hours per year ÷ 2080 hours per year × $109,889 = $28,359,815. The cost per respondent is equal to $33,053.

The reporting burden includes the total time, effort, or financial resources expended to generate, maintain, retain, disclose, or provide the information including: (1) Reviewing instructions; (2) developing, acquiring, installing, and utilizing technology and systems for the purposes of collecting, validating, verifying, processing, maintaining, disclosing and providing information; (3) adjusting the existing ways to comply with any previously applicable instructions and requirements; (4) training personnel to respond to a collection of information; (5) searching data sources; (6) completing and reviewing the collection of information; and (7) transmitting, or otherwise disclosing the information.

The estimate of cost for respondents is based upon salaries for professional and clerical support, as well as direct and indirect overhead costs. Direct costs include all costs directly attributable to providing this information, such as administrative costs and the cost for information technology. Indirect or overhead costs are costs incurred by an organization in support of its mission. These costs apply to activities which benefit the whole organization rather than any one particular function or activity.

Comments are invited on: (1) whether the proposed collection of information is necessary for the proper performance of the functions of the Commission, including whether the information will have practical utility; (2) the accuracy of the agency's estimate of the burden of the proposed collection of information, including the validity of the methodology and assumptions used; (3) ways to enhance the quality, utility and clarity of the information to be collected; and (4) ways to minimize the burden of the collection of information on those who are to respond, including the use of appropriate automated, electronic, mechanical, or other technological collection techniques or other forms of information technology, *e.g.*, permitting electronic submission of responses.

David P. Boergers,

Secretary.

[FR Doc. 99–1957 Filed 1–27–99; 8:45 am]

BILLING CODE 6717–01–M

DEPARTMENT OF ENERGY

Federal Energy Regulatory Commission

[Docket No. RP99–205–000]

Equitrans, L.P.; Notice of Proposed Changes in FERC Gas Tariff

January 22, 1999.

Take notice that on January 20, 1999, Equitrans, L.P. (Equitrans), tendered for filing as part of its FERC Gas Tariff, First Revised Volume No. 1, the following tariff sheets, to become effective February 1, 1999:

Fourth Revised Sheet No. 251
Fourth Revised Sheet No. 300
Second Revised Sheet No. 301
Fifth Revised Sheet No. 314
Sixth Revised Sheet No. 321
Sixth Revised Sheet No. 329
Third Revised Sheet No. 353

Equitrans states that the purpose of this filing is to request the discontinuation of Equitrans' propriety Electronic Bulletin Board (EBB) and to

rely on its Internet Web site pursuant to Order No. 587–C to satisfy its obligations under the Commission's Regulation relating to EBBs.

Equitrans states that this filing revises Equitrans' General Terms and Conditions, Section 26 to state that Equitrans' EQUIPATH Electronic Communications System can be accessed via the Internet's World Wide Web @ www.equitrans.com. address. Equitrans proposes amendments to the Forms of Service Agreements to include reference to Equitrans' internet address. Also, the service request form is modified to request that customers include their e-mail address.

Any person desiring to be heard or to protest said filing should file a motion to intervene or a protest with the Federal Energy Regulatory Commission, 888 First Street, NE., Washington, DC 20426, in accordance with Sections 385.214 or 385.211 of the Commission's Rules and Regulations. All such motions or protests must be filed in accordance with Section 154.210 of the Commission's Regulations. Protests will be considered by the Commission in determining the appropriate action to be taken, but will not serve to make protestants parties to the proceedings. Any person wishing to become a party must file a motion to intervene. Copies of this filing are on file with the Commission and are available for public inspection in the Public Reference Room.

David P. Boergers,

Secretary.

[FR Doc. 99–1946 Filed 1–27–99; 8:45 am]

BILLING CODE 6717–01–M

DEPARTMENT OF ENERGY

Federal Energy Regulatory Commission

[Project No. 1981–010]

Octonto Electric Cooperative; Notice Rescinding Notice of Application Ready for Environmental Analysis and Soliciting Comments, Recommendations, Terms and Conditions, and Prescriptions

January 22, 1999.

On December 3, 1998, the Federal Energy Regulatory Commission (Commission) issued a Notice of Application Ready for Environmental Analysis and Soliciting Comments, Recommendations, Terms and Conditions, and Prescriptions, 63 FR 67875 (Dec. 9, 1998) for the Stiles Project (P–1981), located on the Oconto River, Oconto County, Wisconsin. Comments are due on February 3, 1999.

By letter dated January 5, 1999, the parties to an on-going settlement negotiation for the Stiles Project requested that the Commission rescind the December 3, 1998 Notice. The parties believe that the negotiation process will accomplish a comprehensive settlement of key issues. Consequently, the Commission rescinds the December 3, 1998 Notice.

David P. Boergers,

Secretary.

[FR Doc 99–1945 Filed 1–27–99; 8:45 am]

BILLING CODE 6717–01–M

DEPARTMENT OF ENERGY

Federal Energy Regulatory Commission

[Docket No. RP99–204–000]

Panhandle Eastern Pipe Line Company; Notice of Filing

January 22, 1999.

Take notice that on January 19, 1999, Panhandle Eastern Pipe Line Company (Panhandle) tendered for filing its reconciliation report in compliance with Article I, Section 3(e)(ii) of the May 22, 1995 Stipulation and Agreement in Docket No. RP94–325–000 (Settlement). The Settlement required the filing of a reconciliation report as soon as practicable following the termination of the Carryover GSR Settlement Interruptible Rate Component.

Panhandle states that pursuant to the Commission's November 28, 1997 order in Docket No. RP98–27–000 it established the Carryover GSR Settlement Interruptible Rate Component to be effective during the twelve month period commencing December 1, 1997. Panhandle further states that it filed on October 30, 1998 in Docket No. RP99–107–000 to suspend the Carryover GSR Settlement Interruptible Rate Component for services provided under Rate Schedules IT and EIT effective December 1, 1998. Panhandle's filing was approved by Commission letter order issued November 27, 1998.

Panhandle states that copies of this filing are being served on all parties to the proceeding in Docket No. RP94–325.

Any person desiring to be heard or to protest said filing should file a motion to intervene or a protest with the Federal Energy Regulatory Commission, 888 First Street, NE, Washington, DC 20426, in accordance with Sections 385.214 or 385.211 of the Commission's Rules and Regulations. All such motions or protests must be filed in accordance with Section 154.210 of the Commission's Regulations. Protests will be considered by the Commission in determining the appropriate action to be taken, but will not serve to make protestants parties to the proceedings. Any person wishing to become a party must file a motion to intervene. Copies of this filing are on file with the Commission and are available for public inspection in the Public Reference Room.

David P. Boergers,

Secretary.

[FR Doc. 99–1947 Filed 1–27–99; 8:45 am]

BILLING CODE 6717–01–M

DEPARTMENT OF ENERGY

Federal Energy Regulatory Commission

[Docket No. PR98–13–001]

The Peoples Gas Light and Coke Company; Notice of Revised Operating Statement

January 22, 1999.

Take notice that on January 7, 1999, The Peoples Gas Light and Coke Company (Peoples Gas) filed a revised Operating Statement pursuant to 18 CFR 284.224. The Operating Statement modifies the Operating Statement filed as Exhibit B to its petition for rate approval in PR98–13–000. The revised Operating Statement incorporates revisions to Peoples Gas' proposal to offer firm and interruptible storage services, limited parking and loaning service, title tracking service, charges for fuel retention, and other miscellaneous changes.

Any person desiring to be heard or to protest said filing should file a motion to intervene or a protest with the Federal Energy Regulatory Commission, 888 First Street, NE, Washington, DC 20426, in accordance with Sections 385.214 or 385.211 of the Commission's Rules and Regulations. All such motions or protests must be filed on or before January 29, 1999. Protests will be considered by the Commission in determining the appropriate action to be taken, but will not serve to make protestants parties to the proceedings. Any person wishing to become a party must file a motion to intervene. Copies of this filing are on file with the Commission and are available for public inspection in the Public Reference Room.

David P. Boergers,

Secretary.

[FR Doc. 99–1950 Filed 1–27–99; 8:45 am]

BILLING CODE 6717–01–M

DEPARTMENT OF ENERGY

Federal Energy Regulatory Commission

[Docket No. RP99–178–000]

TransColorado Gas Transmission Company; Notice of Technical Conference

January 22, 1999.

In the Commission's order issued on December 30, 1998, the Commission directed that a technical conference be held to address issues raised by the filing.

Take notice that the technical conference will be held on Thursday, February 11, 1999, at 10:00 a.m., in a room to the designated at the offices of the Federal Regulatory Commission, 888 First Street, NE, Washington, DC 20426.

All interested parties and Staff are permitted to attend.

David P. Boergers,

Secretary.

[FR Doc. 99–1949 Filed 1–27–99; 8:45 am]

BILLING CODE 6717–01–M

DEPARTMENT OF ENERGY

Federal Energy Regulatory Commission

[Docket No. RP99–203–000]

Williams Gas Pipelines Central, Inc.; Notice of Proposed Changes in FERC Gas Tariff

January 22, 1999.

Take notice that on January 19, 1999, Williams Gas Pipelines Central, Inc. (Williams), tendered for filing to become part of its FERC Gas Tariff, Original Volume No. 1, the following tariff sheet, with the proposed effective date of February 19, 1999:

First Revised Sheet No. 255

Williams states that this filing is being made in accordance with Section 154.204 of the Commission's regulations. Williams is proposing in this filing to eliminate the use of paper service agreements for temporary releases of capacity. The elimination of paper service agreements is being done at the request of customers and will reduce costs and provide efficiencies to both Williams and its customers. Paper service agreements will be required when the release is for the entire remaining term of all or a portion of the Releasing Shipper's capacity on Williams' system.

Williams states that a copy of its filing was served on all of Williams' jurisdictional customers and interested state commissions.

Any person desiring to be heard or to protest said filing should file a motion to intervene or a protest with the Federal Energy Regulatory Commission, 888 First Street, NE., Washington, DC 20426, in accordance with Sections 385.214 or 385.211 of the Commission's Rules and Regulations. All such motions or protests must be filed in accordance with Section 154.210 of the Commission's Regulations. Protests will be considered by the Commission in determining the appropriate action to be taken, but will not serve to make protestants parties to the proceedings. Any person wishing to become a party must file a motion to intervene. Copies of this filing are on file with the Commission and are available for public inspection in the Public Reference Room.

David P. Boergers,

Secretary.

[FR Doc. 99–1948 Filed 1–27–99; 8:45 am]

BILLING CODE 6717–01–M

DEPARTMENT OF ENERGY

Federal Energy Regulatory Commission

[Docket No. EG99–62–000, et al.]

AES Westover, L.L.C., et al.; Electric Rate and Corporate Regulation Filings

January 21, 1999.

Take notice that the following filings have been made with the Commission:

1. AES Westover, L.L.C.

[Docket No. EG99–62–000]

On January 19, 1999, AES Westover, L.L.C. (AES Westover), c/o Henry Aszklar, 1001 North 19th Street, Arlington, Virginia 22209, filed with the Federal Energy Regulatory Commission an application for determination of exempt wholesale generator status pursuant to Part 365 of the Commission's regulations.

AES Westover is a Delaware limited liability company. AES Westover intends to operate and maintain, under an operation and maintenance agreement, the generating station currently known as the Goudey Generating Station, 720 Riverside Drive, Johnson City, New York 13902, which is comprised of two pulverized coal units (Units 7 and 8) with a maximum aggregate generating capacity of 126 MW. Electricity generated by the facility will be sold at wholesale by AES Eastern Energy, L.P. to one or more power marketers, utilities, cooperatives, or other wholesalers.

Comment date: February 9, 1999, in accordance with Standard Paragraph E at the end of this notice. The Commission will limit its consideration of comments to those that concern the adequacy or accuracy of the application.

2. AES Somerset, L.L.C.

[Docket No. EG99–63–000]

On January 19, 1999, AES Somerset, L.L.C. (AES Somerset), c/o Henry Aszklar, 1001 North 19th Street, Arlington, Virginia 22209, filed with the Federal Energy Regulatory Commission an application for determination of exempt wholesale generator status pursuant to Part 365 of the Commission's regulations.

AES Somerset is a Delaware limited liability company. AES Somerset intends to operate and maintain, under an operation and maintenance agreement, the generating station currently known as the Kintigh Generating Station, 7725 Lake Road, Barker, New York 14012, which is comprised of a steam turbine generating unit (Unit 1), which provides a maximum of 688 MW of generating capacity. Electricity generated by the facility will be sold at wholesale by AES Eastern to one or more power marketers, utilities, cooperatives, or other wholesalers.

Comment date: February 9, 1999, in accordance with Standard Paragraph E at the end of this notice. The Commission will limit its consideration of comments to those that concern the adequacy or accuracy of the application.

3. AES Greenidge, L.L.C.

[Docket No. EG99–64–000]

On January 19, 1999, AES Greenidge, L.L.C. (AES Greenidge), c/o Henry Aszklar, 1001 North 19th Street, Arlington, Virginia 22209, filed with the Federal Energy Regulatory Commission an application for determination of exempt wholesale generator status pursuant to Part 365 of the Commission's regulations.

AES Greenidge is a Delaware limited liability company. AES Greenidge intends to operate and maintain, under an operation and maintenance agreement, the generating station currently known as the Greenidge Station, Route 14, Dresden, New York 14441, which is comprised of two steam turbine units (Units 1 and 2) with a maximum aggregate generating capacity of 85 MW. Electricity generated by the facility will be sold at wholesale by AES Eastern Energy, L.P., to one or more power marketers, utilities, cooperatives, or other wholesalers.

Comment date: February 9, 1999, in accordance with Standard Paragraph E at the end of this notice. The

Commission will limit its consideration of comments to those that concern the adequacy or accuracy of the application.

4. AES Cayuga, L.L.C.

[Docket No. EG99–65–000]

On January 19, 1999, AES Cayuga, L.L.C. (AES Cayuga), c/o Henry Aszklar, 1001 North 19th Street, Arlington, Virginia 22209, filed with the Federal Energy Regulatory Commission an application for determination of exempt wholesale generator status pursuant to Part 365 of the Commission's regulations.

AES Cayuga is a Delaware limited liability company. AES Cayuga intends to operate and maintain, under an operation and maintenance agreement, the generating station currently known as the Milliken Generating Station, 228 Milliken Road, Lansing, New York 14882, which is comprised of two steam turbine generating units (Units 1 and 2) which provide a maximum of 305 megawatts (MW) of generating capacity. Electricity generated by the facility will be sold at wholesale by AES Eastern to one or more power marketers, utilities, cooperatives, or other wholesalers.

Comment date: February 9, 1999, in accordance with Standard Paragraph E at the end of this notice. The Commission will limit its consideration of comments to those that concern the adequacy or accuracy of the application.

5. American Electric Power Company

[Docket No. ER98–2786–002]

Take notice that on January 14, 1999, American Electric Power Company and Central and South West Corporation tendered for filing a revision to the credit worthiness provisions of their Open Access Transmission Tariff filed in Docket No. ER98–2786–000. The filing modifies the compliance filing that the companies made on December 10, 1998.

A copy of this filing has been served on the persons listed on the official service list in this docket.

Comment date: February 16, 1999, in accordance with Standard Paragraph E at the end of this notice.

6. UtiliCorp United, Inc.

[Docket No. ER99–1316–000]

Take notice that on January 15, 1999, UtiliCorp United, Inc. (UtiliCorp), for its operating divisions, Missouri Public Service (MPS), WestPlains Energy-Kansas (WPE–KS) and WestPlains Energy-Colorado (WPE–CO), tendered for filing notices of cancellation of the umbrella non-firm point-to-point transmission service agreements between MPS, WPE–KS and WPE–CO and Vastar Power Marketing, Inc. The cancellation is at the request of Vastar Power Marketing, Inc.

MPS, WPE–KS, and WPE–CO request an effective date of January 15, 1999, for the notices of cancellation. Accordingly, MPS, WPE–KS, and WPE–CO request waiver of the Commission's Regulations. MPS, WPE–KS and WPE–CO state that a copy of the filing has been served on Vastar Power Marketing, Inc.

Comment date: February 4, 1999, in accordance with Standard Paragraph E at the end of this notice.

7. Western Resources, Inc.

[Docket No. ER99–1317–000]

Take notice that on January 15, 1999, Western Resources, Inc., tendered for filing a letter stating that it is adopting the NERC TLR Alternative Transmission Tariff Amendment approved by the Commission on December 16, 1998 in Docket No. EL98–52–000 and that therefore Western Resources' FERC Electric Tariff, First Revised Volume No. 5, shall be considered to be so modified to reflect the generic amendment described in the Commission's Order.

The effective date of this modification shall be December 16, 1998.

A copy of the letter was served upon the Kansas Corporation Commission.

Comment date: February 4, 1999, in accordance with Standard Paragraph E at the end of this notice.

8. FirstEnergy Operating Companies

[Docket No. ER99–1318–000]

Take notice that on January 15, 1999, the FirstEnergy Operating Companies, in accordance with the Commission's Order On Petition For Declaratory Order issued December 16, 1998 in this docket, 85 FERC ¶ 61,353, tendered for filing notification that they use the Transmission Line Relief (TLR) procedures of the North American Electric Reliability Council (NERC) and that FirstEnergy's Open Access Transmission Tariff should be considered modified by NERC's TLR procedures filed in Docket No. EL98–52–000 on October 7, 1998 in red-lined form.

Comment date: February 4, 1999, in accordance with Standard Paragraph E at the end of this notice.

9. WPS Resources Corporation

[Docket No. ER99–1319–000]

Take notice that on January 15, 1999, WPS Resources Corporation, on behalf of its respective public utility subsidiaries, Wisconsin Public Service Corporation and Upper Peninsula Power Company, tendered for filing notification that its public utility subsidiaries use the NERC TLR procedures and that its pro forma tariff should be modified to reflect the generic tariff amendment filed by NERC.

Comment date: February 4, 1999, in accordance with Standard Paragraph E at the end of this notice.

10. Virginia Electric and Power Company

[Docket No. ER99–1320–000]

Take notice that on January 15, 1999, Virginia Electric and Power Company tendered for filing notification that it uses the NERC TLR procedures referred to in the EL98–52–000, proceeding and that its pro forma tariff should be modified to reflect the generic tariff amendment filed by NERC.

Comment date: February 4, 1999, in accordance with Standard Paragraph E at the end of this notice.

11. Florida Power Corporation

[Docket No. ER99–1321–000]

Take notice that on January 15, 1999, in compliance with the Commission's December 16, 1998, Order in Docket No. EL98–52–000, Florida Power Corporation tendered for filing notification stating that it employs the North American Electric Reliability Council's Transmission Loading Relief Procedures.

Florida Power states that copies of its Notice have been served on all parties on the Commission's service list for this proceeding.

Comment date: February 4, 1999, in accordance with Standard Paragraph E at the end of this notice.

12. Cinergy Services, Inc.

[Docket No. ER99–1322–000]

Take notice that on January 15, 1999, Cinergy Services, Inc., on behalf of PSI Energy, Inc., and The Cincinnati Gas & Electric Company tendered for filing notification indicating that its open access transmission tariff should be considered modified by NERC's TLR Alternative Transmission Tariff Amendment.

Comment date: February 4, 1999, in accordance with Standard Paragraph E at the end of this notice.

13. Southwest Power Pool

[Docket No. ER99–1323–000]

Take notice that on January 15, 1999, Southwest Power Pool, on behalf of its transmission owning members, tendered for filing notice indicating that the SPP Open Access Transmission Tariff should be considered modified by North American Electric Reliability Council's TLR Alternative Transmission Tariff Amendment.

Comment date: February 4, 1999, in accordance with Standard Paragraph E at the end of this notice.

14. Electric Energy, Inc.

[Docket No. ER99–1324–000]

Take notice that on January 15, 1999, Electric Energy, Inc. (EEInc.), tendered for filing its Notice of Adoption of North American Electric Reliability Council Transmission Line Loading Relief procedures.

Comment date: February 4, 1999, in accordance with Standard Paragraph E at the end of this notice.

15. Northern Indiana Public Service Company

[Docket No. ER99–1325–000]

Take notice that on January 15, 1999, Northern Indiana Public Service Company (Northern Indiana), tendered for filing its Notice of Adoption of North American Electric Reliability Council Transmission Line Loading Relief procedures.

Copies of this filing have been sent to the Indiana Utility Regulatory Commission, the Indiana Office of Utility Consumer Counselor and all persons who have executed contracts with Northern Indiana pursuant to its Open Access Transmission Tariff.

Comment date: February 4, 1999, in accordance with Standard Paragraph E at the end of this notice.

16. Wolverine Power Supply Cooperative, Inc.

[Docket No. ER99–1326–000]

Take notice that on January 15, 1999, Wolverine Power Supply Cooperative, Inc. (Wolverine), tendered for filing a notice that it will use the North American Electric Reliability Council (NERC) Transmission Loading Relief (TLR) procedures. Pursuant to the order in North American Electric Reliability Council, 85 FERC ¶ 61,353 (1998), Wolverine further tendered for filing notice that Wolverine's open access transmission service tariff is modified to reflect the NERC generic amendment respecting TLR procedures.

Comment date: February 4, 1999, in accordance with Standard Paragraph E at the end of this notice.

17. East Texas Electric Cooperative, Inc.

[Docket No. ER99–1327–000]

Take notice that on January 15, 1999, East Texas Electric Cooperative, Inc. (ETEC), tendered for filing notification that it will use the North American Electric Reliability Council (NERC) Transmission Loading Relief (TLR) procedures. Pursuant to the order in North American Electric Reliability Council, 85 FERC ¶ 61,353 (1998), ETEC further tendered notice that ETEC's open access transmission service tariff is modified to reflect the NERC generic amendment respecting TLR procedures.

Comment date: February 4, 1999, in accordance with Standard Paragraph E at the end of this notice.

18. DukeSolutions, Inc.

[Docket No. ER99–1328–000]

Take notice that on January 15, 1999, DukeSolutions, Inc. (DukeSolutions), tendered for filing a letter from the Executive Committee of the Western Systems Power Pool (WSPP) indicating that DukeSolutions had completed all the steps for pool membership. DukeSolutions requests that the Commission amend the WSPP Agreement to include it as a member.

DukeSolutions requests an effective date of January 15, 1999, for the proposed amendment. Accordingly, DukeSolutions requests waiver of the Commission's notice requirements for good cause.

Copies of the filing were served upon the WSPP Executive Committee.

Comment date: February 4, 1999, in accordance with Standard Paragraph E at the end of this notice.

19. Bangor Hydro-Electric Company

[Docket No. ER99–1329–000]

Take notice that on January 15, 1999, Bangor Hydro-Electric Company, tendered for filing notice indicating that Bangor's Open Access Transmission Tariff should be considered modified by NERC's TLR Alternative Transmission Tariff Amendment.

Comment date: February 4, 1999, in accordance with Standard Paragraph E at the end of this notice.

20. Florida Power & Light Company

[Docket No. ER99–1330–000]

Take notice that on January 15, 1999, in compliance with the Commission's December 16, 1998, order in Docket No. ER99–1330-000, Florida Power & Light Company (FPL), tendered for filing notification stating that it employs the North American Reliability Council's Transmission Loading Relief Procedures.

FPL states that copies of its Notice have been served on all parties on the Commission's service list for this proceeding.

Comment date: February 4, 1999, in accordance with Standard Paragraph E at the end of this notice.

21. Illinois Power Company

[Docket No. ER99–1331–000]

Take notice that on January 15, 1999, Illinois Power Company tendered for filing two unexecuted agreements for the provision of Network Integration Transmission Service to Southern Illinois Power Cooperative: (1) a Service Agreement for Network Integration Transmission Service; and (2) a Network Operating Agreement.

Comment date: February 4, 1999, in accordance with Standard Paragraph E at the end of this notice.

22. Northwestern Public Service Company

[Docket No. ER99–1332–000]

Take notice that on January 15, 1999, Northwestern Public Service Company tendered for filing notification that Northwestern Public Service Company adopts the Mid-Continent Area Power Pool's Line Loading Relief Procedures (LLR), as amended to comply with the Commission's orders in Docket No. ER98–3709–000. Northwestern Public Service Company attached to its notice (i) LLR and (ii) modifications to its open access transmission tariff to incorporate LLR.

Comment date: February 4, 1999, in accordance with Standard Paragraph E at the end of this notice.

23. Midwest Independent Transmission System Operators, Inc.

[Docket No. ER99–1333–000]

Take notice that on January 15, 1999, the Midwest Independent Transmission System Operators, Inc. (Midwest ISO), on behalf of its transmission owning members, tendered for filing a notice indicating that the Midwest ISO Open Access Transmission Tariff should be considered modified by the North American Electric Reliability Council's TLR Alternative Transmission Tariff Amendment.

Comment date: February 4, 1999, in accordance with Standard Paragraph E at the end of this notice.

24. Alliant Services, Inc.

[Docket No. ER99–1334–000]

Take notice that on January 15, 1999, Alliant Services, Inc. tendered for filing an informational filing on behalf of IES Utilities Inc. (IES), Interstate Power Company (IPC) and Wisconsin Power and Light Company (WPL), in response to the Commission's order dated December 16, 1998, in North American Electric Reliability Council, Docket No. EL98–52–000 (NERC Order).

Alliant hereby provides notice that in accordance with the NERC Order it adopts MAPP's Line Loading Relief Procedures (LLR) for Alliant West and that Alliant's Open Access Transmission Tariff (OATT) on file with the Commission may be modified by the

generic amendment attached hereto, which reflects the changes to LLR approved by the Commission on December 18, 1998. Mid-Continent Area Power Pool, Docket No. ER98–3709–000, 85 FERC ¶ 61,352 (December 16, 1998), clarified, 85 FERC ¶ 61,396 (December 18, 1998) (conforming the nonfirm curtailment priorities of LLR to those set forth in the pro forma tariff). Alliant hereby provides notice that in accordance with the NERC Order it adopts NERC's Transmission Loading Relief Procedures (TLR) for Alliant East. In the event the Commission rejects MAPP's LLR, Alliant will adopt NERC's TLR for both Alliant-West and Alliant-East.

A copy of this filing has been served upon the Illinois Commerce Commission, the Minnesota Public Utilities Commission, the Iowa Department of Commerce, and the Public Service Commission of Wisconsin.

Comment date: February 4, 1999, in accordance with Standard Paragraph E at the end of this notice.

25. Cleco Corporation

[Docket No. ER99–1335–000]

Take notice that on January 15, 1999, Cleco Corporation, (Cleco), tendered for filing notice indicating that the Cleco Corporation open access transmission tariff should be considered modified by NERC's TLR Alternative Transmission Tariff Amendment noted as Attachment B in Docket No. EL98–52.

Comment date: February 4, 1999, in accordance with Standard Paragraph E at the end of this notice.

26. Central Vermont Public Service Corporation

[Docket No. ER99–1336–000]

Take notice that on January 15, 1999, Central Vermont Public Service Corporation tendered for filing notification that the ISO-New England, Inc., and the New England Power Pool are responsible for TLR procedures referred to in the above-captioned proceeding.

Comment date: February 4, 1999, in accordance with Standard Paragraph E at the end of this notice.

27. Boston Edison Company

[Docket No. ER99–1337–000]

Take notice that on January 15, 1999, Boston Edison Company tendered for filing notification that the ISO-New England, Inc., and the New England Power Pool are responsible for TLR procedures referred to in Docket No. EL98–52–000.

Comment date: February 4, 1999, in accordance with Standard Paragraph E at the end of this notice.

Standard Paragraphs

E. Any person desiring to be heard or to protest said filing should file a motion to intervene or protest with the Federal Energy Regulatory Commission, 888 First Street, N.E., Washington, D.C. 20426, in accordance with Rules 211 and 214 of the Commission's Rules of Practice and Procedure (18 CFR 385.211 and 18 CFR 385.214). All such motions or protests should be filed on or before the comment date. Protests will be considered by the Commission in determining the appropriate action to be taken, but will not serve to make protestants parties to the proceeding. Any person wishing to become a party must file a motion to intervene. Copies of these filings are on file with the Commission and are available for public inspection.

David P. Boergers,

Secretary.

[FR Doc. 99–1944 Filed 1–27–99; 8:45 am]

BILLING CODE 6717–01–P

DEPARTMENT OF ENERGY

Federal Energy Regulatory Commission

[Project No. 11282–001–RI]

Summit Hydropower, Incorporated; Notice of Availability of Final Environmental Assessment

January 22, 1999.

In accordance with the National Environmental Policy Act of 1969 and the Federal Regulatory Commission's (Commission's) regulations, 18 CFR Part 380 (Order No. 486, 52 F.R. 47897), the Office of Hydropower Licensing has reviewed the application for an original license for the Gainer Dam Hydroelectric Project, located in the town of Scituate, Providence County, Rhode Island, and has prepared a Final Environmental Assessment (FEA) for the project. In the FEA, the Commission's staff has analyzed the potential environmental effects of rehabilitating and enlarging an existing project and has concluded that approval of the project, as proposed with additional staff-recommended measures, would not constitute a major federal action significantly affecting the quality of the human environment.

Copies of the FEA are available for review in the Public Reference Branch, Room 2–A, of the Commission's offices at 888 First Street, N.E., Washington, D.C. 20426. The EA may also be viewed on the web at www.ferc.fed.us. Please call (202) 208–2222 for assistance.

David P. Boergers,

Secretary.

[FR Doc. 99–1956 Filed 1–27–99; 8:45 am]

BILLING CODE 6717–01–M

DEPARTMENT OF ENERGY

Federal Energy Regulatory Commission

[Docket No. CP99–21–000]

Northern Border Pipeline Company; Notice of Intent To Prepare an Environmental Assessment for the Proposed Project 2000 and Request for Comments on Environmental Issues

January 22, 1999.

The staff of the Federal Energy Regulatory Commission (FERC or Commission) will prepare an environmental assessment (EA) that will discuss the environmental impacts of the Project 2000 involving construction and operation of facilities by Northern Border Pipeline Company (Northern Border) in Montana, North Dakota, South Dakota, Minnesota, Iowa, Illinois, and Indiana.[1] These facilities would consist of about 34.4 miles of 36-inch-diameter pipeline, and about 53,000 horsepower (hp) of compression. This EA will be used by the Commission in its decision-making process to determine whether the project is in the public convenience and necessity. The application and other supplemental filings in this docket are available for viewing on the FERC Internet website (www.ferc.fed.us). Click on the ''RIMS'' link, select ''Docket #'' from the RIMS Menu, and follow the instructions.

Similarly, the ''CIPS'' link on the FERC Internet website provides access to the texts of formal documents issued by the Commission, such as orders, notices, and rulemakings. From the FERC Internet website, click on the ''CIPS'' link, select ''Docket #'' from the CIPS menu, and follow the instructions.

If you are a landowner receiving this notice, you may be contacted by a pipeline company representative about the acquisition of an easement to construct, operate, and maintain the proposed facilities. The pipeline company would seek to negotiate a mutually acceptable agreement. However, if the project is approved by the Commission, that approval conveys with it the right of eminent domain. Therefore, if easement negotiations fail

[1] Northern Border's application was filed with the Commission under Section 7 of the Natural Gas Act and Part 157 of the Commission's regulations.

to produce an agreement, the pipeline company could initiate condemnation proceedings in accordance with state law. A fact sheet addressing a number of typically asked questions, including the use of eminent domain, is attached to this notice as appendix 1.[2]

Summary of the Proposed Project

Northern Border requests authorization to:

- Construct about 34.4 miles of 36-inch-diameter pipeline from Manhattan, Illinois to North Hayden, Indiana;
- Construct two new compressor stations totaling 14,500 hp at existing sites in Johnson County, Iowa and Bureau County, Illinois;
- Increase compression totaling 38,500 hp at three existing compressor stations in Roosevelt County, Montana, McKenzie County, North Dakota, and Grundy County, Iowa;
- Construct a new meter station in Lake County, Indiana; and
- Construct four mainline valves and associated remote blow down valves in Will County, Illinois.

The location of the project facilities is shown in appendix 2.

Land Requirements for Construction

Construction of the proposed facilities would disturb about 574.3 acres of primarily agricultural land (including all extra work spaces). All facilities would be within or adjacent to existing rights-of-way. Following construction, about 209.9 acres would be maintained as new permanent pipeline right-of-way. About 44.1 acres would be retained for the aboveground facilities, including 43.0 acres already owned by Northern Border. All areas would be restored after construction, and areas not needed for aboveground facilities would return to their former use.

The EA Process

The National Environmental Policy Act (NEPA) requires the Commission to take into account the environmental impacts that could result from an action whenever it considers the issuance of a Certificate of Public Convenience and Necessity. NEPA also requires us to discover and address concerns the public may have about proposals. We call this ''scoping.'' The main goal of the scoping process is to focus the analysis in the EA on the important environmental issues. By this Notice of Intent, the Commission requests public comments on the scope of the issues it will address in the EA. All comments received are considered during the preparation of the EA. State and local government representatives are encouraged to notify their constituents of this proposed action and encourage them to comment on their areas of concern.

The EA will discuss impacts that could occur as a result of the construction and operation of the proposed project under these general headings:

- Geology and soils.
- Water resources, fisheries, and wetlands.
- Vegetation and wildlife.
- Endangered and threatened species.
- Public safety.
- Land use.
- Cultural resources.
- Air Quality and noise.
- Hazardous waste.

We will also evaluate possible alternatives to the proposed project or portions of the project, and make recommendations on how to lessen or avoid impacts on the various resource areas.

Our independent analysis of the issues will be in the EA. Depending on the comments received during the scoping process, the EA may be published and mailed to Federal, state, and local agencies, public interest groups, interested individuals, affected landowners, newspapers, libraries, and the Commission's official service list for this proceeding. A comment period will be allotted for review if the EA is published. We will consider all comments on the EA before we make our recommendations to the Commission.

To ensure your comments are considered, please carefully follow the instructions in the public participation section below.

Currently Identified Environmental Issues

We have already identified several issues that we think deserve attention based on a preliminary review of the proposed facilities and the environmental information provided by Northern Border. This preliminary list of issues may be changed based on your comments and our analysis.

- Five federally listed threatened or endangered species may occur in the proposed project area.
- The project would cross 14 perennial streams classified as warmwater fisheries.
- The project would cross 10 wetlands.
- The pipeline facilities would disturb about 485.6 acres of agricultural land.

Public Participation

You can make a difference by providing us with your specific comments or concerns about the project. By becoming a commentor, your concerns will be addressed in the EA and considered by the Commission. You should focus on the potential environmental effects of the proposal, alternatives to the proposal (including alternative locations/routes), and measures to avoid or lessen environmental impact. The more specific your comments, the more useful they will be. Please carefully follow these instructions to ensure that your comments are received in time and properly recorded:

- Send two copies of your letter to: David P. Boergers, Secretary, Federal Energy Regulatory Commission, 888 First St., N.E., Room 1A, Washington, DC 20426;
- Label one copy of the comments for the attention of the Environmental Review and Compliance Branch, PR–11.2;
- Reference Docket No. CP99–21–000; and
- Mail your comments so that they will be received in Washington, DC on or before February 22, 1999.

If you do not want to send comments at this time but still want to remain on our mailing list, please return the Information Request (appendix 4). If you do not return the Information Request, you will be taken off the mailing list.

Becoming an Intervenor

In addition to involvement in the EA scoping process, you may want to become an official party to the proceeding known as an ''intervenor''. Intervenors play a more formal role in the process. Among other things, intervenors have the right to receive copies of case-related Commission documents and filings by other intervenors. Likewise, each intervenor must provide 14 copies of its filings to the Secretary of the Commission and must send a copy of its filings to all other parties on the Commission's service list for this proceeding. If you want to become an intervenor you must file a motion to intervene according to Rule 214 of the Commission's Rules of Practice and Procedure (18 CFR 385.214) (see appendix 3). Only intervenors have the right to seek rehearing of the Commission's decision.

The date for filing timely motions to intervene in this proceeding has passed. Therefore, parties now seeking to file

[2] The appendices referenced in this notice are not being printed in the **Federal Register**. Copies are available from the Commission's Public Reference and Files Maintenance Branch, 888 First Street, N.E., Washington, D.C. 20426, or call (202) 208–1371. Copies of the appendices were sent to all those receiving this notice in the mail.

late interventions must show good cause, as required by section 385.214(b)(3), why this time limitation should be waived. Environmental issues have been viewed as good cause for late intervention. You do not need intervenor status to have your environmental comments considered.

Additional information about the proposed project is available from Mr. Paul McKee of the Commission's Office of External Affairs at (202) 208–1088 or on the FERC website (www.ferc.fed.us) using the ''RIMS'' link to information in this docket number. For assistance with access to RIMS, the RIMS helpline can be reached at (202) 208–2222. Access to the texts of formal documents issued by the Commission with regard to this docket, such as orders and notices, is also available on the FERC website using the ''CIPS'' link. For assistance with access to CIPS, the CIPS helpline can be reached at (202) 208–2474.

David P. Boergers,

Secretary.

[FR Doc. 99–1954 Filed 1–27–99; 8:45 am]

BILLING CODE 6717–01–M

DEPARTMENT OF ENERGY

Federal Energy Regulatory Commission

[Docket No. CP96–606–001]

Texas Eastern Transmission Corporation; Notice of Intent To Prepare an Environmental Assessment for the CNG Lease Expansion Project and Request for Comments on Environmental Issues

January 22, 1999.

The staff of the Federal Energy Regulatory Commission (FERC or Commission) will prepare an environmental assessment (EA) that will discuss the environmental impacts of the CNG Lease Expansion Project involving construction and operation of the facilities by Texas Eastern Transmission Corporation (Texas Eastern) in Westmoreland and Juniata Counties, Pennsylvania.[1] These facilities would consist of about 3.98 miles of 36-inch-diameter loop, aboveground facilities to connect the loop to an adjacent existing pipeline; and modifications at an existing compressor station. This EA will be used by the Commission in its decision-making process to determine whether the project is in the public convenience and necessity. The application and other supplemental filings in this docket are available for viewing on the FERC Internet website (www.ferc.fed.us). Click on the ''RIMS'' link, select ''Docket #'' from the RIMS Menu, and follow the instructions.

Similarly, the ''CIPS'' link on the FERC Internet website provides access to the texts of formal documents issued by the Commission, such as order, notices, and rulemakings. From the FERC Internet website, click on the ''CIPS'' link, select ''Docket #'' from the CIPS menu, and follow the instructions.

If you are a landowner receiving this notice, you may be contacted by a pipeline company representative about the acquisition of an easement to construct, operate, and maintain the proposed facilities. The pipeline company would seek to negotiate a mutually acceptable agreement. However, if the project is approved by the Commission, that approval conveys with it the right of eminent domain. Therefore, if easement negotiations fail to produce an agreement, the pipeline company could initiate condemnation proceedings in accordance with state law. A fact sheet addressing a number of typically asked questions, including the use of eminent domain, is attached to this notice as appendix 1.[2]

Summary of the Proposed Project

Texas Eastern wants to amend its certificate to change the facilities necessary to provide CNG Transmission Corporation (CNG) leased capacity in the CNG Lease Expansion Project. The facilities would provide up to 19,500 decatherms per day (Dth/d) of leased capacity to CNG. In addition, the facilities would provide up to 50,000 Dth/d of capacity on Texas Eastern's Penn-Jersey System. Texas Eastern seeks authority to:

- Construct 3.98 miles of 36-inch-diameter loop downstream of the Delmont Compressor Station from milepost (MP) 2.90 to MP 6.88 and aboveground facilities to connect the loop to the adjacent existing pipeline facilities in Westmoreland County, Pennsylvania; and
- Construct a 30-inch suction valve; remove a 12-inch valve; and install remote control capability on another 12-inch valve at its Perulack Compressor Station in Juniata County, Pennsylvania.

The location of the project facilities is shown in appendix 2.

Land Requirements for Construction

Construction of the proposed facilities would require about 29.9 acres of land. Following construction, about 12.1 acres would be maintained as new permanent right-of-way (ROW) and new aboveground facility sites. The remaining 17.8 acres of land would be restored and allowed to revert to its former use.

The EA Process

The National Environmental Policy Act (NEPA) requires the Commission to take into account the environmental impacts that could result from an action whenever it considers the issuance of a Certificate of Public Convenience and Necessity. NEPA also requires us to discover and address concerns the public may have about proposals. We call this ''scoping''. The main goal of the scoping process is to focus the analysis in the EA on the important environmental issues. By this Notice of Intent, the Commission requests public comments on the scope of the issues it will address in the EA. All comments received are considered during the preparation of the EA. State and local government representatives are encouraged to notify their constituents of this proposed action and encourage them to comment on their areas of concern.

The EA will discuss impacts that could occur as a result of the construction and operation of the proposed project under these general headings:

- Geology and soils
- Water resources, fisheries, and wetlands
- Vegetation and wildlife
- Endangered and threatened species
- Public safety
- Land use
- Cultutal resources
- Air quality and noise
- Hazardous waste

We will also evaluate possible alternatives to the proposed project or portions of the project, and make recommendation on how to lessen or avoid impacts on the various resource areas.

Our independent analysis of the issues will be in the EA. Depending on the comments received during the scoping process, the EA may be published and mailed to Federal, state, and local agencies, public interests groups, interested individuals, affected landowners, newspapers, libraries, and the Commission's official service list for this proceeding. A comment period will be allotted for review if the EA is published. We will consider all

---

[1] Texas Eastern's application was filed with the Commission under Section 7 of the Natural Gas Act and Part 157 of the Commission's regulations.

[2] The appendices referenced in this notice are not being printed in the **Federal Register**. Copies are available from the Commission's Public Reference and Files Maintenance Branch, 888 First Street, N.E., Washington, D.C. 20426, or call (202) 208–1371. Copies of the appendices were sent to all those receiving this notice in the mail.

comments on the EA before we make our recommendations to the Commission.

To ensure your comments are considered, please carefully follow the instructions in the public participation section on page 4 of this notice.

Currently Identified Environmental Issues

We have already identified several issues that we think deserve attention based on a preliminary review of the proposed facilities and the environmental information provided by Texas Eastern. This preliminary list of issues may be changed based on your comments and our analysis.

- Three streams would be crossed.
- Sixteen wetlands would be affected.
- About 43 percent of the land that would be affected by the project is forested.
- One residence would be located within 36 feet of the construction ROW near MP 3.71.
- The project would cross about 0.13 mile of land owned by the U.S. Army Corps of Engineers.

Public Participation

You can make a difference by providing us with your specific comments or concerns about the project. By becoming a commentor, your concerns will be addressed in the EA and considered by the Commission. You should focus on the potential environmental effects of the proposal, alternatives to the proposal (including alternative routes), and measures to avoid or lessen environmental impact. The more specific your comments, the more useful they will be. Please carefully follow these instructions to ensure that your comments are received in time and properly recorded:

- Send two copies of your letter to: David P. Boergers, Secretary, Federal Energy Regulatory Commission, 888 First St., N.E., Room 1A, Washington, DC 20426;
- Label one copy of the comments for the attention of the Environmental Review and Compliance Branch, PR–11.2;
- Reference Docket No. CP96–606–001; and
- Mail your comments so that they will be received in Washington, DC on or before February 22, 1999.

Becoming an Intervenor

In addition to involvement in the EA scoping process, you may want to become an official party to the proceeding known as an ''intervenor''. Intervenors play a more formal role in the process. Among other things, intervenors have the right to receive copies of case-related Commission documents and filings by other intervenors. Likewise, each intervenor must provide 14 copies of its filings to the Secretary of the Commission and must send a copy of its filings to all other parties on the Commission's service list for this proceeding. If you want to become an intervenor you must file a motion to intervene according to Rule 214 of the Commission's Rules of Practice and Procedure (18 CFR 385.214) (see appendix 3). Only intervenors have the right to seek rehearing of the Commission's decision.

The date for filing timely motions to intervene in this proceeding has passed. Therefore, parties now seeking to file late interventions must show good cause, as required by section 385.214(b)(3), why this time limitation should be waived. Environmental issues have been viewed as good cause for late intervention. You do not need intervenor status to have your environmental comments considered.

Additional information about the proposed project is available from Mr. Paul McKee of the Commission's Office of External Affairs at (202) 208–1088 or on the FERC website (www.ferc.fed.us) using the ''RIMS'' link to information in this docket number. For assistance with access to RIMS, the RIMS helpline can be reached at (202) 208–2222. Access to the texts of formal documents issued by the Commission with regard to this docket, such as orders and notices, is also available on the FERC website using the ''CIPS'' link. For assistance with access to CIPS, the CIPS helpline can be reached at (202) 208–2474.

David P. Boergers,

Secretary.

[FR Doc. 99–1955 Filed 1–27–99; 8:45 am]

BILLING 6717–01–M

DEPARTMENT OF ENERGY

Federal Energy Regulatory Commission

Notice of Amendment of License

January 22, 1999.

Take notice that the following hydroelectric application has been filed with the Commission and is available for public inspection:

a. Type of Application: Amendment of license.

b. Project No: 2170–010.

c. Date Filed: November 17, 1998.

d. Applicant: Chugach Electric Association, Inc.

e. Name of Project: Cooper Lake.

f. Location: On the Cooper Creek, Copper Lake, and Kenai Lake on Kenai Peninsula, in the vicinity of Cooper Landing, Alaska.

g. Filed Pursuant to: Federal Power Act, 16 U.S.C. 791(a)–825(r).

h. Applicant Contact: Burke Wick, Chugach Electric Association, Inc., 5601 Minnesota Drive, P.O. Box 196300, Anchorage, Alaska 99519–6300, Tel: (907) 563–7494.

i. FERC Contact: Mohamad Fayyad, (202) 219–2665.

j. Comment Date: March 1, 1999.

k. Description of Amendment: Licensee proposes to upgrade the two generating units of the project by replacing the turbines and rewinding the generators and auxiliary equipment. This upgrade would increase the projects installed capacity from 15 MW (2 units at 7.5 MW each) to 21.2 MW (2 units at 10.6 MW each). The new units would have a hydraulic capacity of 190 cfs each.

l. This notice also consists of the following standard paragraphs: B, C1, and D2.

B. Comments, Protests, or Motions to Intervene—Anyone may submit comments, a protest, or a motion to intervene in accordance with the requirements of Rules of Practice and Procedure, 18 CFR 385.210, .211, .214. In determining the appropriate action to take, the Commission will consider all protests or other comments filed, but only those who file a motion to intervene in accordance with the Commission's Rules may become a party to the proceeding. Any comments, protests, or motions to intervene must be received on or before the specified comment date for the particular application.

C1. Filing and Service of Responsive Documents—Any filings must bear in all capital letters the title ''COMMENTS'', ''RECOMMENDATIONS FOR TERMS AND CONDITIONS'', ''PROTEST'', OR ''MOTION TO INTERVENE'', as applicable, and the Project Number of the particular application to which the filing refers. Any of the above-named documents must be filed by providing the original and the number of copies provided by the Commission's regulations to: The Secretary, Federal Energy Regulatory Commission, 888 First Street, N.E., Washington, D.C. 20426. A copy of any motion to intervene must also be served upon each representative of the Applicant specified in the particular application.

D2. Agency Comments—Federal, state, and local agencies are invited to file comments on the described application. A copy of the application may be obtained by agencies directly from the Applicant. If an agency does

not file comments within the time specified for filing comments, it will be presumed to have no comments. One copy of an agency's comments must also be sent to the Applicant's representatives.

David P. Boergers,

Secretary.

[FR Doc. 99–1952 Filed 1–27–99; 8:45 am]

BILLING CODE 6717–01–M

DEPARTMENT OF ENERGY

Federal Energy Regulatory Commission

Notice of Application Ready for Environmental Analysis and Soliciting Comments, Recommendations, Terms and Conditions, and Prescriptions

January 22, 1999.

Take notice that the following hydroelectric application has been filed with the Commission and is available for public inspection:

a. Type of Application: New Minor License.

b. Project No.: 597–003.

c. Date filed: June 24, 1998.

d. Applicant: PacificCorp.

e. Name of Project: Stairs Hydroelectric Project.

f. Location: On Big Cottonwood Creek in Big Cottonwood Canyon, Salt Lake County, near the town of Sandy, about 15 miles southeast of downtown Salt Lake City, Utah. The project affects federal lands within the Wasatch-Cache National Forest.

g. Filed Pursuant to: Federal Power Act, 16 U.S.C. 791(a)–825(r).

h. Applicant Contact: Michael B. Burke, Project Manager, PacificCorp, 910 S.W. Sixth Avenue, 610PSB, Portland, Oregon, 97204, (503) 464–5344.

i. FERC Contact: Any questions on this notice should be addressed to Gaylord W. Hoisington, E-mail address gaylord.hoisington@ferc.fed.us, or telephone (202) 219–2756.

j. Deadline for filing comments, recommendations, terms and conditions, and prescriptions: 60 days from the issuance date of this notice.

All documents (original and eight copies) should be filed with: David P. Boergers, Secretary, Federal Energy Regulatory Commission, 888 First Street, NE, Washington, DC 20426.

The Commission's Rules of Practice and Procedure require all intervenors filing documents with the Commission to serve a copy of that document on each person whose name appears on the official service list for the project. Further, if an intervenor files comments or documents with the Commission relating to the merits of an issue that may affect the responsibilities of a particular resource agency, they must also serve a copy of the document on that resource agency.

k. Status of environmental analysis: This application has been accepted for filing and is ready for environmental analysis at this time.

l. Description of the Project: The existing project consists of: (1) a 150-foot-long and 35-foot-high earth-fill diversion dam; (2) a reinforced concrete spillway; (3) a reinforced concrete intake structure; (4) a 2,850-foot-long penstock; (5) a 100-foot-wide by 35-foot-long masonry powerhouse; (6) one Francis turbine generator with a rated capacity of 1,200 kilowatts; (7) a 7-foot-wide by 5.3-foot-deep reinforced concrete tailrace; and (8) other appurtenances. No new construction is planned.

m. Locations of the application: A copy of the application is available for inspection and reproduction at the Commission's Public Reference Room, located at 888 First Street, NE, Room 2A, Washington, DC 20426, or by calling (202) 208–1371. The application may be viewed on the web at www.ferc.fed.us. Call (202) 208–2222 for assistance. A copy is also available for inspection and reproduction at the address in item h above.

n. This notice also consists of the following standard paragraphs: B, and D6.

B. Comments, Protests, or Motions to Intervene—Anyone may submit comments, a protest, or a motion to intervene in accordance with the requirements of Rules of Practice and Procedure, 18 CFR 385.210, .211, .214. In determining the appropriate action to take, the Commission will consider all protests or other comments filed, but only those who file a motion to intervene in accordance with the Commission's rules may become a party to the proceeding. Any comments, protests, or motions to intervene must be received on or before the specified comment date for the particular application.

D6. Filing and Service of Responsive Documents—The application is ready for environmental analysis at this time, and the Commission is requesting comments, reply comments, recommendations, terms and conditions, and prescriptions.

The Commission directs, pursuant to Section 4.34(b) of the Regulations (see Order No. 533 issued May 8, 1991, 56 FR 23108, May 20, 1991) that all comments, recommendations, terms and conditions and prescriptions concerning the application be filed with the Commission within 60 days from the issuance date of this notice. All reply comments must be filed with the Commission within 105 days from the date of this notice.

Anyone may obtain an extension of time for these deadlines from the Commission only upon a showing of good cause or extraordinary circumstances in accordance with 18 CFR 385.2008.

All filings must (1) bear in all capital letters the title ''PROTEST'', ''MOTION TO INTERVENE'', ''COMMENTS'', ''REPLY COMMENTS'', ''RECOMMENDATIONS'', ''TERMS AND CONDITIONS'', or ''PRESCRIPTIONS''; (2) set forth in the heading the name of the applicant and the project number of the application to which the filing responds; (3) furnish the name, address, and telephone number of the person protesting or intervening; and (4) otherwise comply with the requirements of 18 CFR 385.2001 through 385.2005. All comments, recommendations, terms and conditions or prescriptions must set forth their evidentiary basis and otherwise comply with the requirements of 18 CFR 4.34(b). Agencies may obtain copies of the application directly from the applicant. Any of these documents must be filed by providing the original and the number of copies required by the Commission's regulations to: The Secretary, Federal Energy Regulatory Commission, 888 First Street, NE, Washington, DC 20426. An additional copy must be sent to Director, Division of Project Review, Office of Hydropower Licensing, Federal Energy Regulatory Commission, at the above address. A copy of any protest or motion to intervene must be served upon each representative of the applicant specified in the particular application. A copy of all other filings in reference to this application must be accompanied by proof of service on all persons listed in the service list prepared by the Commission in this proceeding, in accordance with 18 CFR 4.34(b) and 385.2010.

David P. Boergers,

Secretary.

[FR Doc. 99–1953 Filed 1–27–99; 8:45 am]

BILLING CODE 6717–01–M

DEPARTMENT OF ENERGY

Federal Energy Regulatory Commission

[Project No. 11282–001 Rhode Island]

Summit Hydropower; Notice Modifying and Establishing a Restricted Service List for Comments on a Programmatic Agreement for Managing Properties Included in or Eligible for Inclusion in the National Register of Historic Places

January 22, 1999.

On September 8, 1998, the Commission issued a notice for Project No. 11282 proposing to establish a restricted service list for the purpose of developing and executing a programmatic agreement for managing properties included in or eligible for inclusion in the National Register of Historic Places.

The existing project features—Scituate Reservoir, Gainer Dam, generating unit, powerhouse, meter chamber, and appurtenant structures—are owned by the Providence Water Supply Board. Construction, operation, and maintenance of the proposed project would directly affect all of these features.

Rule 2010 of the Commission's Rules of Practice and Procedure provides that, to eliminate unnecessary expense or improve administrative efficiency, the Secretary may establish a restricted service list for a particular phase or issue in a proceeding.[1] The restricted service list should contain the names of persons on the service list who, in the judgment of the decisional authority establishing the list, are active participants with respect to the phase or issue in the proceeding for which the list is established.

The following addition is made to the proposed restricted service list notice issued on September 8, 1998, for Project No. 11282: Providence Water Supply Board, 552 Academy Avenue, Providence, RI 02908.

Any person on the official service list for the above-captioned proceedings may request inclusion on the restricted service list, or may request that a restricted service list not be established, by filing a motion to that effect within 15 days of this notice date. An original and 8 copies of any such motion must be filed with the Secretary of the Commission (888 First Street, NE, Washington, DC 20426) and must be served on each person whose name appears on the official service list. If no such motions are filed, the restricted service list will be effective at the end of the 15-day period. Otherwise, a further notice will be issued ruling on the motion.

David P. Boergers,

Secretary.

[FR Doc. 99–1951 Filed 1–27–99; 8:45 am]

BILLING CODE 6717–01–M

[1] 18 CFR 385.2010.

ENVIRONMENTAL PROTECTION AGENCY

[OPPTS–140278; FRL–6057–2]

Access to Confidential Business Information by Tetra Tech

AGENCY: Environmental Protection Agency (EPA).

ACTION: Notice.

SUMMARY: EPA has authorized its contractor, Tetra Tech Environmental Management Inc. (Tetra Tech), of 200 Randolph Drive, Suite 4700, Chicago, Illinois, for access to information which has been submitted to EPA under all sections of the Toxic Substances Control Act (TSCA). Some of the information may be claimed or determined to be confidential business information (CBI).

DATES: Access to confidential data submitted to EPA will occur no sooner than February 8, 1999.

FOR FURTHER INFORMATION CONTACT: Susan Hazen, Director, Environmental Assistance Division (7408), Office of Pollution Prevention and Toxics, Environmental Protection Agency, Rm. E–545, 401 M St., SW., Washington, DC 20460, (202) 554–1404, TDD: (202) 554–0551; e-mail: TSCA-Hotline@epamail.epa.gov.

SUPPLEMENTARY INFORMATION: Under contract number 68–W–99–008, Tetra Tech, of 200 East Randolph Drive, Chicago, IL, will assist the Office of Waste and Chemicals Management and Regional Offices RCRA Enforcement, Permitting and Assistance Programs in implementing the requirements of RCRA, as amended and future amendments. The major areas of support include enforcement, permitting activities, Subtitle D solid waste, corrective action, and RCRA program planning. Other areas of support include underground storage tanks, biennial reporting, waste minimization, and state and tribal assistance.

In accordance with 40 CFR 2.306(j), EPA has determined that under EPA contract number 68–W–99–008, Tetra Tech will require access to CBI submitted to EPA under all sections of TSCA to perform successfully the duties specified under the contract. Tetra Tech personnel will be given access to information submitted to EPA under all sections of TSCA. Some of the information may be claimed or determined to be CBI.

EPA is issuing this notice to inform all submitters of information under all sections of TSCA that EPA may provide Tetra Tech access to these CBI materials on a need-to-know basis only. All access to TSCA CBI under this contract will take place at Tetra Tech facilities located at 200 East Randolph Drive, Suite 4700, Chicago, IL; One Union Square, 600 University St., Suite 800, Seattle, WA; 1 Dallas Center, 350 North St. Paul St., Suite 2600, Dallas, TX; and 1099 18th St., Suite 1960, Denver, CO.

Tetra Tech will be authorized access to TSCA CBI at their facilities, provided they comply with the provisions of the EPA *TSCA Confidential Business Information Security Manual.*

Before access to TSCA CBI is authorized at Tetra Tech's sites, EPA will perform the required inspection of its facilities, and ensure that these facilities are in compliance with the Manual. Upon completing review of the CBI materials, Tetra Tech will return all transferred materials to EPA.

Clearance for access to TSCA CBI under this contract may continue until December 31, 2001.

Tetra Tech personnel will be required to sign nondisclosure agreements and will be briefed on appropriate security procedures before they are permitted access to TSCA CBI.

List of Subjects

Environmental protection, Access to confidential business information.

Dated: January 15, 1999.

Oscar Morales,

Acting Director, Information Management Division, Office of Pollution and Prevention and Toxics.

[FR Doc. 99–1903 Filed 1–27–99; 8:45 am]

BILLING CODE 6560–50–F

ENVIRONMENTAL PROTECTION AGENCY

[FRL–6226–3]

Notice of Meetings, Open to the Public, of the Multi-Agency Radiation Laboratory Protocols Manual Development Working Group

AGENCY: Environmental Protection Agency, lead.

ACTION: Meetings open to the public.

SUMMARY: The Environmental Protection Agency (EPA) is announcing that the

Department of Defense, Department of Energy, Environmental Protection Agency, Food and Drug Administration, National Institute of Standards and Technology, Nuclear Regulatory Commission, and U.S. Geological Survey are meeting to develop a joint interagency guidance manual for programs and laboratories to use when planning and implementing the analysis of environmental samples for radioactivity. The manual uses a performance based approach and will provide guidance to both project planners and laboratory personnel. The guidance is being developed as a draft document, entitled the Multi-Agency Radiation Laboratory Protocols (MARLAP) Manual, and it is anticipated that the final product will be a consensus document each agency can agree upon and adopt. Meetings of the group are open to the public on a first come, space available basis with advance registration. The agenda for this meeting will be available on the appropriate INTERNET sites listed below.

DATES, ADDRESS, AND REGISTRATION: A meeting will be held on February 8, 9, 10, from 9:00 AM until 5:30 PM and on February 11 from 8:30 AM until 12:30 PM. The meeting will be held at the National Institute of Standards and Technology (NIST), Gaithersburg, MD, Building 245, Room C–301. Persons wishing to attend this meeting should contact Kenneth Inn at 301–975–5541 to register. The schedule, location, and registration information for future meetings will be posted at the following INTERNET sites:

EPA *http://www.epa.gov/radiation/marlap*

DOD *http://chppm-www.apgea.army.mil/dls/marlap.htm*.

DOE *http://www.em.doe.gov/namp* (National Analytical Management Program, Office of Site Operations, EM–70)

DOE *http://tis.eh.doe.gov/oepa* (Office of Environmental Policy and Assistance, EH–41)

NRC *http://www.nrc.gov/NRC/PUBLIC/meet.html#OTHER*

FOR FURTHER INFORMATION CONTACT: Persons needing further information concerning this group and the work of developing the Multi-Agency Radiation Laboratory Protocols Manual should contact John Griggs, U.S. Environmental Protection Agency/ORIA, 540 South Morris Avenue, Montgomery, AL 36115–2601, (334) 270–3450.

Dated: January 21, 1999.

Larry Weinstock,

Director, Radiation Protection Division, EPA Office of Radiation and Indoor Air.

[FR Doc. 99–1914 Filed 1–27–99; 8:45 am]

BILLING CODE 6560–50–P

ENVIRONMENTAL PROTECTION AGENCY

[FRL–6225–7]

National Environmental Justice Advisory Council Workgroup on Waste Transfer Stations; Notice of Public Meeting

AGENCY: Environmental Protection Agency.

ACTION: Notice of public meeting.

SUMMARY: The National Environmental Justice Advisory Council (NEJAC) working group on Waste Transfer Stations (WTS) and the United States Environmental Protection Agency (EPA) is sponsoring a meeting in Washington, DC on February 17, 1999. The purpose of the meeting is for the working group to gather information related to potential environmental issues related to Waste Transfer Stations nationwide. Information gathered from these hearings will be gathered in a report for recommendations to EPA from the NEJAC.

The WTS working group was formed after a NEJAC resolution calling for EPA to ''examine the risks from the siting and operation of Waste Transfer Stations for the purpose of determining its regulatory responsibilities and prescribe requirements to reduce health risks associated with such facilities.'' The WTS working group consists of representatives of community based organizations, business interests, and elected officials from impacted communities for the purposes of advising on the design and implementation of the WTS study.

To examine waste transfer stations in New York, the working group hosted a fact-finding meeting in New York on November 10, 1998. The Washington, DC meeting will be held on February 17, 1999 at the Washington Convention Center from 8:30 to 5:30. The Washington Convention Center is located at 900 Ninth Street, NW, Washington, DC.

FOR FURTHER INFORMATION CONTACT: Please call Kent Benjamin, Office of Solid Waste and Emergency Response at (202) 260–2822 or Nancy Wilson, Office of Solid Waste and Emergency Response at (202) 260–1910 for more information.

Dated: January 21, 1999.

Linda Garczynski,

Director, Outreach and Special Projects, Office of Solid Waste and Emergency Response.

[FR Doc. 99–1905 Filed 1–27–99; 8:45 am]

BILLING CODE 6560–50–P

ENVIRONMENTAL PROTECTION AGENCY

[PF–854; FRL–6056–3]

AgrEvo USA Company; Pesticide Tolerance Petition Filing

AGENCY: Environmental Protection Agency (EPA).

ACTION: Notice.

SUMMARY: This notice announces the initial filing of a pesticide petition proposing the establishment of regulations for residues of a certain pesticide chemical in or on various food commodities.

DATES: Comments, identified by the docket control number PF–854, must be received on or before March 1, 1999.

ADDRESSES: By mail submit written comments to: Information and Records Integrity Branch, Public Information and Services Divison (7502C), Office of Pesticides Programs, Environmental Protection Agency, 401 M St., SW., Washington, DC 20460. In person bring comments to: Rm. 119, CM #2, 1921 Jefferson Davis Highway, Arlington, VA.

Comments and data may also be submitted electronically by following the instructions under ''SUPPLEMENTARY INFORMATION.'' No confidential business information should be submitted through e-mail.

Information submitted as a comment concerning this document may be claimed confidential by marking any part or all of that information as ''Confidential Business Information'' (CBI). CBI should not be submitted through e-mail. Information marked as CBI will not be disclosed except in accordance with procedures set forth in 40 CFR part 2. A copy of the comment that does not contain CBI must be submitted for inclusion in the public record. Information not marked confidential may be disclosed publicly by EPA without prior notice. All written comments will be available for public inspection in Rm. 119 at the address given above, from 8:30 a.m. to 4 p.m., Monday through Friday, excluding legal holidays.

FOR FURTHER INFORMATION CONTACT: Peg Perreault, Registration Support Branch, Registration Division (7505C), Office of Pesticide Programs, Environmental Protection Agency, 401 M St., SW,

Washington, DC 20460. Office location, telephone number, and e-mail address: Rm. 207, Crystal Mall #2, 1921 Jefferson Davis Highway, Arlington, VA 22202, (703) 305–5417; e-mail: perreault.peg@epamail.epa.gov.

SUPPLEMENTARY INFORMATION: EPA has received a pesticide petition as follows proposing the establishment and/or amendment of regulations for residues of certain pesticide chemical in or on various food commodities under section 408 of the Federal Food, Drug, and Comestic Act (FFDCA), 21 U.S.C. 346a. EPA has determined that this petition contains data or information regarding the elements set forth in section 408(d)(2); however, EPA has not fully evaluated the sufficiency of the submitted data at this time or whether the data supports granting of the petition. Additional data may be needed before EPA rules on the petition.

The official record for this notice of filing, as well as the public version, has been established for this notice of filing under docket control number [PF–854] (including comments and data submitted electronically as described below). A public version of this record, including printed, paper versions of electronic comments, which does not include any information claimed as CBI, is available for inspection from 8:30 a.m. to 4 p.m., Monday through Friday, excluding legal holidays. The official record is located at the address in ''ADDRESSES'' at the beginning of this document.

Electronic comments can be sent directly to EPA at:

opp-docket@epamail.epa.gov

Electronic comments must be submitted as an ASCII file avoiding the use of special characters and any form of encryption. Comment and data will also be accepted on disks in Wordperfect 5.1/6.1 file format or ASCII file format. All comments and data in electronic form must be identified by the docket control number (PF–854) and appropriate petition number. Electronic comments on this notice may be filed online at many Federal Depository Libraries.

List of Subjects

Environmental protection, Agricultural commodities, Food additives, Feed additives, Pesticides and pests, Reporting and recordkeeping requirements.

Dated: January 19, 1999.

James Jones,

Director, Registration Division, Office of Pesticide Programs.

Summary of Petition

The petitioner summary of the pesticide petition is printed below as required by section 408(d)(3) of the FFDCA. The summary of the petition was prepared by the petitioner and represents the views of the petitioner. EPA is publishing the petition summaries verbatim without editing them in any way. The petition summary announces the availability of a description of the analytical methods available to EPA for the detection and measurement of the pesticide chemical residues or an explanation of why no such method is needed.

AgrEvo USA Company

PP 9F3705 and 9H5572

EPA has received pesticide petitions (PP 9F3705 and 9H5572) from AgrEvo USA Company, Little Falls Center One, 2711 Centerville Road, Wilmington, DE 19808, proposing pursuant to section 408(d) of the Federal Food, Drug, and Cosmetic Act, 21 U.S.C.346a(d), to amend 40 CFR part 180 by establishing a tolerance for residues of clofentezine in or on the raw agricultural commodity apples at 0.5 parts per million (ppm), in the processed feed commodity wet apple pomace at 10 ppm, and in milk at 0.05 ppm. EPA has determined that the petition contains data or information regarding the elements set forth in section 408(d)(2) of the FFDCA; however, EPA has not fully evaluated the sufficiency of the submitted data at this time or whether the data supports granting of the petition. Additional data may be needed before EPA rules on the petition.

APOLLO® SC Ovicide/Miticide (active ingredient clofentezine) is registered for use on apples (early season through tight cluster), pears, almonds, walnuts, apricots, cherries, nectarines, and peaches to control European red mites and several spider mite species. It is an environmentally-friendly, IPM-compatible product used at low dose rates, and only once per season. Clofentezine has been shown to be relatively non-toxic in studies conducted on mammals, fish, birds, aquatic invertebrates, predacious and other beneficial mites, bees, algae, and plants.

On February 23, 1995, EPA conditionally approved the use of APOLLO® SC on apples (early season through tight cluster) and established a permanent tolerance for clofentezine on fresh apples of 0.01 ppm. The registration was made permanent February 19, 1998, following the completion of a successful analytical method try-out (MTO) by EPA (at the 0.01 ppm limit of quanitation (LOQ).

The information summarized below was previously submitted in support of the requested label amendment for use on apples with a 45 day pre-harvest interval. The studies on which this summary is based were thoroughly reviewed and approved by the Agency as part of previous regulatory actions. However, the accuracy of this summary has not been evaluated by the Agency.

Upon re-examination of this tolerance petition, AgrEvo trusts that EPA will agree that the label amendment to allow the use of APOLLO® SC (clofentezine) on apples through a 45 day pre-harvest interval would not pose a significant risk to human health, including that of infants, and children, and is in compliance with the requirements of the Food Quality Protection Act (FQPA) of 1996.

A. Residue Chemistry

1. *Plant metabolism*. The metabolism of clofentezine has been studied in three crops representative of the use pattern for APOLLO® SC: apples (pome fruit), peaches (stone fruit), and grapes (vines/small fruit). In each case, unchanged clofentezine was the major extractable residue present. Non-extractable residues (fiber-bound) were negligible. Minor amounts of 2-chlorobenzonitrile, the major photo-degradation product, were detected, predominantly on the fruit surface. Dissipation of this component may be a significant route in the degradation of clofentezine on the surface of these crops. The nature of the residue in apples, and in all the other registered crops, is therefore adequately understood. The residue of concern is the parent, clofentezine.

2. *Analytical method*. EPA recently approved an analytical method for clofentezine on apples (MRID 43800801) at a LOQ of 0.01 ppm. In support of that effort, AgrEvo submitted an independent laboratory validation of the method (MRID 44038001) which involves organic extraction and then cleanup, followed by high-pressure liquid chromatography. This method is suitable for enforcement for the current registration of APOLLO® SC ovicide/miticide on apples through the tight cluster timing.

For the requested use on apples with a 45 day PHI, an analytical method similar to the above was previously approved during the review of the petition, PP 9F3705/9H5572. This method was deemed suitable for enforcement of the tolerances proposed

in the tolerance petition. Similar analytical methods suitable for enforcement purposes are available for all the other registered crops and relevant animal tissues/milk/fat.

3. *Magnitude of residues*. Extensive field residue trials have been conducted with APOLLO® SC on apples throughout the major apple-growing regions of the United States. Application through 45 days PHI at the maximum use rate resulted in residues of clofentezine on fresh apples of < 0.01 ppm to 0.44 ppm. In processing studies on apples which had been treated with APOLLO® SC at the maximum use rate through 45 days PHI, residues in the processed commodity apple juice were lower than those in the raw agricultural commodity; residues in wet apple pomace ranged from < 0.01 ppm to 0.03 ppm. In tolerance petition PP 9F3705/9H5572 tolerances were proposed and approved (although not enacted) for apples (0.5ppm), and apple pomace, wet and dry (10 ppm).

Residue trials were conducted for APOLLO® SC on pears, apricots, cherries, nectarines, peaches, almonds, and walnuts at the maximum use rates and minimum pre-harvest intervals (PHIs) throughout the major growing regions of the United States. Residues in pears ranged from < 0.01 to 0.2 ppm. Residues in stone fruit ranged from < 0.01 to 0.66 ppm. Residues on almond hulls ranged from 0.93 to 2.4 ppm, on almond nut meats from < 0.05 to 0.3 ppm, and on walnuts < 0.02 ppm. Tolerances were therefore established on pears (0.5 ppm); apricots, cherries, nectarines, and peaches (1.0 ppm); almond nutmeats (0.5 ppm); almond hulls (5.0 ppm); and walnuts (0.02 ppm).

Ruminant feeding studies were conducted to determine the magnitude of the clofentezine-derived residues in the tissues and milk of cows. Four groups of three dairy cattle were fed technical clofentezine in the diet at dose levels of 0, 10, 30, and 100 ppm over a period of 28 days. Daily milk samples were taken and at the termination of the study, the following organs were analyzed: liver, kidney, heart, muscle, peritoneal fat and subcutaneous fat. At the feeding level of 10 ppm, residues were 0.3 ppm in liver and < 0.05 ppm in kidney, milk, and other tissues. EPA established tolerances for cattle, goats, hogs, horses, and sheep as follows: 0.05 ppm in meat, fat, and meat by-products except liver; 0.4 ppm in liver; and 0.01 ppm in milk. The tolerances on meat, fat, meat by-products, and liver were also previously approved in tolerance petitions PP 9F3705/9H5572, the label amendment for use on apples through 45 days PHI. The tolerance for milk was approved (although not enacted) at 0.05 ppm in this tolerance petition.

B. Toxicological Profile

The toxicology of clofentezine has been thoroughly evaluated by EPA as part of previous regulatory actions. The studies are considered to be valid, reliable and adequate for the purposes of evaluating potential health risks and for establishing tolerances. The primary studies submitted in support of the registration of clofentezine are summarized below. The conclusions presented are those determined by the Agency (as reported by the registrant).

1. *Acute toxicity*. Technical grade clofentezine has a relatively low degree of acute toxicity and irritation potential. It is classified as Toxicity Category III for oral, dermal and inhalation toxicity, and Toxicity Category IV for eye and skin irritation. The acute oral LD_{50} of clofentezine was determined to be >5,200 milligram/kilogram (mg/kg) in rats and mice, >3,200 mg/kg in hamsters, and >2,000 mg/kg in beagle dogs. The acute rat dermal LD_{50} was >2,100 mg/kg. Clofentezine is considered to be practically non-irritating to eyes and skin but is considered to be a weak skin sensitizer in the guinea pig maximization assay.

APOLLO® SC is classified as Toxicity Category IV for oral toxicity and skin irritation, and as Toxicity Category III for dermal toxicity and eye irritation. The acute oral LD_{50} of APOLLO® SC was determined to be > 5,000 mg/kg in rats; the acute dermal LD_{50} in rats was > 2,400 mg/kg. APOLLO® SC is considered slightly irritating to eyes and skin.

2. *Genotoxicty*. No evidence of genotoxicity was noted in a battery of *in vitro* and *in vivo* studies. Studies submitted included *Ames Salmonella* and mouse lymphoma gene mutation assays, a mouse micronucleus assay, a rat dominant lethal assay, a gene conversion, and mitotic recombination assay in yeast.

3. *Reproductive and developmental toxicity*. A multigeneration rat reproduction study was conducted at dietary concentrations of 0, 4, 40 and 400 ppm. The parental no-observed adverse effect level (NOAEL) was 40 ppm based on slightly reduced body weights, increased liver weights and hepatocellular hypertrophy at 400 ppm. No treatment related reproductive effects were noted at any dose level.

In a rat developmental toxicity study, clofentezine was administered by gavage at dose levels of 0, 320, 1,280 and 3,200 mg/kg/day during gestation days 6 to 20. Evidence of maternal toxicity was noted at 3,200 mg/kg/day and consisted of decreased weight gain, increased liver weights and centrilobular hepatocellular enlargement. No developmental effects were observed at any dose level.

In a rabbit developmental toxicity study, clofentezine was administered by gavage at dose levels of 0, 250, 1,000 and 3,000 mg/kg/day during gestation days 7 to 28. Slight maternal toxicity (decreased maternal food consumption and weight gain) and a slight decrease in fetal weight were noted at 3,000 mg/kg/day. Thus, the NOAEL was considered to be 1,000 mg/kg/day for both maternal and developmental effects.

4. *Subchronic toxicity*. In a preliminary 90 day feeding study designed to select a suitable high dose level for a subsequent chronic rat study, clofentezine was administered to rats at dietary concentrations of 0, 3,000, 9,000 and 27,000 ppm. A significant reduction in weight gain was noted at 9,000 and 27,000 ppm. In addition, a marked, dose-related hepatomegaly and centrilobular hepatocyte enlargement was noted in all treatment groups. In a subsequent 90-day feeding study, clofentezine was administered to rats at dietary concentrations of 0, 40, 400 and 4,000 ppm. Slightly reduced weight gain, alterations in several clinical pathology parameters, increased liver, kidney and spleen weights, and centrilobular hepatocyte enlargement were noted at 400 and/or 4,000 ppm. Thus, 40 ppm (~2.8 mg/kg/day) was considered to be the NOAEL for this study.

Clofentezine was administered to beagle dogs for 90 days at dietary concentrations of 0, 3,200, 8,000 and 20,000 ppm. Increased liver weights were noted at all dose levels but no histopathological changes nor any other treatment-related effects were observed.

5. *Chronic toxicity*. In a 12 month feeding study, clofentezine was administered to beagle dogs at dietary concentrations of 0, 50, 1,000 and 20,000 ppm. An increase in adrenal and thyroid weights, as well as moderate hepatotoxicity consisting of minimal periportal hepatocyte enlargement with cytoplasmic eosinophilia, hepatomegaly and increased plasma cholesterol, triglycerides and alkaline phosphatase levels, were noted at 20,000 ppm. Evidence of slight hepatotoxicity was also noted at 1,000 ppm. Thus, the NOAEL for this study was considered to be 50 ppm (~1.25 mg/kg/day[1]).

In a 27 month feeding study, clofentezine was administered to rats at dietary concentrations of 0, 10, 40 and 400 ppm. Effects noted at 400 ppm were

limited to the liver and thyroid, primarily of males, and consisted of increased liver weights, a variety of microscopic liver lesions (centrilobular hepatocyte hypertrophy and vacuolation, focal cystic hepatocellular degeneration and diffuse distribution of fat deposits), increased serum thyroxine levels, and a slight but statistically significant increase in the incidence of thyroid follicular cell tumors. The NOAEL was considered to be 40 ppm (~2 mg/kg/day).

Clofentezine was not oncogenic to mice when administered for 2 years at dietary concentrations of 0, 50, 500 and 5,000 ppm. Decreased weight gain, increased liver weights, and increased mortality were noted at 5,000 ppm. An increased incidence of eosinophilic or basophilic hepatocytes was noted at 5,000 ppm, and possibly 500 ppm.

6. *Special studies*. Numerous studies were conducted to investigate the mechanism for the increased incidence of male thyroid follicular tumors that was observed in the chronic rat study. These studies suggest that the tumors may have been caused by increased thyroid stimulating hormone (TSH) levels, which, in turn, resulted from clofentezine's liver toxicity.

7. *Animal metabolism*. The metabolism, tissue distribution and excretion of clofentezine have been evaluated in a number of species. In all species, almost all of the administered dose was recovered within 24 to 48 hours after treatment, primarily via the feces. The major route of metabolism was found to be ring hydroxylation, sometimes preceded by the replacement of a chlorine atom with a methyl-thio group. Blood and tissue levels in the fetuses of pregnant rats that had been treated with clofentezine were much lower than the levels found in the mother, indicating that clofentezine does not readily pass across the placenta. In addition, less than 1% of the administered dose was absorbed through the skin of rats following a 10 hour exposure to a 50 SC (50% suspension concentrate) formulation of clofentezine.

Following oral dosing of a cow and three goats with ^{14}C- labeled clofentezine, the residue in milk was identified as a single metabolite, 4-hydroxyclofentezine. Similarly, 4-hydroxyclofentezine has been shown to be the only metabolite present in fat, liver, and kidney. No unchanged clofentezine or other metabolites were found. Therefore, the nature of the residue in animals is adequately understood. The residues of concern are the combined residues of the parent, clofentezine, and the 4-hydroxyclofentezine metabolite.

8. *Endocrine disruption*. Except for the thyroid mechanistic studies mentioned above, no special studies have been conducted to investigate the potential of clofentezine to induce estrogenic or other endocrine effects. However, the standard battery of required toxicity studies has been completed. These studies include an evaluation of the potential effects on reproduction and development, and an evaluation of the pathology of the endocrine organs following repeated or long-term exposure. These studies are generally considered to be sufficient to detect any endocrine effects. However, with the exception of a slightly increased incidence of thyroid tumors in male rats, no such effects were noted in any of the studies with clofentezine. The male rat is known to be much more susceptible than humans to the carcinogenic effects resulting from thyroid hormone imbalance and/or increased levels of TSH. Therefore, the alterations in thyroid hormone and subsequent thyroid pathological changes, which have been noted following administration of high doses of clofentezine, are considered to be of minimal relevance to human risk assessment, particularly considering the low levels of clofentezine to which humans are likely to be exposed.

C. Aggregate Exposure

Clofentezine is a miticide used on apples, pears, almonds, walnuts, apricots, cherries, peaches, and nectarines. Clofentezine has also been registered recently for use on ornamental plants, however, the product registered for use on ornamental plants (OVATION® miticide/insecticide) is not being marketed at this time. There are no other non-crop uses. Thus, potential sources of non-occupational exposure to clofentezine would consist only of any potential residues in food and drinking water. There are no acute toxicity concerns with clofentezine. Therefore, only chronic exposures are addressed here.

1. *Dietary exposure—Food*. A worst case dietary exposure assessment was performed for clofentezine using the Exposure® 1 software system (TAS, Inc.) and the 1977-78 USDA consumption data. This assessment assumed that 100% of all apples, pears, almonds, walnuts, apricots, cherries, nectarines, peaches, milk, and the fat, meat, and meat by-products of cattle, goats, horses, sheep, and hogs contained residues at the established and proposed tolerance levels. specify here or previously. A more realistic assessment was also conducted using estimates of market share.

2. *Drinking water*. All EPA environmental fate data requirements have been satisfied. The potential for clofentezine to leach into groundwater was assessed in terrestrial field dissipation studies conducted in several locations and in varying soil types. Half-lives ranged from 32.4 to 83 days. No evidence of leaching of parent or degradation products was observed. Based upon these and other studies, EPA concluded that ''clofentezine is a relatively short-lived, non-mobile compound which does not pose a risk to groundwater, and will not be expected to accumulate in rotational crops.'' Thus, the potential for finding significant clofentezine residues in drinking water is minimal and the contribution of any such residues to the total dietary intake of clofentezine will be negligible. No Maximum Contaminant Level for clofentezine has been established.

D. Cumulative Effects

The primary effects observed in the toxicity studies conducted with clofentezine appear to be a result of its potency as an enzyme inducer. Although many other chemicals are also known to induce microsomal enzymes, insufficient information is available at this time to determine whether or not the potential toxic effects from these chemicals are cumulative. Furthermore, realistic estimates of potential non-occupational exposure to clofentezine indicate that such exposures are minimal and far below the levels that might be expected to produce any effects. Thus, any contribution of clofentezine to cumulative risk will not be significant. Therefore, only exposure from clofentezine is being addressed at this time.

E. Safety Determination

1. *U.S. population*. The toxicity and residue data bases for clofentezine are considered to be valid, reliable and essentially complete. Although clofentezine has been classified by EPA as Category C for oncogenicity, quantitative oncogenic risk assessment was considered inappropriate for the following reasons:

i. Evidence of tumors was limited to a single site in one sex of one species and occurred only at the high-dose level.

ii. The increased incidence of thyroid follicular tumors was only marginally increased above both concurrent and historical control levels.

iii. No evidence of genotoxicity has been observed.

iv. Mechanistic data indicate that the thyroid tumors were likely a secondary, threshold-mediated effect associated with clofentezine's liver toxicity. Furthermore, humans are believed to be much less susceptible to this effect than rats. Therefore, no effect on the thyroid-pituitary axis or oncogenic response would be expected at exposure levels which did not affect the liver.

Thus, a standard margin of safety approach is considered appropriate to assess the potential for clofentezine to produce both oncogenic and non-oncogenic effects. Based on the previously described data, EPA has adopted an reference dose (RfD) value for clofentezine of 0.0125 mg/kg/day, which was calculated using the NOAEL of 1.25 mg/kg/day from the 1 year dog feeding study and a 100-fold safety factor.

Using the worst-case assumptions of 100% of crop treated and that all crops and animal commodities contain residues of clofentezine at the current tolerance levels, the aggregate exposure of the general population to clofentezine from the established tolerances utilizes about 5% of the RfD. Using more realistic estimates of percent crop treated and adjusting for contribution from livestock diet, this decreases to less than 0.5% of the RfD. Repeating these assessments with the proposed tolerances, the percent RfD for the worst case is less than 10%, and for the more realistic case the percent RfD decreases to less than 1.2%. There is generally no concern for exposures which utilize less than 100% of the RfD because the RfD represents the level at or below which daily aggregate exposure over a lifetime would not pose significant risks to human health. Therefore, there is a reasonable certainty that no harm will result to the general population from aggregate exposure to clofentezine residues.

2. *Infants and children*. Data from rat and rabbit developmental toxicity studies and rat multi generation reproduction studies are generally used to assess the potential for increased sensitivity of infants and children. The developmental toxicity studies are designed to evaluate adverse effects on the developing organism resulting from pesticide exposure during prenatal development. Reproduction studies provide information relating to reproductive and other effects on adults and offspring from prenatal and postnatal exposure to the pesticide.

No indication of increased sensitivity to infants and children was noted in any of the studies with clofentezine. No developmental effects were noted in rats, even at a dose level (3,200 mg/kg/day) that exceeded the 1,000 mg/kg/day limit dose and produced maternal toxicity. In addition, no evidence of reproductive toxicity was noted in the rat multigeneration reproduction study. Slight developmental toxicity (decreased fetal weights) was noted in rabbits, but only at a dose level (3,000 mg/kg/day) that exceeded the EPA limit dose and also produced maternal toxicity.

FFDCA Section 408 provides that EPA may apply an additional safety factor for infants and children to account for pre- and post-natal toxicity and the completeness of the data base. The toxicology database for clofentezine regarding potential pre- and post-natal effects in children is complete according to existing Agency data requirements and does not indicate any developmental or reproductive concerns. Furthermore, the existing RfD is based on a NOAEL of 1.25 mg/kg/day (from the 1 year dog study) which is already more than 800-fold lower than the NOAEL in the rabbit developmental toxicity study. Thus, the existing RfD of 0.0125 mg/kg/day is considered to be appropriate for assessing potential risks to infants and children and an additional uncertainty factor is not warranted.

Using the conservative exposure assumptions described above (proposed tolerances, 100% crop treated, and no adjustments for percent contribution from livestock diet), aggregate exposure to residues of clofentezine are expected to utilize about 65% of the RfD in non-nursing infants, 33% of the RfD in nursing infants, and 25% of the RfD in children aged 1 to 6 years old.

Using more realistic estimates of percent crop treated and adjusting for the percent contribution from livestock diet, the percent of RfD utilized is less than 8% for these population subgroups. These numbers would be lowered further if anticipated residues were utilized rather than tolerance values. Therefore, there is a reasonable certainty that no harm will result to infants or children from aggregate exposure to clofentezine residues.

F. International Tolerances

Codex tolerances have been established for clofentezine on a wide variety of crops, including apples. The following MRLs were adopted by the Codex Committee on Pesticide Residues (CCPR) in April, 1988, except as noted in parentheses:

Commodity	MRL (mg/kg)
Cattle meat	0.05
Cattle, edible offal,	0.1
Cattle, milk	0.01
1Citrus fruits	0.5 (1995)
Cucumber	1.0 (1991)
Currants	0.01 (1993)
Eggs (poultry)	0.05
Grapes	1.0 (1995)
Pome fruits	0.5
Poultry, edible offal	0.05
Poultry meat	0.05
Stone fruits	0.2
Strawberry	2.0

[FR Doc. 99–1904 Filed 1–27–99; 8:45 am]

BILLING CODE 6560–50–F

ENVIRONMENTAL PROTECTION AGENCY

[OPP–30466; FRL–6054–1]

Certain Companies; Applications to Register Pesticide Products

AGENCY: Environmental Protection Agency (EPA).

ACTION: Notice.

SUMMARY: This notice announces receipt of applications to register pesticide products containing new active ingredients not included in any previously registered products pursuant to the provisions of section 3(c)(4) of the Federal Insecticide, Fungicide, and Rodenticide Act (FIFRA), as amended.

DATES: Written comments must be submitted by March 1, 1999.

ADDRESSES: By mail, submit written comments identified by the document control number [OPP–30466] and the file symbols to: Public Information and Records Intregrity Branch, Information Resources and Services Division (7502C), Office of Pesticide Programs, Environmental Protection Agency, 401 M St., SW., Washington, DC 20460. In person, bring comments to: Environmental Protection Agency, Rm. 119, CM #2, 1921 Jefferson Davis Hwy., Arlington, VA.

Comments and data may also be submitted electronically to: opp-docket@epamail.epa.gov. Follow the instructions under ''SUPPLEMENTARY INFORMATION.'' No Confidential Business Information (CBI) should be submitted through e-mail.

Information submitted as a comment concerning this notice may be claimed confidential by marking any part or all of that information as CBI. Information so marked will not be disclosed except in accordance with procedures set forth in 40 CFR part 2. A copy of the

comment that does not contain CBI must be submitted for inclusion in the public record. Information not marked confidential may be disclosed publicly by EPA without prior notice. The public docket is available for public inspection in Rm. 119 at the Virginia address given above, from 8:30 a.m. to 4 p.m., Monday through Friday, excluding holidays.

FOR FURTHER INFORMATION CONTACT: By mail: James Tompkins, Product Manager (PM-25), Registration Division (7505C), Office of Pesticide Programs, Environmental Protection Agency, 401 M St., SW., Washington, DC 20460. Office location, telephone number, and e-mail address: Rm. 239, CM #2, 1921 Jefferson Davis Highway, Arlington, VA 22202, (703 305–5697, e-mail: tompkins.jim@epamail.epa.gov.

SUPPLEMENTARY INFORMATION: EPA received applications as follows to register pesticide products containing active ingredients not included in any previously registered products pursuant to the provision of section 3(c)(4) of FIFRA. Notice of receipt of these applications does not imply a decision by the Agency on the applications.

I. Products Containing Active Ingredients Not Included In Any Previously Registered Products

1. File Symbol: 524–UOO. Applicant: Monsanto Company, 600 13th St., NW., Suite 660, Washington, DC 20005. Product Name: MON 37500 Technical. Herbicide. Active ingredient: *N*-[[(4,6-dimethoxy-2-pyrimidinyl) amino]-carbonyl]-2-(ethyl-sulfonyl) imidazo[1,2-*a*] pyridine-3-sulfonamide at 98.0%. Proposed classification/Use: None. For use only in the manufacture of herbicide formulations.

2. File Symbol: 524–LNN. Applicant: Monsanto Co. Product Name: Maverick. Herbicide. Active ingredient: Sulfosulfuron, 1-(2-ethylsulfonylimidazo [1,2-a] pyridin-3-ylsulfonyl)-3-(4,6-dimethoxypyrimidin-2-yl) urea at 75%. Proposed classification/Use: None. For the control of annual grasses and broadleaf weeds in winter and spring wheat.

3. File Symbol: 524–LNN. Applicant: Monsanto Co. Product Name: MON 37503NC. Herbicide. Sulfosulfuron, 1-(2-ethylsulfonylimidazo [1,2-a] pyridin-3-ylsulfonyl)-3-(4,6-dimethoxypyrimidin-2-yl) urea at 75%. Proposed classification/Use: None. For the control of annual and perennial grass and broadleaf weeds in noncrop areas.

Notice of approval or denial of an application to register a pesticide product will be announced in the **Federal Register**. The procedure for requesting data will be given in the **Federal Register** if an application is approved.

Comments received within the specified time period will be considered before a final decision is made; comments received after the time specified will be considered only to the extent possible without delaying processing of the application.

II. Public Record and Electronic Submissions

The official record for this notice, as well as the public version, has been established for this notice under docket number [OPP–30466] (including comments and data submitted electronically as described below). A public version of this record, including printed, paper versions of electronic comments, which does not include any information claimed as CBI, is available for inspection from 8:30 a.m. to 4 p.m., Monday through Friday, excluding legal holidays. The official notice record is located at the address in ''ADDRESSES'' at the beginning of this document.

Electronic comments can be sent directly to EPA at:

opp-docket@epamail.epa.gov

Electronic comments must be submitted as an ASCII file avoiding the use of special characters and any form of encryption. Comment and data will also be accepted on disks in Wordperfect 5.1/6.1 or ASCII file format. All comments and data in electronic form must be identified by the docket number [OPP–30466]. Electronic comments on this notice may be filed online at many Federal Depository Libraries.

Authority: 7 U.S.C. 136.

List of Subjects

Environmental protection, Pesticides and pest, Product registration.

Dated: January 20, 1999.

James Jones,

Director, Registration Division, Office of Pesticide Programs.

[FR Doc. 99–1902 Filed 1–27–99; 8:45 am]

BILLING CODE 6560–50–F

ENVIRONMENTAL PROTECTION AGENCY

[FRL–6226–4]

Proposed Administrative Settlement Under the Comprehensive Environmental Response, Compensation, and Liability Act

AGENCY: Environmental Protection Agency.

ACTION: Request for public comment.

SUMMARY: The U.S. Environmental Protection Agency is proposing to enter into a *de minimis* settlement pursuant to section 122(g)(4) of the Comprehensive Environmental Response, Compensation and Liability Act of 1980, as amended (CERCLA), 42 U.S.C. 9622(g)(4). This proposed settlement is intended to resolve the liabilities under CERCLA of four *de minimis* parties for response costs incurred and to be incurred at the C&R Battery Company, Inc. Superfund Site, Chesterfield County, Virginia.

DATES: Comments must be provided on or before March 1, 1999.

ADDRESSES: Comments should be addressed to the Docket Clerk, U.S. Environmental Protection Agency, Region III, 1650 Arch Street, Philadelphia, PA 19103, and should refer to: *In Re C&R Battery Company, Inc. Superfund Site,* Chesterfield County, Virginia, U.S. EPA Docket No. III–98–090–DC.

FOR FURTHER INFORMATION CONTACT: Yvette Hamilton-Taylor (3RC32), 215/814–2636, U.S. Environmental Protection Agency, 1650 Arch Street, Philadelphia, Pennsylvania 19103.

SUPPLEMENTARY INFORMATION: Notice of *De Minimis* Settlement: In accordance with section 122(i)(1) of CERCLA, notice is hereby given of a proposed administrative settlement concerning the C&R Battery Company, Inc. Superfund Site, in Chesterfield County, Virginia. The administrative settlement was signed by the United States Environmental Protection Agency, Region III's Regional Administrator on November 12, 1998 and is subject to review by the public pursuant to this Notice. This agreement is also subject to the approval of the Attorney General, United States Department of Justice or her designee and for the grant of a covenant not to sue for natural resource damages, is also subject to agreement in writing by the Department of Interior. Below are listed the parties who have executed binding certifications of their consent to participate in this settlement:

1. C&C Cullet Supply, Inc.
2. J. Solotkin & Company, Inc.
3. Tidewater Metals Company

4. Virginia Scrap Iron and Metal Company, Inc.

These four parties collectively have agreed to pay $10,341.37 to the Hazardous Substances Trust Fund subject to the contingency that EPA may elect not to complete the settlement if comments received from the public during this comment period disclose facts or considerations which indicate the proposed settlement is inappropriate, improper, or inadequate. Monies collected from the *de minimis* parties will be applied towards past response costs incurred at or in connection with the Site. Out of such amount $937.90 will be paid directly to the Department of Interior for natural resources damages. The settlement includes a premium to cover the risk of cost overruns or increased costs to address conditions at the Site previously unknown to EPA but discovered after the effective date of the Consent Order. EPA is entering into this agreement under the authority of sections 107 and 122(g) of CERCLA, 42 U.S.C. 9607 and 9622(g). Section 122(g) authorizes early settlements with *de minimis* parties to allow them to resolve their liabilities at Superfund Sites without incurring substantial transaction costs. Under this authority, EPA proposes to settle with potentially responsible parties in connection with the C&R Battery Company, Inc. Superfund Site, each of whom is responsible for less than one percent of the volume of hazardous substance disposed of at the Site. The grant of a covenant not to sue for natural resources damages by the Department of Interior to those parties paying their share of such allocated costs is subject to agreement in writing by the Department of Interior pursuant to section 122(j) of CERCLA, 42 U.S.C. 9622(j). EPA issued a draft settlement proposal to the *de minimis* parties on September 4, 1998 and invited comments and challenges to the volumetric ranking. By September 23, 1998 the *de minimis* parties submitted executed certifications to the draft settlement proposal and did not elect to comment on either the draft proposal or the volumetric ranking summary.

The Environmental Protection Agency will receive written comments relating to this Agreement for thirty (30) days from the date of publication of this Notice. A copy of the proposed Administrative Order on Consent can be obtained from the Environmental Protection Agency, Region III, Office of Regional Counsel, 1650 Arch Street, Philadelphia, Pennsylvania, 19103 by contacting Yvette Hamilton-Taylor at (215) 814–2636.

W. Michael McCabe,

Regional Administrator, Region III.

[FR Doc. 99–2050 Filed 1–27–99; 8:45 am]

BILLING CODE 6560–50–P

ENVIRONMENTAL PROTECTION AGENCY

[FRL–6227–1]

Notice of Proposed Administrative Cost Recovery Settlement Pursuant to the Comprehensive Environmental Response, Compensation, and Liability Act

AGENCY: Environmental Protection Agency.

ACTION: Notice; request for public comment.

SUMMARY: In accordance with section 122(i) of the Comprehensive Environmental Response, Compensation, and Liability Act, as amended (''CERCLA''), notice is hereby given of a proposed administrative cost recovery settlement under section 122(h)(1) of CERCLA concerning the Moschiano Plating Company, Inc., site at 2808–2824 West Lake Street, Chicago, Illinois (''Site''). The settlement resolves an EPA claim under section 107(a) of CERCLA against (1) the Estate of Frank B. Moschiano, (2) Josephine S. Moschiano, individually and as the Executor of the Estate of Frank B. Moschiano, and (3) the heirs, successors and assigns of the property in the Estate of Frank B. Moschiano. The settlement requires the settling parties to pay $39,750 to the Hazardous Substances Superfund. The settlement also requires that the settling parties use their best efforts to sell the Site property and then pay to the Hazardous Substances Superfund the proceeds of that sale minus reasonable fees incurred to sell the Site. Additionally, in future the settling parties must notify EPA if certain events occur: (1) if the settling parties offer to sell, or accept an offer to sell, the Site property; (2) if the settling parties file an insurance claim or receive payment on an insurance claim related to the Site or Moschiano Plating Company, Inc.; and (3) if the settling parties receive payments on any accounts receivable for Moschiano Plating Company, Inc.

For thirty (30) days following the date of publication of this notice, the Agency will receive written comments relating to the settlement. The Agency will consider all comments received and may modify or withdraw its consent to the settlement if comments received disclose facts or considerations which indicate that the settlement is inappropriate, improper, or inadequate. The Agency's response to any comments received will be available for public inspection at the Superfund Records Center, located at 77 West Jackson Boulevard, Seventh Floor, Chicago, Illinois 60604.

DATES: Comments must be submitted on or before March 1, 1999.

ADDRESSES: The proposed settlement and additional background information relating to the settlement are available for public inspection at the Superfund Records Center, located at 77 West Jackson Boulevard, Seventh Floor, Chicago, Illinois. A copy of the proposed settlement also may be obtained from the Superfund Records Center, located at the address above, or by contacting Jacqueline Kline at telephone number 312/886–7167. Comments should reference the Moschiano Plating Company, Inc., Site, Chicago, Illinois, and EPA Docket No. V–W–99–AO–10 and should be addressed to Jacqueline Kline, Associate Regional Counsel, 77 West Jackson Boulevard (C–14J), Chicago, Illinois 60604.

FOR FURTHER INFORMATION CONTACT: Jacqueline Kline, Associate Regional Counsel, at the address and telephone number listed above.

Dated: January 13, 1999.

James Mayka,

Acting Director, Superfund Division, Region 5.

[FR Doc. 99–2049 Filed 1–27–99; 8:45 am]

BILLING CODE 6560–50–P

FEDERAL COMMUNICATIONS COMMISSION

Public Information Collection Approved by Office of Management and Budget

January 20, 1999.

The Federal Communications Commission (FCC) has received Office of Management and Budget (OMB) approval for the following public information collection pursuant to the Paperwork Reduction Act of 1995, Pub. L.104–13. An agency may not conduct or sponsor a collection of information unless it displays a currently valid control number. Not withstanding any other provisions of law, no person shall be subject to any penalty for failing to comply with a collection of information subject to the Paperwork Reduction Act (PRA) that does not display a valid control number. Questions concerning the OMB control numbers and

expiration dates should be directed to Les Smith, Federal Communications Commission, (202) 418–0217.

Federal Communications Commission.

OMB Control No.: 3060–0834.
Expiration Date: 12/31/2001.
Title: Reconsideration of Rules and Policies for the 220–222 MHz Radio Service—PR 89–552, GN 93–252, PR 93–253.
Form No.: N/A.
Estimated Annual Burden: 44,850 annual hours; .30 minutes to 12 hours per response; 18,400 responses.
Needs and Uses: The information collected will be used by the Commission to verify licensee compliance with Commission rules and regulations, to ensure the integrity of the 220 MHz service, and to ensure that licensees continue to fulfill their statutory responsibilities in accordance with the Communications Act of 1934.

Federal Communications Commisssion.

Magalie Roman Salas,

Secretary.

[FR Doc. 99–1940 Filed 1–27–99; 8:45 am]

BILLING CODE 6712–01–P

FEDERAL ELECTION COMMISSION

Sunshine Act Meeting

FEDERAL REGISTER NUMBER: 99–1512.

PREVIOUSLY ANNOUNCED DATE AND TIME: Tuesday, January 26, 1999, 10:00 A.M., meeting closed to the public. This meeting was cancelled.

* * * * *

DATE AND TIME: Tuesday, February 2, 1999, at 10:00 A.M.

PLACE 999 E Street, N.W., Washington, D.C.

STATUS: This meeting will be closed to the public.

ITEMS TO BE DISCUSSED: Compliance matters pursuant to 2 U.S.C. 437g. Audits conducted pursuant to 2 U.S.C. 437g, 438(b), and Title 26, U.S.C. Matters concerning participation in civil actions or proceedings or arbitration. Internal personnel rules and procedures or matters affecting a particular employee.

* * * * *

DATE AND TIME: Wednesday, February 3, 1999, at 2:00 P.M.

PLACE: 999 E Street, N.W., Washington, D.C. (Ninth floor).

STATUS: This meeting will be open to the public.

ITEMS TO BE DISCUSSED: Correction and Approval of Minutes. Legislative Recommendations, 1999. Report of the Audit Division on Michigan Republican State Committee. Administrative Matters.

PERSON TO CONTACT FOR INFORMATION: Mr. Ron Harris, Press Officer, telephone (202) 694–1220.

Marjorie W. Emmons,

Secretary of the Commission.

[FR Doc. 99–2129 filed 1–26–99; 10:45 am]

BILLING CODE 6715–01–M

FEDERAL MARITIME COMMISSION

Notice of Agreement(s) Filed

The Commission hereby gives notice of the filing of the following agreement(s) under the Shipping Act of 1984.

Interested parties can review or obtain copies of agreements at the Washington, DC offices of the Commission, 800 North Capitol Street, NW, Room 962. Interested parties may submit comments on an agreement to the Secretary, Federal Maritime Commission, Washington, DC 20573, within 10 days of the date this notice appears in the **Federal Register**.

Agreement No.: 232–011606–001
Title: The COSCON/KL Slot Exchange Agreement
Parties: COSCO Container Lines, Kawasaki Kisen Kaisha, Ltd.
Synopsis: The proposed amendment would extend the termination date of the Agreement through March 2, 2001.

Dated: January 22, 1999.

By Order of the Federal Maritime Commission.

Bryant L. VanBrakle,

Secretary.

[FR Doc. 99–1917 Filed 1–27–99; 8:45 am]

BILLING CODE 6730–01–M

FEDERAL MARITIME COMMISSION

Ocean Freight Forwarder License; Applicants

Notice is hereby given that the following applicants have filed with the Federal Maritime Commission applications for licenses as ocean freight forwarders pursuant to section 19 of the Shipping Act of 1984 (46 U.S.C. app. 1718 and 46 CFR 510).

Persons knowing of any reason why any of the following applicants should not receive a license are requested to contact the Office of Freight Forwarders, Federal Maritime Commission, Washington, D.C. 20573.

First Unicorn International, 9333 Guess Street, Rosemead, CA 91770, Officers: Henry Q. Cheung, President, Yeh To, Vice President.

Dated: January 22, 1999.

Bryant L. VanBrakle,

Secretary.

[FR Doc. 99–1916 Filed 1–27–99; 8:45 am]

BILLING CODE 6730–01–M

FEDERAL RESERVE SYSTEM

Formations of, Acquisitions by, and Mergers of Bank Holding Companies

The companies listed in this notice have applied to the Board for approval, pursuant to the Bank Holding Company Act of 1956 (12 U.S.C. 1841 *et seq.*) (BHC Act), Regulation Y (12 CFR Part 225), and all other applicable statutes and regulations to become a bank holding company and/or to acquire the assets or the ownership of, control of, or the power to vote shares of a bank or bank holding company and all of the banks and nonbanking companies owned by the bank holding company, including the companies listed below.

The applications listed below, as well as other related filings required by the Board, are available for immediate inspection at the Federal Reserve Bank indicated. The application also will be available for inspection at the offices of the Board of Governors. Interested persons may express their views in writing on the standards enumerated in the BHC Act (12 U.S.C. 1842(c)). If the proposal also involves the acquisition of a nonbanking company, the review also includes whether the acquisition of the nonbanking company complies with the standards in section 4 of the BHC Act. Unless otherwise noted, nonbanking activities will be conducted throughout the United States.

Unless otherwise noted, comments regarding each of these applications must be received at the Reserve Bank indicated or the offices of the Board of Governors not later than February 22, 1999.

A. Federal Reserve Bank of St. Louis (Randall C. Sumner, Vice President) 411 Locust Street, St. Louis, Missouri 63102-2034:

1. Memphis Bancshares, Inc., Memphis, Missouri; to become a bank holding company by acquiring 100 percent of the voting shares of Community Bank of Memphis, Memphis, Missouri, in organization.

B. Federal Reserve Bank of San Francisco (Maria Villanueva, Manager of Analytical Support, Consumer Regulation Group) 101 Market Street, San Francisco, California 94105-1579:

1. Castle Creek Capital Partners Fund IIa, LP, and Castle Creek Capital Partners Fund IIb, LP, both of Rancho Santa Fe, California; to become bank

holding companies by acquiring up to 23.93 percent of the voting shares of Rancho Santa Fe National Bank, Rancho Santa Fe, California.

2. WJR Corporation, Rancho Santa Fe, California; to become a bank holding company by acquiring 22.96 percent of the voting shares of Castle Creek Capital LLC, Rancho San Fe, California, and thereby indirectly acquire Rancho Santa Fe National Bank, Rancho Santa Fe, California.

3. Eggemeyer Advisory Corp., Rancho Santa Fe, California; to increase its indirect ownership through Castle Creek Capital Partners Fund I, LP, Rancho Santa Fe, California, Castle Creek Capital Partners Fund IIa, LP, and Castle Creek Capital Partners Fund, IIb, both of Rancho Santa Fe, California, to approximately 48.94 percent of the voting shares of Rancho Santa Fe National Bank, Rancho Santa Fe, California.

Board of Governors of the Federal Reserve System, January 25, 1999.

Robert deV. Frierson,

Associate Secretary of the Board.

[FR Doc. 99–2047 Filed 1–27–99; 8:45 am]

BILLING CODE 6210–01–F

DEPARTMENT OF HEALTH AND HUMAN SERVICES

Agency for Toxic Substances and Disease Registry

[ATSDR–141]

Public Health Assessments Completed

AGENCY: Agency for Toxic Substances and Disease Registry (ATSDR), Department of Health and Human Services (HHS).

ACTION: Notice.

SUMMARY: This notice announces those sites for which ATSDR has completed public health assessments during the period April 1998 through September 1998. This list includes sites that are on or proposed for inclusion on the National Priorities List (NPL), and includes sites for which assessments were prepared in response to requests from the public.

FOR FURTHER INFORMATION CONTACT: Robert C. Williams, P.E., DEE, Director, Division of Health Assessment and Consultation, Agency for Toxic Substances and Disease Registry, 1600 Clifton Road, NE., Mailstop E–32, Atlanta, Georgia 30333, telephone (404) 639–0610.

SUPPLEMENTARY INFORMATION: The most recent list of completed public health assessments was published in the **Federal Register** on July 15, 1998, [63 FR 38175]. This announcement is the responsibility of ATSDR under the regulation, Public Health Assessments and Health Effects Studies of Hazardous Substances Releases and Facilities [42 CFR Part 90]. This rule sets forth ATSDR's procedures for the conduct of public health assessments under section 104(i) of the Comprehensive Environmental Response, Compensation, and Liability Act (CERCLA), as amended by the Superfund Amendments and Reauthorization Act (SARA) [42 U.S.C. 9604(i)].

Availability

The completed public health assessments and addenda are available for public inspection at the Division of Health Assessment and Consultation, Agency for Toxic Substances and Disease Registry, Building 33, Executive Park Drive, Atlanta, Georgia (not a mailing address), between 8 a.m. and 4:30 p.m., Monday through Friday except legal holidays. The completed public health assessments are also available by mail through the U.S. Department of Commerce, National Technical Information Service (NTIS), 5285 Port Royal Road, Springfield, Virginia 22161, or by telephone at (703) 487–4650. NTIS charges for copies of public health assessments and addenda. The NTIS order numbers are listed in parentheses following the site names.

Public Health Assessments Completed or Issued

Between April 1, 1998 and September 30, 1998 public health assessments were issued for the sites listed below:

NPL Sites

Arizona

Luke Air Force Base—Phoenix—(PB98–149289)

Yuma Marine Corps Air Station—Yuma—(PB98–1167810)

California

Norton Air Force Base—Norton Air Force Base—(PB–144967)

Tracy Defense Depot (a/k/a Defense Distribution Region West Tracy Army)—Tracy—(PB98–173094)

Travis Air Force Base—Travis—(PB99–101321)

Florida

Homestead Air Force Base—Homestead—(P99–109365)

MRI Corporation—Tampa—(PB98–159841)

Georgia

Southwire Company and Southwire Company Copper Division —Carrollton—(PB99–102998)

Illinois

Casswood Treated Products—Beardstown—(PB98–139280)

Danville H & L Danville City Dump—Danville—(PB99–101339)

Dowzer Electric—Mt. Vernon—(PB98–139119)

H.O.D. Landfill—Antioch—(PB99–107394)

Lenz Oil Service Incorporated—Lemont—(PB98–159833)

Minnesota

U.S Air Force Twin Cities Reserve Small Arms Range (a/k/a Minneapolis St. Paul International Airport Air Reserve Station)—Minneapolis—(PB98–149164)

Texas

Air Force Plant #4 (General Dynamics)—Fort Worth—(PB98–154313)

Pantex Plant—Amarillo—(PB99–109779)

U.S. Virgin Islands

Virgin Island Chemical Corporation—St. Croix—(PB98–148224)

Washington

U.S. Navy Port Hadlock Detachment (Indian Island Depot) (a/k/a Naval Ordnance Center, Pacific Division)—Indian Island—(PB99–110959)

Non NPL Petitioned Sites

Connecticut

Gallup's Quarry—Planfield—(PB99–104274)

Flordia

Loxahatchee Nursery—Palm City—(PB99–109290)

Georgia

Atlanta Gaslight Company—Augusta—(PB98–150261)

Kentucky

Rubbertown—Louisville—(PB99–109202)

Montana

Kings Creek (a/k/a Fort Belknap Indian Reservation/Zortman Mining Incorporated)—Lodgepole—(PB98–148448)

South Carolina

Laidlow Environmental Services Facility—Roebuck—(PB98–173800)

Dated: January 22, 1999.

Georgi Jones,

Director, Office of Policy and External Affairs, Agency for Toxic Substances and Disease Registry.

[FR Doc. 99–1987 Filed 1–27–99; 8:45 am]

BILLING CODE 4163–70–P

DEPARTMENT OF HEALTH AND HUMAN SERVICES

Agency for Toxic Substance and Disease Registry

Centers for Disease Control and Prevention

Public Meeting of the Inter-Tribal Council on Hanford Health Projects (ICHHP) in Association With the Citizens Advisory Committee on Public Health Service (PHS) Activities and Research at Department of Energy (DOE) Sites: Hanford Health Effects Subcommittee

Name: Public meeting of the Inter-tribal Council on Hanford Health Projects (ICHHP) in association with the Citizens Advisory Committee on PHS Activities and Research at Department of Energy (DOE) Sites: Hanford Health Effects Subcommittee (HHES).

Times and Dates: 9 a.m.—4 p.m., February 24, 1999.

Place: Cavanaugh's's Hotel at Columbia Center, 1101 North Columbia Center Boulevard, Kennewick, Washington 99336.

Status: Open to the public, limited only by the space available. The meeting room accommodates approximately 50 people.

Background

Under a Memorandum of Understanding (MOU) signed in October 1990 and renewed in November 1992 between ATSDR and DOE. The MOU delineates the responsibilities and procedures for ATSDR's public health activities at DOE sites required under sections 104, 105, 107, and 120 of the Comprehensive Environmental Response, Compensation, and Liability Act (CERCLA or ''Superfund''). These activities include health consultations and public health assessments at DOE sites listed on, or proposed for, the Superfund National Priorities List and at sites that are the subject of petitions from the public; and other health-related activities such as epidemiologic studies, health surveillance, exposure and disease registries, health education, substance-specific applied research, emergency response, and preparation of toxicological profiles.

In addition, under an MOU signed in December 1990 with DOE and replaced by an MOU signed in 1996, the Department of Health and Human Services (HHS) has been given the responsibility and resources for conducting analytic epidemiologic investigations of residents of communities in the vicinity of DOE facilities, workers at DOE facilities, and other persons potentially exposed to radiation or to potential hazards from non-nuclear energy production and use. HHS has delegated program responsibility to CDC. Community Involvement is a critical part of ATSDR's and CDC's energy-related research and activities and input from members of the ICHHP is part of these efforts. The ICHHP will work with the HHES to provide input on American Indian health effects at the Hanford, Washington site.

Purpose: The purpose of this meeting is to address issues that are unique to tribal involvement with the HHES, including discussion on Hanford Thyroid Disease Study results, update on tribal cooperative agreements, and development of a National Research Agenda with tribal input.

Matters to be Discussed: Agenda Items will include a dialogue on issues that are unique to tribal involvement with the HHES. This will include exploring cooperative agreement activities in environmental health capacity building and providing support for tribal involvement in and representation on the HHES.

Agenda items are subject to change as priorities dictate.

CONTACT PERSONS FOR MORE INFORMATION: Leslie C. Campbell, Executive Secretary HHES, or Marilyn Palmer, Committee Management Specialist, Division of Health Assessment and Consultation, ATSDR, 1600 Clifton Road, NE m/s E–56, Atlanta, GA 30333. Telephone 1–888/42–ATSDR (28737), Fax 404/639–6075.

The Director, Management Analysis and Services office has been delegated the authority to sign **Federal Register** notices pertaining to announcements of meetings and other committee management activities, for both the Centers for Disease Control and Prevention and the Agency for Toxic Substances and Disease Registry.

Dated: January 22, 1999.

Carolyn J. Russell,

Director, Management Analysis and Services Office, Centers for Disease Control and Prevention (CDC).

[FR Doc. 99–1992 Filed 1–27–99; 8:45 am]

BILLING CODE 4163–18–P

DEPARTMENT OF HEALTH AND HUMAN SERVICES

Agency for Toxic Substance and Disease Registry

Centers for Disease Control and Prevention

Citizens Advisory Committee on Public Health Service (PHS) Activities and Research at Department of Energy (DOE) Sites: Hanford Health Effects Subcommittee

In accordance with section 10(a)(2) of the Federal Advisory Committee Act (Pub. L. 92–463), the Agency for Toxic Substances and Disease Registry (ATSDR) and the Centers for Disease Control and Prevention (CDC) announce the following meeting.

Name: Citizens Advisory Committee on PHS Activities and Research at Department of Energy (DOE) Sites: Hanford Health Effects Subcommittee (HHES).

Times and Dates: 8:30 a.m.–5:30 p.m., February 25, 1999; 8:30 a.m.–4:30 p.m., February 26, 1999.

Place: Cavanaugh's's Hotel at Columbia Center, 1101 North Columbia Center Boulevard, Kennewick, Washington 99336. Telephone 509/783–0611.

Status: Open to the public, limited only by the space available. The meeting room accommodates approximately 150 people.

Background: Under a Memorandum of Understanding (MOU) signed in October 1990 and renewed in November 1992 between ATSDR and DOE. The MOU delineates the responsibilities and procedures for ATSDR's public health activities at DOE sites required under sections 104, 105, 107, and 120 of the Comprehensive Environmental Response, Compensation, and Liability Act (CERCLA or ''Superfund''). These activities include health consultations and public health assessments at DOE sites listed on, or proposed for, the Superfund National Priorities List and at sites that are the subject of petitions from the public; and other health-related activities such as epidemiologic studies, health surveillance, exposure and disease registries, health education, substance-specific applied research, emergency response, and preparation of toxicological profiles.

In addition, under an MOU signed in December 1990 with DOE and replaced by an MOU signed in 1996, the Department of Health and Human Services (HHS) has been given the responsibility and resources for conducting analytic epidemiologic investigations of residents of communities in the vicinity of DOE facilities, workers at DOE facilities, and other persons potentially exposed to radiation or to potential hazards from non-nuclear energy production and use. HHS has delegated program responsibility to CDC.

Purpose: This subcommittee is charged with providing advice and recommendations to the Director, CDC, and the Administrator, ATSDR, regarding community, American Indian Tribes, and labor concerns pertaining

to CDC's and ATSDR's public health activities and research at this DOE site. The purpose of this meeting is to receive an update from the Inter-tribal Council on Hanford Health Projects; to review and approve the Minutes of the previous meeting; to receive updates from ATSDR/NCEH and NIOSH; to receive reports from the Outreach, Public Health Assessment, Public Health Activities, and the Studies Workgroups; and to address other issues and topics, as necessary.

Matters To Be Discussed: Agenda items include a presentation and discussion on the Nevada Test Site Fallout Study, implications for proposed Hanford Medical Monitoring Program, results of the Hanford Thyroid Disease Study, and worker health surveillance programs.

Agenda items are subject to change as priorities dictate.

Contact Persons for More Information: Leslie C. Campbell, Executive Secretary HHES, or Marilyn Palmer, Committee Management Specialist, Division of Health Assessment and Consultation, ATSDR, 1600 Clifton Road, NE m/s E–56, Atlanta, Georgia 30333. Telephone 1–888/42–ATSDR(28737), Fax 404/639–6075.

The Director, Management Analysis and Services Office has been delegated the authority to sign **Federal Register** notices pertaining to announcements of meetings and other committee management activities, for both the Centers for Disease Control and Prevention and the Agency for Toxic Substances and Disease Registry.

Dated: January 22, 1999.

Carolyn J. Russell,

Director, Management Analysis and Services Office, Centers for Disease Control and Prevention (CDC).

[FR Doc. 99–1991 Filed 1–27–99; 8:45 am]

BILLING CODE 4163–18–P

DEPARTMENT OF HEALTH AND HUMAN SERVICES (HHS)

Administration on Aging

[Program Announcement No. AoA–99–1]

Fiscal Year 1999 Program Announcement; Availability of Funds and Notice Regarding Applications

AGENCY: Administration on Aging, HHS.

ACTION: Announcement of availability of funds and request for applications to carry out cooperative agreement awards to train retired persons to serve in their communities as volunteer expert resources and educators in combating health care waste, fraud, and abuse.

SUMMARY: The Administration on Aging (AoA) announces that under this program announcement it will hold a competition for ''Senior Medicare Patrol Projects'' that demonstrate effective ways of utilizing retired persons as volunteer expert resources and educators in community efforts to combat health care waste, fraud and abuse. The deadline date for the submission of applications is March 31, 1999.

Public and/or nonprofit agencies, organizations, and institutions are eligible to apply under this program announcement. However, consistent with the terms of Senate Report 105–300, which accompany the Omnibus Consolidated Appropriations Act of 1999 (Pub.L.105–277), preference will be given in the making of cooperative agreement awards to projects that will be carried out by consortia headed by community-based public or non-profit agencies or organizations. In addition, the AoA is currently funding ''Senior Medicare Patrol Projects'' in twelve states—California, Hawaii, Illinois, Iowa, Maryland, Minnesota, Missouri, New Hampshire, New York, Pennsylvania, Rhode Island, and Wisconsin. No further awards will be made in these states.

Application kits are available by writing to the Department of Health and Human Services, Administration on Aging, Office of Governmental Affairs and Elder Rights, 330 Independence Avenue, SW., Room 4748, Washington, DC 20201, telephone: (202) 619–7592 or (202) 690–7525.

Dated: January 21, 1999.

Jeanette C. Takamura,

Assistant Secretary for Aging.

[FR Doc. 99–2056 Filed 1–27–99; 8:45 am]

BILLING CODE 4150–40–P

DEPARTMENT OF HEALTH AND HUMAN SERVICES

Centers for Disease Control and Prevention

Office of the Director, Centers for Disease Control and Prevention (CDC), Announces the Following Meeting

Name: Guide to Community Preventive Services (GCPS) Task Force Meeting.

Times and Dates: 9 a.m.–4:45 p.m., February 10, 1999. 8 a.m.–3:30 p.m., February 11, 1999.

Place: The Sheraton Buckhead Hotel Atlanta, 3405 Lenox Road, Atlanta, Georgia 30326. Telephone 404/261–9250.

Status: Open to the public, limited only by the space available. The meeting room accommodates approximately 75 people.

Purpose: The mission of the Task Force is to develop and publish a Guide to Community Preventive Services, which is based on the best available scientific evidence and current expertise regarding essential public health services and what works in the delivery of those services.

Matters to be Discussed: Agenda items include an update on the Healthy Aging Project by the Health Care Financing Administration; a progress report on the development of the Guide; a discussion of the key issues for methods development; a discussion on the key decisions for chapter development: review of logic frameworks and proposed interventions for the Sociocultural Environment, Sexual Behavior, and Cancer chapters; a discussion of the implementation and evaluation plans for the Guide; a discussion of cost effectiveness; a progress report on the draft manuscripts: Methods, Data Collection Procedures and Instrument for Systematic Reviews, Quality of Execution, and Scope and Organization of the Guide; a discussion on the timeline for the development of the Guide; an update on the revisions and field test results of the Vaccine Preventable Diseases chapter; a discussion on the prevention research agenda issues and a discussion on planning the evidentiary database.

Agenda items are subject to change as priorities dictate.

Persons interested in reserving a space for this meeting should call 404/639–4301 by close of business on February 5, 1999.

Contact Person for Additional Information: Marguerite Pappaioanou, Chief, CPS Guide Development Activity, Division of Prevention Research and Analytic Methods, Epidemiology Program Office, CDC, 1600 Clifton Road, NE, M/S D–01, Atlanta, Georgia 30333. Telephone 404/639–4301.

The Director, Management Analysis and Services office has been delegated the authority to sign Federal Register notices pertaining to announcements of meetings and other committee management activities, for both the Centers for Disease Control and Prevention and the Agency for Toxic Substances and Disease Registry.

Dated: January 22, 1999.

Carolyn J. Russell,

Director, Management Analysis and Services Office, Centers for Disease Control and Prevention (CDC).

[FR Doc. 99–2012 Filed 1–27–99; 8:45 am]

BILLING CODE 4163–18–P

DEPARTMENT OF HEALTH AND HUMAN SERVICES

Centers for Disease Control and Prevention

Occupational Exposure to Asphalt; NIOSH Meeting

National Institute for Occupational Safety and Health (NIOSH), Centers for Disease Control and Prevention (CDC) announces the following meeting:

Name: Scientific Review of Draft NIOSH Hazard Review Document, ''Health Effects of Occupational Exposure to Asphalt.''

Time and Date: 1 p.m.–5 p.m., February 26, 1999.

Place: Robert A. Taft Laboratories, Auditorium, NIOSH, CDC, 4676 Columbia Parkway, Cincinnati, Ohio 45226.

Status: Open to the public, limited only by the space available. The meeting room accommodates approximately 100 people.

Purpose: To provide peer review of the draft NIOSH Hazard Review Document, ''Health Effects of Occupational Exposure to Asphalt.'' Participants will provide NIOSH with their individual advice and comments regarding the technical and scientific aspects of the document. Persons wishing to attend or make a presentation at the meeting (limited to 5 minutes), or obtain a copy of the draft document should respond by February 19, 1999, to the contact person listed below.

Contact Person for General Information: Kellie Pierson, Education and Information Division (EID), NIOSH, CDC, 4676 Columbia Parkway, m/s C–34, Cincinnati, Ohio 45226. Telephone 513/533–8362, e-mail kmp0@cdc.gov. Information is also available from the NIOSH Internet Homepage: http://www.cdc.gov/niosh/homepage.html.

Contact Person for Technical Information: Joann Wess, Education and Information Division (EID), NIOSH, CDC, 4676 Columbia Parkway, m/s C–32, Cincinnati, Ohio 45226. Telephone 513/533–8342, e-mail jew4@cdc.gov.

The Director, Management Analysis and Services office has been delegated the authority to sign **Federal Register** notices pertaining to announcements of meetings and other committee management activities, for both the Centers for Disease Control and Prevention and the Agency for Toxic Substances and Disease Registry.

Dated: January 22, 1999.

Carolyn J. Russell,

Director, Management Analysis and Services Office, Centers for Disease Control and Prevention (CDC).

[FR Doc. 99–2011 Filed 1–27–99; 8:45 am]

BILLING CODE 4163–19–P

DEPARTMENT OF HEALTH AND HUMAN SERVICES

Food and Drug Administration

[Docket No. 98E–0616]

Determination of Regulatory Review Period for Purposes of Patent Extension; Prandin™ (5,216,167)

AGENCY: Food and Drug Administration, HHS.

ACTION: Notice.

SUMMARY: The Food and Drug Administration (FDA) has determined the regulatory review period for Prandin™ and is publishing this notice of that determination as required by law. FDA has made the determination because of the submission of an application to the Commissioner of Patents and Trademarks, Department of Commerce, for the extension of a patent which claims that human drug product.

ADDRESSES: Written comments and petitions should be directed to the Dockets Management Branch (HFA–305), Food and Drug Administration, 5630 Fishers Lane, rm. 1061, Rockville, MD 20852.

FOR FURTHER INFORMATION CONTACT: Brian J. Malkin, Office of Health Affairs (HFY–20), Food and Drug Administration, 5600 Fishers Lane, Rockville, MD 20857, 301–827–6620.

SUPPLEMENTARY INFORMATION: The Drug Price Competition and Patent Term Restoration Act of 1984 (Pub. L. 98–417) and the Generic Animal Drug and Patent Term Restoration Act (Pub. L. 100–670) generally provide that a patent may be extended for a period of up to 5 years so long as the patented item (human drug product, animal drug product, medical device, food additive, or color additive) was subject to regulatory review by FDA before the item was marketed. Under these acts, a product's regulatory review period forms the basis for determining the amount of extension an applicant may receive.

A regulatory review period consists of two periods of time: A testing phase and an approval phase. For human drug products, the testing phase begins when the exemption to permit the clinical investigations of the drug becomes effective and runs until the approval phase begins. The approval phase starts with the initial submission of an application to market the human drug product and continues until FDA grants permission to market the drug product. Although only a portion of a regulatory review period may count toward the actual amount of extension that the Commissioner of Patents and Trademarks may award (for example, half the testing phase must be subtracted as well as any time that may have occurred before the patent was issued), FDA's determination of the length of a regulatory review period for a human drug product will include all of the testing phase and approval phase as specified in 35 U.S.C. 156(g)(1)(B).

FDA recently approved for marketing the human drug product Prandin™ (repaglinide). Prandin™ is indicated for use as an adjunct to diet and exercise to lower the blood glucose in patients with type 2 diabetes mellitus (non-insulin dependent diabetes mellitus) whose hyperglycemia cannot be controlled satisfactorily by diet and exercise alone. Subsequent to this approval, the Patent and Trademark Office received a patent term restoration application for Prandin™ (U.S. Patent No. 5,216,167) from Dr. Karl Thomae GmbH, and the Patent and Trademark Office requested FDA's assistance in determining this patent's eligibility for patent term restoration. In a letter dated December 10, 1998, FDA advised the Patent and Trademark Office that this human drug product had undergone a regulatory review period and that the approval of Prandin™ represented the first permitted commercial marketing or use of the product. Shortly thereafter, the Patent and Trademark Office requested that FDA determine the product's regulatory review period.

FDA has determined that the applicable regulatory review period for Prandin™ is 2,091 days. Of this time, 1,916 days occurred during the testing phase of the regulatory review period, while 175 days occurred during the approval phase. These periods of time were derived from the following dates:

1. *The date an exemption under section 505 of the Federal Food, Drug, and Cosmetic Act (the act) (21 U.S.C. 355) became effective*: April 3, 1992. FDA has verified the applicant's claim that the date the investigational new drug application became effective was on April 3, 1992.

2. *The date the application was initially submitted with respect to the human drug product under section 505 of the act*: July 1, 1997. The applicant claims June 1, 2797, as the date the new drug application (NDA) for Prandin™ (NDA 20–741) was initially submitted. However, FDA records indicate that NDA 20–741 was submitted on July 1, 1997.

3. *The date the application was approved*: December 22, 1997. FDA has verified the applicant's claim that NDA 20–741 was approved on December 22, 1997.

This determination of the regulatory review period establishes the maximum potential length of a patent extension. However, the U.S. Patent and Trademark Office applies several statutory limitations in its calculations of the actual period for patent extension. In its application for patent extension, this applicant seeks 922 days of patent term extension.

Anyone with knowledge that any of the dates as published is incorrect may, on or before March 29, 1999, submit to the Dockets Management Branch (address above) written comments and ask for a redetermination. Furthermore, any interested person may petition FDA, on or before July 27, 1999, for a determination regarding whether the applicant for extension acted with due diligence during the regulatory review period. To meet its burden, the petition must contain sufficient facts to merit an FDA investigation. (See H. Rept. 857, part 1, 98th Cong., 2d sess., pp. 41–42, 1984.) Petitions should be in the format specified in 21 CFR 10.30.

Comments and petitions should be submitted to the Dockets Management Branch (address above) in three copies

(except that individuals may submit single copies) and identified with the docket number found in brackets in the heading of this document. Comments and petitions may be seen in the Dockets Management Branch between 9 a.m. and 4 p.m., Monday through Friday.

Dated: January 18, 1999.

Thomas J. McGinnis,

Deputy Associate Commissioner for Health Affairs.

[FR Doc. 99–1936 Filed 1–27–99; 8:45 am]

BILLING CODE 4160–01–F

DEPARTMENT OF HEALTH AND HUMAN SERVICES

Food and Drug Administration

[Docket No. 98E–0475]

Determination of Regulatory Review Period for Purposes of Patent Extension; Prandin (5,312,924)

AGENCY: Food and Drug Administration, HHS.

ACTION: Notice.

SUMMARY: The Food and Drug Administration (FDA) has determined the regulatory review period for Prandin and is publishing this notice of that determination as required by law. FDA has made the determination because of the submission of an application to the Commissioner of Patents and Trademarks, Department of Commerce, for the extension of a patent which claims that human drug product.

ADDRESSES: Written comments and petitions should be directed to the Dockets Management Branch (HFA–305), Food and Drug Administration, 5630 Fishers Lane, rm. 1061, Rockville, MD 20852.

FOR FURTHER INFORMATION CONTACT: Brian J. Malkin, Office of Health Affairs (HFY–20), Food and Drug Administration, 5600 Fishers Lane, Rockville, MD 20857, 301–827–6620.

SUPPLEMENTARY INFORMATION: The Drug Price Competition and Patent Term Restoration Act of 1984 (Pub. L. 98–417) and the Generic Animal Drug and Patent Term Restoration Act (Pub. L. 100–670) generally provide that a patent may be extended for a period of up to 5 years so long as the patented item (human drug product, animal drug product, medical device, food additive, or color additive) was subject to regulatory review by FDA before the item was marketed. Under these acts, a product's regulatory review period forms the basis for determining the amount of extension an applicant may receive.

A regulatory review period consists of two periods of time: A testing phase and an approval phase. For human drug products, the testing phase begins when the exemption to permit the clinical investigations of the drug becomes effective and runs until the approval phase begins. The approval phase starts with the initial submission of an application to market the human drug product and continues until FDA grants permission to market the drug product. Although only a portion of a regulatory review period may count toward the actual amount of extension that the Commissioner of Patents and Trademarks may award (for example, half the testing phase must be subtracted as well as any time that may have occurred before the patent was issued), FDA's determination of the length of a regulatory review period for a human drug product will include all of the testing phase and approval phase as specified in 35 U.S.C. 156(g)(1)(B).

FDA recently approved for marketing the human drug product Prandin (repaglinide). Prandin is indicated for use as an adjunct to diet and exercise to lower the blood glucose in patients with type 2 diabetes mellitus (non-insulin dependent diabetes mellitus) whose hyperglycemia cannot be controlled satisfactorily by diet and exercise alone. Subsequent to this approval, the Patent and Trademark Office received a patent term restoration application for Prandin (U.S. Patent No. 5,312,924) from Dr. Karl Thomae GmbH, and the Patent and Trademark Office requested FDA's assistance in determining this patent's eligibility for patent term restoration. In a letter dated December 10, 1998, FDA advised the Patent and Trademark Office that this human drug product had undergone a regulatory review period and that the approval of Prandin represented the first permitted commercial marketing or use of the product. Shortly thereafter, the Patent and Trademark Office requested that FDA determine the product's regulatory review period.

FDA has determined that the applicable regulatory review period for Prandin is 2,091 days. Of this time, 1,916 days occurred during the testing phase of the regulatory review period, while 175 days occurred during the approval phase. These periods of time were derived from the following dates:

1. The date an exemption under section 505 of the Federal Food, Drug, and Cosmetic Act (the act)(21 U.S.C. 355) became effective: April 3, 1992. FDA has verified the applicant's claim that the date the investigational new drug application became effective was on April 3, 1992.

2. The date the application was initially submitted with respect to the human drug product under section 505 of the act: July 1, 1997. The applicant claims June 27, 1997, as the date the new drug application (NDA) for Prandin (NDA 20–741) was initially submitted.

3. The date the application was approved: December 22, 1997. FDA has verified the applicant's claim that NDA 20–741 was approved on December 22, 1997.

This determination of the regulatory review period establishes the maximum potential length of a patent extension. However, the U.S. Patent and Trademark Office applies several statutory limitations in its calculations of the actual period for patent extension. In its application for patent extension, this applicant seeks 747 days of patent term extension.

Anyone with knowledge that any of the dates as published is incorrect may, on or before March 29, 1999, submit to the Dockets Management Branch (address above) written comments and ask for a redetermination. Furthermore, any interested person may petition FDA, on or before July 27, 1999, for a determination regarding whether the applicant for extension acted with due diligence during the regulatory review period. To meet its burden, the petition must contain sufficient facts to merit an FDA investigation. (See H. Rept. 857, part 1, 98th Cong., 2d sess., pp. 41–42, 1984.) Petitions should be in the format specified in 21 CFR 10.30.

Comments and petitions should be submitted to the Dockets Management Branch (address above) in three copies (except that individuals may submit single copies) and identified with the docket number found in brackets in the heading of this document. Comments and petitions may be seen in the Dockets Management Branch between 9 a.m. and 4 p.m., Monday through Friday.

Dated: January 18, 1999.

Thomas J. McGinnis,

Deputy Associate Commissioner for Health Affairs.

[FR Doc. 99–1937 Filed 1–27–99; 8:45 am]

BILLING CODE 4160–01–F

DEPARTMENT OF HEALTH AND HUMAN SERVICES

Food and Drug Administration

[Docket No. 99N–0053]

Announcement of a Pilot Customer Satisfaction Survey: Medical Device Inspection Evaluation

AGENCY: Food and Drug Administration, HHS.

ACTION: Notice.

SUMMARY: The Food and Drug Administration (FDA) is announcing a 1-year pilot of a customer satisfaction survey entitled ''Medical Device Inspection Evaluation.'' The purpose of the evaluation is to provide a means whereby the medical device industry can provide feedback in an anonymous way to FDA's Office of Regulatory Affairs (ORA) regarding the medical device inspectional process. ORA intends to utilize a third party to collect the evaluations and trend the data submitted.

DATES: Written comments may be submitted at any time between March 1, 1999, through February 28, 2000.

ADDRESSEES: Submit written comments to the Dockets Management Branch (HFA–305), Food and Drug Administration, 5630 Fishers Lane, rm. 1061, Rockville, MD 20852.

FOR FURTHER INFORMATION CONTACT: Denise D. Dion, Office of Regulatory Affairs, Division of Emergency and Investigational Operations (HFC–130), Food and Drug Administration, 5600 Fishers Lane, Rockville, MD 20857, 301–827–5645, e-mail ''ddion@ora.fda.gov''.

SUPPLEMENTARY INFORMATION: The Office of Management and Budget (OMB) has granted approval for this evaluation as a customer satisfaction survey. The evaluation is a followup to FDA/ORA's successful medical device industry initiatives, which included preannounced inspections, FDA 483 annotations, and postinspection notification letters. The Medical Device Industry Initiative Grassroots Taskforce, which includes members from industry and industry trade groups from across the nation as well as from FDA/ORA and FDA/Center for Devices and Radiological Health, is responsible for the design and development of this evaluation tool. The University of California-Irvine (UCI) Center for Statistical Consulting, Irvine, CA, is the third party that will collect and collate the evaluation forms and data. The data trends and findings will be made publicly available and will be shared with industry. The evaluation will be piloted for medical device preapproval, quality system/good manufacturing practices, and other related inspections.

The evaluation forms will contain preprinted information completed by the investigator regarding the name of the firm inspected, date of inspection, whether an FDA 483 was issued, the name of the investigator(s), the applicable FDA District Office and the reason for the inspection. The form will be accompanied by a preaddressed stamped envelope that is to be used to return the form to the UCI Center for Statistical Consulting (UCI). FDA expects the firm official with the most knowledge of the inspection to complete the industry survey portion of the evaluation as soon as possible after the inspection has ended. UCI will report the results by FDA District, FDA Region and nationwide.

The purpose of including investigator and firm identifiers on the evaluation is to assist UCI in obtaining clarifying information if needed and to determine the number of responses received versus the number of inspections conducted. FDA/ORA intends to share FDA's inspectional accomplishments (numbers) with UCI to help facilitate this determination of response rate. Neither the firm nor investigator identifier information will be entered into the data base or shared with FDA or industry.

The information collection provisions in this notice have been approved under OMB control number 0910–0360. An agency may not conduct or sponsor, and a person is not required to respond to, a collection of information unless it displays a currently valid OMB control number.

Interested persons may, at any time between March 1, 1999, through February 28, 2000, submit written comments to the Dockets Management Branch (address above). Two copies of any comments are to be submitted, except that individuals may submit one copy. Comments are to be identified with the docket number found in brackets in the heading of this document. Received comments may be seen in the office above between 9 a.m. and 4 p.m., Monday through Friday.

BILLING CODE 4160–01–F

MEDICAL DEVICE INDUSTRY INITIATIVES TASK FORCE

MEDICAL DEVICE INSPECTION EVALUATION

This Section to be Completed by the FDA

Company Information

Company Name:

Company Address:

Telephone: ( ) Fax: ( ) E-mail:

Type of device(s) inspected:

Dates of Inspection: Start date: ____/____/____ (Month Day Year) End date: ____/____/____ (Month Day Year)

FDA Information

Name of lead investigator:

Number of supporting investigators:

FDA District (circle one): 1-NYK 2-NWE 3-PHI 4-BLT 5-NWJ 6-CIN 7-ATL 8-FLA 9-NSH 10-NOL 11-SJN 12-CHI 13-DET 14-MIN 15-DAL 16-KAN 17-DEN 18-SAN 19-LOS 20-SEA

Was a 483 issued?

1 YES
2 NO

Reason(s) for inspection (circle all that apply):

1 Pre-approval
2 QS/GMP
3 Other (please specify): _____

ALL FOLLOWING TO BE COMPLETED BY THE COMPANY

Definitions:

FDA 483 – FDA form issued to establishment management at the close of inspection if any problem(s) found.
EIR – Establishment Inspection Report
QS/GMP – Quality System/Good Manufacturing Practices

The first set of questions asks what happened before the inspection began. Please circle the number associated with the answer you choose. Your responses to all questions will be kept confidential.

Q-1 Did your company receive advance notification of the inspection?

1 YES
2 NO

(If yes) How many days advance notification did you receive?

_____ NUMBER OF DAYS

Q-2 During the pre-announcement phone call, did you have clarity of inspection requirements as to

a. Products	1 YES	2 NO
b. Records	1 YES	2 NO
c. Personnel	1 YES	2 NO

Q-3 Was it necessary to reschedule the proposed start of the inspection?

1 YES
2 NO

(If yes) Was the impact on your business

1 HELPFUL
2 NEUTRAL
3 DISRUPTIVE

The next set of questions asks about things that may have happened during the inspection.

Q-4 Was it necessary to interrupt the inspection for more than two working days?

1 YES
2 NO

(If yes) Was the interruption requested by

1 FDA
2 YOUR COMPANY

Characterize the impact of the interruption on your company

1 HELPFUL
2 NEUTRAL
3 DISRUPTIVE

Q-5 Were you able to have **all** the right personnel available during the inspection?

1 YES
2 NO → PLEASE EXPLAIN:_____

Q-6 Was your company able to meet **all** the needs of the investigator(s) for records availability?

1 YES
2 NO → PLEASE EXPLAIN:_____

Q-7 During the process of the inspection was your firm always notified daily of the investigator(s) observations?

1 YES
2 NO → PLEASE EXPLAIN:_____

Q-8 Did the investigator(s) provide any helpful information or suggestions?

1 YES
2 NO

The following questions pertain to the outcome of the inspection.

Q-9 Was an FDA 483 issued at the close of the inspection?

1 YES
2 NO → SKIP TO Q-18 ON THE BACK PAGE

Q-10 Were there any corrective actions taken or promised by your company during the process of the inspection? (CIRCLE **ALL** THAT APPLY)

1 YES, TAKEN
2 YES, PROMISED
3 NO, NEITHER → SKIP TO Q-14 ON THE NEXT PAGE

Q-11 Were there any corrective actions taken that were not verified by the FDA inspector(s) and you think could have been?

1 YES
2 NO
3 N/A, NO CORRECTIVE ACTIONS TAKEN

Please list the corrective actions taken which you believe could have been verified by the FDA inspector(s) but were not:

_____

Q-12 Have you already, or do you plan to fulfill any promised actions?

1 YES
2 NO
3 N/A, NO CORRECTIVE ACTIONS PROMISED

(If no) Have you advised the FDA of any changes in plans or delays?

1 YES
2 NO

Q-13 Were the promised or taken corrective actions appropriately annotated on the FDA 483?

1 YES, ALL WERE
2 SOME WERE, SOME WERE NOT
3 NO, NONE WERE

Please list whatever actions you believe were not appropriately annotated on the FDA 483:

_____

Q-14 Were there any inaccuracies on the FDA 483 **other than** those you may have described in Q-13 above?

1 YES
2 NO

(If yes) Were these inaccuracies on the FDA 483 corrected?

1 YES
2 NO → Please describe the situation(s): _____

_____

The final set of questions asks your evaluation of the inspection and about your company's actions.

Q-15 Were all of the observations on the FDA 483 understandable?

1 YES
2 NO → Please comment on what was not clear: _____

Q-16 Other than inaccuracies (noted in Q-14 above), were any of the observations on the FDA 483 inappropriate?

1 YES
2 NO

(If yes) Inappropriate items on the 483 were (CIRCLE **ALL** THAT APPLY):

1 INSIGNIFICANT OBSERVATIONS
2 DIFFERENCE OF INTERPRETATION
3 OTHER → Please explain:_____

Q-17 Do you plan to respond to the FDA 483 observations in writing?

1 YES
2 NO→ Please Explain: _____

Q-18 How did this inspection process compare with past inspections?

1 THIS WAS BETTER → Please explain:_____
2 SAME
3 THIS WAS WORSE → Please explain:_____
4 NEVER BEEN INSPECTED BEFORE

Q-19 Was the highest level executive in your facility in attendance at the final discussion with management?

1 YES
2 NO

Q-20 Worldwide, what is the total number of people your company employs in its medical device division(s)?

_____ NUMBER OF PEOPLE

Finally, we ask that you provide contact information should we need clarification about any of your responses. This is for the use by The UCI Center for Statistical Consulting *only* and will *not* be released to the FDA, to any industry group, or to anyone else.

Person Completing this Evaluation:

Name:

Title:

Telephone:

Fax:

We Invite Your Comments. We would like your suggestions concerning how the FDA inspection process could be improved. In particular, we would appreciate information concerning specific questions. If your comment pertains to a particular question number, it would be helpful if you would note the question number.

_____

_____

_____

_____

_____

_____

Thank you very much for your help!

Please return completed questionnaire to:

Anita Iannucci, Ph.D.
The UCI Center for Statistical Consulting
Social Science Plaza
University of California
Irvine, CA 92697-**5105**
(949) 824-1682 iannucci@uci.edu

Dated: January 21, 1999.

William K. Hubbard,

Associate Commissioner for Policy Coordination.

[FR Doc. 99–2014 Filed 1–27–99; 8:45 am]

BILLING CODE 4160–01–C

DEPARTMENT OF HEALTH AND HUMAN SERVICES

Food and Drug Administration

[Docket No. 98N–0148]

Open Meeting on World Health Organization Recommendations on Ephedrine and Other Substances

AGENCY: Food and Drug Administration, HHS.

ACTION: Notice of public meeting.

SUMMARY: The Food and Drug Administration (FDA) is announcing a public meeting concerning recommendations by the World Health Organization (WHO) to impose international manufacturing and distributing restrictions, under international treaties, on ephedrine and other drug substances. The comments received as a result of this public meeting will be considered in preparing the U.S. position on these proposals for a meeting of the United Nations Commission on Narcotic Drugs (CND) in Vienna, Austria, on March 16 through 25, 1999.

DATES: The public meeting will be held on Friday, February 19, 1999, from 9:30 a.m. to 4 p.m. Notifications on participation and/or attendance should be submitted by Tuesday, February 16, 1999.

ADDRESSES: The public meeting will be held in Parklawn Bldg., conference room C, 5600 Fishers Lane, Rockville, MD 20857.

FOR FURTHER INFORMATION CONTACT: Nicholas P. Reuter, Office of Health Affairs (HFY–20), Food and Drug Administration, 5600 Fishers Lane, Rockville, MD 20857, 301–827–1696, e-mail ''nreuter@oc.fda.gov''.

There is no registration fee, however, space is limited. Participants and persons interested in attending the public meeting should call the contact person listed in this document to register. Registrations also may be transmitted by fax to 1–301–443–0232. Please include the name and title of the person participating or attending, the name of the organization, telephone number, and fax number. An agenda and other information will be compiled after February 16, 1999.

SUPPLEMENTARY INFORMATION: In the **Federal Register** of January 11, 1999 (64 FR 1629), FDA published a notice announcing the WHO recommendations to control substances under international drug control treaties. The notice also provided interested persons with the opportunity to submit written comments and to request an informal public meeting. In response to that notice, FDA received requests for a public meeting. The comments received as a part of this public meeting, along with information submitted in response to the January 11, 1999, notice will be considered in preparing the U.S. position on these proposals for a meeting of the CND in Vienna, Austria, on March 16 through 25, 1999.

Dated: January 22, 1999.

William K. Hubbard,

Associate Commissioner for Policy Coordination.

[FR Doc. 99–2058 Filed 1–27–99; 8:45 am]

BILLING CODE 4160–01–F

DEPARTMENT OF HEALTH AND HUMAN SERVICES

Food and Drug Administration

[Docket No. 99D–0054]

Guidance for Industry on Providing Regulatory Submissions in Electronic Format—NDA's; Availability

AGENCY: Food and Drug Administration, HHS.

ACTION: Notice.

SUMMARY: The Food and Drug Administration (FDA) is announcing the availability of a guidance for industry entitled ''Providing Regulatory Submissions in Electronic Format—NDA's.'' The guidance discusses in detail how to submit a new drug application (NDA) in electronic format to the Center for Drug Evaluation and Research (CDER). A notice of availability for a related guidance entitled ''Providing Regulatory Submissions in Electronic Format—General Considerations'' is being published elsewhere in this issue of the **Federal Register**. It discusses issues common to all submissions in electronic format to CDER and the Center for Biologics Evaluation and Research (CBER). Both guidances are part of a series of guidances being developed by the agency to assist applicants who wish to make regulatory submissions in electronic format. Guidances addressing other submission types, such as biologics license applications, abbreviated new drug applications (ANDA's), and investigational new drug applications (IND's), are being developed and will be issued in the future. Although submissions in electronic format are voluntary, the agency encourages them as a way to improve the efficiency of handling and reviewing documents and data.

DATES: Written comments on agency guidance documents may be submitted at any time.

ADDRESSES: Copies of this guidance for industry can be obtained on the Internet at ''http://www.fda.gov/cder/guidance/index.htm''. Submit written requests for single copies of the guidance to the Drug Information Branch (HFD–210), Center for Drug Evaluation and Research, Food and Drug Administration, 5600 Fishers Lane, Rockville, MD 20857. Send one self-addressed adhesive label to assist that office in processing your requests. Submit written comments on the guidance to the Dockets Management Branch (HFA–305), Food and Drug Administration, 5630 Fishers Lane, rm. 1061, Rockville, MD 20852. Comments are to be identified with the docket number found in brackets in the heading of this notice.

FOR FURTHER INFORMATION CONTACT: Kenneth Edmunds, Center for Drug Evaluation and Research (HFD–73), Food and Drug Administration, 5600 Fishers Lane, Rockville, MD 20857, 301–827–3276, e-mail: ESUB@CDER.fda.gov.

SUPPLEMENTARY INFORMATION: Traditionally, FDA has required that regulatory submissions, such as IND's and NDA's, be submitted as paper documents. In the **Federal Register** of March 20, 1997 (62 FR 13430), FDA published the electronic records and electronic signatures regulation, which provided for the voluntary submission of parts or all of an application, as defined in the relevant regulations, in electronic format without an accompanying paper copy (21 CFR part 11). The agency also established public Docket No. 92S–0251 to provide a list of the agency unit(s) that are prepared to receive electronic submissions and the specific types of records and submissions that can be accepted in electronic format (62 FR 13467, March 20, 1997). Shortly after establishing the docket, CDER published a guidance for industry entitled ''Archiving Submissions in Electronic Format—NDA's'' (62 FR 49695, September 23, 1997), to assist applicants wishing to make electronic submissions. The September 1997 guidance provided specific information on submitting case report forms (CRF's) and case report tabulations (CRT's) as part of the NDA archival submission.

In the **Federal Register** of April 8, 1998 (63 FR 17184), CDER published a draft guidance entitled ''Providing Regulatory Submissions in Electronic Format—NDA's''. This draft guidance expanded on the September 1997 guidance and provided new information

on submitting a complete archival copy of the NDA in electronic format, including CRF's and CRT's. The comment period, which closed on June 8, 1998, was extended 30 days to allow interested parties to review CDER's document together with guidances on electronic submissions published by CBER (63 FR 29741, June 1, 1998). The agency considered received comments as it finalized this guidance. Because of the ever changing nature of this technology, the agency believes that the procedures for submitting electronic applications will continue to evolve over time. To facilitate the updating of guidances on electronic submissions in a timely and efficient manner, the agency has decided to develop one guidance on those topics common to all submission types and to create individual guidances on specific submission types.

Subsequent guidances on other submission types will be issued as they are developed. Consistent with the agency's Good Guidance Practices (62 FR 8961, February 27, 1997), guidances will be issued first in draft for comment, then revised and published in final.

As in the past, applicants planning to make submissions in electronic format should consult public Docket No. 92S–0251 to determine which agency units are prepared to receive electronic submissions and the specific types of documents that can be submitted in electronic format.

This guidance document represents the agency's current thinking on providing NDA's in electronic format to CDER. It does not create or confer any rights for or on any person and does not operate to bind FDA or the public. An alternative approach may be used if such approach satisfies the requirements of the applicable statute, regulations, or both.

Interested persons may submit written comments to the Dockets Management Branch (address above). Two copies of any comments are to be submitted, except that individuals may submit one copy. Comments and requests are to be identified with the docket number found in brackets in the heading of this document. The guidance document and received comments may be seen in the office above between 9 a.m. and 4 p.m., Monday through Friday.

Dated: January 22, 1999.

William K. Hubbard,

Associate Commissioner for Policy Coordination.

[FR Doc. 99–2060 Filed 1–27–99; 8:45 am]

BILLING CODE 4160–01–F

DEPARTMENT OF HEALTH AND HUMAN SERVICES

Food and Drug Administration

[Docket No. 98D–0075]

Guidance for Industry on General Considerations for Providing Regulatory Submissions in Electronic Format; Availability

AGENCY: Food and Drug Administration, HHS.

ACTION: Notice.

SUMMARY: The Food and Drug Administration (FDA) is announcing the availability of a guidance for industry entitled ''Providing Regulatory Submissions in Electronic Format—General Considerations.'' This guidance discusses issues common to all submissions in electronic format to the Center for Drug Evaluation and Research (CDER) and the Center for Biologics Evaluation and Research (CBER). A notice of availability for a related guidance entitled ''Providing Regulatory Submissions in Electronic Format—NDA's'' is being published elsewhere in this issue of the **Federal Register**. Both guidances are part of a series of guidances being developed by the agency to assist applicants who wish to make regulatory submissions in electronic format. Guidances addressing other submission types, such as biologics license applications, abbreviated new drug applications (ANDA's), and investigational new drug applications (IND's), are being developed and will be issued in the future. Although submissions in electronic format are voluntary, the agency encourages them as a way to improve the efficiency of handling and reviewing documents and data.

DATES: Written comments may be submitted at any time.

ADDRESSES: Copies of ''Guidance for Providing Regulatory Submissions in Electronic Format—General Considerations'' can be obtained on the Internet at ''http://www.fda.gov/cder/guidance/index.htm'' or ''http://www.fda.gov/cber/guidelines.htm''. Submit written requests for single copies of the guidance to the Drug Information Branch (HFD–210), Center for Drug Evaluation and Research, Food and Drug Administration, 5600 Fishers Lane, Rockville, MD 20857, or to the Office of Communication, Training and Manufacturers Assistance (HFM–40), Center for Biologics Evaluation and Research, 1401 Rockville Pike, Rockville, MD 20852–1448. Send one self-addressed adhesive label to assist that office in processing your requests. Submit written comments on the guidance to the Dockets Management Branch (HFA–305), Food and Drug Administration, 5630 Fishers Lane, rm. 1061, Rockville, MD 20852.

FOR FURTHER INFORMATION CONTACT: Kenneth Edmunds, Center for Drug Evaluation and Research (HFD–73), Food and Drug Administration, 5600 Fishers Lane, Rockville, MD 20857, 301–827–3276, e-mail: ESUB@CDER.fda.gov; or Michael B. Fauntleroy, Center for Biologics Evaluation and Research, Office of the Director, (HFM–99), Food and Drug Administration, rm. 200N, 1401 Rockville Pike, Rockville, MD 20852–1448, 301–827–5101, e-mail: Esubprep@cber.fda.gov.

SUPPLEMENTARY INFORMATION: Traditionally, FDA has required that regulatory submissions, such as IND's and new drug applications (NDA's), be submitted as paper documents. In the **Federal Register** of March 20, 1997 (62 FR 13430), FDA published the electronic records and electronic signatures regulation, which provided for the voluntary submission of parts or all of an application, as defined in the relevant regulations, in electronic format without an accompanying paper copy (21 CFR part 11). The agency also established public Docket No. 92S–0251 to provide a list of the agency unit(s) that are prepared to receive electronic submissions and the specific types of records and submissions that can be accepted in electronic format (62 FR 13467, March 20, 1997). Shortly after establishing the docket, CDER published a guidance for industry entitled ''Archiving Submissions in Electronic Format—NDA's'' (62 FR 49695, September 23, 1997), to assist applicants wishing to make electronic submissions. The September 1997 guidance provided specific information on submitting case report forms (CRF's) and case report tabulations (CRT's) as part of the NDA archival submission.

In the **Federal Register** of April 8, 1998 (63 FR 17184), CDER published a draft guidance entitled ''Providing Regulatory Submissions in Electronic Format—NDA's''; this draft guidance expanded on the September 1997 guidance and provided new information on submitting a complete archival copy of the NDA in electronic format, including CRF's and CRT's. In June 1998, CBER published four guidances on electronic submissions: (1) ''Electronic Submissions of a Biologics License Application (BLA) Product License Application (PLA)/Establishment License Application

(ELA) to the Center for Biologics Evaluation and Research'' (63 FR 29741, June 1, 1998); (2) ''Electronic Submissions of Case Report Forms (CRF's), Case Report Tabulations (CRT's), and Data to the Center for Biologics Evaluation and Research'' (63 FR 29739, June 1, 1998); (3) ''Pilot Program for Electronic Investigational New Drug Applications (eIND) for Biological Products'' (63 FR 29740, June 1, 1998); and (4) ''Instructions for Submitting Lot Release Protocols to the Center for Biologics Evaluation and Research'' (63 FR 29742, June 1, 1998).

As part of agency efforts to harmonize the procedures for making electronic submissions, FDA has decided to combine certain information from the CDER and CBER guidances into this guidance on general considerations common to all submission types. The agency has considered received comments on the CDER and CBER guidances as it finalized this guidance document. Because of the ever changing nature of electronic submission technology and the need, for now, to recognize existing differences in CDER and CBER systems, the agency has decided to maintain separate guidances on CDER's NDA submissions and CBER's marketing application submissions. The agency will harmonize the concepts in the guidances to the extent our electronic systems permit.

Subsequent guidances on other submission types will be issued as they are developed. Consistent with the agency's Good Guidance Practices (62 FR 8961, February 27, 1997), guidances will be issued first in draft for comment, then revised and issued in final. This final guidance incorporates information from the earlier draft CDER and CBER documents and takes into account comments received on them.

As in the past, applicants planning to make submissions in the electronic format should consult public Docket No. 92S–0251 to determine which agency units are prepared to receive electronic submissions and the specific types of documents that can be submitted in electronic format.

This guidance document represents the agency's current thinking on general considerations for providing regulatory submissions in electronic format. It does not create or confer any rights for or on any person and does not operate to bind FDA or the public. An alternative approach may be used if such approach satisfies the requirements of the applicable statute, regulations, or both.

Interested persons may submit written comments to the Dockets Management Branch (address above). Two copies of any comments are to be submitted, except that individuals may submit one copy. Comments and requests are to be identified with the docket number found in the brackets in the heading of this document. The guidance document and received comments may be seen in the office above between 9 a.m. and 4 p.m., Monday through Friday.

Dated: January 22, 1999.

William K. Hubbard,

Associate Commissioner for Policy Coordination.

[FR Doc. 99–2059 Filed 1–27–99; 8:45 am]

BILLING CODE 4160–01–F

DEPARTMENT OF HEALTH AND HUMAN SERVICES

Food and Drug Administration

[Docket No. 98D–1266]

Draft Guidance for Industry on Placing the Therapeutic Equivalence Code on Prescription Drug Labels and Labeling; Availability

AGENCY: Food and Drug Administration, HHS.

ACTION: Notice.

SUMMARY: The Food and Drug Administration (FDA) is announcing the availability of a draft guidance for industry entitled ''Placing the Therapeutic Equivalence Code on Prescription Drug Labels and Labeling.'' The draft guidance is intended to clarify for prescription drug manufacturers, relabelers, and distributors FDA's position regarding placing the therapeutic equivalence code on approved FDA product labels and labeling. It also provides recommendations on how to display therapeutic equivalence codes on labels and labeling. Inclusion of a therapeutic equivalence code on prescription drug labels/labeling is voluntary.

DATES: Written comments may be submitted by March 29, 1999. General comments on agency guidance documents are welcome at any time.

ADDRESSES: Copies of the draft guidance are available on the Internet at ''http://www.fda.gov/cder/guidance/index.htm''. Submit written requests for single copies of the draft guidance to the Drug Information Branch (HFD–210), Center for Drug Evaluation and Research, Food and Drug Administration, 5600 Fishers Lane, Rockville, MD 20857. Send one self-addressed adhesive label to assist that office in processing your requests. Submit written comments on the draft guidance to the Dockets Management Branch (HFA–305), Food and Drug Administration, 5630 Fishers Lane, rm. 1061, Rockville, MD 20852. Comments are to be identified with the docket number found in brackets in the heading of this document.

FOR FURTHER INFORMATION CONTACT: Jerry Phillips, Center for Drug Evaluation and Research (HFD–610), Food and Drug Administration, 5600 Fishers Lane, Rockville, MD 20857, 301–827–3225.

SUPPLEMENTARY INFORMATION: FDA is announcing the availability of a draft guidance for industry entitled ''Placing the Therapeutic Equivalence Code on Prescription Drug Labels and Labeling.'' With the repeal of section 301(l) of the Federal Food, Drug, and Cosmetic Act (21 U.S.C. 331(l)) as part of the Food and Drug Administration Modernization Act of 1997, FDA believes that it is legally permissible to allow therapeutic equivalence codes to be placed on drug product labels and labeling. The agency also believes that the use of therapeutic equivalence codes will contribute to the accurate and safe selection of generic products by pharmacists. This draft guidance is intended to: (1) Provide a historical perspective on therapeutic equivalence, (2) describe the process by which the agency advises the public on the therapeutic equivalence of approved drug products, and (3) advise manufacturers, relabelers, and distributors of the preferred format and placement of such information on product labels. Although inclusion of a therapeutic equivalence code on prescription drug labels/labeling normally is voluntary, in certain cases where safety issues are raised, the agency may ask that a code be included.

This draft level 1 guidance is being issued consistent with FDA's good guidance practices (62 FR 8961, February 27, 1997). It represents the agency's current thinking on placing the therapeutic equivalence code on the labeling of prescription drug products. It does not create or confer any rights for or on any person and does not operate to bind FDA or the public. An alternative approach may be used if such approach satisfies the requirements of the applicable statute, regulations, or both.

Interested persons may, on or before March 29, 1999, submit to the Dockets Management Branch (address above) written comments on the draft guidance. Two copies of any comments are to be submitted, except that individuals may submit one copy. Comments are to be identified with the docket number found in brackets in the heading of this document. The draft guidance and received comments may be seen in the

office above between 9 a.m. and 4 p.m., Monday through Friday.

Dated: January 21, 1999.

William K. Hubbard,

Associate Commissioner for Policy Coordination.

[FR Doc. 99–2015 Filed 1–27–99; 8:45 am]

BILLING CODE 4160–01–F

DEPARTMENT OF HEALTH AND HUMAN SERVICES

Health Care Financing Administration

[Document Identifier: HCFA–R–0249]

Agency Information Collection Activities: Submission for OMB Review; Comment Request

AGENCY: Health Care Financing Administration, HHS.

In compliance with the requirement of section 3506(c)(2)(A) of the Paperwork Reduction Act of 1995, the Health Care Financing Administration (HCFA), Department of Health and Human Services, is publishing the following summary of proposed collections for public comment. Interested persons are invited to send comments regarding this burden estimate or any other aspect of this collection of information, including any of the following subjects: (1) The necessity and utility of the proposed information collection for the proper performance of the agency's functions; (2) the accuracy of the estimated burden; (3) ways to enhance the quality, utility, and clarity of the information to be collected; and (4) the use of automated collection techniques or other forms of information technology to minimize the information collection burden.

Type of Information Collection Request: New collection; Title of Information Collection: Hospice Cost Report and Supporting Regulations in 42 CFR 413.20, and 413.24; Form No.: HCFA–R–0249 (OMB# 0938-new); Use: Medicare certified hospice programs must file an annual cost report with HCFA. This report contains information on overhead costs, assets, depreciation, and compensation which will be used for hospice rate evaluations.; Frequency: Annually; Affected Public: Not-for-profit institutions, and Business or other for-profit; Number of Respondents: 1,720; Total Annual Responses: 1,720; Total Annual Hours: 302,720.

To obtain copies of the supporting statement and any related forms for the proposed paperwork collections referenced above, access HCFA's Web Site address at http://www.hcfa.gov/regs/prdact95.htm, or E-mail your request, including your address, phone number, OMB number, and HCFA document identifier, to Paperwork@hcfa.gov, or call the Reports Clearance Office on (410) 786–1326. Written comments and recommendations for the proposed information collections must be mailed within 30 days of this notice directly to the OMB desk officer: OMB Human Resources and Housing Branch, Attention: Allison Eydt, New Executive Office Building, Room 10235, Washington, DC 20503.

Dated: January 19, 1999.

John P. Burke III,

HCFA Reports Clearance Officer, HCFA Office of Information Services, Security and Standards Group, Division of HCFA Enterprise Standards.

[FR Doc. 99–2028 Filed 1–27–99; 8:45 am]

BILLING CODE 4120–03–P

DEPARTMENT OF HEALTH AND HUMAN SERVICES

Health Care Financing Administration

[Document Identifier: HCFA–8003]

Agency Information Collection Activities: Submission for OMB Review; Comment Request

AGENCY: Health Care Financing Administration, HHS.

In compliance with the requirement of section 3506(c)(2)(A) of the Paperwork Reduction Act of 1995, the Health Care Financing Administration (HCFA), Department of Health and Human Services, is publishing the following summary of proposed collections for public comment. Interested persons are invited to send comments regarding this burden estimate or any other aspect of this collection of information, including any of the following subjects: (1) The necessity and utility of the proposed information collection for the proper performance of the agency's functions; (2) the accuracy of the estimated burden; (3) ways to enhance the quality, utility, and clarity of the information to be collected; and (4) the use of automated collection techniques or other forms of information technology to minimize the information collection burden.

Type of Information Collection Request: Revision of a currently approved collection; *Title of Information Collection:* Home and Community-Based Services Waiver Requests and Supporting Regulations in 42 CFR 440.180, and 441.301–441.310; *Form No.:* HCFA–8003 (OMB# 0938–0449); *Use:* Under a Secretarial waiver, States may offer a wide array of home and community-based services to individuals who would otherwise require institutionalization. States requesting a waiver must provide certain assurances, documentation and cost & utilization estimates which are reviewed, approved and maintained for the purpose of identifying/verifying States' compliance with such statutory and regulatory requirements. The purpose of this request is to provide authority for the State to furnish such individuals with services in the home and community-based setting; *Frequency:* When a State requests a waiver or amendment to a waiver; *Affected Public:* State, Local or Tribal Government; *Number of Respondents:* 50; *Total Annual Responses:* 128; *Total Annual Hours:* 7,860.

To obtain copies of the supporting statement and any related forms for the proposed paperwork collections referenced above, access HCFA's Web Site address at http://www.hcfa.gov/regs/prdact95.htm, or E-mail your request, including your address, phone number, OMB number, and HCFA document identifier, to Paperwork@hcfa.gov, or call the Reports Clearance Office on (410) 786–1326. Written comments and recommendations for the proposed information collections must be mailed within 30 days of this notice directly to the OMB desk officer: OMB Human Resources and Housing Branch, Attention: Allison Eydt, New Executive Office Building, Room 10235, Washington, D.C. 20503.

Dated: January 19, 1999.

John P. Burke III,

HCFA Reports Clearance Officer, HCFA Office of Information Services, Security and Standards Group, Division of HCFA Enterprise Standards.

[FR Doc. 99–2029 Filed 1–27–99; 8:45 am]

BILLING CODE 4120–03–P

DEPARTMENT OF HEALTH AND HUMAN SERVICES

Office of Inspector General

Draft Compliance Guidance for the Durable Medical Equipment, Prosthetics, Orthotics and Supply Industry

AGENCY: Office of Inspector General (OIG), HHS.

ACTION: Notice and comment period.

SUMMARY: This **Federal Register** notice seeks the comments of interested parties

on draft compliance program guidance developed by the Office of Inspector General for the durable medical equipment, prosthetics, orthotics and supplier (DMEPOS) industry. Through this notice, the OIG is setting forth (1) its general views on the value and fundamental principles of DMEPOS suppliers' compliance programs, and (2) the specific elements that each DMEPOS supplier should consider when developing and implementing an effective compliance program. This document presents basic procedural and structural guidance for designing a compliance program, that is, a set of guidelines to be considered by a DMEPOS supplier interested in implementing a compliance program.

DATES: To assure consideration, comments must be delivered to the address provided below by no later than 5 p.m. on March 1, 1999.

ADDRESSES: Please mail or deliver written comments to the following address: Office of Inspector General, Department of Health and Human Services, Attention: OIG–3N–CPG, Room 5246, Cohen Building, 330 Independence Avenue, S.W., Washington, D.C. 20201.

We do not accept comments by facsimile (FAX) transmission. In commenting, please refer to the file code OIG–3N–CPG. Comments received timely will be available for public inspection as they are received, generally beginning approximately 3 weeks after publication of a document, in Room 5541 of the Office of Inspector General at 330 Independence Avenue, S.W., Washington, D.C. 20201 on Monday through Friday of each week from 8 a.m. to 4:30 p.m.

FOR FURTHER INFORMATION CONTACT: Christine Saxonis, Office of Counsel to the Inspector General, (202) 619–2078.

SUPPLEMENTARY INFORMATION:

A. Background

The creation of compliance program guidance has become a major initiative of the OIG in its efforts to engage the private health care community in addressing and fighting fraud and abuse. Recently, the OIG has developed and issued compliance program guidance directed at various segments of the health care industry in the following areas:

- Clinical laboratories (62 FR 9435; March 3, 1997, as amended in 63 FR 45076; August 24, 1998),
- Hospitals (63 FR 8987; February 23, 1998),
- Home health agencies (63 FR 42410; August 7, 1998), and
- Third party medical billing companies (63 FR 70138; December 18, 1998).

The guidance can also be found on the OIG web site at http://www.dhhs.gov/progorg/oig. The guidance is designed to provide clear direction and assistance to specific sections of the health care industry that are interested in reducing and eliminating fraud and abuse within their organizations.

In an effort to formalize the process by which the OIG obtains public input on the guidances, on August 7, 1998, the OIG published a solicitation notice seeking information and recommendations for developing guidance for the DMEPOS industry (63 FR 42409). In response to that solicitation notice, the OIG received a number of comments from various parts of the industry and their representatives. We have carefully considered previous OIG publications, such as the Special Fraud Alerts and the recent findings and recommendations in reports issued by the OIG's Office of Audit Services and Office of Evaluation and Inspections, as well as the experience of past and recent fraud investigations conducted by the OIG's Office of Investigations and the Department of Justice. We have also consulted with the Health Care Financing Administration and the durable medical equipment regional carriers.

B. Elements Addressed in This Guidance

This draft of DMEPOS guidance contains the following 7 elements that the OIG has determined are fundamental to an effective compliance program:

- Implementing written policies, procedures and standards of conduct;
- Designating a compliance officer and compliance committee;
- Conducting effective training and education;
- Developing effective lines of communication;
- Enforcing standards through well-publicized disciplinary guidelines;
- Conducting internal monitoring and auditing; and
- Responding promptly to detected offenses and developing corrective action.

These elements are contained in the other guidances issued by the OIG. As is the case with the other guidances, the contents of the guidance should not be viewed as mandatory for providers or as an exclusive discussion of the advisable elements of a compliance program.

In an effort to ensure that all parties have an opportunity to provide input into the OIG's guidance, we are publishing this latest guidance in draft form, and welcome any comments from interested parties regarding this guidance, particularly with respect to the section concerning written policies and procedures. We will consider all comments received in a timely manner, incorporate any recommendations as appropriate, and prepare and publish a final version of the DMEPOS guidance later this year.

C. Draft Compliance Program Guidance for the DMEPO Industry

I. Introduction

The Office of Inspector General (OIG) of the Department of Health and Human Services (HHS) continues in its efforts to promote voluntarily developed and implemented compliance programs for the health care industry. The following compliance program guidance is intended to assist suppliers [1] of durable medical equipment,[2] prosthetics,[3] orthotics,[4] and supplies [5] (DMEPOS) and their agents and subcontractors (referred to collectively in this document as ''DMEPOS suppliers'') develop effective internal controls that promote adherence to applicable Federal and State law, and the program requirements of Federal, State and private health plans. The adoption and implementation of voluntary compliance programs significantly advance the prevention of fraud, abuse, and waste in these health care plans while at the same time further the fundamental mission of all DMEPOS suppliers, which is to provide quality items, service, and care to patients.

Within this document, the OIG first provides its general views on the value and fundamental principles of DMEPOS suppliers' compliance programs, and then provides the specific elements that each DMEPOS supplier should consider when developing and implementing an

[1] The term ''supplier'' is defined in this document as an entity or individual, including a physician or Part A provider, which sells or rents Part B covered items. See 42 CFR 424.57(a).

[2] The term ''durable medical equipment'' is applied in this document as defined in 42 U.S.C. 1395x(n).

[3] The term ''prosthetics'' and ''prosthetic devices'' are applied in this document as defined in 42 U.S.C. 1395 x (s)(9) and (s)(8), respectively.

[4] The term ''orthotics'' is applied in this document as defined in 42 U.S.C. 1395x(s)(9).

[5] The term ''supplies'' includes home dialysis supplies and equipment as described in 42 U.S.C. 1395x(s)(2)(f); surgical dressings and other devices as described in 42 U.S.C. 1395x(s)(5); immunosuppressive drugs as described in 42 U.S.C. 1395x(s)(2)(J); and any other items or services designated by the Health Care Financing Administration (HCFA).

effective compliance program. While this document presents basic procedural and structural guidance for designing a compliance program, it is not in itself a compliance program. Rather, it is a set of guidelines to be considered by a DMEPOS supplier interested in implementing a compliance program.

The OIG recognizes the size-differential that exists between operations of the different DMEPOS suppliers and organizations that compose the DMEPOS supplier industry. Appropriately, this guidance is pertinent for all DMEPOS suppliers, regardless of size (in terms of employees and gross revenue); number of locations; type of equipment provided; or corporate structure. The applicability of the recommendations and guidelines provided in this document depends on the circumstances of each individual DMEPOS supplier. However, regardless of a DMEPOS supplier's size or structure, the OIG believes that every DMEPOS supplier can and should strive to accomplish the objectives and principles underlying all of the compliance policies and procedures recommended within this guidance.

Fundamentally, compliance efforts are designed to establish a culture within a DMEPOS supplier that promotes prevention, detection, and resolution of instances of conduct that do not conform to Federal and State law, and Federal, State and private payor health care program requirements, as well as the DMEPOS supplier's ethical and business policies. In practice, the compliance program should effectively articulate and demonstrate the DMEPOS supplier's commitment to ethical conduct. Benchmarks that demonstrate implementation and achievements are essential to any effective compliance program. Eventually, a compliance program should become part of the fabric of routine DMEPOS supplier operations.

Specifically, compliance programs guide a DMEPOS supplier's owner(s), governing body (e.g., board of directors or trustees), chief executive officer (CEO), president, vice presidents, managers, sales representatives, billing personnel, and other employees in the efficient management and operation of a DMEPOS supplier. They are especially critical as an internal quality assurance control in the reimbursement and payment areas, where claims and billing operations are often the source of fraud and abuse, and therefore, historically have been the focus of Government regulation, scrutiny, and sanctions.

It is incumbent upon a DMEPOS supplier's owner(s), corporate officers, and managers to provide ethical leadership to the organization and to assure that adequate systems are in place to facilitate ethical and legal conduct. Employees, managers, and the Government will focus on the words and actions of a DMEPOS supplier's leadership as a measure of the organization's commitment to compliance. Indeed, many DMEPOS suppliers have adopted mission statements articulating their commitment to high ethical standards. A formal compliance program, as an additional element in this process, offers a DMEPOS supplier a further concrete method that may improve quality of service and reduce waste. Compliance programs also provide a central coordinating mechanism for furnishing and disseminating information and guidance on applicable Federal and State statutes, regulations, and Federal, State and private health care program requirements.

Implementing an effective compliance program requires a substantial commitment of time, energy, and resources by senior management and the DMEPOS supplier's governing body.[6] Superficial programs that simply have the appearance of compliance without being wholeheartedly adopted and implemented by the DMEPOS supplier or programs that are hastily constructed and implemented without appropriate ongoing monitoring will likely be ineffective and could expose the DMEPOS supplier to greater liability than no program at all. Although it may require significant additional resources or reallocation of existing resources to implement an effective compliance program, the long term benefits of implementing the program significantly outweigh the costs. Undertaking a voluntary compliance program is a beneficial investment that advances both the DMEPOS supplier's organization and the stability and solvency of the Medicare program.

A. Benefits of a Compliance Program

The OIG believes an effective compliance program provides a mechanism that brings the public and private sectors together to reach mutual goals of reducing fraud and abuse, improving operational quality, improving the quality of health care services and reducing the cost of health care. Attaining these goals provides positive results to the DMEPOS supplier, the Government and individual citizens alike. In addition to fulfilling its legal duty to ensure that it is not submitting false or inaccurate claims to Government and private payors, a DMEPOS supplier may gain numerous additional benefits by voluntarily implementing an effective compliance program. These benefits may include:

- The formulation of effective internal controls to assure compliance with Federal and State statutes, rules, and regulations, and Federal, State and private payor health care program requirements, and internal guidelines;
- A concrete demonstration to employees and the community at large of the DMEPOS supplier's strong commitment to honest and responsible corporate conduct;
- The ability to obtain an accurate assessment of employee and contractor behavior relating to fraud and abuse;
- An increased likelihood of identification and prevention of criminal and unethical conduct;
- The ability to more quickly and accurately react to employees' operational compliance concerns and the capability to effectively target resources to address those concerns;
- Improvement of the quality, efficiency, and consistency of providing services;
- Increased efficiency on the part of employees;
- A centralized source for distributing information on health care statutes, regulations, policies, and other program directives regarding fraud and abuse and related issues;
- Improved internal communication;
- A methodology that encourages employees to report potential problems;
- Procedures that allow the prompt, thorough investigation of alleged misconduct by corporate officers, managers, sales representatives, employees, independent contractors, consultants, clinicians, and other health care professionals;
- Initiation of immediate, appropriate, and decisive corrective action;
- Early detection and reporting, minimizing the loss to the Government from false claims, and thereby reducing the DMEPOS supplier's exposure to civil damages and penalties, criminal sanctions, and administrative remedies, such as program exclusion;[7] and

[6] Recent case law suggests that the failure of a corporate Director to attempt in good faith to institute a compliance program in certain situations may be a breach of a Director's fiduciary obligation. See, e.g., *In re Caremark International Inc. Derivative Litigation*, 698 A.2d 959 (Ct. Chanc. Del. 1996).

[7] The OIG, for example, will consider the existence of an *effective* compliance program that pre-dated any governmental investigation when addressing the appropriateness of administrative sanctions. However, the burden is on the DMEPOS

Continued

• Enhancement of the structure of the DMEPOS supplier's operations and the consistency between: any related entities of the DMEPOS supplier; different departments within the DMEPOS supplier; the DMEPOS supplier's different locations; and the DMEPOS supplier's separate business units (e.g., franchises, subsidiaries).

Overall, the OIG believes that an effective compliance program is a sound investment on the part of a DMEPOS supplier.

The OIG recognizes that the implementation of a compliance program may not entirely eliminate fraud, abuse, and waste from the DMEPOS supplier system. However, a sincere effort by DMEPOS suppliers to comply with applicable Federal and State statutes, rules, and regulations and Federal, State and private payor health care program requirements, through the establishment of an effective compliance program, significantly reduces the risk of unlawful or improper conduct.

B. Application of Compliance Program Guidance

Given the diversity within the industry, there is no single ''best'' DMEPOS supplier compliance program.[8] The OIG understands the variances and complexities within the DMEPOS supplier industry and is sensitive to the differences among large national and regional DMEPOS supplier organizations, and small independent DMEPOS suppliers. However, elements of this guidance can be used by all DMEPOS suppliers, regardless of size (in terms of employees and gross revenue); number of locations; type of equipment provided; or corporate structure, to establish an effective compliance program. Similarly, a DMEPOS supplier or corporation that owns a DMEPOS supplier or provides DMEPOS supplies may incorporate these elements into its system-wide compliance or managerial structure.[9] We recognize that some DMEPOS suppliers may not be able to adopt certain elements to the same comprehensive degree that others with more extensive resources may achieve. This guidance represents the OIG's suggestions on how a DMEPOS supplier can best establish internal controls and monitor its conduct to correct and prevent fraudulent activities. By no means should the contents of this guidance be viewed as an exclusive discussion of the advisable elements of a compliance program. On the contrary, the OIG strongly encourages DMEPOS suppliers to develop and implement compliance elements that uniquely address the individual DMEPOS supplier's risk areas.

The OIG believes that input and support by individuals and organizations that will utilize the tools set forth in this document is critical to the development and success of this compliance program guidance. In a continuing effort to collaborate closely with the private sector, the OIG placed a notice in the **Federal Register** soliciting recommendations and suggestions on what should be included in this compliance program guidance.[10] Further, we considered previous OIG publications, such as Special Fraud Alerts, advisory opinions,[11] the findings and recommendations in reports issued by OIG's Office of Audit Services and Office of Evaluation and Inspections, as well as the experience of past and recent fraud investigations related to DMEPOS suppliers conducted by OIG's Office of Investigations and the Department of Justice.

As appropriate, this guidance may be modified and expanded as more information and knowledge is obtained by the OIG, and as changes in the statutes, rules, regulations, policies, and procedures of the Federal, State and private health plans occur. The OIG understands DMEPOS suppliers will need adequate time to react to these modifications and expansions and to make any necessary changes to their voluntary compliance programs. New compliance practices may eventually be incorporated into this guidance if the OIG discovers significant enhancements to better ensure an effective compliance program.

The OIG recognizes that the development and implementation of compliance programs in DMEPOS suppliers often raise sensitive and complex legal and managerial issues.[12] However, the OIG wishes to offer what it believes is critical guidance for providers who are sincerely attempting to comply with the relevant health care statutes and regulations.

II. Compliance Program Elements

The elements proposed by these guidelines are similar to those of the other OIG compliance program guidances[13] and the OIG's corporate integrity agreements.[14] The OIG believes that every DMEPOS supplier can benefit from the principles espoused in this guidance, which can be tailored to fit the needs and financial realities of a particular DMEPOS supplier.

The OIG believes that every effective compliance program must begin with a formal commitment[15] by the DMEPOS supplier's governing body to include *all* of the applicable elements listed below, which are based on the seven steps of the Federal Sentencing Guidelines.[16] The OIG recognizes full implementation of all elements may not be immediately feasible for all DMEPOS suppliers. However, as a first step, a good faith and meaningful commitment on the part of

supplier to demonstrate the operational effectiveness of a compliance program. Further, the False Claims Act, 31 U.S.C. 3729–3733, provides that a person who has violated the Act, but who voluntarily discloses the violation to the Government within 30 days of detection, in certain circumstances will be subject to not less than double, as opposed to treble, damages. See 31 U.S.C. 3729(a). Thus, the ability to react quickly when violations of the law are discovered may materially help reduce the DMEPOS supplier's liability.

[8] This is particularly true in the context of DMEPOS suppliers, which include many small independent DMEPOS suppliers with limited financial resources and staff, as well as large DMEPOS supplier chains with extensive financial resources and staff.

[9] For Medicare, this would include any individual or entity that meets the supplier standards as described in 42 CFR 424.57 and has a National Supplier Clearinghouse Number.

[10] See 63 FR 42409 (August 7, 1998), Notice for Solicitation of Information and Recommendations for Developing OIG Compliance Program Guidance for the Durable Medical Equipment Industry.

[11] The OIG periodically issues advisory opinions responding to specific inquiries from members of the public and Special Fraud Alerts setting forth activities that raise legal and enforcement issues. Special Fraud Alerts and Advisory Opinions, as well as the regulations governing issuance of advisory opinions can be obtained on the Internet at: http://www.dhhs.gov/progorg/oig, in the **Federal Register**, or by contacting the OIG's Public Information Desk at (202) 619–1142.

[12] Nothing stated within this document should be substituted for, or used in lieu of, competent legal advice from counsel.

[13] See 63 FR 70138 (December 18, 1998) for the Compliance Program Guidance for Third Party Medical Billing Companies; 63 FR 42410 (August 7, 1998) for the Compliance Program Guidance for Home Health Agencies; 63 FR 45076 (August 24, 1998) for the Compliance Program Guidance for Clinical Laboratories, as revised; 63 FR 8987 (February 23, 1998) for the Compliance Program Guidance for Hospitals. These documents are also located on the Internet at http://www.dhhs.gov/progorg/oig.

[14] Corporate integrity agreements are executed as part of a civil settlement between a health care provider or entity responsible for billing on behalf of the provider and the Government to resolve a case based on allegations of health care fraud or abuse. These OIG-imposed programs are in effect for a period of three to five years and require many of the elements included in this compliance program guidance.

[15] A formal commitment may include a resolution by the board of directors, owner(s) or president, where applicable. A formal commitment should include the allocation of adequate resources to ensure that each of the elements is addressed.

[16] See United States Sentencing Commission Guidelines, *Guidelines Manual*, 8A1.2, Application Note 3(k). The Federal Sentencing Guidelines are detailed policies and practices for the Federal criminal justice system that prescribe the appropriate sanctions for offenders convicted of Federal crimes.

the DMEPOS supplier, especially the owner(s), governing body, president, vice presidents, CEO, and managing employees, will substantially contribute to the program's successful implementation. As the compliance program is implemented, that commitment should cascade down through the management to every employee of the DMEPOS supplier.

At a minimum, comprehensive compliance programs should include the following seven elements:

(1) The development and distribution of written standards of conduct, as well as written policies and procedures that promote the DMEPOS supplier's commitment to compliance (e.g., by including adherence to the compliance program as an element in evaluating managers and employees) and address specific areas of potential fraud, such as claims development and submission processes, completing certificates of medical necessity (CMNs), and financial relationships with physicians and/or other persons authorized to order DMEPOS;

(2) The designation of a compliance officer and other appropriate bodies, (e.g., a corporate compliance committee), charged with the responsibility for operating and monitoring the compliance program, and who report directly to the CEO and the governing body; [17]

(3) The development and implementation of regular, effective education and training programs for all affected employees; [18]

(4) The creation and maintenance of a process, such as a hotline or other reporting system, to receive complaints, and the adoption of procedures to protect the anonymity of complainants and to protect callers from retaliation;

(5) The development of a system to respond to allegations of improper/illegal activities and the enforcement of appropriate disciplinary action against employees who have violated internal compliance policies, applicable statutes, regulations, or Federal, State or private payor health care program requirements; [19]

(6) The use of audits and/or other risk evaluation techniques to monitor compliance, identify problem areas, and assist in the reduction of identified problem areas; [20] and

(7) The investigation and remediation of identified systemic problems and the development of policies addressing the non-employment or retention of sanctioned individuals.

A. Written Policies and Procedures

Every compliance program should require the development and distribution of written compliance policies, standards, and practices that identify specific areas of risk and vulnerability to the individual DMEPOS supplier. These policies, standards, and practices should be developed under the direction and supervision of the compliance officer and the compliance committee (if such a committee is practicable for the DMEPOS supplier) and, at a minimum, should be provided to all individuals who are affected by the particular policy at issue, including the DMEPOS supplier's agents and independent contractors who may affect billing decisions.[21] In addition to these general corporate policies, it may be necessary to implement individual policies for the different components of the DMEPOS supplier.

1. Standards of Conduct. DMEPOS suppliers should develop standards of conduct for all affected employees that include a clearly delineated commitment to compliance by the DMEPOS supplier's senior management,[22] including any related entities or affiliated providers operating under the DMEPOS supplier's control,[23] and other health care professionals (e.g., nurses, licensed pharmacists, physicians, and respiratory therapists). The standards of conduct should function in the same fashion as a constitution, i.e., as a foundational document that details the fundamental principles, values, and framework for action within the DMEPOS supplier. The standards should articulate the DMEPOS supplier's commitment to comply with all Federal and State statutes, rules, regulations and Federal, State and private payor health care program requirements, with an emphasis on preventing fraud and abuse. They should explicitly state the organization's mission, goals, and ethical principles relative to compliance and clearly define the DMEPOS supplier's commitment to compliance and its expectations for all DMEPOS supplier owners, governing body members, president, vice presidents, corporate officers, managers, sales representatives, employees, and, where appropriate, independent contractors and other agents. These standards should promote integrity, support objectivity, and foster trust. Standards should not only address compliance with statutes and regulations, but should also set forth broad principles that guide employees in conducting business professionally and properly.

The standards should be distributed to, and comprehensible by, all affected employees (e.g., translated into other languages when necessary and written at appropriate reading levels). Further, to assist in ensuring that employees continuously meet the expected high standards set forth in the standards of conduct, any employee handbook delineating or expanding upon these standards should be regularly updated as applicable statutes, regulations, and Federal, State and private payor health care program requirements are modified and/or clarified.[24]

[17] The integral functions of the compliance officer and the corporate compliance committee in implementing an effective compliance program are discussed throughout this compliance program guidance. However, the OIG recognizes that the differences in the sizes and structures of DMEPOS suppliers will result in differences in the ways in which compliance programs are set up. The important thing is that the DMEPOS supplier structures its compliance program in such a way that the program is able to accomplish the key functions of the corporate compliance officer and the corporate compliance committee discussed within this document.

[18] Training and education programs for DMEPOS suppliers should be detailed and comprehensive. They should cover specific billing procedures, sales and marketing practices, as well as the general areas of compliance. See section II.C and accompanying notes.

[19] The term ''Federal health care programs'' is applied in this document as defined in 42 U.S.C. 1320a–7b(f), which includes any plan or program that provides health benefits, whether directly, through insurance, or otherwise, which is funded directly, in whole or in part, by the United States Government (i.e., via programs such as Medicare, Federal Employees' Compensation Act, Black Lung, or the Longshore and Harbor Worker's Compensation Act) or any State health plan (e.g., Medicaid, or a program receiving funds from block grants for social services or child health services). Also, for the purposes of this document, the term ''Federal health care program requirements'' refers to the statutes, regulations, rules, requirements, directives, and instructions governing Medicare, Medicaid, and all other Federal health care programs.

[20] For example, spot-checking the work of coding and billing personnel periodically should be an element of an effective compliance program.

[21] According to the Federal Sentencing Guidelines, an organization must have established compliance standards and procedures to be followed by its employees and other agents in order to receive sentencing credit for an ''effective'' compliance program. The Federal Sentencing Guidelines define ''agent'' as ''any individual, including a director, an officer, an employee, or an independent contractor, authorized to act on behalf of the organization.'' See United States Sentencing Commission Guidelines, *Guidelines Manual*, 8A1.2, Application Note 3(d).

[22] The OIG strongly encourages high-level involvement by the DMEPOS supplier's owner(s), governing body, chief executive officer, president, vice presidents, as well as other personnel, as appropriate, in the development of standards of conduct. Such involvement should help communicate a strong and explicit organizational commitment to compliance goals and standards.

[23] E.g., pharmacies, billing services, and manufacturers.

[24] The OIG recognizes that not all statutes, rules, regulations, standards, policies, and procedures need to be communicated to all employees.

Continued

When employees first begin working for the DMEPOS supplier, and each time new standards of conduct are issued, the OIG suggests employees be asked to sign a statement certifying that they have received, read, and understood the standards of conduct. The employee's certification should be retained by the DMEPOS supplier in the employee's personnel file, and available for review by the compliance officer.

2. Written Policies for Risk Areas. As part of its commitment to compliance, DMEPOS suppliers should establish a comprehensive set of written policies and procedures that take into consideration the particular statutes, rules, regulations and program instructions applicable to each function of the DMEPOS supplier.[25] In contrast to the standards of conduct, which are designed to be a clear and concise collection of fundamental standards, the written policies should articulate specific procedures personnel should follow.

Consequently, we recommend that the individual policies and procedures be coordinated with the appropriate training and educational programs with an emphasis on areas of special concern that have been identified by the OIG.[26] Some of the special areas of OIG concern include:[27]

- Billing for items or services not provided;[28]
- Billing for medically unnecessary services;[29]
- Duplicate billing;[30]
- Billing for items or services not ordered;[31]
- Using a billing agent whose compensation is based on the dollar amounts billed or based on the actual collection of payment;[32]
- Upcoding;[33]
- Billing patients for denied charges without a signed written notice;[34]
- Unbundling items or supplies;[35]
- Billing for new equipment and providing used equipment;[36]
- Continuing to bill for rental items after they are no longer medically necessary;[37]
- Resubmission of denied claims with different and incorrect information in an attempt to be reimbursed;[38]
- Refusing to submit a claim to Medicare;[39]
- Inadequate management and oversight of contracted services, which results in improper billing;[40]

Charge limitations;[41]

- Providing and/or billing substantially excessive amounts of DMEPOS items or supplies;[42]

However, the OIG believes that the bulk of the standards that relate to complying with fraud and abuse laws and other ethical areas should be addressed and made part of all affected employees' training. The DMEPOS supplier must decide whether additional educational programs should be targeted to specific categories of employees based on job functions and areas of responsibility.

[25] A DMEPOS supplier can conduct focus groups composed of managers from various departments to solicit their concerns and ideas about compliance risks that may be incorporated into the DMEPOS supplier's policies and procedures. Such employee participation in the development of the DMEPOS supplier's compliance program can enhance its credibility and foster employee acceptance of the program.

[26] DMEPOS supplier compliance programs should require that the legal staff, compliance officer, or other appropriate personnel carefully consider any and all Special Fraud Alerts and advisory opinions issued by the OIG that relate to DMEPOS suppliers. See note 11. Moreover, the compliance programs should address the ramifications of failing to cease and correct any conduct criticized in such a Special Fraud Alert or advisory opinion, if applicable to DMEPOS suppliers, or to take reasonable action to prevent such conduct from reoccurring in the future. If appropriate, a DMEPOS supplier should take the steps described in section G regarding investigations, reporting, and correction of identified problems.

[27] The OIG's work plan is currently available on the Internet at: http://www.dhhs.gov/progorg/oig. The OIG Work Plan details the various projects of the Office of Audit Services, Office of Evaluation and Inspections, Office of Investigations, and Office of Counsel to the Inspector General that are planned to be addressed during each Fiscal Year.

[28] Billing for items or services not provided involves submitting a claim representing the DMEPOS supplier provided an item or service or part of an item or service that the patient did not receive.

[29] Billing for medically unnecessary services involves seeking reimbursement for a service that is not warranted by the patient's current and documented medical condition. See 42 U.S.C. 1395y(a)(1)(A) (''no payment may be made under part A or part B [of Medicare] for any expenses incurred for items or services which . . . are not reasonable and necessary for the diagnosis or treatment of illness or injury or to improve the functioning of the malformed body member''). Upon submission of a HCFA claim form (whether paper or electronic), a DMEPOS supplier certifies that the services provided and billed were medically necessary for the health of the beneficiary, and were provided in accordance with orders by the beneficiary's treating physician or other authorized person. In limited instances, HCFA does allow DMEPOS suppliers to submit claims when the DMEPOS supplier believes the item or service may be denied. Such instances include, but are not limited to: when a beneficiary has signed a written notice (see *Medicare Carriers Manual*, section 7300.5) (See also section II.A.3.i for further discussion on written notices); and when the beneficiary requests the DMEPOS supplier to submit the claim (see *Medicare Carriers Manual*, section 3043). In the first instance, the DMEPOS supplier should include modifier ''GA'' on the claim, which indicates the beneficiary has signed a written notice. In the latter instance, the DMEPOS supplier should use modifier ''ZY.'' Civil monetary penalties and administrative sanctions may be imposed against any person who submits a claim for services ''that [the] person knows or should know are not medically necessary.'' See 42 U.S.C. 1320a–7a(a). Remedies may also be available under criminal and civil law, including the False Claims Act. See discussion in section II.A.3.a and accompanying notes.

[30] Duplicate billing occurs when more than one claim for payment is submitted for the same patient, for the same service, for the same date of service (by the same or different DMEPOS suppliers), or the same claim is submitted to more than one primary payor. Although duplicate billing can occur due to simple error, fraudulent duplicate billing is evidenced by systematic or repeated double billing, and creates liability under criminal, civil, or administrative law, particularly if any overpayment is not promptly refunded.

[31] Billing for items or services not ordered involves seeking reimbursement for services provided but not ordered by the treating physician or other authorized person.

[32] DMEPOS supplier billing agents may only receive payment based on a fixed fee, and not based upon a percentage of revenue. See 42 U.S.C. 1395u(b)(6); 42 CFR 424.73; *Medicare Carriers Manual*, section 3060; 3060.10.

[33] Upcoding involves selecting a code to maximize reimbursement when such a code is not the most appropriate descriptor of the service (e.g., billing for a more expensive piece of equipment when a less expensive piece of equipment is provided).

[34] This includes, but is not limited to, billing the patient for items or services denied by the payor on assigned claims, where there has been no written notice signed by the patient, the written notice has been inappropriately obtained or the written notice was drafted inappropriately. See *Medicare Carrier Manual*, section 7300.5A, regarding the requirements for written notice.

[35] Unbundling items or supplies involves billing for individual components when a specific HCPCs code provides for the components to be billed as a unit (e.g., providing a wheelchair and billing the individual parts of the wheelchair, rather than the wheelchair as a whole).

[36] The DMEPOS supplier must indicate on the Medicare claim form, through the use of modifiers, whether the item provided is new or used. The modifier for providing new equipment is ''NU.'' The modifier for providing used equipment is ''UE.'' A knowing failure to correctly document the item provided would constitute falsifying information on the claim form and would constitute a violation of the False Claims Act. See 31 U.S.C. 3729.

[37] Once a rental item is no longer medically necessary, the DMEPOS supplier is required to discontinue billing the payor for it. In addition, the OIG recommends the DMEPOS supplier pick up such equipment from the patient in a timely manner.

[38] This practice involves the DMEPOS supplier improperly changing information on a previously denied claim and continuing to resubmit the claim in an attempt to receive payment.

[39] This practice involves a DMEPOS supplier not submitting a claim to the Medicare program on behalf of the beneficiary. Irrespective of whether or not a DMEPOS supplier accepts assignment, it is obligated to submit the claim on behalf of the beneficiary. See 42 U.S.C 1395w–4(g)(4).

[40] DMEPOS suppliers should create internal mechanisms to ensure that the use of contractors does not lead to improper billing practices.

[41] DMEPOS suppliers should ensure their billing personnel are informed of the different payment rules of all Federal, State, and private health care programs they bill. DMEPOS suppliers should be aware that billing for items or services furnished substantially in excess of the DMEPOS supplier's usual charges may result in exclusion. See 42 U.S.C. 320a–7(b)(6)(A). See also OIG Ad. Op. 98–8 (1998) regarding this issue.

[42] This practice, which constitutes overutilization, involves providing and/or billing for substantially more items or supplies than are reasonable and necesssary for the needs of each individual patient. Such practices may lead to exclusion from Federal health care programs. See 42 U.S.C. 1320a–7(b)(6)(B).

• Providing and/or billing for an item or service that does not meet the quality and standard of the DMEPOS item claimed (e.g., item provided is in violation of Food and Drug Administration (FDA) regulations and standards); [43]

• Capped rentals; [44]

• Failure to monitor medical necessity on an on-going basis; [45]

• Dispensing certain items or supplies prior to receiving a physician's order and/or appropriate CMN; [46]

• Falsifying information on the claim form, CMN, and/or accompanying documentation; [47]

• Completing portions of CMNs reserved for completion only by treating physician or other authorized person; [48]

• Altering medical records; [49]

• Manipulating the patient's diagnosis in order to receive payment; [50]

• Failing to maintain medical necessity documentation; [51]

• Inappropriate use of place of service codes; [52]

• Inappropriate use of cover letters; [53]

• Improper use of ZX modifier; [54]

• Providing incentives to actual or potential referral sources (e.g., physicians, hospitals, patients, etc.) that may violate the anti-kickback statute or other similar Federal or State statute or regulation; [55]

• Compensation programs that offer incentives for items or services ordered and revenue generated; [56]

• Routine waiver of deductibles and coinsurance; [57]

• Joint ventures between parties, one of whom can refer Medicare or Medicaid business to the other; [58]

• Situations where conflict of interest may result due to referrals by physicians that own or have compensation arrangements with DMEPOS supply companies; [59]

• Billing for items or services furnished pursuant to a prohibited referral under the Stark physician self-referral law; [60]

• Improper telemarketing practices; [61]

• Improper patient solicitation activities and high-pressure marketing of non-covered or unnecessary services; [62]

• Co-location of DMEPOS items and supplies with the referral source; [63]

[43] This practice involves providing and/or billing for an item or service that does not meet the definition and/or requirement of the item or service ordered by the treating physician or other authorized person. Generally, such items are inferior in quality, and therefore, do not meet the definition of what was ordered and/or billed. Sometimes this may mean that products were never determined to be safe and effective by the FDA, as required by law. This practice may lead to billing for items that are not reasonable and necessary. DMEPOS suppliers should ensure that the items or services they furnish meet professionally recognized minimum standards of health care.

[44] See discussion in section II.A.3.k and accompanying notes.

[45] In order for a patient to continue to receive items or supplies (e.g., rental equipments, supplies for an on-going condition), the patient must meet the medical necessity criteria for that specific item or supply on an on-going basis. The items or supplies furnished by the DMEPOS supplier should be replaced or adjusted, in a timely manner, to reflect changes in the patient's condition.

[46] This practice involves the DMEPOS supplier dispensing to the patient, and/or billing the payor for, items or supplies that have not yet been ordered by the treating physician or other authorized person. Medicare requires written physician orders for certain items before dispensing. See 42 CFR 410.38.

[47] This practice involves supplying false information to be included on the claim form, the CMN, or other accompanying documentation. The information reported on these documents should accurately reflect the patient's information, including medical information, and the items or services ordered by the treating physician or other authorized person and provided by the DMEPOS supplier.

[48] This practice involves not completing the CMN in compliance with Medicare regulations (i.e., sections B and D should never be completed by the supplier). Instructions for completing the CMN can be found on the back of the form. See section 3312 of the *Medicare Carriers Manual,* which provides instructions on how to complete the CMN and the civil monetary penalties (CMPs) that may be assessed for improper completion of the CMN. See also 42 U.S.C. 1395m(j)(2); section II.A.3.c and accompanying notes for further discussion on CMNs.

[49] This practice involves the DMEPOS supplier falsifying information on the medical records to justify reimbursement for an item or service.

[50] This practice involves the DMEPOS supplier incorrectly altering the diagnosis in order to receive reimbursement for the particular item or service. A DMEPOS supplier should not claim the patient has a particular medical condition in order to qualify for an item for which he or she would not otherwise qualify.

[51] This practice involves failing to ensure that the medical necessity documentation requirements for the item or service billed are properly met (e.g., failing to maintain the original physician orders or CMNs or failing to ensure that CMNs contain adequate and correct information). See section 4105.2 of the *Medicare Carriers Manual* for evidence of medical necessity. See also sections II.A.3.b and II.A.3.c regarding physician orders and CMNs, respectively.

[52] This practice involves indicating on the claim form that the place of service is a location other than where the service was provided. For example, the patient resides in a skilled nursing facility (SNF) and the DMEPOS supplier submits a claim with the place of service being the patient's home. Provided that the DMEPOS items or services are ordered, provided, reasonable and necessary given the clinical condition of the patient, the items or services may be covered if the beneficiary resides at home. However, such items may not be covered if the beneficiary resides in a SNF. See *Medicare Carriers Manual,* section 2100.3 for the definition of a beneficiary's home.

[53] This practice involves sending the treating physician or other authorized person a cover letter attached to the CMN that contains information that the physician is supposed to include on the CMN or otherwise may lead the physician to order medically unnecessary equipment or supplies for the specified patient. Cover letters should only be used to describe what is being ordered and how it is to be administered. See discussion in section II.A.3.m.

[54] This practice involves the improper use of the ZX modifier, relating to maintaining medical necessity documentation. See discussion in section II.A.3.l.

[55] Examples of arrangements that may run afoul of the anti-kickback statute include practices in which a DMEPOS supplier pays a fee to a physician for each CMN the physician signs, provides free gifts to physicians for signing CMNs, and/or provides items or services for free or below fair market value to providers or beneficiaries of Federal health care programs. *See* 42 U.S.C. 1320a–7b(b); 60 FR 40847 (August 10, 1995). See also discussion in section II.A.4. and accompanying notes.

[56] Compensation programs that offer incentives for items or services ordered or the revenue they generate may lead to the ordering of medically unnecessary items or supplies and/or the ''dumping'' of such items or supplies in a facility or in a beneficiary's home (e.g., mail order supply companies that continue to send the patient supplies when the supplies are no longer medically necessary).

[57] See discussion in section II.A.3.j and accompanying notes.

[58] Equally troubling to the OIG is the proliferation of business arrangements that may violate the anti-kickback statute. Such arrangements are generally established between those in a position to refer business, such as physicians, and those providing items or services, such as a DMEPOS supplier, for which a Federal health care program pays. Sometimes established as ''joint ventures,'' these arrangements may take a variety of forms. The OIG currently has a number of investigations and audits underway that focus on such areas of concern. The OIG has also issued a Special Fraud Alert on Joint Venture Arrangements. This Special Fraud Alert can be found at 59 FR 65372 (December 19, 1994) or on the Internet at: http://www.dhhs.gov/progorg/oig.

[59] See 42 U.S.C. 1395nn.

[60] Under the Stark physician self-referral law, if a physician (or an immediate family member of such physician) has a financial relationship with a DMEPOS supplier, the physician may not make a referral to the DMEPOS supplier and the DMEPOS supplier may not bill for furnishing DMEPOS items or supplies for which payment may be made under the Federal health care programs. See 42 U.S.C. 1395nn.

[61] See 42 U.S.C. 1395m(a)(17) or Pub.L. 103–432, section 132(a) for the prohibition on telemarketing. See also discussion in section II.A.5 and accompanying notes.

[62] DMEPOS suppliers should not utilize prohibited or inappropriate conduct to carry out their initiatives and activities designed to maximize business growth and patient retention. Many cases against DMEPOS suppliers have involved the DMEPOS supplier giving the beneficiary free gifts such as angora underwear, microwaves and air conditioners in exchange for providing and billing for unnecessary items. Any marketing information offered by DMEPOS suppliers should be clear, correct, non-deceptive, and fully informative. See discussion in section II.A.5 and accompanying notes.

[63] In this situation, a physician allows a DMEPOS supplier to stock space (space may or may not be rented by the DMEPOS supplier) in a physician's office with DMEPOS items and supplies. When such items and supplies are dispensed to the patient, Medicare is then billed. DEMPOS suppliers should check the policy of the individual durable medical equipment regional carrier(s) (DMERC) they bill with regard to this arrangement. Although such arrangements are not prohibited by a national policy, the OIG believes that such arrangements may potentially raise anti-kickback and self-referral issues.

• Non-compliance with the Federal, State and private payor supplier standards; [64]

• Providing false information on the Medicare DMEPOS supplier enrollment form; [65]

• Not providing corrected information on the DMEPOS supplier enrollment form in a timely manner; [66]

• Misrepresentation of a person's status as an agent or representative of Medicare; [67]

• Knowing misuse of supplier number, which results in improper billing; [68]

• Failing to meet individual payor requirements; [69]

• Performing tests on a beneficiary that a DMEPOS supplier is not authorized to perform; [70]

• Failing to refund overpayments to a health care program; [71]

• Failing to refund overpayments to patients; [72]

• Lack of communication between the DMEPOS supplier, the physician, and the patient; [73]

• Lack of communication between different departments within the DMEPOS supplier; [74] and

• Employing persons excluded from participation in Federal health care programs. [75]

A DMEPOS supplier's prior history of noncompliance with applicable statutes, regulations, and Federal, State or private health care program requirements may indicate additional types of risk areas where the DMEPOS supplier may be vulnerable and that may require necessary policy measures to be taken to prevent avoidable recurrence.[76] Additional risk areas should be assessed by DMEPOS suppliers and incorporated into the written policies and procedures and training elements developed as part of their compliance program.

3. *Claims Development and Submission*. a. *Medical Necessity*. A DMEPOS supplier's compliance program should ensure that services are billed only if they were ordered by the treating physician or other authorized person, have been provided, are covered, and are reasonable and necessary given the clinical condition of the patient.[77] DMEPOS suppliers must keep the treating physician's or other authorized person's original signed and dated order or CMN on file for all DMEPOS items and services.[78] Because the DMEPOS supplier is in a unique position to inform its clients who write orders and refer patients, the DMEPOS supplier may want to send a written notice to such clients concerning the necessary paperwork requirements.

As a preliminary matter, the OIG recognizes that physicians and other authorized persons must be able to order any items or services for the treatment of their patients. However, Medicare and other Government and private health care plans will only pay for those services otherwise covered that meet the appropriate medical necessity standards (e.g., ordered, provided, covered, reasonable, necessary, and criteria established by medical review policies). DMEPOS suppliers should not knowingly bill for services that do not meet the applicable medical necessity standards.[79] Upon a payor's request, the DMEPOS supplier must be able to provide documentation, such as original orders, proof of delivery, completed original certificates of medical necessity, written confirmation of verbal orders and any other documentation, to support the medical necessity of an item or service that the DMEPOS supplier has provided. [80]

Although DMEPOS suppliers do not and cannot treat patients or make medical necessity determinations, there are steps that a DMEPOS supplier can take to help maximize the likelihood that they only bill for services that are ordered, provided, covered, reasonable and necessary for each individual patient. The OIG recommends that DMEPOS supplier personnel understand the coverage and payment criteria of each payor they bill. To help aid supplier personnel, the DMEPOS supplier's compliance officer may want to create a clear, comprehensive summary of the ''medical necessity'' or coverage criteria and applicable rules of the various Government and private plans. This summary should be disseminated and explained to the appropriate DMEPOS supplier personnel.

We also recommend that DMEPOS suppliers formulate internal control mechanisms through their written policies and procedures. Such policies and procedures should include periodic claim reviews, both prior and subsequent to billing for items and services. Such a procedure will verify that patients are receiving and the DMEPOS supplier is billing for items and/or services that are ordered,

[64] See 42 CFR 424.57 for the Medicare supplier standards. DMEPOS suppliers may have the appropriate personnel acknowledge they have reviewed and will abide by these standards. In addition, DMEPOS suppliers should ensure they are meeting individual state and private payor supplier standards.

[65] Criminal penalties may be imposed against an individual who knowingly and willfully makes or causes to be made any false statements or representations of a material fact in any application for any benefit or payment under a Federal health care program. See 42 U.S.C. 1320a–7b(a)(1).

[66] By signing the DMEPOS supplier enrollment application, the DMEPOS supplier certifies it will notify the Medicare contractor of any changes in its enrollment information within 30 days of the effective date of the change.

[67] It is unlawful for a DMEPOS supplier to represent itself as a Medicare representative. See 42 U.S.C. 1320b–10.

[68] This practice may involve, but is not limited to, using another DMEPOS supplier's billing number.

[69] DMEPOS suppliers should be aware of the requirements of any payor they bill, especially in those situations where there is a primary and secondary payor.

[70] E.g., Medicare does not permit DMEPOS suppliers to perform oxygen tests (e.g., oximetry tests and arterial blood gas tests) to qualify patients for oxygen and oxygen supplies. See section 60–4 of the *Medicare Coverage Issues Manual*. See also discussion in section II.A.3.o.

[71] An overpayment is the amount of money the DMEPOS supplier has received in excess of the amount due and payable under a health care program. Examples of overpayments include, but are not limited to, instances where a DMEPOS supplier is: (1) paid twice for the same service, for the same beneficiary; or (2) paid for services that were provided but not ordered by the treating physician or other authorized person. DMEPOS suppliers should institute procedures to detect overpayments and to promptly remit such overpayments to the affected payor. See 42 U.S.C. 1320a–7b(a)(3), which provides criminal penalties for failure to disclose an overpayment.

[72] If the patient is also due money when a DMEPOS supplier identifies an overpayment to a health care program, the DMEPOS supplier should make a prompt refund to the patient. See 42 U.S.C. 1395m(j)(4) on limitation of patient liability for non-assigned claims that are denied due to medical necessity. See also 42 U.S.C. 1395pp(h) on limitation of patient liability for assigned claims that are denied due to medical necessity.

[73] A lack of communication between the DMEPOS supplier, physician, and patient may result in the DMEPOS supplier inappropriately billing for items or supplies (e.g., supplies for an on-going condition or rental equipment that are no longer medically necessary).

[74] A lack of communication between the different departments of the DMEPOS supplier may result in the DMEPOS supplier filing incorrect claims and/or equipment delivery problems.

[75] This involves hiring or contracting with individuals or entities who have been excluded from participation in Federal health care programs or any other Federal prucurement or non-prucurement program. See section II.E.2.

[76] ''Recurrence of misconduct similar to that which an organization has previously committed casts doubt on whether it took all reasonable steps to prevent such misconduct'' and is a significant factor in the assessment of whether a compliance program is effective. *See* United States Sentencing Commission Guidelines, *Guidelines Manual*, 8A1.2, Application Note 3(k)(iii).

[77] See note 29.

[78] See *Medicare Carriers Manual*, section 3312. See also *Medicare Carrier Manual*, section 4105.2 regarding what information must be included on the physician's order.

[79] See note 29.

[80] In order to ensure correct reimbursement, the payor may conduct a post-payment audit of the DMEPOS supplier's claims. Such audits may require that the DMEPOS supplier submit documentation that substantiates that the items or services were ordered by the treating physician or other authorized person, provided, covered, reasonable and necessary. See 42 CFR 424.5(a)(6).

provided, covered, reasonable and necessary. DMEPOS suppliers may choose to incorporate this claims review function into pre-existing quality assurance mechanisms.

b. *Physician Orders.* The DMEPOS supplier's written policies and procedures should state that the DMEPOS supplier will not bill for an item or service unless and until it has been ordered by the treating physician or any other authorized person. For all Medicare reimbursed DMEPOS items or services, the DMEPOS supplier must receive a written order from the patient's physician. When the DMEPOS supplier receives a verbal order, the supplier should document the verbal order and must have the treating physician confirm it in writing prior to billing.

The written policies and procedures should also state for items requiring a written order prior to delivery, that the order must be received by the DMEPOS supplier before it delivers the equipment to the patient and before it bills the payor.[81]

c. *Certificate of Medical Necessity.*[82] For some DMEPOS items and services, the DMEPOS supplier must receive a signed CMN from the treating physician or other authorized person. Currently, CMNs are required for Medicare reimbursement for fourteen items.[83] The original CMN must be retained in the DMEPOS supplier's file and be available to the DMERCs upon request.[84]

Each CMN has four sections: A, B, C, and D. Section A may be completed by the DMEPOS supplier. Section B may not be completed by the DMEPOS supplier.[85] Section B may only be completed by the treating physician, a non-physician clinician involved in the care of the patient or a physician employee who is knowledgeable about the patient's treatment. If section B was completed by a physician employee, the section must be reviewed by the treating physician or other person authorized to order such equipment for the patient to ensure accuracy. Section C must be completed by the DMEPOS supplier prior to the CMN being furnished to the treating physician or other authorized person for signature.[86] Section D is the attestation statement and may only be signed by the treating physician or other person authorized to order equipment for the patient.[87] The written policies and procedures on completing CMNs should reflect these standards.

DMEPOS suppliers should take all reasonable steps to ensure that each section of the CMN is completed in accordance with the above guidelines. The DMEPOS suppliers' written policies and procedures should require, at a minimum, that they:

- Do not forward blank CMNs to the treating physician or other authorized person for signature;
- Do not complete section B (Medical Necessity) of the CMN;
- Do not include diagnostic information on a cover letter (to the treating physician or other authorized person) attached to the CMN;[88]
- Do not alter or add any information on the CMN after receiving the completed and signed CMN from the physician or other authorized person;[89]
- Do not sign the CMN for the treating physician or other authorized person;
- Do not urge physicians or other authorized person to order equipment or supplies that exceed what is reasonable and necessary for the patient;
- Do not deliver an item that needs pre-authorization prior to receiving the physician order and CMN;[90]
- Do not submit a claim for items or services until the CMN is properly and correctly completed by the treating physician or other authorized person;
- Do maintain the original CMNs in their files;
- Do consult with the treating physician or other authorized person who signed the CMN when there is a question on the order;
- Do properly complete sections A and C of the CMN and forward the remainder of the CMN to the treating physician or other authorized person for his/her review, information, and signature; and
- Only bill for services that the treating physician or other authorized person attests in section D are ordered, covered, reasonable, and necessary for the patient.

d. *Billing.* DMEPOS suppliers should include in their written policies and procedures that they will only submit to Medicare or other Federal, State or private payor health care plans claims for equipment and supplies that are properly completed, accurate, and correctly identify the equipment or supplies ordered by the treating physician or other authorized person and furnished to the patient. Also, before submitting a claim, the DMEPOS supplier should ensure the item or service being claimed was provided, covered, reasonable and necessary.

The written policies and procedures should also clarify that a DMEPOS supplier cannot submit bills or receive payment for drugs used in conjunction with DMEPOS, unless the DMEPOS supplier is licensed to dispense the drug.[91]

e. *Selection of HCPCs Codes.* DMEPOS suppliers' written policies and procedures should state that only the HCPCs code that most accurately describes the item or service ordered and provided should be billed. The OIG views intentional ''upcoding'' (i.e., the selection of a code to maximize reimbursement when such a code is not the most appropriate descriptor of the service) as raising, among other things, false claims issues under the Federal False Claims Act.[92] To ensure code accuracy, the OIG recommends the DMEPOS supplier include a requirement in its policies and procedures that the codes be reviewed (random sample or certain codes) by individuals with technical expertise in coding before claims containing such codes are submitted to the affected payor. If a DMEPOS supplier has questions regarding the appropriate

[81] See 42 CFR 410.38.

[82] As defined in 42 U.S.C. 1395m(j)(2)(B). See also OIG Special Fraud Alert regarding Physician Liability for Certifications in the Provision of Medical Equipment and Supplies and Home Health Services, 64 FR 1813 (January 12, 1999). Special Fraud Alerts are also available on the Internet.

[83] Items or services requiring CMNs are as follows: Home oxygen therapy (HCFA form 484); Hospital beds (HCFA form 841); Support surfaces (HCFA form 842); Motorized wheelchairs (HCFA form 843) (Section C continuation, HCFA form 854); Manual wheelchairs (HCFA form 844) (Section C continuation, HCFA form 854); Continuous positive airway pressure (CPAP) devices (HCFA form 845); Lymphedema pumps (pneumatic compression devices) (HCFA form 846); Osteogenesis stimulators (HCFA form 847); Transcutaneous electrical nerve stimulators (TENS) (HCFA form 848); Seat lift mechanisms (HCFA form 849); Power operated vehicles (HCFA form 850); Infusion pumps (HCFA form 851); Parenteral nutrition (HCFA form 852); and Enteral nutrition (HCFA form 853).

[84] See *Medicare Carrier Manual*, section 3312.

[85] A supplier who knowingly and willfully completes section B of the form is, at a minimum, subject to a civil money penalty up to $1,000 for each form or document completed in such manner. See 42 U.S.C. 1395m(j)(2). That supplier may also face civil or criminal liability.

[86] A supplier who knowingly and willfully fails to include, in section C, the fee schedule amount and the supplier's charge for the equipment or supplies being furnished may be subject to a civil money penalty up to $1,000 for each form or document so distributed. See 42 U.S.C. 1395m(j)(2).

[87] Physicians or other authorized persons should only sign CMNs in which sections A–C are completed and correct. Signature and date stamps are not acceptable. See *Medicare Carriers Manual*, section 3312.

[88] See discussion in section A.II.3.m.

[89] There have been many investigations centering on DMEPOS suppliers who alter information in order to affect their reimbursement (e.g., altering diagnosis code, altering HCPCs code of service provided).

[90] See 42 U.S.C. 1395m(a)(11)(B). See also 42 CFR 410.38.

[91] See Medicare program memoranda B–98–6 and B–98–18.

[92] See 31 U.S.C. 3729, which provides for the imposition of penalties of $5,000 to $10,000 per false claim, plus up to three times the amount of damages suffered by the Federal Government because of the false claim.

code to be used, it should contact the Statistical Analysis Durable Medical Equipment Carrier's (SADMERC) HCPCS coding help line.[93]

f. *Valid Supplier Numbers*. The DMEPOS supplier should ensure that appropriate personnel are knowledgeable in (1) completing the HCFA 855S supplier application;[94] and (2) complying with the Federal requirements of 42 CFR 424.57(e) for updating supplier number applications.

The written policies and procedures should state that the DMEPOS supplier should not bill any other Federal, State or private payor health care plan without obtaining the necessary billing numbers and that the billing numbers will be used correctly.[95]

Prior to applying for a valid supplier number, DMEPOS suppliers providing services to Medicare beneficiaries must meet the supplier standards.[96] DMEPOS suppliers should take all affirmative steps to ensure that no claims for Medicare reimbursement are submitted prior to the DMEPOS supplier being issued a valid supplier number by the National Supplier Clearinghouse. A DMEPOS supplier should not have more than one supplier number unless it is appropriate to identify subsidiary or regional entities under the supplier's ownership or control.[97]

g. *Mail Order Suppliers*. We recommend that any DMEPOS supplier who engages in the mail order supply business clearly articulate its protocol for this segment of its business in the company's written policies and procedures.

Mail order supplies should only be delivered in accordance with the treating physician's or other authorized person's order. Regularly shipping supplies without such orders may lead to providing supplies substantially in excess of the patient's needs.[98] We also recommend that the supplier utilize a tracking system so it will be able to determine whether or not the patient received the supplies and will be able to track the location of an item or supply at any given time. In addition, the mail order DMEPOS supplier should maintain an accurate inventory list and should not bill for or commit to sending items that are not part of its inventory.

h. Assignment. If a DMEPOS supplier accepts Medicare assignment, its written policies and procedures should state that it will not charge Medicare beneficiaries more than the amounts allowed under the Medicare fee schedule, including coinsurance and deductibles. If the beneficiary pays the DMEPOS supplier prior to the DMEPOS supplier submitting the claim, the DMEPOS supplier should ensure it is not charging the beneficiary more than the coinsurance on the allowed amount under the fee schedule. In the event that the DMEPOS supplier collects excess payments from a Medicare beneficiary, it should have mechanisms in place to promptly refund the overpayment to the beneficiary. DMEPOS suppliers should be knowledgeable about the Medicare rules and instructions for accepting assignment and receiving direct payment from beneficiaries for items or services.

If a DMEPOS supplier chooses not to accept Medicare assignment, it is still responsible for submitting the claim to Medicare on behalf of the beneficiary.[99]

If the DMEPOS supplier chooses to utilize a billing agent, the DMEPOS supplier should ensure it is complying with all of the relevant statutes and requirements governing such an arrangement.[100] The OIG strongly recommends that the supplier coordinate closely with the billing company to establish compliance responsibilities. Once the responsibilities have been clearly delineated, they should be formalized in the written contract between the DMEPOS supplier and the billing agent. The OIG recommends that the contract enumerate those functions that are shared responsibilities and those that are the sole responsibility of either the billing agent or the DMEPOS supplier.

i. Liability Issues. A DMEPOS supplier or Medicare beneficiary is not liable for payment on assigned claims where the beneficiary did not know, and could not reasonably have been expected to know, that the payment for such services would not be made.[101] However, when the DMEPOS supplier knew, or could have been expected to know, the items or services would be denied, the liability for the charges for the denied items or services rest with the DMEPOS supplier.[102]

When a DMEPOS supplier knows or has reason to believe that the equipment or supplies ordered by the treating physician or other authorized person will be denied, the DMEPOS supplier should inform the patient prior to furnishing the item or service and ask the patient to sign a written notice.[103] If the DMEPOS supplier has not received a signed written notice from the beneficiary and the claim is denied, the DMEPOS supplier should not bill the beneficiary. The written notice must be in writing, must clearly identify the particular item or service, must state that the payment for the particular service likely will be denied, and must give the reason(s) for the belief that payment is likely to be denied. It is the beneficiary's decision whether or not to sign the written notice. If the beneficiary does sign the notice, the supplier should: (1) include the appropriate modifier on the claim form; (2) maintain the written notice in its files; and (3) be able to produce the written notice to the DMERC, upon request.

Routine notices to beneficiaries that do no more than state that denial of payment is possible or that they never know whether payment will be denied are not considered acceptable evidence of written notice. Notices should not be given to beneficiaries unless there is some genuine doubt regarding the likelihood of payment as evidenced by the reasons stated on the written notice. Giving notice for all claims, items or services is not an acceptable practice.

The DMEPOS supplier should include liability issues (e.g., circumstances where the DMEPOS supplier knows or could be expected to know of a denial, use of advance beneficiary notice, etc.) in their written policies and procedures.

j. Routine Waiver of Deductibles and Coinsurance. Routine waivers of deductibles and coinsurance may result in false claims, violations of the anti-kickback statute and overutilization of items or services.[104] DMEPOS suppliers are permitted to waive the Medicare coinsurance amounts for cases of

[93] The phone number for the SADMERC's HCPCS coding help line is: (803) 736–6809. The hours of operation are Monday through Friday from 9:00 am to 4:00 pm, EST. The SADMERC will aid the DMEPOS supplier in choosing the most accurate code for the item or service ordered and supplied. However, DMEPOS suppliers should be aware that assigning a HCPCs code to an item or service does not necessarily guarantee reimbursement.

[94] By signing the certification statement of the enrollment application, the applicant agrees that he/she has read, understood, meets and will continue to meet the supplier standards and will be disenrolled from the program if any standards are not met or violated.

[95] E.g., if a DMEPOS supplier has more than one location, the supplier number of the location that filled the physician's order will be used on the claim form.

[96] See 42 CFR 424.57.

[97] See 42 U.S.C. 1395m(j)(1)(D).

[98] Providing a substantially excessive amount of supplies may, for example, constitute grounds for a supplier's exclusion under 42 U.S.C. 1320a–7(b)(6)(B).

[99] See 42 U.S.C. 1395w–4(g)(4).

[100] See 42 U.S.C. 1395u(b)(6); 42 CFR 424.73; *Medicare Carrier Manual*, section 3060. See also OIG Ad. Op. 98–1 (1998) and OIG Ad. Op. 98–4 (1998).

[101] See 42 U.S.C. 1395pp.

[102] Id.

[103] See *Medicare Carriers Manual*, section 7300.5.

[104] See 59 FR 31157 (December 19, 1994) or the OIG web site at http://www.dhhs.gov/progorg/oig for the OIG Special Fraud Alert on Medicare Deductibles and Copayments.

indigency.[105] However, we recommend the supplier develop and maintain written criteria documenting its policy for determining indigency, and consistently apply these criteria to all cases. This indigency exception must not be used routinely and a good faith effort must be made to collect deductibles and coinsurance.

DMEPOS suppliers' written policies and procedures should state that they will not routinely waive deductibles and coinsurance for Medicare beneficiaries. Such policies and procedures should include, but not be limited to, statements that DMEPOS supplier personnel are prohibited from: advertising an intent to waive deductibles or coinsurance; advertising an intent to discount services for Medicare beneficiaries; giving unsolicited advice to patients that they need not pay; charging Medicare beneficiaries more than other patients for similar services and items; or collecting deductibles and coinsurance only when a patient has a certain insurance. Routine waivers of deductibles and coinsurance may result in civil monetary penalties, False Claims Act liability, and/or a violation of the anti-kickback statute.[106]

K. Capped Rentals. DMEPOS suppliers' written policies and procedures should address Government and private payor requirements when providing rental equipment to beneficiaries (e.g., the purchase option [107] and servicing and maintenance [108]). DMEPOS suppliers must offer a purchase option to beneficiaries during the 10th continuous rental month.[109] The DMEPOS supplier should clearly, accurately, and non-deceptively discuss the pros and cons of the different options with the beneficiary. If the beneficiary does not accept the purchase option, the DMEPOS supplier must continue to provide the item without charge to the beneficiary or Medicare after the 15th continuous month of receiving rental payments from Medicare, providing the item or service continues to be medically necessary.

However, the DMEPOS supplier may submit additional claims for the maintenance and servicing fees associated with the rental item.[110] The DMEPOS supplier should ensure it is performing basic safety and operational function checks after use by each patient, and is performing routine and preventative maintenance on equipment. The DMEPOS supplier must ensure it has qualified staff or contractors to service, set up, and instruct the patient on the proper use of the equipment. The DMEPOS supplier should ensure it maintains current service manuals for all equipment they supply. In addition, the policies and procedures should also establish an internal control system which allowed the DMEPOS suppler to track the location of each piece of equipment at any given time.

The policies and procedures should also address the guidelines for determining continuous use and criteria for a new rental period.[111] If a beneficiary dies during a rental period, the DMEPOS supplier may receive the entire monthly rental payment.[112] However, if the DMEPOS supplier continues to bill for the item because it did not receive notice of the beneficiary's death until the following month, any payments received for rental items the month after the beneficiary dies are considered an overpayment and must promptly be refunded. The DMEPOS supplier should create internal mechanisms to ensure the correct rental month appears on the claim and the correct modifier is used.

In addition, the DMEPOS supplier should ensure it is not submitting claims for rental equipment when the beneficiary is residing in an institution. The OIG is aware that some DMEPOS suppliers deliver equipment to beneficiaries residing in institutions just prior to the beneficiary being discharged. However, if the beneficiary is residing in an institution when the DMEPOS supplier delivers the equipment, the HCFA claim form should indicate the date of delivery as being the date the beneficiary is discharged from the institution. The DMEPOS supplier may not submit the claim prior to the beneficiary's date of discharge.

l. ZX Modifier. The ZX modifier is used to indicate that the DMEPOS supplier is maintaining medical necessity documentation in its files. Such documentation only needs to be submitted to the DMERC upon request.

DMEPOS suppliers should create internal mechanisms to ensure the proper use of the ZX modifier. Improper use of the modifier may result in the submission of false claims. The written policies and procedures should address the DMEPOS supplier's protocol for using the ZX modifier.[113]

m. Cover Letters. The DMEPOS supplier should address the use of cover letters in its written policies and procedures, if applicable.[114]

In many instances, the DMEPOS supplier will send a cover letter along with the CMN to the physician. The information contained in the cover letter should address issues relating to HCFA or DMERC regulation/policy changes, brief descriptions of the item(s) being provided and changes in the patient's regimen. The cover letter must not (i) lead physicians to order medically unnecessary items or supplies or (ii) include diagnostic information. In addition, the DMEPOS supplier should not distribute completed ''sample'' CMNs to physicians. DMEPOS suppliers should maintain on file a copy of the cover letter sent to physicians. The DMERCs may request to review the information provided in cover letters to ensure the DMEPOS supplier is in compliance with the law.

n. Communication. The OIG suggests DMEPOS suppliers create mechanisms that increase the communication between treating physicians or other authorized persons who refer business to the DMEPOS supplier, the patients, and the DMEPOS supplier. Such mechanisms should be included in the DMEPOS supplier's written policies and procedures and may include the DMEPOS supplier periodically calling the patient to ensure the equipment is still being used and operating properly or an arrangement between the DMEPOS supplier and the physician whereby the physician immediately informs the DMEPOS supplier when equipment is no longer medically necessary. The DMEPOS supplier should create mechanisms to ensure communications between different departments (e.g., sales and billing) in order to prevent the filing of incorrect claims.

o. Oxygen and Oxygen Equipment. The OIG recommends the written policies and procedures for DMEPOS suppliers furnishing oxygen state that the DMEPOS supplier will ensure that initial claims for oxygen therapy include the written results of an arterial blood gas study or oximetry test (on the CMN) that has been ordered and evaluated by the patient's treating physician. Further, the written policies

[105] See section 5520 of the *Medicare Carriers Manual.*

[106] See 42 U.S.C. 1320a–7a(a)(5); 31 U.S.C. 3729–3733; 42 U.S.C. 1320a–7b.

[107] See 42 CFR 414.229(d).

[108] See 42 CFR 414.229(e).

[109] DMEPOS suppliers must offer beneficiaries the option of purchasing power-driven wheelchairs at the time the DMEOS supplier first furnishes the item. See 42 CFR 414.229(d)(1).

[110] See 42 CFR 414.229(e).

[111] See 42 CFR 414.230.

[112] See *Medicare Carriers Manual,* section 4105.3.

[113] See relevant DMERC supplier manual(s) for guidelines on proper use.

[114] Id.

and procedures should provide for the DMEPOS supplier to maintain such test results and any other independent physiological laboratory (IPL) documents supporting the patient's medical necessity for the oxygen. The DMEPOS supplier should have the IPLs from which they receive tests results submit all raw test results to the ordering physician for the physician's benefit, and not just a summary of the results. The written policies and procedures should provide that a DMEPOS supplier is not qualified to conduct the blood gas study or to prescribe the oxygen therapy.[115] When submitting an oxygen or oxygen equipment claim for reimbursement, the DMEPOS supplier must ensure it is complying with the payment rules.[116]

4. Anti-Kickback and Self-Referral Concerns. The DMEPOS supplier should have policies and procedures in place with respect to compliance with Federal and State laws, including the anti-kickback statute, as well as the Stark physician self-referral law.[117] Such policies should provide that:

- All of the DMEPOS supplier's contracts and arrangements with actual or potential referral sources (e.g., physicians) are reviewed by counsel and comply with all applicable statutes and regulations, including the anti-kickback statute and the Stark physician self-referral law provisions; [118]
- The DMEPOS supplier not submit or cause to be submitted to the Federal health care programs claims for patients who were referred to the DMEPOS supplier in accordance with contracts or financial arrangements that were designed to induce such referrals in violation of the anti-kickback statute or similar Federal or State statute or regulation or that otherwise violates the Stark physician self-referral law; and
- The DMEPOS supplier does not offer or provide gifts, free services, or other incentives or things of value to patients, relatives of patients, physicians, home health agencies, nursing homes, hospitals, contractors, assisted living facilities, or other potential referral sources for the purpose of inducing referrals in violation of the anti-kickback statute or similar Federal or State statute or regulation.[119]

Further, the written policies and procedures should specifically reference and take into account the OIG's safe harbor regulations, which describe those payment practices that are immune from criminal and administrative prosecution under the anti-kickback statute.[120]

5. Marketing. DMEPOS supplier compliance programs should require honest, straightforward, fully informative and non-deceptive marketing, where marketing is permitted. It is in the best interest of patients, DMEPOS suppliers, physicians and health care programs that physicians or other persons authorized to order DMEPOS fully understand the services offered by the DMEPOS supplier, the items or services that will be provided when ordered and the financial consequences for Medicare as well as other payors for items or services ordered. If the DMEPOS supplier services a large number of non-English speaking patients, it should ensure its marketing materials are available in that other language. The DMEPOS supplier's written policies and procedures should ensure that its marketing information is clear, correct, and fully informative. Salespeople must not offer physicians, patients or other potential referral sources incentives, in cash or in kind, for their business.[121] Similarly, they must not engage in any marketing activity that either explicitly or implicitly implies that Medicare beneficiaries are not obligated to pay their coinsurance or can receive ''free'' services.[122] In addition, DMEPOS suppliers must not promote items or services to patients or physicians that are not reasonable or necessary for the treatment of the individual patient. The OIG suggests the DMEPOS supplier's written policies and procedures create internal mechanisms to avoid these situations.

With respect to marketing and sales, the OIG has a longstanding concern that percentage compensation arrangements for sales and marketing personnel may increase the risk of such persons violating the anti-kickback statute.[123] The OIG recommends the DMEPOS supplier monitor its sales representatives on a regular basis (e.g., rotate sales staff or send sales manager on some sales calls).

DMEPOS suppliers are prohibited from making unsolicited telephone contacts to Medicare beneficiaries.[124] In addition, a DMEPOS supplier cannot accomplish through an agent that which it cannot do itself. Since a DMEPOS supplier has no control over the means by which a non-employee sales or other representative might contact a Medicare beneficiary regarding the furnishing of such items, DMEPOS suppliers may not accept any referral from a sales or other representative who is not an employee of the DMEPOS supplier, regardless of the means allegedly used to contact the beneficiary. We suggest the DMEPOS supplier's written policies and procedures reflect this prohibition.

DMEPOS suppliers are prohibited from using symbols, emblems, or names in reference to Social Security or Medicare in a manner that such person knows or should know would convey the false impression that such item is approved, endorsed, or authorized by the Social Security Administration, the Health Care Financing Administration, or the Department of Health and Human Services or that such person has some connection with, or authorization from, any of these agencies.[125]

6. Retention of Records. DMEPOS supplier compliance programs should provide for the implementation of a records system. DMEPOS suppliers should ensure that records are maintained for the length of time required by Federal and State law and private payors, or by the supplier's record retention policies, whichever is longer. This system should establish policies and procedures regarding the creation, distribution, retention, storage, retrieval, and destruction of documents.[126] The three types of documents developed under this system should include: (1) all records and documentation (e.g., billing and claims documentation) required either by Federal or State law and the program requirements of Federal, State and private health plans; (2) records listing the persons responsible for implementing each part of the

[115] See *Coverage Issues Manual*, section 60–4.

[116] See 42 CFR 414.226.

[117] Towards this end, the DMEPOS supplier should, among other things, obtain copies of all relevant OIG regulations, Special Fraud Alerts, and advisory opinions (these documents are located on the Internet at http://www.dhhs.gov/progorg/oig), and ensure that the DMEPOS supplier's policies reflect the guidance provided by the OIG. See 42 U.S.C. 1395nn(a) for the Stark physician referral laws. See also 42 U.S.C. 1320a–7b for prohibited activities under the anti-kickback statute.

[118] If the DMEPOS supplier questions an arrangement it may enter into, it should consider asking the OIG for an advisory opinion regarding the anti-kickback statute or HCFA for an advisory opinion regarding Stark. See 62 FR 7350 (February 19, 1997) and 63 FR 38311 (July 16, 1998) for instructions on how to submit an Advisory Opinion to the OIG. These instructions are also located on the Internet at: http://www.dhhs.gov/progorg/oig. See 63 FR 1645 (January 9, 1998) on how to submit an advisory opinion to HCFA.

[119] See 42 U.S.C. 1320a–7(a)(5), which provides for civil money penalties for improper inducements to beneficiaries. See also 42 U.S.C. 1320a–7b(b).

[120] See 42 CFR 1001.952.

[121] See anti-kickback statute discussion in section II.A.4.

[122] See discussion in section II.A.3.j.

[123] See, e.g., 42 U.S.C. 1320a–7b(b); OIG Ad. Op. 98–10 (1998); section II.A.4.

[124] See 42 U.S.C. 1395m(a)(17), Pub. L. 103–432, section 132(a).

[125] See 42 U.S.C. 1320b–10.

[126] This records system should be tailored to fit the individual needs and financial resources of the DMEPOS supplier.

compliance program; and (3) all records necessary to protect the integrity of the DMEPOS supplier's compliance process and confirm the effectiveness of the program. The documentation necessary to satisfy the third requirement includes, but is not limited to: evidence of adequate employee training; reports from the DMEPOS supplier's hotline; results of any investigation conducted as a consequence of a hotline call; modifications to the compliance program; self-disclosure; all written notifications to providers;[127] and the results of the DMEPOS supplier's auditing and monitoring efforts.[128]

7. Compliance as an Element of a Performance Plan. Compliance programs should require that the promotion of, and adherence to, the elements of the compliance program be a factor in evaluating the performance of all employees. Employees should be periodically trained in new compliance policies and procedures. In addition, all managers and supervisors involved in the claims development and submission processes should:

- Discuss with all supervised employees and relevant contractors the compliance policies and legal requirements applicable to their function;
- Inform all supervised personnel that strict compliance with these policies and requirements is a condition of employment; and
- Disclose to all supervised personnel that the DMEPOS supplier will take disciplinary action up to and including termination for violation of these policies or requirements.

In addition to making performance of these duties an element in evaluations, the compliance officer or DMEPOS supplier management should include a policy that managers and supervisors will be sanctioned for failing to adequately instruct their subordinates or for failing to detect noncompliance with applicable policies and legal requirements, where reasonable diligence on the part of the manager or supervisor would have led to the discovery of any problems or violations.

B. Designation of a Compliance Officer and a Compliance Committee

1. Compliance Officer. Every DMEPOS supplier should designate a compliance officer to serve as the focal point for compliance activities. The compliance officer should be a person of high integrity. This responsibility may be the individual's sole duty or added to other management responsibilities, depending upon the size and resources of the DMEPOS supplier and the complexity of the task. When a compliance officer has other duties, the other duties should not be in conflict with the compliance goals.[129]

Designating a compliance officer with the appropriate authority is critical to the success of the program, necessitating the appointment of a high-level official in the DMEPOS supplier with direct access to the DMEPOS supplier's owner(s), president or CEO, governing body, all other senior management, and legal counsel.[130] The compliance officer should be highly enough placed in the company so that he or she can exercise independent judgment without fear of reprisal, and so that employees will know that bringing a problem to that person's attention is not a wasted exercise. The compliance officer should have sufficient funding and staff to fully perform his or her responsibilities. Coordination and communication are the key functions of the compliance officer with regard to planning, implementing, and monitoring the compliance program.

The compliance officer's primary responsibilities should include:

- Overseeing and monitoring the implementation of the compliance program;[131]
- Reporting on a regular basis to the DMEPOS supplier's owner(s), governing body, CEO, president, and compliance committee (if applicable) on the progress of implementation, and assisting these components in establishing methods to improve the DMEPOS supplier's efficiency and quality of services, and to reduce the DMEPOS supplier's vulnerability to fraud, abuse and waste;
- Periodically revising the program in light of changes in the organization's needs, and in the statutes, rules, regulations, and requirements of Federal, State and private payor health care plans;
- Reviewing employees' certifications that they have received, read, and understood the standards of conduct;
- Developing, coordinating, and participating in a multifaceted educational and training program that focuses on the elements of the compliance program, and seeks to ensure that all appropriate employees and management are knowledgeable of, and comply with, pertinent Federal, State and private payor health care program requirements;
- Ensuring independent contractors and agents who provide services (e.g., billing companies, delivery services and sources of referrals) to the DMEPOS supplier are aware of the requirements of the DMEPOS supplier's compliance program with respect to coverage, billing, and marketing, among other things;
- Coordinating personnel issues with the DMEPOS supplier's Human Resources/Personnel office (or its equivalent) to ensure that the National Practitioner Data Bank,[132] Cumulative Sanction Report,[133] and the General Services Administration's List of Parties Excluded from Federal Procurement and Nonprocurement Programs [134] have been checked with respect to all employees, referring physicians or other authorized persons, and independent contractors (as appropriate);[135]
- Assisting the DMEPOS supplier's financial management in coordinating internal compliance review and monitoring activities, including annual or periodic reviews of departments;
- Independently investigating and acting on matters related to compliance,

[127] This should include notifications regarding inappropriate claims and overpayments.

[128] The creation and retention of such documents and reports may raise a variety of legal issues, such as patient privacy and confidentiality. These issues are best discussed with legal counsel.

[129] E.g., companies should not choose a sales manager who may be pressured to achieve high sales, which might result in a conflict with compliance goals.

[130] The OIG believes that it is not advisable for the compliance function to be subordinate to the DMEPOS supplier's general counsel, comptroller or similar DMEPOS supplier financial officer. Free standing compliance functions help to ensure independent and objective legal reviews and financial analyses of the institution's compliance efforts and activities. By separating the compliance function from the key management positions of general counsel or chief financial officer (where the size and structure of the DMEPOS supplier make this a feasible option), a system of checks and balances is established to more effectively achieve the goals of the compliance program.

[131] For DMEPOS supplier chains, the OIG encourages coordination with each DMEPOS supplier location through the use of a headquarter's compliance officer, communicating with parallel positions in each facility or regional office, as appropriate.

[132] The National Practitioner Data Bank, maintained by the Public Health Service, is a data base that contains information about medical malpractice payments, sanctions by boards of medical examiners or state licensing boards, adverse clinical privilege actions, and adverse professional society membership actions. Health care entities can have access to this data base to seek information about their own medical or clinical staff, as well as prospective employees.

[133] The Cumulative Sanction Report is an OIG-produced report available on the Internet at http://www.dhhs.gov/progorg/oig. It is updated on a regular basis to reflect the status of individuals and entities who have been excluded from participation in the Medicare and Medicaid programs.

[134] The List of Parties from Federal Procurement and Nonprocurement programs is a GSA-produced report available on the Internet at: http://www.arnet.gov/epls.

[135] Depending upon State requirements or DMEPOS supplier policy, the Compliance Officer may also conduct a criminal background check of employees.

including the flexibility to design and coordinate internal investigations (e.g., responding to reports of problems or suspected violations) and any resulting corrective action (e.g., making necessary improvements to DMEPOS supplier policies and practices, taking appropriate disciplinary action, etc.) with all DMEPOS supplier departments, independent contractors, and health care professionals;

- Developing policies and programs that encourage managers and employees to report suspected fraud and other improprieties without fear of retaliation; and
- Continuing the momentum of the compliance program and the accomplishment of its objectives long after the initial years of implementation.[136]

The compliance officer must have the authority to review all documents and other information that are relevant to compliance activities, including, but not limited to, patient records (where appropriate), billing records, and DMEPOS supplier records concerning the marketing efforts of the DMEPOS supplier and the DMEPOS supplier's arrangements with other parties, including employees, home health agencies, skilled nursing facilities, and ordering physicians or other authorized persons. This policy enables the compliance officer to review contracts and obligations (seeking the advice of legal counsel, where appropriate) that may contain referral and payment provisions that could violate the anti-kickback statute, as well as the Stark physician self-referral prohibition or other statutory or regulatory requirements.

In addition, the compliance officer should be copied on the results of all internal audit reports and work closely with key managers to identify aberrant trends in the coding and billing areas. The compliance officer should ascertain patterns that require a change in policy and forward these issues to the compliance committee to remedy the problem. The compliance officer should have full authority to stop the processing of claims that he or she believes are problematic until such time as the issue in question has been resolved.

2. Compliance Committee. The OIG recommends, where feasible,[137] that a compliance committee be established to advise the compliance officer and assist in the implementation of the compliance program.[138] When assembling a team of people to serve as the DMEPOS supplier's compliance committee, the DMEPOS supplier should include individuals with a variety of skills.[139] The OIG strongly recommends that the compliance officer manage the compliance committee. Once a DMEPOS supplier chooses the people that will accept the responsibilities vested in members of the compliance committee, the DMEPOS supplier must train these individuals on the policies and procedures of the compliance program, as well as how to discharge their duties.

The committee's responsibilities should include:

- Analyzing the organization's regulatory environment, the legal requirements with which it must comply,[140] and specific risk areas;
- Assessing existing policies and procedures that address these risk areas for possible incorporation into the compliance program;
- Working with appropriate DMEPOS supplier departments to develop standards of conduct and policies and procedures that promote allegiance to the DMEPOS supplier's compliance program;
- Recommending and monitoring, in conjunction with the relevant departments, the development of internal systems and controls to carry out the organization's standards, policies, and procedures as part of its daily operations;[141]
- Determining the appropriate strategy/approach to promote compliance with the program and detection of any potential violations, such as through hotlines and other fraud reporting mechanisms;
- Developing a system to solicit, evaluate, and respond to complaints and problems; and
- Monitoring internal and external audits and investigations for the purpose of identifying troublesome issues and deficient areas experienced by the DMEPOS supplier, and implementing corrective and preventive action.

The committee may also address other functions as the compliance concept becomes part of the overall DMEPOS supplier's operating structure and daily routine.

C. Conducting Effective Training and Education

1. Initial Training in Compliance. The proper education and training of corporate officers, managers, employees and the continual retraining of current personnel at all levels, are significant elements of an effective compliance program. In order to ensure the appropriate information is being disseminated to the correct individuals, the training should be separated into sessions. All employees should attend the general session on compliance, employees whose job primarily focuses on submission of claims for reimbursement should receive additional training on this subject, and employees who are involved in sales and marketing should receive additional training on this subject.

a. General Sessions. As part of their compliance programs, DMEPOS suppliers should require all affected personnel to attend training on an annual basis, including appropriate training in Federal and State statutes, regulations and guidelines, the policies of private payors, and training in corporate ethics. The general training sessions should emphasize the DMEPOS

[136] Periodic on-site visits of DMEPOS supplier operations, bulletins with compliance updates and reminders, distribution of audiotapes or videotapes on different risk areas, lectures at management and employee meetings, circulation of recent health care articles covering fraud and abuse, and innovative changes to compliance training are various examples of approaches and techniques the compliance officer can employ for the purpose of ensuring continued interest in the compliance program and the DMEPOS supplier's commitment to its policies and principles.

[137] The OIG recognizes that smaller DMEPOS suppliers may not be able to establish a compliance committee. In those situations, the compliance officer should fulfill the responsibility of the compliance committee.

[138] The compliance committee benefits from having the perspectives of individuals with varying responsibilities in the organization, such as operations, billing, coding, marketing, and human resources, as well as employees and managers of key operating units. These individuals should have the requisite seniority and comprehensive experience within their respective departments to implement any necessary changes to the DMEPOS supplier's policies and procedures as recommended by the committee. A compliance committee for a DMEPOS supplier that is part of another organization (e.g., home health agency) might benefit from the participation of officials from other departments in the organization, such as the accounting and billing departments.

[139] A DMEPOS supplier should expect its compliance committee members and compliance officer to demonstrate high integrity, good judgment, assertiveness, and an approachable demeanor, while eliciting the respect and trust of employees of the DMEPOS supplier. The DMEPOS supplier's compliance committee members should also have significant professional experience working with billing, documentation, and auditing principles.

[140] This includes, but is not limited to, the civil False Claims Act, 31 U.S.C. 3729–3733; the criminal false claims statutes, 18 U.S.C. 287, 1001; the fraud and abuse provisions of the Balanced Budget Act of 1997, Pub. L. 105–33; the Health Insurance Portability and Accountability Act of 1996, Pub. L. 104–191; and compliance with the Medicare supplier standards, 42 CFR 424.57.

[141] With respect to national DMEPOS supplier chains, this may include fostering coordination and communication between those employees responsible for compliance at headquarters and those responsible for compliance at the individual supplier branches.

supplier's commitment to compliance with these legal requirements and policies.

These training programs should include sessions highlighting the DMEPOS supplier's compliance program, summarizing fraud and abuse laws and regulations, Federal, State and private payor health care program requirements, claim submission procedures and marketing practices that reflect current legal and program standards. The DMEPOS supplier must take steps to communicate effectively its standards and procedures to all affected employees, physicians, independent contractors and other significant agents, e.g., by requiring participation in training programs and disseminating publications that explain specific requirements in a practical manner.[142] Managers of specific departments can assist in identifying areas that require training and in carrying out such training.[143] Training instructors may come from outside or inside the organization. New employees should be targeted for training early in their employment.[144]

As part of the initial training, the standards of conduct should be distributed to all employees.[145] At the end of this training session, every employee, as well as physicians, independent contractors, and other significant agents, should be required to sign and date a statement that reflects their knowledge of and commitment to the standards of conduct. This attestation should be retained in the employee's personnel file. For physicians, independent contractors, and other significant agents, the attestation should become part of the contract and remain in the file that contains such documentation.

Further, to assist in ensuring that employees continuously meet the expected high standards of conduct, any employee handbook delineating or expanding upon these standards should be regularly updated as applicable statutes, regulations and Federal health care program requirements are modified.[146] DMEPOS suppliers should provide an additional attestation in the modified standards that stipulates the employee's knowledge of and commitment to the modifications.

b. Claim Development and Billing Training. In addition to specific training in the risk areas identified in section II.A.2, above, primary training to appropriate corporate officers, managers and other claim development and billing staff should include such topics as:

- Specific Government and private payor reimbursement principles;[147]
- Providing DMEPOS items or services without proper authorization;
- Proper documentation of services rendered, including the correct application of official ICD–9 and HCPCs coding rules and guidelines;
- Improper alterations to documentation (e.g., patient records, CMNs);
- Compliance with the Federal, State and privator payor supplier standards;
- Signing a form for a physician without the physician's authorization; and
- Duty to report misconduct.
- Clarifying and emphasizing these areas of concern through training and educational programs are particularly relevant to a DMEPOS supplier's billing and coding personnel, in that the pressure to meet business goals may render employees vulnerable to engaging in prohibited practices.

c. *Sales and Marketing Training.* In addition to specific training in the risk areas identified in section II.A.2, above, primary training to sales and marketing personnel should include such topics as:

- General prohibition on paying or receiving renumeration to induce referrals;
- Routine waiver of deductibles and/or coinsurance;
- Disguising referral fees as salaries;
- Offering free items or services to induce referrals;
- High pressure marketing of non-covered or unnecessary services;
- Improper patient solicitation; and
- Duty to report misconduct.

Clarifying and emphasizing these areas of concern through training and educational programs are particularly relevant to a DMEPOS supplier's sales and marketing personnel, in that the pressure to meet business goals may render employees vulnerable to engaging in prohibited practices.

2. Format of the Training Program. The OIG suggests that all relevant levels of personnel be made part of various educational and training programs of the DMEPOS supplier.[148] Employees should be required to have a minimum number of educational hours per year, as appropriate, as part of their employment responsibilities.[149] For example, as discussed above, employees involved in billing functions should be required to attend periodic training in applicable reimbursement coverage and documentation of records.[150]

A variety of teaching methods, such as interactive training and training in several different languages, particularly where a DMEPOS supplier has a culturally diverse staff, should be implemented so that all affected employees are knowledgeable about the DMEPOS supplier's standards of conduct and procedures for alerting senior management to problems and concerns.[151] Targeted training should be provided to corporate officers, managers and other employees whose actions affect the accuracy of the claims submitted to the Government, such as employees involved in the coding, billing, sales, and marketing processes. All training materials should be designed to take into account the skills, knowledge and experience of the individual trainees. Given the complexity and interdependent relationships of many departments, it is

[142] Publications such as Special Fraud Alerts, audit and inspection reports, and advisory opinions, as well as the annual OIG work plan, are readily available from the OIG and could be the basis for standards, educational courses and programs.

[143] Significant variations in functions and responsibilities of different departments may create the need for training materials that are tailored to the compliance concerns associated with particular operations and duties.

[144] Certain positions, such as those involving developing and submitting claims, as well as sales and marketing, create a greater organizational legal exposure, and therefore require specialized training. DMEPOS suppliers should fill such positions with individuals who have the appropriate educational background, training, experience, and credentials.

[145] Where the DMEPOS supplier has a culturally diverse employee base, the standards of conduct should be translated into other languages and written at appropriate reading levels.

[146] The OIG recognizes that not all standards, policies and procedures need to be communicated to all employees. However, the OIG believes that the bulk of the standards that relate to complying with fraud and abuse laws and other ethical areas should be addressed and made part of all employees' training. The DMEPOS supplier should determine what additional training to provide categories of employees based upon their job responsibilities.

[147] Government, in this context, includes the appropriate Medicare DMERC(s).

[148] In addition, where feasible, the OIG recommends that a DMEPOS supplier afford outside contractors and its physician clients that opportunity to participate in the DMEPOS supplier's compliance training and educational programs, or develop their own programs that complement the DMEPOS supplier's standards of conduct, compliance requirements and other rules and practices.

[149] Currently, the OIG is monitoring a significant number of corporate integrity agreements that require many of these training elements. The OIG usually requires a minimum of one to three hours annually for basic training in compliance areas. Additional training is required for specialty fields such as billing, coding, sales and marketing.

[150] Appropriate coding and billing depends upon the quality and completeness of documentation. Therefore, the OIG believes that the DMEPOS supplier must foster an environment where interactive communication is encouraged.

[151] Post training tests can be used to assess the success of training provided and employee comprehension of the DMEPOS supplier's policies and procedures.

important for the compliance officer to supervise and coordinate the training program.

The OIG recommends that attendance and participation in training programs be made a condition of continued employment and that failure to comply with training requirements should result in disciplinary action, including possible termination, when such failure is serious. Adherence to the provisions of the compliance program, such as training requirements, should be a factor in the annual evaluation of each employee. The DMEPOS supplier should retain adequate records of its training of employees, including attendance logs and material distributed at training sessions.

3. Continuing Education on Compliance Issues. It is essential that compliance issues remain at the forefront of the DMEPOS supplier's priorities. The OIG recommends that DMEPOS supplier compliance programs address the need for periodic professional education courses for DMEPOS supplier personnel. In particular, the DMEPOS supplier should ensure that coding personnel receive annual professional training on the updated codes for the current year and have knowledge of the SADMERC's HCPCs coding helpline. [152]

In order to maintain a sense of seriousness about compliance in a DMEPOS supplier's operations, the DMEPOS supplier must continue to disseminate the compliance message. One effective mechanism for maintaining a consistent presence of the compliance message is to publish a monthly newsletter to address compliance concerns. This would allow the DMEPOS supplier to address specific examples of problems the company encountered during its ongoing audits and risk analyses, while reinforcing the DMEPOS supplier's firm commitment to the general principles of compliance and ethical conduct. The newsletter could also include the risk areas published by the OIG in its Special Fraud Alerts. Finally, the DMEPOS supplier could use the newsletter as a mechanism to address areas of ambiguity in the coding and billing process and/or its sales and marketing practices. The DMEPOS supplier should maintain its newsletters in a central location to document the guidance offered, and provide new employees with access to guidance previously provided.

[152] See note 93.

D. Developing Effective Lines of Communication

1. Access to the Compliance Officer. An open line of communication between the compliance officer and DMEPOS supplier employees is equally important to the successful implementation of a compliance program and the reduction of any potential for fraud, abuse and waste. Written confidentiality and non-retaliation policies should be developed and distributed to all employees to encourage communication and the reporting of incidents of potential fraud. [153] The compliance committee should also develop several independent reporting paths for an employee to report fraud, waste or abuse so that such reports cannot be diverted by supervisors or other personnel.

The OIG encourages the establishment of a procedure for personnel to seek clarification from the compliance officer or members of the compliance committee in the event of any confusion or question regarding a DMEPOS supplier policy, practice, or procedure. Questions and responses should be documented and dated and, if appropriate, shared with other staff so that standards, policies, practices, and procedures can be updated and improved to reflect any necessary changes or clarifications. The compliance officer may want to solicit employee input in developing these communication and reporting systems.

2. Hotlines and Other Forms of Communication. The OIG encourages the use of hotlines, [154] e-mails, written memoranda, newsletters, suggestion boxes and other forms of information exchange to maintain these open lines of communication. [155] If the DMEPOS supplier establishes a hotline, the telephone number should be made readily available to all employees and independent contractors, possibly by circulating the number on wallet cards or conspicuously posting the telephone number in common work areas. [156] Employees should be permitted to report matters on an anonymous basis. [157] Matters reported through the hotline or other communication sources that suggest substantial violations of compliance policies, Federal, State or private payor health care program requirements, regulations, or statutes should be documented and investigated promptly to determine their veracity. A log should be maintained by the compliance officer that records such calls, including the nature of any investigation and its results. [158] Such information should be included in reports to the owner(s), governing body, the CEO, president, and compliance committee. [159] Further, while the DMEPOS supplier should always strive to maintain the confidentiality of an employee's identity, it should also explicitly communicate that there may be a point where the individual's identity may become known or may have to be revealed.

The OIG recognizes that assertions of fraud and abuse by employees who may have participated in illegal conduct or committed other malfeasance raise numerous complex legal and management issues that should be examined on a case-by-case basis. The compliance officer should work closely with legal counsel, who can provide guidance regarding such issues.

E. Enforcing Standards Through Well-Publicized Disciplinary Guidelines

1. Discipline Policy and Actions. An effective compliance program should include guidance regarding disciplinary action for corporate officers, managers, employees, and other health care professionals who have failed to comply with the DMEPOS supplier's standards

[153] The OIG believes that whistleblowers should be protected against retaliation, a concept embodied in the provisions of the False Claims Act. See 31 U.S.C. 3730(h). In many cases, employees sue their employers under the False Claims Act's *qui tam* provisions out of frustration because of the company's failure to take action when a questionable, fraudulent, or abusive situation was brought to the attention of senior corporate officials.

[154] The OIG recognizes that it may not be financially feasible for a smaller DMEPOS supplier to maintain a telephone hotline dedicated to receiving calls solely on compliance issues. These companies may want to explore alternative methods, e.g., outsourcing the hotline or establishing a written method of confidential disclosure.

[155] In addition to methods of communication used by current employees, an effective employee exit interview program could be designed to solicit information from departing employees regarding potential misconduct and suspected violations of DMEPOS supplier policies and procedures.

[156] DMEPOS suppliers should also post in a prominent, available area the HHS–OIG Hotline telephone number, 1–800–447–8477 (1–800–HHS–TIPS), in addition to any company hotline number that may be posted.

[157] The OIG recognizes that guaranteeing anonymity may be infeasible for small DMEPOS suppliers. In such instances, we recommend DMEPOS employees need not fear retribution when reporting a portential violation.

[158] To efficiently and accurately fulfill such an obligation, the DMEPOS supplier should create an intake form for all compliance issues identified through reporting mechanisms. The form could include information concerning the date that the potential problem was reported, the internal investigative methods utilized, the results of the investigation, any corrective action implemented, any disciplinary measures imposed, and any overpayments returned.

[159] Information obtained over the hotline may provide valuable insight into management practices and operations, whether reported problems are actual or perceived.

of conduct, policies and procedures, Federal and State statutes, rules, and regulations or Federal, State or private payor health care program requirements. It should also address disciplinary actions for those who have engaged in wrongdoing, which has the potential to impair the DMEPOS supplier's status as a reliable, honest, and trustworthy health care provider.

The OIG believes that the compliance program should include a written policy statement setting forth the degrees of disciplinary actions that may be imposed upon corporate officers, managers, employees, and other health care professionals for failing to comply with the DMEPOS supplier's standards, policies, and applicable statutes and regulations. Intentional or reckless noncompliance should subject transgressors to significant sanctions. Such sanctions could range from oral warnings to suspension, termination, or financial penalties, as appropriate. Each situation must be considered on a case-by-case basis to determine the appropriate sanction. The written standards of conduct should elaborate on the procedures for handling disciplinary problems and those who will be responsible for taking appropriate action. Some disciplinary actions can be handled by managers, while others may have to be resolved by the owner(s), president or CEO. Disciplinary action may be appropriate where a responsible employee's failure to detect a violation is attributable to his or her negligence or reckless conduct. Personnel should be advised by the DMEPOS supplier that disciplinary action will be taken on a fair and equitable basis. Managers and supervisors should be made aware that they have a responsibility to discipline employees in an appropriate and consistent manner.

It is vital to publish and disseminate the range of disciplinary standards for improper conduct and to educate corporate officers, managers, and other DMEPOS supplier employees regarding these standards. The consequences of noncompliance should be consistently applied and enforced, in order for the disciplinary policy to have the required deterrent effect. All levels of employees should be subject to the same types of disciplinary action for the commission of similar offenses. The commitment to compliance applies to all personnel levels within a DMEPOS supplier. The OIG believes that corporate officers, managers, supervisors, and health care professionals should be held accountable for failing to comply with, or for the foreseeable failure of their subordinates to adhere to, the applicable standards, statutes, rules, regulations and procedures.

2. New Employee Policy. For all new employees who have discretionary authority to make decisions that may involve compliance with the law or compliance oversight, DMEPOS suppliers should conduct a reasonable and prudent background investigation, including a reference check,[160] as part of every such employment application. The application should specifically require the applicant to disclose any criminal conviction, as defined by 42 U.S.C. 1320a–7(i), or exclusion action. In accordance with the compliance program, DMEPOS supplier policies should prohibit the employment of individuals who have been recently convicted of a criminal offense related to health care or who are listed as debarred, excluded, or otherwise ineligible for participation in Federal health care programs (as defined in 42 U.S.C. 1320a–7b(f)).[161] In addition, pending the resolution of any criminal charges or proposed debarment or exclusion, the OIG recommends that such individuals should be removed from direct responsibility for, or involvement with, the DMEPOS supplier's business operations related to any Federal health care program. In addition, we recommend the DMEPOS supplier remove such individual from any position(s) for which the individual's salary or the items or services rendered, ordered, or prescribed by the individual are paid in whole or part, directly or indirectly, by Federal health care programs or otherwise with Federal funds.[162] Similarly, with regard to current employees or independent contractors, if resolution of the matter results in conviction, debarment, or exclusion, then the DMEPOS supplier should remove the individual from direct responsibility for or involvement with all Federal health care programs.

[160] See notes 132–135. Since the employees of DMEPOS suppliers have access to potentially vulnerable people and their property, DMEPOS suppliers should also strictly scrutinize whether it should employ individuals who have been convicted of crimes of neglect, violence or financial misconduct.

[161] Likewise, DMEPOS supplier compliance programs should establish standards prohibiting the execution of contracts with companies that have been recently convicted of a criminal offense related to health care or that are listed by a federal agency as debarred, excluded, or otherwise ineligible for participation in Federal health care programs. See notes 133 and 134.

[162] Prospective employees who have been officially reinstated into the Medicare and Medicaid programs by the OIG may be considered for employment upon proof of such reinstatement.

F. Auditing and Monitoring

An ongoing evaluation process is critical to a successful compliance program. The OIG believes that an effective program should incorporate thorough monitoring of its implementation and regular reporting to the DMEPOS supplier's corporate officers.[163] Compliance reports created by this ongoing monitoring, including reports of suspected noncompliance, should be maintained by the compliance officer and shared with the DMEPOS supplier's corporate officers and the compliance committee. The extent and frequency of the audit function may vary depending on factors such as the size of the DMEPOS supplier, the resources available to the DMEPOS supplier, the DMEPOS supplier's prior history of noncompliance, and the risk factors that are prevalent in a particular DMEPOS supplier.

Although many monitoring techniques are available, one effective tool to promote and ensure compliance is the performance of regular, periodic compliance audits by internal or external auditors who have expertise in Federal and State health care statutes, rules, regulations, and Federal, State and private payor health care program requirements. The audits should focus on the different DMEPOS supplier's departments, including external relationships with third-party contractors, specifically those with substantive exposure to Government enforcement actions. At a minimum, these audits should be designed to address the DMEPOS supplier's compliance with laws governing kickback arrangements, the physician self-referral prohibition, pricing, contracts, claim development and submission, reimbursement, sales and marketing. In addition, the audits and reviews should examine the DMEPOS supplier's compliance with the Federal, State and private payor supplier standards and the specific rules and policies that have been the focus of particular attention on the part of the Medicare DMERCs, and law enforcement, as evidenced by educational and other communications from OIG Special Fraud Alerts, advisory opinions, OIG audits and evaluations,

[163] Even when a DMEPOS supplier is owned by a larger corporate entity, the regular auditing and monitoring of the compliance activities of an individual DMEPOS supplier must be a key feature in any annual review. Appropriate reports on audit findings should be periodically provided and explained to a parent organization's senior staff and officers.

and law enforcement's initiatives.[164] In addition, the DMEPOS supplier should focus on any areas of specific concern identified within that DMEPOS supplier and those that may have been identified by any entity, whether Federal, State, private or internal.

Monitoring techniques may include sampling protocols that permit the compliance officer to identify and review variations from an established baseline.[165] Significant variations from the baseline should trigger a reasonable inquiry to determine the cause of the deviation. If the inquiry determines that the deviation occurred for legitimate, explainable reasons, the compliance officer and DMEPOS supplier management may want to limit any corrective action or take no action. If it is determined that the deviation was caused by improper procedures, misunderstanding of rules, including fraud and systemic problems, the DMEPOS supplier should take prompt steps to correct the problem.[166] Any overpayments discovered as a result of such deviations should be returned promptly to the affected payor, with the following information: (1) That the refund is being made pursuant to a voluntary compliance program; (2) a description of the complete causes and circumstances surrounding the overpayment; (3) the methodology by which the overpayment was determined; (4) the amount of the overpayment; and (5) any claim-specific information, reviewed as part of the self-audit, used to determine the overpayment (e.g., beneficiary health insurance claims number, claim number, date of service, and payment date).

An effective compliance program should also incorporate periodic (at least annual) reviews of whether the program's compliance elements have been satisfied, e.g., whether there has been appropriate dissemination of the program's standards, training, ongoing educational programs, and disciplinary actions, among other elements.[167] This process will verify actual conformance by all departments with the compliance program and may identify the necessity for improvements to be made to the compliance program, as well as the DMEPOS supplier's operations. Such reviews could support a determination that appropriate records have been created and maintained to document the implementation of an effective program.[168] However, when monitoring discloses that deviations were not detected in a timely manner due to program deficiencies, appropriate modifications must be implemented. Such evaluations, when developed with the support of management, can help ensure compliance with the DMEPOS supplier's policies and procedures.

As part of the review process, the compliance officer or reviewers should consider techniques such as:

- Testing billing staff on their knowledge of reimbursement coverage criteria and official coding guidelines (e.g., present hypothetical scenarios of situations experienced in daily practice and assess responses);
- On-site visits to all facilities and locations;
- Ongoing risk analysis and vulnerability assessments of the DMEPOS supplier's operations;
- Assessment of existing relationships with physicians, and other potential referral sources;
- Unannounced audits, mock surveys, and investigations;
- Examination of DMEPOS supplier complaint logs;
- Checking personnel records to determine whether any individuals who have been reprimanded for compliance issues in the past are among those currently engaged in improper conduct;
- Interviews with personnel involved in management, operations, sales and marketing, claim development and submission, and other related activities;
- Questionnaires developed to solicit impressions of the DMEPOS supplier's employees;
- Interviews with physicians or other authorized persons who order services provided by the DMEPOS supplier;
- Interviews with independent contractors who provide services to the DMEPOS supplier;
- Reviews of medical necessity documentation (e.g., physicians orders, CMNs), and other documents that support claims for reimbursement;
- Validation of qualifications of physicians or other authorized persons who order services provided by the DMEPOS supplier;
- Evaluation of written materials and documentation outlining the DMEPOS supplier's policies and procedures; and
- Utilization/trend analyses that uncover deviations, positive or negative, for specific HCPCs codes or types of items over a given period.

The reviewers should:

- Possess the qualifications and experience necessary to adequately identify potential issues with the subject matter to be reviewed;
- Be objective and independent of line management;[169]
- Have access to existing audit and health care resources, relevant personnel, and all relevant areas of operation;
- Present written evaluative reports on compliance activities to the owner(s), president, CEO, governing body, and members of the compliance committee on a regular basis, but not less than annually; and
- Specifically identify areas where corrective actions are needed.

We recommend these audit reports be prepared and submitted to the compliance officer and senior management to ensure they are aware of the results. We suggest the reports specifically identify areas where corrective actions are needed. With these reports, DMEPOS supplier management can take whatever steps are necessary to correct past problems and prevent them from recurring. In certain cases, subsequent reviews or studies would be advisable to ensure that the recommended corrective actions have been implemented successfully.

The DMEPOS supplier should document its efforts to comply with applicable Federal and State statutes, rules, and regulations, and Federal, State and private payor health care program requirements. For example, where a DMEPOS supplier, in its efforts to comply with a particular statute, regulation or program requirement, requests advice from a Government agency (including a Medicare DMERC) charged with administering a Federal health care program, the DMEPOS supplier should document and retain a record of the request and any written or

[164] See also section II.A.2.

[165] The OIG recommends that when a compliance program is established in a DMEPOS supplier, the compliance officer, with the assistance of department managers, should take a ''snapshot'' of operations from a compliance perspective. This assessment can be undertaken by outside consultants, law or accounting firms, or internal staff, with authoritative knowledge of health care compliance requirements. This ''snapshot,'' often used as part of benchmarking analyses, becomes a baseline for the compliance officer and other managers to judge the DMEPOS supplier's progress in reducing or eliminating potential areas of vulnerability.

[166] In addition, when appropriate, as referenced in section G.2, below, reports of fraud or systemic problems should also be made to the appropriate governmental authority.

[167] One way to assess the knowledge, awareness, and perceptions of the DMEPOS supplier's employees is through the use of a validated survey instrument (e.g., employee questionnaires, interviews, or focus groups).

[168] Such records should include, but not be limited to, logs of hotline calls, logs of training attendees, training agenda and materials, and summaries of corrective action and improvements with respect to DMEPOS supplier policies as a result of compliance activities.

[169] The OIG recognizes that DMEPOS suppliers that are small in size and have limited resources may not be able to use internal reviewers who are not part of line management or hire outside reviewers.

oral response, including the identity and position of the individual providing the response. DMEPOS suppliers should take the same steps when requesting advice from private payors. This step is extremely important if the DMEPOS supplier intends to rely on that response to guide it in future decisions, actions, or claim reimbursement requests or appeals. A log of oral inquiries between the DMEPOS supplier and third parties will help the organization document its attempts at compliance. In addition, the DMEPOS supplier should maintain records relevant to the issue of whether its reliance was ''reasonable'' and whether it exercised due diligence in developing procedures and practices to implement the advice.

G. Responding to Detected Offenses and Developing Corrective Action Initiatives

1. Violations and Investigations. Violations of a DMEPOS supplier's compliance program, failures to comply with applicable Federal or State statutes, rules, regulations or Federal, State or private payor health care program requirements, and other types of misconduct threaten a DMEPOS supplier's status as a reliable, honest and trustworthy health care provider. Detected but uncorrected misconduct can seriously endanger the mission, reputation, and legal status of the DMEPOS supplier. Consequently, upon reports or reasonable indications of suspected noncompliance, it is important that the compliance officer or other management officials immediately investigate the conduct in question to determine whether a material violation of applicable law, rules or program instructions or the requirements of the compliance program has occurred, and if so, take decisive steps to correct the problem.[170] As appropriate, such steps may include an immediate referral to criminal and/or civil law enforcement authorities, a corrective action plan,[171] a report to the Government,[172] and the return of any overpayments, if applicable.

Where potential fraud or False Claims Act liability is not involved, the OIG recommends that the DMEPOS supplier promptly return overpayments to the affected payor as they are discovered. However, even if the overpayment detection and return process is working and is being monitored by the DMEPOS supplier, the OIG still believes that the compliance officer needs to be made aware of these overpayments, violations, or deviations that may reveal trends or patterns indicative of a systemic problem.

Depending upon the nature of the alleged violations, an internal investigation will probably include interviews and a review of relevant documents, such as submitted claims and CMNs. Some DMEPOS suppliers should consider engaging outside auditors or health care experts to assist in an investigation. Records of the investigation should contain documentation of the alleged violation, a description of the investigative process (including the objectivity of the investigators and methodologies utilized), copies of interview notes and key documents, a log of the witnesses interviewed and the documents reviewed, the results of the investigation, e.g., any disciplinary action taken, and any corrective action implemented. Although any action taken as the result of an investigation will necessarily vary depending upon the DMEPOS supplier and the situation, DMEPOS suppliers should strive for some consistency by utilizing sound practices and disciplinary protocols.[173] Further, after a reasonable period, the compliance officer should review the circumstances that formed the basis for the investigation to determine whether similar problems have been uncovered or modifications of the compliance program are necessary to prevent and detect other inappropriate conduct or violations.

If an investigation of an alleged violation is undertaken and the compliance officer believes the integrity of the investigation may be at stake because of the presence of employees under investigation, those subjects should be removed from their current work activity until the investigation is completed (unless an internal or Government-led undercover operation known to the DMEPOS supplier is in effect). In addition, the compliance officer should take appropriate steps to secure or prevent the destruction of documents or other evidence relevant to the investigation. If the DMEPOS supplier determines disciplinary action is warranted, it should be prompt and imposed in accordance with the DMEPOS supplier's written standards of disciplinary action.

2. Reporting. If the compliance officer, compliance committee or other management official discovers credible evidence of misconduct from any source and, after a reasonable inquiry, has reason to believe that the misconduct may violate criminal, civil, or administrative law, then the DMEPOS supplier should promptly report the existence of misconduct to the appropriate Federal and State authorities[174] within a reasonable period, but not more than sixty (60) days[175] after determining that there is credible evidence of a violation.[176] Prompt reporting will demonstrate the DMEPOS supplier's good faith and willingness to work with governmental authorities to correct and remedy the problem. In addition, reporting such conduct will be considered a mitigating

[170] Instances of non-compliance must be determined on a case-by-case basis. The existence, or amount, of a *monetary* loss to a health care program is not solely determinative of whether or not the conduct should be investigated and reported to governmental authorities. In fact, there may be instances where there is no readily identifiable monetary loss at all, but corrective action and reporting are still necessary to protect the integrity of the applicable program and its beneficiaries.

[171] Advice from the DMEPOS supplier's in-house counsel or an outside law firm may be sought to determine the extent of the DMEPOS supplier's liability and to plan the appropriate course of action.

[172] The OIG currently maintains a provider self-disclosure protocol that encourages providers to report suspected fraud. The concept of voluntary self-disclosure is premised on a recognition that the Government alone cannot protect the integrity of the Medicare and other Federal health care programs. Health care providers must be willing to police themselves, correct underlying problems, and work with the Government to resolve these matters. The self-disclosure protocol can be located on the OIG's web site at: http://www.dhhs.gov/progorg/oig.

[173] The parameters of a claim review subject to an internal investigation will depend on the circumstances surrounding the issue(s) identified. By limiting the scope of an internal audit to current billing, a DMEPOS supplier may fail to identify major problems and deficiencies in operations, as well as be subject to certain liability.

[174] Appropriate Federal and State authorities include the Office of Inspector General, Department of Health and Human Services; the Criminal and Civil Divisions of the Department of Justice; the U.S. Attorney in the relevant district(s); and the other investigative arms for the agencies administering the affected Federal or State health care programs, such as: the State Medicaid Fraud Control Unit; the Defense Criminal Investigative Service; the Department of Veterans Affairs; the Office of Inspector General, U.S. Department of Labor (which has primary criminal jurisdiction over FECA, Black Lung and Longshore programs); and the Office of Inspector General, U.S. Office of Personnel Management (which has primary jurisdiction over the Federal Employee Health Benefits Program).

[175] In contrast, to qualify for the ''not less than double damages'' provision of the False Claims Act, the report must be provided to the Government within thirty (30) days after the date when the DMEPOS supplier first obtained the information. See 31 U.S.C. 3729(a).

[176] The OIG believes that some violations may be so serious that they warrant immediate notification to governmental authorities, prior to, or simultaneous with, commencing an internal investigation, e.g., if the conduct: (1) is a clear violation of criminal law; (2) has a significant adverse effect on the quality of care provided to program beneficiaries (in addition to any other legal obligations regarding quality of care); or (3) indicates evidence of a systemic failure to comply with applicable laws, rules or program instructions or an existing corporate integrity agreement, regardless of the financial impact on Federal health care programs.

factor by the OIG in determining administrative sanctions (e.g., penalties, assessments and exclusion), if the reporting provider becomes the target of an OIG investigation.[177]

When reporting misconduct to the Government, a DMEPOS supplier should provide all evidence relevant to the alleged violation of applicable Federal or State law(s) and potential cost impact. The compliance officer, if applicable, with advice of counsel, and with guidance from the governmental authorities, could be requested to continue to investigate the reported violation. Once the investigation is completed, the compliance officer should be required to notify the appropriate governmental authority of the outcome of the investigation, including a description of the impact of the alleged violation on the operation of the applicable health care programs or their beneficiaries. If the investigation ultimately reveals that criminal, civil, or administrative violations have occurred, the appropriate Federal and State authorities [178] should be notified immediately.

3. Corrective Actions. As previously stated, the DMEPOS supplier should take appropriate corrective action, including prompt identification of any overpayment to the affected payor and the imposition of proper disciplinary action. If potential fraud or violations of the False Claims Act are involved, any repayment of the overpayment should be made as part of the discussion with the Government following a report of the matter to law enforcement authorities. Otherwise, the overpayment should be promptly refunded to the affected payor. The refund should also include the information as outlined in section II.F. Failure to disclose overpayments within a reasonable period of time could be interpreted as an intentional attempt to conceal the overpayment from the Government, thereby establishing an independent basis for a criminal violation with respect to the DMEPOS supplier, as well as any individuals who may have been involved. For this reason, DMEPOS supplier compliance programs should emphasize that overpayments obtained from Medicare or other Federal health care programs should be promptly disclosed and returned to the payor that made the erroneous payment.

[177] The OIG has published criteria setting forth those factors that the OIG takes into consideration in determining whether it is appropriate to exclude a health care provider from program participation pursuant to 42 U.S.C. 1320a-7(b)(7) for violations of various fraud and abuse laws. See 62 FR 67392 (December 24, 1997).

[178] See note 174.

III. Conclusion

Through this document, the OIG has attempted to provide a foundation to the process necessary to develop an effective and cost-efficient DMEPOS supplier compliance program. As previously stated, however, each program must be tailored to fit the needs and resources of an individual DMEPOS supplier, depending upon its size; number of locations; type of equipment provided; or corporate structure. The Federal and State health care statutes, rules, and regulations and Federal, State and private payor health care program requirements, should be integrated into every DMEPOS supplier's compliance program.

The OIG recognizes that the health care industry in this country, which reaches millions of beneficiaries and expends about a trillion dollars annually, is constantly evolving. In particular, legislation has been passed that creates additional Medicare program participation requirements, such as requiring DMEPOS suppliers to purchase surety bonds and expanding the Medicare supplier standards.[179] As stated throughout this guidance, compliance is a dynamic process that helps to ensure DMEPOS suppliers and other health care providers are better able to fulfill their commitment to ethical behavior, as well as meet the changes and challenges being imposed upon them by Congress and private insurers. Ultimately, it is OIG's hope that a voluntarily created compliance program will enable DMEPOS suppliers to meet their goals, improve the quality of service to patients, and substantially reduce fraud, waste, and abuse, as well as the cost of health care, to Federal, State and private health insurers.

Dated: January 22, 1999.

Michael Mangano,

Principal Deputy Inspector General.

[FR Doc. 99–2055 Filed 1–27–99; 8:45 am]

BILLING CODE: 4150–04–P

[179] See 63 FR 2926 (January 20, 1998).

DEPARTMENT OF HEALTH AND HUMAN SERVICES

National Institutes of Health

National Cancer Institute; Notice of Closed Meeting

Pursuant to section 10(d) of the Federal Advisory Committee Act, as amended (5 U.S.C. appendix 2), notice is hereby given of the following meeting.

The meeting will be closed to the public in accordance with the provisions set forth in sections 552b(c)(4) and 552b(c)(6), Title 5 U.S.C., as amended. The grant applications and the discussions could disclose confidential trade secrets or commercial property such as patentable material, and personal information concerning individuals associated with the grant applications, the disclosure of which would constitute a clearly unwarranted invasion of personal privacy.

Name of Committee: National Cancer Institute Initial Review Group, Subcommittee F—Manpower & Training.

Date: March 7–10, 1999.

Time: 6:30 p.m. to 2:00 p.m.

Agenda: To review and evaluate grant applications.

Place: Holiday Inn Central, 1501 Rhode Island Avenue, NW, Washington, DC 20005.

Contact Person: Mary Bell, Scientific Review Administrator, Division of Extramural Activities, National Cancer Institute, National Institutes of Health, PHS, DHHS, 6130 Executive Boulevard, Rockville, MD 20892, (301) 496–7978.

(Catalogue of Federal Domestic Assistance Program Nos. 93.392, Cancer Construction; 93.393, Cancer Cause and Prevention Research; 93.394, Cancer Detection and Diagnosis Research; 93.395, Cancer Treatment Research; 93.396, Cancer Biology Research; 93.397, Cancer Centers Support; 93.398, Cancer Research Manpower, 93.399, Cancer Control, National Institutes of Health, HHS)

Dated: January 22, 1999.

LaVerne Y. Stringfield,

Committee Management Officer, NIH.

[FR Doc. 99–1962 Filed 1–27–99; 8:45 am]

BILLING CODE 4140–01–M

DEPARTMENT OF HEALTH AND HUMAN SERVICES

National Institutes of Health

National Cancer Institute; Notice of Closed Meeting

Pursuant to section 10(d) of the Federal Advisory Committee Act, as amended (5 U.S.C. Appendix 2), notice is hereby given of the following meeting.

The meeting will be closed to the public in accordance with the provisions set forth in sections 552b(c)(4) and 552b(c)(6), Title 5 U.S.C., as amended. The grant applications and the discussions could disclose confidential trade secrets or commercial property such as patentable material, and personal information concerning individuals associated with the grant applications, the disclosure of which would constitute a clearly unwarranted invasion of personal privacy.

Name of Committee: National Cancer Institute Special Emphasis Panel, Oncogene

Deregulation Tumor Suppressor Gene Loss of Function in CLL.

Date: March 3, 1999.

Time: 11:00 a.m. to 4:00 p.m.

Agenda: To review and evaluate grant applications.

Place: 6130 Executive Boulevard, Rockville, MD 20852.

Contact Person: Kevin Ryder, Scientific Review Administrator, Grants Review Branch, National Cancer Institute, EPN Room 635, 6130 Executive Blvd. MSC 7408, Bethesda, MD 20892–7408, 301–402–2785.

(Catalogue of Federal Domestic Assistance Program Nos. 93.392, Cancer Construction; 93.393, Cancer Cause and Prevention Research; 93.394, Cancer Detection and Diagnosis Research; 93.395, Cancer Treatment Research; 93.396, Cancer Biology Research; 93.397, Cancer Centers Support; 93.398, Cancer Research Manpower; 93.399, Cancer Control, National Institutes of Health, HHS)

Dated: January 22, 1999.

LaVerne Y. Stringfield,

Committee Management Officer, NIH.

[FR Doc. 99–1963 Filed 1–27–99; 8:45 am]

BILLING CODE 4140–01–M

DEPARTMENT OF HEALTH AND HUMAN SERVICES

National Institutes of Health

National Cancer Institute; Notice of Closed Meeting

Pursuant to section 10(d) of the Federal Advisory Committee Act, as amended (5 U.S.C. Appendix 2), notice is hereby given of the following meeting.

The meeting will be closed to the public in accordance with the provisions set forth in sections 552b(c)(4) and 552b(c)(6), Title 5 U.S.C., as amended. The grant applications and the discussions could disclose confidential trade secrets or commercial property such as patentable material, and personal information concerning individuals associated with the grant applications, the disclosure of which would constitute a clearly unwarranted invasion of personal privacy.

Name of Committee: National Cancer Institute Special Emphasis Panel, Therapeutic Modulation of Angiogenesis in Disease.

Date: February 17–19, 1999.

Time: 4:00 pm to 5:00 pm.

Agenda: To review and evaluate grant applications.

Place: Double Tree Hotel, 1750 Rockville Pike, Rockville, MD 20852.

Contact Person: Lalita D. Palekar, Scientific Review Administrator, Special Review, Referral and Resources Branch, Division of Extramural Activities, National Cancer Institute, National Institutes of Health, 6130 Executive Boulevard/EPN–622B, Rockville, MD 20892–7405, 301/496–7575.

(Catalogue of Federal Domestic Assistance Program Nos. 93.392, Cancer Construction; 93.393, Cancer Cause and Prevention Research; 93.394, Cancer Detection and Diagnosis Research; 93.395, Cancer Treatment Research; 93.396, Cancer Biology Research; 93.397, Cancer Centers Support; 93.398, Cancer Research Manpower; 93.399, Cancer Control, National Institutes of Health, HHS)

Dated: January 22, 1999.

LaVerne Y. Stringfield,

Committee Management Officer, NIH.

[FR Doc. 99–1964 Filed 1–27–99; 8:45 am]

BILLING CODE 4140–01–M

DEPARTMENT OF HEALTH AND HUMAN SERVICES

National Institutes of Health

National Cancer Institute; Notice of Meeting

Pursuant to section 10(d) of the Federal Advisory Committee Act, as amended (5 U.S.C. Appendix 2), notice is hereby given of the meeting of the National Cancer Advisory Board.

The meeting will be open to the public as indicated below, with attendance limited to space available. Individuals who plan to attend and need special assistance, such as sign language interpretation or other reasonable accommodations, should notify the Contact Person listed below in advance of the meeting.

The meeting will be closed to the public in accordance with the provisions set forth in sections 552b(c)(4) and 552b(c)(6), Title 5 U.S.C., as amended. The grant applications and/or contract proposals and the discussions could disclose confidential trade secrets or commercial property such as patentable material, and personal information concerning individuals associated with the grant applications and/or contract proposals, the disclosure of which would constitute a clearly unwarranted invasion of personal privacy.

Name of Committee: National Cancer Advisory Board.

Date: February 8–10, 1999.

Name of Committee: National Cancer Advisory Board, Subcommittee on Cancer Centers.

Open: February 8, 1999, 7:00 pm to 8:30 pm.

Agenda: To discuss NCI Cancer Centers policies.

Place: The Hyatt Regency Hotel, 100 Bethesda Metro Center, Susquehana Severn Room, Bethesda, MD 20892.

Contact Person: Brian Kimes, Executive Secretary, Office of Centers, Training, and Resources, National Cancer Institute, National Institutes of Health, Executive Plaza North—Suite 502, 6130 Executive Boulevard, Rockville, MD 20892, (301) 496–8537.

Name of Committee: National Cancer Advisory Board, Subcommittee on Planning and Budget.

Open: February 9, 1999, 12:10 pm to 1:30 pm.

Agenda: To discuss the current and future initiatives of the NCI Bypass Budget.

Place: Building 31, C Wing, 6 Floor, Conference Room 10, National Institutes of Health, 3100 Center Drive, Bethesda, MD 20892.

Contact Person: Ms. Cherie Nichols, Executive Secretary, Office of Science Policy, National Cancer Institute, National Institutes of Health, Building 31, Room 11A03, 3100 Center Drive, Bethesda, MD 20892, (301) 496–5515.

Name of Committee: National Cancer Advisory Board.

Open: February 9, 1999, 9:00 am to 4:00 pm.

Agenda: Introductions and Welcome to New Members; Reports from NCI Director, President's Cancer Panel, American Association for Cancer Research, A110 and FOIA; Annual Delegation of Authority; Update on Geographic Patterns of Cancer Mortality in the U.S.; Legislative Update, and Cancer Surveillance Series Surveillance Implementation Group Report.

Place: Building 31, C Wing, 6 Floor, Conference Room 10, National Institutes of Health, 3100 Center Drive, Bethesda, MD 20892.

Closed: February 9, 1999, 4:15 pm to Adjournment.

Agenda: To review and discuss grant applications.

Place: Building 31, C Wing, 6 Floor, Conference Room 10, National Institutes of Health, 3100 Center Drive, Bethesda, MD 20892.

Open: February 10, 1999, 9:00 am to 12:05 pm.

Agenda: Annual Report on Gender and Minority Accrual to Clinical Trials; Update on Programs for Underserved Populations; Office of Cancer Complimentary and Alternative Medicine; Subcommittee Reports, New Business; and Future Agenda Items.

Place: Building 31, C Wing, 6 Floor, Conference Room 10, National Institutes of Health, 3100 Center Drive, Bethesda, MD 20892.

Contact Person: Marvin R. Kalt, Executive Secretary, Division of Extramural Activities, National Cancer Institute, National Institutes of Health, Executive Plaza North, Suite 600, 6130 Executive Boulevard, Rockville, MD 20892, (301) 496–5147.

(Catalogue of Federal Domestic Assistance Program Nos. 93.392, Cancer Construction; 93.393, Cancer Cause and Prevention Research; 93.394, Cancer Detection and Diagnosis Research; 93.395, Cancer Treatment Research; 93.396, Cancer Biology Research; 93.397, Cancer Centers Support; 93.398, Cancer Research Manpower; 93.399, Cancer Control, National Institutes of Health, HHS)

Dated: January 22, 1999.

LaVerne Y. Stringfield,

Committee Management Officer, NIH.

[FR Doc. 99–1965 Filed 1–27–99; 8:45 am]

BILLING CODE 4140–01–M

DEPARTMENT OF HEALTH AND HUMAN SERVICES

National Institutes of Health

National Institute of Neurological Disorders and Stroke; Notice of Closed Meetings

Pursuant to section 10(d) of the Federal Advisory Committee Act, as amended (5 U.S.C. Appendix 2), notice is hereby given of the following meetings.

The meetings will be closed to the public in accordance with the provisions set forth in sections 552b(c)(4) and 552b(c)(6), Title 5 U.S.C., as amended. The grant applications and the discussions could disclose confidential trade secrets or commercial property such as patentable material, and personal information concerning individuals associated with the grant applications, the disclosure of which would constitute a clearly unwarranted invasion of personal privacy.

Name of Committee: National Institute of Neurological Disorders and Stroke Special Emphasis Panel.

Date: February 22–23, 1999.

Time: 8:30 a.m. to 5 p.m.

Agenda: To review and evaluate grant applications.

Place: Holidasy Inn Georgetown, 2101 Wisconsin Ave., Washington, DC 20007.

Contact Person: Alan L. Willard, Scientific Review Administrator, Scientific Review Branch, Division of Extramural Activities, NINDS, National Institutes of Health, PHS, DHHS, Federal Building, Room 9C10, 7550 Wisconsin Avenue, Bethesda, MD 20892, 301–496–9223.

Name of Committee: National Institute of Neurological Disorders and Stroke Special Emphasis Panel.

Date: Februrary 26, 1999.

Time: 9 a.m. to 10 a.m.

Agenda: To review and evaluate grant applications.

Place: Hotel Washington, 15th St. & Pennsylvania Ave., NW., Washington, DC 20005.

Contact Person: Alan Willard, Scientific Review Administrator, Scientific Review Branch, Division of Extramural Activities, NINDS, National Institutes of Health, PHS, DHHS, Federal Building, Room 9C10, 7550 Wisconsin Avenue, Bethesda, MD 20892, 301–496–9223.

(Catalogue of Federal Domestic Assistance Program Nos. 93.853, Clinical Research Related to Neurological Disorders; 93.854, Biological Basis Research in the Neurosciences, National Institutes of Health, HHS)

Dated: January 21, 1999.

LaVerne Y. Stringfield,

Committee Management Officer, NIH.

[FR Doc. 99–1921 Filed 1–27–99; 8:45 am]

BILLING CODE 4140–01–M

DEPARTMENT OF HEALTH AND HUMAN SERVICES

National Institutes of Health

National Institute of Neurological Disorders and Stroke; Notice of Closed Meeting

Pursuant to section 10(d) of the Federal Advisory Committee Act, as amended (5 U.S.C. Appendix 2), notice is hereby given of the following meeting.

The meeting will be closed to the public in accordance with the provisions set forth in sections 552b(c)(4) and 552b(c)(6), Title 5 U.S.C., as amended. The contract proposals and the discussions could disclose confidential trade secrets or commercial property such as patentable material, and personal information concerning individuals associated with the contract proposals, the disclosure of which would constitute a clearly unwarranted invasion of personal privacy.

Name of Committee: National Institute of Neurological Disorders and Stroke Special Emphasis Panel.

Date: February 17, 1999.

Time: 1:00 p.m. to 3:00 p.m.

Agenda: To review and evaluate contract proposals.

Place: 7550 Wisconsin Avenue, room 9C10, Bethesda, MD 20892, (Telephone Conference Call).

Contact Person: Phillip F. Wiethorn, Scientific Review Administrator, Scientific Review Branch, Division of Extramural Activities, Ninds, National Institutes of Health, PHS, DHHS, Federal Building, Room 9C10, 7550 Wisconsin Avenue, Bethesda, MD 20892, 301–496–9223.

(Catalogue of Federal Domestic Assistance Program Nos. 93.853, Clinical Research Related to Neurological Disorders; 93.854, Biological Basis Research in the Neurosciences, National Institutes of Health, HHS)

Dated: January 21, 1999.

LaVerne Y. Stringfield,

Committee Management Officer, NIH.

[FR Doc. 99–1922 Filed 1–27–99; 8:45 am]

BILLING CODE 4140–01–M

DEPARTMENT OF HEALTH AND HUMAN SERVICES

National Institutes of Health

National Institute of Allergy and Infectious Diseases; Notice of Closed Meeting

Pursuant to section 10(d) of the Federal Advisory Committee Act, as amended (5 U.S.C. Appendix 2), notice is hereby given of the following meeting.

The meeting will be closed to the public in accordance with the provisions set forth in sections 552b(c)(4) and 552b(c)(6), Title 5 U.S.C., as amended. The grant applications and the discussions could disclose confidential trade secrets or commercial property such as patentable material, and personal information concerning individuals associated with the grant applications, the disclosure of which would constitute a clearly unwarranted invasion of personal privacy.

Name of Committee: National Institute of Allergy and Infectious Diseases Special Emphasis Panel ICIDR.

Date: March 3–5, 1999.

Time: 9:00 a.m. to 5:30 p.m.

Agenda: To review and evaluate grant applications.

Place: Georgetown Holiday Inn, 2101 Wisconsin Ave, N.W., Washington, DC 20007.

Contact Person: Gary S. Madonna, Scientific Review Administrator, Scientific Review Program, Division of Extramural Activities, NIAID, NIH, Solar Building, Room 4C21, 6003 Executive Boulevard MSC 7610, Bethesda, MD 20892–7610, 301–496–3528.

(Catalogue of Federal Domestic Assistance Program Nos. 93.855, Allergy, Immunology, and Transplantation Research; 93.856, Microbiology and Infectious Diseases Research, National Institutes of Health, HHS)

Dated: January 22, 1999.

LaVerne Y. Stringfield,

Committee Management Officer, NIH.

[FR Doc. 99–1960 Filed 1–27–99; 8:45 am]

BILLING CODE 4140–01–M

DEPARTMENT OF HEALTH AND HUMAN SERVICES

National Institutes of Health

National Institute of Allergy and Infectious Diseases; Notice of Closed Meeting

Pursuant to section 10(d) of the Federal Advisory Committee Act, as amended (5 U.S.C. Appendix 2), notice is hereby given of the following meeting.

The meeting will be closed to the public in accordance with the provision

set forth in sections 552b(c)(4) and 552b(c)(6), Title 5 U.S.C., as amended. The grant applications and the discussions could disclose confidential trade secrets or commercial property such as patentable material, and personal information concerning individuals associated with the grant applications, the disclosure of which would constitute a clearly unwarranted invasion of personal privacy.

Name of Committee: National Institute of Allergy and Infectious Diseases Special Emphasis Panel International Collaborations in Infectious Disease Research.

Date: Febraury 22–24, 1999.

Time: 8:00 a.m. to 5:00 p.m.

Agenca: To review and evaluate grant applications.

Place: Hyatt Arlington, 1325 Wilson Blvd., Arlington, VA 22209.

Contact Person: M. Sayeed Quraishi, Scientific Review Administrator, Scientific Review Program, Division of Extramural Activities, NIAID, NIH, Solar Building, Room 4C22, 6003 Executive Bouleard MSC 7610, Bethesda, MD 20892–7610, Bethesda, MD 20892–7610, 301–496–7465.

(Catalogue of Federal Domestic Assistance Program Nos. 93.855, Allergy, Immunology, and Transplantation Research; 93.856, Microbiology and Infectious Diseases Research, National Institutes of Health, HHS)

Dated: January 22, 1999.

LaVerne Y. Stringfield,

Committee Management Officer, NIH.

[FR Doc. 99–1961 Filed 1–27–99; 8:45 am]

BILLING CODE 4140–01–M

DEPARTMENT OF HEALTH AND HUMAN SERVICES

National Institutes of Health

National Institute of Diabetes and Digestive and Kidney Diseases; Notice of Closed Meeting

Pursuant to section 10(d) of the Federal Advisory Committee Act, as amended (5 U.S.C. Appendix 2), notice is hereby given of the following meeting.

The meeting will be closed to the public in accordance with the provisions set forth in sections 552b(c)(4) and 552b(c)(6), Title 5 U.S.C., as amended. The grant applications and the discussions could disclose confidential trade secrets or commercial property such as patentable material, and personal information concerning individuals associated with the grant applications, the disclosure of which would constitute a clearly unwarranted invasion of personal privacy.

Name of Committee: National Institute of Diabetes and Digestive and Kidney Diseases Special Emphasis Panel, ZDK–1 GRB–D (M2).

Date: January 26, 1999.

Time: 10:00 am to Adjournment.

Agenda: To review and evaluate grant applications.

Place: National Institutes of Health, Natcher Bldg., 45 Center Drive, Room 6AS–37, Bethesda, MD 20892 (Telephone Conference Call).

Contact Person: Ann A. Hagan, Chief, Review Branch, National Institute of Diabetes, Digestive and Kidney Diseases, National Institutes of Health, PHS, DHHS, Rm. 6AS–37, Bldg., 45, Bethesda, MD 20892, (301) 594–8886.

This notice is being published less than 15 days prior to the meeting due to the timing limitations imposed by the review and funding cycle.

(Catalogue of Federal Domestic Assistance Program Nos. 93.847, Diabetes, Endocrinology and Metabolic Research; 93.848, Digestive Diseases and Nutrition Research; 93.849, Kidney Diseases, Urology and Hematology Research, National Institutes of Health, HHS)

Dated: January 22, 1999.

LaVerne Y. Stringfield,

Committee Management Officer, NIH.

[FR Doc. 99–1966 Filed 1–27–99; 8:45 am]

BILLING CODE 4140–01–M

DEPARTMENT OF HEALTH AND HUMAN SERVICES

National Institutes of Health

Center for Scientific Review; Notice of Closed Meetings

Pursuant to section 10(d) of the Federal Advisory Committee Act, as amended (5 U.S.C. Appendix 2), notice is hereby given of the following meetings.

The meetings will be closed to the public in accordance with the provisions set forth in sections 552b(c)(4) and 552b(c)(6), Title 5 U.S.C., as amended. The grant applications and the discussions could disclose confidential trade secrets or commercial property such as patentable material, and personal information concerning individuals associated with the grant applications, the disclosure of which would constitute a clearly unwarranted invasion of personal privacy.

Name of Committee: Center for Scientific Review Special Emphasis Panel.

Date: January 27, 1999.

Time: 10:00 a.m. to 11:30 a.m.

Agenda: To review and evaluate grant applications.

Place: NIH, Rockledge 2, Bethesda, MD 20892, (Telephone Conference Call).

Contact Person: William C. Branche, Scientific Review Administrator, Center for Scientific Review, National Institutes of Health, 6701 Rockledge Drive, Room 4182, MSC 7808, Bethesda, MD 20892, (301) 435–1148.

This notice is being published less than 15 days prior to the meeting due to the timing limitations imposed by the review and funding cycle.

Name of Committee: Cell Development and Function Initial Review Group, Cellular Biology and Physiology Subcommittee 1.

Date: February 1–2, 1999.

Time: 8:00 a.m. to 5:00 p.m.

Agenda: To review and evaluate grant applications.

Place: Chevy Chase Holiday Inn, Chevy Chase, MD 20815.

Contact Person: James Deatherage, Scientific Review Administrator, Center for Scientific Review, National Institutes of Health, 6701 Rockledge Drive, Room 5140, MSC 7840, Bethesda, MD 20892, (301) 435–1023.

This notice is being published less than 15 days prior to the meeting due to the timing limitations imposed by the review and funding cycle.

Name of Committee: Oncological Sciences Initial Review Group, Chemical Pathology Study Section.

Date: February 3–5, 1999.

Time: 8:00 a.m. to 5:30 p.m.

Agenda: To review and evaluate grant applications.

Place: Double Tree Hotel, 2055 Harbor Boulevard, Ventura, CA 93001.

Contact Person: Syed Quadri, Scientific Review Administrator, Center for Scientific Review, National Institutes of Health, 6701 Rockledge Drive, Room 4132, Bethesda, MD 20892, (301) 435–1211.

This notice is being published less than 15 days prior to the meeting due to the timing limitations imposed by the review and funding cycle.

Name of Committee: Musculoskeletal and Dental Initial Review Group, General Medicine B Study Section.

Date: February 4–5, 1999.

Time: 8:00 a.m. to 4:30 p.m.

Agenda: To review and evaluate grant applications.

Place: Holiday Inn, 5520 Wisconsin Ave., Chevy Chase, MD 20815.

Contact Person: Shirley Hilden, PHD, Scientific Review Administrator, Center for Scientific Review, National Institutes of Health, 6701 Rockledge Drive, Room 4218, MSC 7814, Bethesda, MD 20892, (301) 435–1198.

This notice is being published less than 15 days prior to the meeting due to the timing limitations imposed by the review and funding cycle.

Name of Committee: Cell Development and Function Initial Review Group, Molecular Cytology Study Section.

Date: February 4–5, 1999.

Time: 8:00 a.m. to 5:00 p.m.

Agenda: To review and evaluate grant applications.

Place: Holiday Inn Bethesda, 8120 Wisconsin Avenue, Bethesda, MD 20814.

Contact Person: Ramesh K. Nayak, PHD, Scientific Review Administrator, Center for Scientific Review, National Institutes of Health, 6701 Rockledge Drive, Room 5146, MSC 7840, Bethesda, MD 20892, (301) 435–1026.

This notice is being published less than 15 days prior to the meeting due to the timing limitations imposed by the review and funding cycle.

(Catalogue of Federal Domestic Assistance Programs Nos. 93.306, Comparative Medicine, 93.306; 93.333, Clinical Research, 93.333, 93.337, 93.393–93.396, 93.837–93.844, 93.846–93.878, 93.892, 93.893, National Institutes of Health, HHS)

Dated: January 21, 1999.

LaVerne Y. Stringfield,

Committee Management Officer, NIH.

[FR Doc. 99–1923 Filed 1–27–99; 8:45 am]

BILLING CODE 4140–01–M

DEPARTMENT OF INTERIOR

Geological Survey

Notice of proposed Cooperative Research and Development Agreement (CRADA) Negotiations

SUMMARY: The United States Geological Survey (USGS) is contemplating entering into a CRADA with the American Petroleum Institute (API) to develop a computer model to quantify impacts on ground water from surface or near-surface spills of gasoline containing methyl tert-butyl ether. Information on the proposed CRADA is available to the public upon request at the following location: U.S. Geological Survey, 810 Bear Tavern Rd., Suite 206, West Trenton, New Jersey 08628.

INQUIRIES: For further information, contact Matthew A. Lahvis, U.S. Geological Survey, Waster Resources Division at the address given above; telephone (609) 771–3978, email: mlahvis@usgs.gov.

SUPPLEMENTARY INFORMATION: This notice is to meet the USGS requirement stipulated in the Survey Manual.

Robert M. Hirsch,

Chief Hydrologist.

[FR Doc. 99–2031 Filed 1–27–99; 8:45 am]

BILLING CODE 4310–Y7–M

DEPARTMENT OF THE INTERIOR

Geological Survey

Technology Transfer Act of 1986

AGENCY: U.S. Geological Survey, Interior.

ACTION: Notice of proposed Cooperative Research and Development Agreement (CRADA) negotiations.

SUMMARY: The United States Geological Survey (USGS) is planning to enter into a Cooperative Research and Development Agreement (CRADA) with Pictometry International, LLC. (Pictometry) for the purpose of developing a product that combines oblique 'Pictometric' images and USGS Digital Orthophoto Quadrangle (DOQ) images into a single Pictometric mosaic to create a ''virtual, computer-based Electronic Field Study.'' The combined imagery product will enable a wide range of customers, such as students, corporations, and government agencies, to answer questions about a specific geographic area that would not have been possible previously without physically visiting the site. Any other organization interested in pursuing the possibility of a CRADA for similar kinds of activities should contact the USGS.

ADDRESSES: Inquiries may be addressed to the Acting Chief of Research, U.S. Geological Survey, National Mapping Division, 500 National Center, 12201 Sunrise Valley Drive, Reston, Virginia 20192; Telephone (703) 648–4643, facsimile (703) 648–4706; Internet ''ebrunson@usgs.gov''.

FOR FURTHER INFORMATION CONTACT: Ernest B. Brunson, address above.

SUPPLEMENTARY INFORMATION: This notice is to meet the USGS requirement stipulated in the Survey Manual.

Dated: January 13, 1999.

Richard E. Witmer,

Chief, National Mapping Division.

[FR Doc. 99–2030 Filed 1–27–99; 8:45 am]

BILLING CODE 4310–Y7–M

DEPARTMENT OF THE INTERIOR

Geological Survey

Application Notice Describing the Areas of Interest and Establishing the Closing Date for Receipt of Applications Under the National Earthquake Hazards Reduction Program (NEHRP) for Fiscal Year (FY) 2000

AGENCY: Department of the Interior, U.S. Geological Survey.

ACTION: Notice.

SUMMARY: Applications are invited for research projects under the NEHRP.

The purpose of this Program is to support the USGS Earthquake Hazards Program by providing products for earthquake loss reduction to the public and private sectors and by carrying out research on earthquake occurrence and effects.

Applications may be submitted by educational institutions, private firms, private foundations, individuals, and agencies of state and local governments.

ADDRESSES: The program announcement is expected to be available on or about February 8, 1999. You may obtain a copy of Announcement No. 00HQPA0001 from the USGS Contracts and Grants Information Site at http://www.usgs.gov/contracts/nehrp/ or by writing Brian Heath, U.S. Geological Survey, Office of Acquisition and Federal Assistance—Mail Stop 205A, 12201 Sunrise Valley Drive, Reston, Virginia 20192, or by fax (703–648–7901).

DATES: The closing date for receipt of applications will be on or about June 1, 1999. The actual closing date will be specified in Announcement No. 00HQPA0001.

FOR FURTHER INFORMATION CONTACT: John Unger, Earthquake Hazards Reduction Program—U.S. Geological Survey, Mail Stop 905, 12201 Sunrise Valley Drive, Reston, Virginia 20192. Telephone: (703) 648–6722.

SUPPLEMENTARY INFORMATION: Authority for this program is contained in the Earthquake Hazards Reduction Act of 1977, Public Law 95–124 (42 U.S.C. 7701, et. seq.). The Office of Management and Budget Catalog of Federal Domestic Assistance number is 15.807.

Dated: January 20, 1999.

P. Patrick Leahy,

Chief, Geologic Division.

[FR Doc. 99–1996 Filed 1–27–99; 8:45 am]

BILLING CODE 4310–Y7–M

DEPARTMENT OF THE INTERIOR

Bureau of Indian Affairs

Indian Gaming

AGENCY: Bureau of Indian Affairs, Interior.

ACTION: Notice of amendment to approved Tribal-State Compact.

SUMMARY: Pursuant to section 11 of the Indian Gaming Regulatory Act of 1988, Pub. L. 100–497, 25 U.S.C. 2710, the Secretary of the Interior shall publish, in the **Federal Register**, notice of approved Tribal-State Compacts for the purpose of engaging in Class III (casino) gambling on Indian reservations. The Assistant Secretary—Indian Affairs, Department of the Interior, through his delegated authority, has approved the Third Amendment to the Tribal-State Compact for Class III Gaming between The Confederated Tribes of the Chehalis Reservation and the State of Washington, which was executed on November 23, 1998.

DATES: This action is effective January 28, 1999.

FOR FURTHER INFORMATION CONTACT: George T. Skibine, Director, Indian Gaming Management Staff, Bureau of Indian Affairs, Washington, D.C. 20240, (202) 219–4066.

Dated: January 14, 1999.

Kevin Gover,

Assistant Secretary—Indian Affairs.

[FR Doc. 99–1926 Filed 1–27–99; 8:45 am]

BILLING CODE 4310–02–P

DEPARTMENT OF THE INTERIOR

Bureau of Indian Affairs

Indian Gaming

AGENCY: Bureau of Indian Affairs, Interior.

ACTION: Notice of amendment to approved Tribal-State Compact.

SUMMARY: Pursuant to section 11 of the Indian Gaming Regulatory Act of 1988, Pub. L. 100–497, 25 U.S.C. 2710, the Secretary of the Interior shall publish, in the **Federal Register**, notice of approved Tribal-State Compacts for the purpose of engaging in Class III (casino) gambling on Indian reservations. The Assistant Secretary—Indian Affairs, Department of the Interior, through his delegated authority, has approved the Third Amendment to the Tribal-State Compact for Class III Gaming between the Jamestown S'Klallam Tribe and the State of Washington, which was executed on November 25, 1998.

DATES: This action is effective January 28, 1999.

FOR FURTHER INFORMATION CONTACT: George T. Skibine, Director Indian Gaming Management Staff, Bureau of Indian Affairs, Washington, DC 20240, (202) 219–4066.

Dated: January 14, 1999.

Kevin Gover,

Assistant Secretary—Indian Affairs.

[FR Doc. 99–1935 Filed 1–27–99; 8:45 am]

BILLING CODE 4310–02–P

DEPARTMENT OF THE INTERIOR

Bureau of Indian Affairs

Indian Gaming

AGENCY: Bureau of Indian Affairs, Interior.

ACTION: Notice of amendment to approved Tribal-State Compact.

SUMMARY: Pursuant to section 11 of the Indian Gaming Regulatory Act of 1988, Pub. L. 100–497, 25 U.S.C. 2710, the Secretary of the Interior shall publish, in the **Federal Register**, notice of approved Tribal-State Compacts for the purpose of engaging in Class III (casino) gambling on Indian reservations. The Assistant Secretary—Indian Affairs, Department of the Interior, through his delegated authority, has approved the Second Amendment to the Tribal-State Compact for Class III Gaming between the Muckleshoot Indian Tribe and the State of Washington, which was executed on November 25, 1998.

DATES: This action is effective January 28, 1999.

FOR FURTHER INFORMATION CONTACT: George T. Skibine, Director, Indian Gaming Management Staff, Bureau of Indian Affairs, Washington, DC 20240, (202) 219–4066.

Dated: January 14, 1999.

Kevin Gover,

Assistant Secretary—Indian Affairs.

[FR Doc. 99–1929 Filed 1–27–99; 8:45 am]

BILLING CODE 4310–02–P

DEPARTMENT OF THE INTERIOR

Bureau of Indian Affairs

Indian Gaming

AGENCY: Bureau of Indian Affairs, Interior.

ACTION: Notice of amendment to approved Tribal-State Compact.

SUMMARY: Pursuant to section 11 of the Indian Gaming Regulatory Act of 1988, Pub. L. 100–497, 25 U.S.C. 2710, the Secretary of the Interior shall publish, in the **Federal Register**, notice of approved Tribal-State Compacts for the purpose of engaging in Class III (casino) gambling on Indian reservations. The Assistant Secretary—Indian Affairs, Department of the Interior, through his delegated authority, has approved the Third Amendment to the Tribal-State Compact for Class III Gaming between the Nooksack Indian Tribe and the State of Washington, which was executed on December 2, 1998.

DATES: This action is effective January 28, 1999.

FOR FURTHER INFORMATION CONTACT: George T. Skibine, Director, Indian Gaming Management Staff, Bureau of Indian Affairs, Washington, DC 20240, (202) 219–4066.

Dated: January 14, 1999.

Kevin Gover,

Assistant Secretary—Indian Affairs.

[FR Doc. 99–1927 Filed 1–27–99; 8:45 am]

BILLING CODE 4310–02–P

DEPARTMENT OF THE INTERIOR

Bureau of Indian Affairs

Indian Gaming

AGENCY: Bureau of Indian Affairs, Interior.

ACTION: Notice of amendment to approved Tribal-State Compact.

SUMMARY: Pursuant to section 11 of the Indian Gaming Regulatory Act of 1988, Pub. L. 100–497, 25 U.S.C. 2710, the Secretary of the Interior shall publish, in the **Federal Register**, notice of approved Tribal-State Compacts for the purpose of engaging in Class III (casino) gambling on Indian reservations. The Assistant Secretary—Indian Affairs, Department of the Interior, through his delegated authority, has approved the Amendment to the Tribal-State Compact for Class III Gaming between the Port Gamble S'Klallam Tribe and the State of Washington, which was executed on November 30, 1998.

DATES: This action is effective January 28, 1999.

FOR FURTHER INFORMATION CONTACT: George T. Skibine, Director, Indian Gaming Management Staff, Bureau of Indian Affairs, Washington, DC 20240, (202) 219–4066.

Dated: January 14, 1999.

Kevin Gover,

Assistant Secretary—Indian Affairs.

[FR Doc. 99–1933 Filed 1–27–99; 8:45 am]

BILLING CODE 4310–02–P

DEPARTMENT OF THE INTERIOR

Bureau of Indian Affairs

Indian Gaming

AGENCY: Bureau of Indian Affairs, Interior.

ACTION: Notice of Amendment to Approved Tribal-State Compact.

SUMMARY: Pursuant to section 11 of the Indian Gaming Regulatory Act of 1988, Public Law 100–497, 25 U.S.C. 2710, the Secretary of the Interior shall publish, in the **Federal Register**, notice of approved Tribal-State Compacts for the purpose of engaging in Class III (casino) gambling on Indian reservations. The Assistant Secretary—Indian Affairs, Department of the Interior, through his delegated authority, has approved the Amendment to the Tribal-State Compact for Class III Gaming between the Puyallup Tribe of Indians and the State of Washington, which was executed on November 25, 1998.

DATES: This action is effective January 28, 1999.

FOR FURTHER INFORMATION CONTACT: George T. Skibine, Director, Indian Gaming Management Staff, Bureau of Indian Affairs, Washington, DC 20240, (202) 219–4066.

Dated: January 14, 1999.

Kevin Gover,

Assistant Secretary—Indian Affairs.

[FR Doc. 99–1924 Filed 1–27–99; 8:45 am]

BILLING CODE 4310–02–P

DEPARTMENT OF THE INTERIOR

Bureau of Indian Affairs

Indian Gaming

AGENCY: Bureau of Indian Affairs, Interior.

ACTION: Notice of amendment to approved Tribal-State Compact.

SUMMARY: Pursuant to section 11 of the Indian Gaming Regulatory Act of 1988, Pub. L. 100–497, 25 U.S.C. 2710, the Secretary of the Interior shall publish, in the **Federal Register**, notice of approved Tribal-State Compacts for the purpose of engaging in Class III (casino) gambling on Indian reservations. The Assistant Secretary—Indian Affairs, Department of the Interior, through his delegated authority, has approved the Amendment to the Tribal-State Compact for Class III Gaming between the Squaxin Island Tribe and the State of Washington, which was executed on November 25, 1998.

DATES: This action is effective January 28, 1999.

FOR FURTHER INFORMATION CONTACT: George T. Skibine, Director, Indian Gaming Management Staff, Bureau of Indian Affairs, Washington, DC 20240, (202) 219–4066.

Dated: January 8, 1999.

Kevin Gover,

Assistant Secretary—Indian Affairs.

[FR Doc. 99–1932 Filed 1–27–99; 8:45 am]

BILLING CODE 4310–02–P

DEPARTMENT OF THE INTERIOR

Bureau of Indian Affairs

Indian Gaming

AGENCY: Bureau of Indian Affairs, Interior.

ACTION: Notice of amendment to approved Tribal-State Compact.

SUMMARY: Pursuant to section 11 of the Indian Gaming Regulatory Act of 1988, Pub. L. 100–497, 25 U.S.C. 2710, the Secretary of the Interior shall publish, in the **Federal Register**, notice of approved Tribal-State Compacts for the purpose of engaging in Class III (casino) gambling on Indian reservations. The Assistant Secretary—Indian Affairs, Department of the Interior, through his delegated authority, has approved the First Amendment to the Tribal-State Compact for Class III Gaming between the Suquamish Tribe and the State of Washington, which was executed on November 30, 1998.

DATES: This action is effective January 28, 1999.

FOR FURTHER INFORMATION CONTACT: George T. Skibine, Director, Indian Gaming Management Staff, Bureau of Indian Affairs, Washington, DC 20240, (202) 219–4066.

Dated: January 14, 1999.

Kevin Gover,

Assistant Secretary—Indian Affairs.

[FR Doc. 99–1930 Filed 1–27–99; 8:45 am]

BILLING CODE 4310–02–P

DEPARTMENT OF THE INTERIOR

Bureau of Indian Affairs

Indian Gaming

AGENCY: Bureau of Indian Affairs, Interior.

ACTION: Notice of amendment to approved Tribal-State Compact.

SUMMARY: Pursuant to Section 11 of the Indian Gaming Regulatory Act of 1988, Pub. L. 100–497, 25 U.S.C. 2710, the Secretary of the Interior shall publish, in the **Federal Register**, notice of approved Tribal-State Compacts for the purpose of engaging in Class III (casino) gambling on Indian reservations. The Assistant Secretary—Indian Affairs, Department of the Interior, through his delegated authority, has approved the Third Amendment to the Tribal-State Compact for Class III Gaming between the Swinomish Indian Tribal Community and the State of Washington, which was executed on November 25, 1998.

DATES: This action is effective January 28, 1999.

FOR FURTHER INFORMATION CONTACT: George T. Skibine, Director, Indian Gaming Management Staff, Bureau of Indian Affairs, Washington, DC 20240, (202) 219–4066.

Dated: January 14, 1999.

Kevin Gover,

Assistant Secretary—Indian Affairs.

[FR Doc. 99–1925 Filed 1–27–99; 8:45 am]

BILLING CODE 4310–02–P

DEPARTMENT OF THE INTERIOR

Bureau of Indian Affairs

Indian Gaming

AGENCY: Bureau of Indian Affairs, Interior.

ACTION: Notice of amendment to approved Tribal-State Compact.

SUMMARY: Pursuant to section 11 of the Indian Gaming Regulatory Act of 1988, Pub. L. 100–497, 25 U.S.C. 2710, the Secretary of the Interior shall publish, in the **Federal Register**, notice of approved Tribal-State Compacts for the purpose of engaging in Class III (casino) gambling on Indian reservations. The Assistant Secretary—Indian Affairs, Department of the Interior, through his delegated authority, has approved the Fourth Amendment to the Tribal-State Compact for Class III Gaming between the Tulalip Tribes of Washington and the State of Washington, which was executed on November 25, 1998.

DATES: This action is effective January 28, 1999.

FOR FURTHER INFORMATION CONTACT: George T. Skibine, Director, Indian Gaming Management Staff, Bureau of Indian Affairs, Washington, DC 20240, (202) 219–4066.

Dated: January 14, 1999.

Kevin Gover,

Assistant Secretary—Indian Affairs.

[FR Doc. 99–1928 Filed 1–27–99; 8:45 am]

BILLING CODE 4310–02–P

DEPARTMENT OF THE INTERIOR

Bureau of Indian Affairs

Indian Gaming

AGENCY: Bureau of Indian Affairs, Interior.

ACTION: Notice of amendment to approved Tribal-State Compact.

SUMMARY: Pursuant to section 11 of the Indian Gaming Regulatory Act of 1988, Pub. L. 100–497, 25 U.S.C. 2710, the Secretary of the Interior shall publish, in the **Federal Register**, notice of approved Tribal-State Compacts for the purpose of engaging in Class III (casino) gambling on Indian reservations. The Assistant Secretary—Indian Affairs, Department of the Interior, through his delegated authority, has approved the Third Amendment to the Tribal-State Compact for Class III Gaming between the Upper Skagit Tribe and the State of Washington, which was executed on November 25, 1998.

DATES: This action is effective January 28, 1999.

FOR FURTHER INFORMATION CONTACT: George T. Skibine, Director, Indian Gaming Management Staff, Bureau of Indian Affairs, Washington, DC 20240, (202) 219–4066.

Dated: January 14, 1999.

Kevin Gover,

Assistant Secretary—Indian Affairs.

[FR Doc. 99–1931 Filed 1–27–99; 8:45 am]

BILLING CODE 4310–02–P

DEPARTMENT OF THE INTERIOR

Bureau of Indian Affairs

Indian Gaming

AGENCY: Bureau of Indian Affairs, Interior.

ACTION: Notice of amendment to approved Tribal-State Compact.

SUMMARY: Pursuant to section 11 of the Indian Gaming Regulatory Act of 1988, Pub. L. 100–497, 25 U.S.C. 2710, the Secretary of the Interior shall publish, in the **Federal Register**, notice of approved Tribal-State Compacts for the purpose of engaging in Class III (casino) gambling on Indian reservations. The Assistant Secretary—Indian Affairs, Department of the Interior, through his delegated authority, has approved the Amendment to the Tribal-State Compact for Class III Gaming between the Yakama Indian Nation and the State of Washington, which was executed on November 30, 1998.

DATES: This action is effective January 28, 1999.

FOR FURTHER INFORMATION CONTACT: George T. Skibine, Director, Indian Gaming Management Staff, Bureau of Indian Affairs, Washington, DC 20240, (202) 219–4066.

Dated: January 14, 1999.

Kevin Gover,

Assistant Secretary—Indian Affairs.

[FR Doc. 99–1934 Filed 1–27–99; 8:45 am]

BILLING CODE 4310–02–P

DEPARTMENT OF THE INTERIOR

Bureau of Land Management

[AZ–020–1220–00]

Closure of Public Lands to Camping and Off-Road Vehicle Use; Modification of Maximum Camping Stay Limit; and Exemption From Visitor Use Fees for Native Americans; Phoenix Field Office, Arizona

AGENCY: Bureau of Land Management, Interior.

ACTION: Notice of closure, modification of maximum camping stay limit, and fee exemption for Native Americans.

SUMMARY: This notice is to inform the public that the Bureau of Land Management (BLM) intends to close certain public lands in the Painted Rock Mountains in Maricopa County to camping and off-road vehicle use except designated/signed open roads. The closure will be year-round and will remain in effect until rescinded or modified by the Phoenix Field Office Manager. The public lands affected by this closure are specifically identified as follows:

All BLM administered lands in,

T. 4 S., R. 7 W.,
Sections 30, 31, 32.
T. 4 S., R. 8 W.,
Sections 13, 14, 24, 25,
T. 5 S., R. 7 W.,
Sections 5, 6, 7, 8, 17, 20.
T. 5 S., R. 8 W.,
Sections 1, 2, 3, 10, 11, 12.

The designated area will be posted with signs. This closure will go into effect upon completion of signing, approximately April 15, 1999.

The following persons, operating within the scope of their official duties, are exempt from the provisions of this closure: Employees of the BLM, Arizona Game and Fish Department, and local and federal law enforcement and fire protection personnel. Access by additional parties may be allowed, but must be approved in advance in writing by the Phoenix Field Office Manager.

This closure is in accordance with the provisions of the Federal Land Policy and Management Act of 1976 (43 USC 1701), and 43 CFR, Subpart 8364.1. Any person who fails to comply with the provisions of this closure may be subject to penalties outlined in 43 CFR Subpart 8360.0–7. In accordance with 43 CFR 8364.1 and Subpart 8365, a maximum camping stay of seven (7) months per party is established at designated sites within the limits of Petroglyph Campground, T. 5 S., R. 8 W, section 1, lot 4 and W½NW¼; and section 2, lots 1, 2, 5, 6, and NE¼. Persons may continuously occupy any one site during the period October 1 through April 30. During the period May 1 through September 30, the existing 14-day camping limit will remain in effect at Petroglyph Campground. On all other public lands administered by Phoenix Field Office, the existing 14-day camping limit, as published in the **Federal Register** Vol. 54, No. 215, November 8, 1989, will remain in effect year-round.

This closure and camping stay limit is being established to assist the BLM in reducing the incidence of unauthorized long-term occupancy on public lands, protect vegetation and soil resources, eliminate the potential for health hazards associated with indiscriminate dumping of litter and waste, and to address Native American concerns regarding proper etiquette by visitors to a petroglyph site.

Pursuant to the American Indian Religious Freedom Act of 1978, and Executive Orders 13007 and 13084, visitor use fees at Painted Rock Petroglyph Site and Campground will be waived upon request for Native Americans visiting the site for the purpose of engaging in activities of traditional cultural importance. Application for such waiver of fees may be obtained by contacting the Phoenix Field Office Manager. Applicants must demonstrate a tribal affiliation and identify the period of time during which the waiver will be used.

FOR FURTHER INFORMATION CONTACT: Michael A. Taylor, Field Manager, Phoenix Field Office, 2015 West Deer Valley Road, Phoenix, Arizona 85027; (602) 580–5500.

SUPPLEMENTARY INFORMATION: Petroglyph Campground has sanitation and other facilities adequate to support additional visitor use demands caused by the closure. Painted Rock Petroglyph Site is listed on the National Register of Historic Places and is recognized as a place of traditional cultural importance by the Tohono O'odham Nation and other Native American tribes. BLM cannot restrict access by other visitors to Painted Rock Petroglyph Site and Campground during such times that activities of traditional cultural importance may be undertaken.

Dated: January 22, 1999.

Michael A. Taylor,

Field Manager.

[FR Doc. 99–1990 Filed 1–27–99; 8:45 am]

BILLING CODE 4310–32–M

DEPARTMENT OF THE INTERIOR

Bureau of Land Management

[UT–930–07–1320–00]

Notice of Public Hearing and Call for Public Comment on the Environmental Impact Statement, Proposed Sale and Fair Market Value and Maximum Economic Recovery Consideration for Coal Lease Application UTU–76195

AGENCY: Bureau of Land Management, Utah.

SUMMARY: The Bureau of Land Management (BLM) announces a public hearing on the Environmental Impact

Statement, the proposed sale and requests public comment on the fair market value of certain coal resources it proposes to offer for competitive lease sale. The lands included in the delineated Federal coal lease tract (''The Pines'') are located in Sevier County, Utah, approximately 5 miles northwest of Emergy, Utah on public land located in the Manti-LaSal National Forest and are described as follows:

T. 20 S., R. 5 E., SLM
Section 35, S½NE¼, SE¼NW¼, NE¼SW¼, S½SW¼SE¼;
Section 36, W½SW¼, SE¼SW¼.
T. 21 S., R. 5E., SLM
Section 1, lots 3–4, S½SW¼, SW¼SE¼;
Section 2, lots 1–4, S½S½;
Section 3, lots 1–2, S½SE¼;
Section 10, E½;
Sections 11–14, all;
Section 15, E½;
Section 22, E½;
Sections 23–24, all;
Section 25, N½, N½S½;
Section 26, N½, NE¼SW¼, E½NW¼SW¼, SE¼.
T. 21 S., R. 6E., SLM
Section 19, lots 3–4 E½SW¼;
Section 30, lots 1–3, E½NW¼, NE¼SW¼.
Containing 7,311.43 acres more or less.

The Tract has one potentially minable coal seam, the Upper Hiawatha. The minable portions of the seam in this area are from 6 to 14 feet in thickness and average 10.9 feet. This tract contains an estimated 65–70 million tons of recoverable high-volatile C bituminous coal. The coal quality in the seam on an as received basis is as follows: 11,539 Btu/lb., 8.37 percent moisture, 8.78 percent ash, 36.87 percent volatile matter, 45.98 percent fixed carbon, and 0.5 percent sulfur. The public is invited to the hearing to make public or written comments on the environmental implications of leasing the proposed tract, and also to submit comments on the fair market value (FMV) and the maximum economic recovery (MER) of the tract.

SUPPLEMENTARY INFORMATION: In accordance with Federal coal management regulations 43 CFR 4322 and 4325, a public hearing shall be held on the proposed sale to allow public comment on and discussion of the potential effects of mining and proposed lease. Not less than 30 days prior to the publication of the notice of sale, the Secretary shall solicit public comments on fair market value appraisal and meximum economic recovery and on factors that may affect these two determinations. Proprietary data marked as confidential may be submitted to the Bureau of Land Management in response to this solicitation of public comments. Data so marked shall be treated in accordance with the laws and regulations governing the confidentiality of such information. A copy of the comments submitted by the public on fair market value and maximum economic recovery, except those portions identified as proprietary by the author and meeting exemptions stated in the Freedom of Information Act, will be available for public inspection at the Bureau of Land Management, Utah State Office during regular business hours (8:00 a.m. to 4:00 p.m.) Monday through Friday. Comments on fair market value and maximum economic recovery should be sent to the Bureau of Land Management and should address, but not necessarily be limited to, the following information:

1. The quality and quantity of the coal resource.
2. The mining method or methods which would achieve maximum economic recovery of the coal, including specifications of seams to be mined and the most desirable timing and rate of production.
3. The quantity of coal.
4. If this tract is likely to be mined as part of an existing mine and therefore be evaluated on a realistic incremental basis, in relation to the existing mine to which it has the greatest value.
5. If this tract should be evaluated as part of a potential larger mining unit and evaluated as a portion of a new potential mine (i.e., a tract which does not in itself form a logical mining unit).
6. The configuration of any larger mining unit of which the tract may be a part.
7. Restrictions to mining which may affect coal recovery.
8. The price that the mined coal would bring when sold.
9. Costs, including mining and reclamation, of producing the coal and the time of production.
10. The percentage rate at which anticipated income streams should be discounted, either in the absence of inflation or with inflation, in which case the anticipated rate of inflation should be given.
11. Depreciation and other tax accounting factors.
12. The value of any surface estate where held privately.
13. Documented information on the terms and conditions of recent and similar coal land transactions in the lease sale area.
14. Any comparable sales data of similar coal lands.

Coal quantities and the FMV of the coal developed by BLM may or may not change as a result of comments received from the public and changes in market conditions between now and when final economic evaluations are completed.

DATES: The public hearing will be held in the Salina City Hall located at 90 West Main Street in Salina, Utah, at 7:00 p.m. on March 3, 1999. Entrance to the building and parking is at the rear entrance. Written comments on fair market value and maximum economic recovery must be received at the Bureau of Land Management, Utah State Office, by March 17, 1999.

FOR FURTHER INFORMATION: Contact Max Nielson, 801–539–4038, Bureau of Land Management, Utah State Office, Division of Natural Resources, P.O. Box 45155, Salt Lake City, Utah, 84145–0155. Copies of an Environmental Impact Statement that considers leasing of this tract may be obtained by contacting Janette Kaiser, Forest Supervisor at the Manti-LaSal National Forest, 599 West Price River Dr. in Price, Utah (801–637–2817).

Dated: January 22, 1999.

Douglas M. Koza,

DSD, Natural Resources, Utah.

[FR Doc. 99–1989 Filed 1–27–99; 8:45 am]

BILLING CODE 4310–DQ–M

DEPARTMENT OF THE INTERIOR

Bureau of Land Management

[NM–070–09–1210–04]

Notice of Availability of Draft Environmental Impact Statement on Oil and Gas Development Within the Bisti/De-Na-Zin Wilderness Area

AGENCY: Bureau of Land Management, Interior.

ACTION: Notice of availability of Draft Environmental Impact Statement.

SUMMARY: The Bureau of Land Management (BLM), Farmington District Office has written a Draft Environmental Impact Statement (DEIS) on proposed oil and gas development of two existing leases within the Bisti/De-Na-Zin Wilderness Area. The DEIS analyzes three alternatives of a proposal by Speerex, Ltd. To drill thirteen wells on leases they have held since 1991.

Copies of the DEIS can be requested by writing the Bureau of Land Management, Farmington Field Office, 1235 La Plata Highway, Suite A, Farmington, NM 87401, or by calling the Farmington Field Office at (505) 599–8900. Individuals, organizations, or companies who had previously responsed to the Notice of Intent have been sent the DEIS and need not make a requisition.

DATES: Written comments on the DEIS will be accepted through the close of business April 30, 1999. Oral and/or written comments may also be presented at three public hearings to be held:

Albuquerque, NM, February 23, 1999, 7:00 p.m., Mountain View Holiday Inn, 2020 Menaul Blvd, NE

Santa Fe, NM, February 24, 1999, 7:00 p.m., Santa Fe Community College, 6401 Richards Ave.

Farmington, NM, February 25, 1999, 7:00 p.m., Jemez Room 1, San Juan College, 4601 College Blvd., Room 7103 (Computer Science Lecture Hall)

A Navajo translator will be available at the Farmington hearing.

ADDRESSES: Comments should be sent to: Lee Otteni, Field Manager; Bureau of Land Management, Farmington Field Office; 1235 La Plata Highway, Suite A, Farmington, New Mexico 87401. Proprietary data should be identified as such to ensure confidentiality.

FOR FURTHER INFORMATION CONTACT: Christopher V. Barns at the address above, or call 505–599–6338.

SUPPLEMENTARY INFORMATION: The existing leases are found in the upper portions of Hunter Wash drainage in the Bisti/De-Na-Zin Wilderness Area.

The Proposed Action would approve Applications for Permit to Drill (APD's) 13 oil and gas wells (5 Fruitland Coal wells and 8 Gallup wells) on two leases and grant 3 off-lease Rights-of-Way (ROW's) on Federal surface totalling 8,137 feet.

Alternative A would approve the APD's but deny the ROW's.

The No Action Alternative would deny both the APD's and ROW's.

There is no Preferred Alternative in the DEIS. The anticipated impacts to the environment by each alternative are analyzed both in terms of severity and duration. Various mitigative measures are outlined. Several alternatives that were considered but dropped from further consideration also are briefly discussed.

A Notice of Intent was filed in the **Federal Register** on January 27, 1998. Scoping meetings were held in Farmington, NM and Santa Fe, NM on February 24 and 25, 1998, respectively. Any comments presented throughout the process have been considered.

Dated: January 19, 1999.

Michelle Chávez,

State Director.

[FR Doc. 99–1988 Filed 1–27–99; 8:45 am]

BILLING CODE 4310–FB–M

DEPARTMENT OF THE INTERIOR

Bureau of Land Management

[WY–010–1610–00]

Notice of Availability

AGENCY: Bureau of Land Management, Interior.

ACTION: The Bureau of Land Management (BLM), Worland Field Office, Wyoming, announces: (1) The availability of the Record of Decision (ROD) for the Environmental Impact Statement (EIS) for the Grass Creek Resource Management Plan (RMP), (2) the approved Grass Creek RMP, and (3) notice of off-road vehicle designations for the Grass Creek Planning Area.

SUMMARY: The ROD documents the selection and approval of the Grass Creek RMP. The Grass Creek RMP provides multiple use management direction for approximately 968,000 acres of public land surface and 1,171,000 acres of Federal mineral estate administered by the BLM in portions of Big Horn, Hot Springs, Park, and Washakie counties in north central Wyoming.

The draft EIS for the Grass Creek RMP was made available for public review and comment in January 1995. Comments received on the draft EIS were considered in preparing the proposed Grass Creek RMP and final EIS which was made available for public review and protest in August 1996.

Planning and management decisions are presented in the Grass Creek RMP for all BLM-administered public land and resource values and uses within the planning area including air quality; cultural, paleontological, and natural history resources; fire; forestlands; hazardous materials and wastes; lands and realty; livestock grazing; minerals; off-road vehicle use; recreation; vegetation; visual resources; watershed; wild horses; wildlife and fish habitat; and areas of critical environmental concern. Since wilderness values are addressed in other documents, the Grass Creek RMP does not address them.

The Grass Creek RMP is a comprehensive land use plan providing for multiple use. It is a refinement of the preferred alternative presented in the draft EIS and the proposed RMP presented in the final EIS. While the intent and general content of the Grass Creek RMP are not different from the proposed RMP, comments from the public, review by BLM staff, and new information obtained since the distribution of the final EIS have prompted some wording clarifications in the RMP.

This **Federal Register** Notice serves as the notice for the Off-Road Vehicle (ORV) designations for the Grass Creek Planning Area as identified in the Grass Creek RMP. The ORV designations are described under **SUPPLEMENTARY INFORMATION** in this notice.

ADDRESSES: Information on the Grass Creek RMP may be obtained from the Worland Field Office, P.O. Box 119 (101 South 23rd Street), Worland, Wyoming 82401–0119, (307) 347–5100.

FOR FURTHER INFORMATION CONTACT: Bob Ross, Planning Coordinator, at the Worland Field Office, P.O. Box 119 (101 South 23rd Street), Worland, Wyoming 82401–0119, (307) 347–5100.

SUPPLEMENTARY INFORMATION: Thirteen protests were submitted to the Director of the Bureau of Land Management during the 30-day protest period for the Proposed Grass Creek RMP. Each protest letter was responded to and resolved by the Director. Resolution of the protests did not result in changes to any of the proposed land-use planning decisions.

The Grass Creek RMP includes the designation of the Upper Owl Creek Area of Critical Environmental Concern (ACEC) to protect fragile soils, alpine tundra, important wildlife habitat, and scenic values on approximately 16,300 acres of BLM-administered public lands. The management actions for the ACEC include limiting or prohibiting surface-disturbing activities and closing the area to, and pursuing withdrawal from, the staking and development of mining claims.

Three areas are designated special recreation management areas (SRMAs). These are the Absaroka Mountain Foothills (comprising about 68,000 acres of public land), Badlands (comprising about 208,600 acres of public land), and Bighorn River (comprising about 1,200 acres of public land). The remainder of the BLM-administered public lands in the planning area are designated an Extensive Recreation Management Area (ERMA).

In the course of conducting the planning effort and preparing the Grass Creek RMP, public lands along all waterways in the planning area were reviewed to determine their eligibility for inclusion in the National Wild and Scenic River System. No public lands were found to meet the eligibility criteria.

Management of wilderness values is not addressed in the Grass Creek RMP. The BLM's recommendations to the Secretary of the Interior on four Wilderness Study Areas (WSAs) in the Grass Creek Planning Area have been made under separate documentation. These areas were addressed in separate

wilderness EIS and wilderness report documents which are also on file in the Worland Field Office. The decisions regarding wilderness area designations are made by Congress. When Congress makes the wilderness decisions for the WSAs in the Grass Creek Planning Area, those decisions will be incorporated into the Grass Creek RMP.

The Grass Creek RMP includes the following Off-Road Vehicle (ORV) designations: areas open to off-road vehicle use, areas closed to off-road vehicle use, and areas with off-road vehicle use limited to designated roads and trails, limited seasonally, and limited to existing roads and trails. Maps of the ORV designations are on file in the Worland Field Office.

Specific designations are as follows: An open designation on approximately 900 acres west of Worland.

Closed designations on approximately 80 acres at the Duck Swamp-Bridger Trail Environmental Education Area and on approximately 900 acres at the Worland rifle range. In addition, public lands near the Sheep Mountain, Red Butte, Bobcat Draw Badlands, and Owl Creek wilderness study areas (about 52,460 acres) will be managed as closed to ORV use until activity planning specifically addresses ORV use in these areas.

Limited designations: Off-road vehicle use is limited to designated roads and trails and limited seasonally on about 68,000 acres of public land in the Absaroka Mountain foothills. Off-road vehicle use is limited to designated roads and trails on about 9,000 acres of public land in the Red Canyon Creek area south of Thermopolis. Off-road vehicle use in the Meeteetse Draw Rock Art area is limited to designated roads and trails on about 6,800 acres of public land. In the remainder of the planning area, ORV use on BLM-administered public land is limited to existing roads and trails.

Parties who are interested in and who wish to be involved in future activity planning and implementation of management actions that may involve or affect the resource values addressed in the Grass Creek RMP are requested to identify themselves. Please contact the Worland Field Office at the above address and request to be placed on a future contact list for activity planning and implementation activities concerning the Grass Creek RMP.

Dated: January 12, 1999.

Alan R. Pierson,

State Director.

[FR Doc. 99–1967 Filed 1–27–99; 8:45 am]

BILLING CODE 4310–22–P

DEPARTMENT OF THE INTERIOR

Bureau of Land Management

[NM–930–1020–00]

Availability of Draft Statewide Resource Management Plan Amendment/Draft Environmental Impact Statement, of Land Use Plans in New Mexico for Implementation of New Mexico Standards for Public Land Health and Guidelines for Livestock Grazing Management

AGENCY: Bureau of Land Management, New Mexico State Office.

ACTION: Notice of Availability, and Public Hearing Schedule.

SUMMARY: The Bureau of Land Management announces the availability for public review of the Draft Statewide Resource Management Plan Amendment/Draft Environmental Impact Statement, of Land Use Plans in New Mexico for Implementation of New Mexico Standards for Public Land Health and Guidelines for Livestock Grazing Management. The Draft Statewide Resource Management Plan Amendment/Draft Environmental Impact Statement addresses the effects of adopting statewide standards for public land health and guidelines for livestock grazing on BLM administered lands in New Mexico. When adopted the standards and guidelines would be incorporated into eight BLM land use plans that cover approximately 13.5 million acres of BLM-administered land. This action is proposed in accordance with revised regulations for livestock grazing on BLM-administered lands (43 CFR 4100). Notice also is given that public hearings will be held to seek public comment on the adequacy of the Draft Statewide Resource Management Plan Amendment/Draft Environmental Impact Statement, including alternatives and the impacts of those alternatives.

DATES: Twelve public hearings have been scheduled. All hearings will have an afternoon and an evening session. The afternoon hearing will begin at 2:00 p.m. and continue until those signed up to speak have done so or until 5:00 p.m., at which time there will be a dinner recess. After a break for dinner the hearing will reconvene at 7:00 p.m. for the evening hearing and run until those signed up to speak have had an opportunity to do so. Both oral and written testimony will be accepted at the hearings. A 5-minute time limit will be placed on oral comments, which should be accompanied by a written synopsis of the presentation. Written and oral comments will be equally evaluated in full and considered in the preparation of the Proposed Resource Management Plan Amendment/Final Environmental Impact Statement.

Hearings are scheduled for the following locations and dates:

March 08, 1999—Crownpoint Institute of Technology, Crownpoint, NM.

March 09, 1999—Civic Center located at 200 West Arrington, Farmington, NM.

March 10, 1999—Cuba High School, 50 County Road 13, Cuba, NM.

March 11, 1999—Lucero Center in the Espanola Plaza, Espanola, NM.

March 15, 1999—Holiday Inn at Paseo Del Pueblo Sur, Taos, NM.

March 16, 1999—BLM Office, 2nd Floor Conference Room, 1474 Rodeo Rd., Santa Fe, NM.

March 17, 1999—BLM Office, Conference Room, 1800 Marquess St., Las Cruces, NM.

March 18, 1999—110 South Diamond, Deming, NM.

March 22, 1999—BLM Office, Conference Room, 435 Montano NE, Albuquerque, NM.

March 23, 1999—Otero County Courthouse, Commission Chambers, Room 253, 1000 New York Ave., Alamogordo, NM.

March 24, 1999—Carlsbad Public Library Annex at 101 St. Halagueno, Carlsbad, NM.

March 25, 1999—NM Military Institute, Toles Learning Center, Maybee Room, 101 W College, Roswell, NM.

Oral and written testimony will be accepted at the hearings.

ADDRESSES: Written comments on the document must be postmarked on or before May 17, 1999 (closing date for public comments) and should be addressed to: J.W. Whitney, BLM Project Team Leader, Bureau of Land Management, New Mexico State Office, P.O. Box 27115, Santa Fe, NM 87502–7115, telephone: 505–438–7438. Copies of the Draft Statewide Resource Management Plan Amendment/Draft Environmental Impact Statement are available at BLM field offices in Farmingtom, Taos, Albuquerque, Socorro, Las Cruces, Roswell and Carlsbad. The BLM and State have also requested County Managers to make individual copies available for review at each County Manager's Office throughout the State of New Mexico.

FOR FURTHER INFORMATION CONTACT: J.W. Whitney, BLM Project Leader, BLM, New Mexico State Office, P.O. Box 27115, Santa Fe, NM 87502–7115.

SUPPLEMENTARY INFORMATION: Comments, including names and addresses of respondents, will be available for public review at the above address during regular business hours

(8:00 a.m. to 5:00 p.m.) Monday through Friday, except holidays, and may be published as part of the Proposed Statewide Resource Management Plan Amendment/Final Environmental Impact Statement. Individual respondents may request confidentiality. If you wish to withhold your name or street address from public review or from disclosure under the Freedom of Information Act, you must state this prominently at the beginning of your written comment. Such requests will be honored to the extent allowed by law. All submissions from organizations or businesses, and from individuals identifying themselves as representatives or officials of organizations or business, will be made available for public inspection in their entirety. Four alternatives are considered in detail in the Draft Statewide Resource Management Plan Amendment/Draft Environmental Impact Statement. The no action alternative (continuation of current management) provides a baseline for comparison with other alternatives. The proposed action (RAC alternative) is to incorporate statewide standards and guidelines into affected land use plans. The proposed action is also the BLM preferred alternative. The county alternative is to adopt and implement county developed standards and guidelines into affected land use plans. The fallback alternative is to adopt and implement standards and guidelines defined in BLM's grazing regulations into affected land use plans.

Dated: January 21, 1999.

Richard A. Whitley,

Associate State Director.

[FR Doc. 99–2013 Filed 1–27–99; 8:45 am]

BILLING CODE 4310–FB–M

DEPARTMENT OF THE INTERIOR

Minerals Management Service

Environmental Documents Prepared for Proposed Oil and Gas Operations on the Gulf of Mexico Outer Continental Shelf (OCS)

AGENCY: Minerals Management Service, Interior.

ACTION: Notice of the Availability of Environmental Documents Prepared for OCS Mineral Proposals on the Gulf of Mexico OCS.

SUMMARY: The Minerals Management Service (MMS), in accordance with Federal Regulations (40 CFR 1501.4 and § 1506.6) that implement the National Environmental Policy Act (NEPA), announces the availability of NEPA-related Site-Specific Environmental Assessments (SEA's) and Findings of No Significant Impact (FONSI's), prepared by MMS for the following oil and gas activities proposed on the Gulf of Mexico OCS. This listing includes all proposals for which the FONSI's were prepared by the Gulf of Mexico OCS Region in the period subsequent to publication of the preceding notice.

Activity/operator	Location	Date
Conoco, Inc., Exploration Activity, SEA No. N–6213.	Atwater Valley Area, Blocks 155 and 156, Leases OCS–G 18504 and 18505, 82 miles south-southeast of Plaquemines Parish, Louisiana.	10/20/98
Coastal Oil & Gas Corporation, Development Activity, SEA No. N–6250A.	High Island Area, East Addition, South Extension, Blocks A–368 and A–373, Leases OCS–G 2433 and 18970, 119 miles south of the Texas coast.	12/17/98
BP Exploration Inc., Exploration Activity, SEA No. N–6263.	Green Canyon Area, Blocks 644 and 645, Leases OCS–G 11080 and 11081, 119 miles south of Terrebonne Parish, Louisiana.	10/15/98
Coastal Oil & Gas Corporation, Exploration Activity, SEA No. S–4793U.	High Island Area, East Addition, South Extension, Block A–368, Lease OCS–G 2433, 119 miles south of the Texas coast.	12/03/98
Vastar Resources, Inc., Structure Removal Operations, SEA No. ES/SR 98–013A.	South Marsh Island Area, Block 24, Lease OCS–G 14437, 46 miles south of Vermilion Parish, Louisiana.	12/27/98
Forest Oil Corporation, Structure Removal Operations, SEA No. ES/SR 98–078A.	Eugene Island Area, Block 307, Lease OCS–G 1980, 67 miles southwest of Terrebonne Parish, Louisiana.	11/13/98
IP Petroleum Company, Inc., Structure Removal Operations, SEA No. ES/SR 98–082.	High Island Area, Block 68, Lease OCS–G 15771, 15 miles from the Texas coastline.	12/11/98
EEX Corporation, Structure Removal Operations, SEA No. ES/SR 99–01.	West Cameron Area, Block 406, Lease OCS–G 11789, 70 miles from the Texas Coast.	12/11/98
Chevron U.S.A., Structure Removal Operations, SEA No. ES/SR 99–02.	West Cameron Area, Block 48, Lease OCS–G 1351, 8 miles south of Cameron, Louisiana.	11/03/98
Seneca Resources Corporation, Structure Removal Operations, SEA No. ES/SR 99–03.	West Delta Area, Block 17, Lease OCS–G 5668, 10 miles south of Lafourche Parish, Louisiana.	12/03/98
Murphy E&P Company, Structure Removal Operations, SEA No. ES/SR 99–04.	South Pelto Area, Block 20, Lease OCS 074, 12 miles from the coast of Louisiana.	12/17/98

Persons interested in reviewing environmental documents for the proposals listed above or obtaining information about EA's and FONSI's prepared for activities on the Gulf of Mexico OCS are encouraged to contact the MMS office in the Gulf of Mexico OCS Region.

FOR FURTHER INFORMATION CONTACT: Public Information, Unit, Information Services Section, Gulf of Mexico OCS Region, Minerals Management Service, 1201 Elmwood Park Boulevard, New Orleans, Louisiana 70123–2394, telephone (504) 736–2519.

SUPPLEMENTARY INFORMATION: The MMS prepares EA's and FONSI's for proposals which relate to exploration for and the development/production of oil and gas resources on the Gulf of Mexico OCS. The EA's examine the potential environmental effects of activities described in the proposals and present MMS conclusions regarding the significance of those effects. Environmental Assessments are used as a basis for determining whether or not approval of the proposals constitutes major Federal actions that significantly affect the quality of the human environment in the sense of NEPA Section 102(2)(C). A FONSI is prepared in those instances where the MMS finds that approval will not result in significant effects on the quality of the human environment. The FONSI briefly presents the basis for that finding and includes a summary or copy of the EA.

This notice constitutes the public notice of availability of environmental

documents required under the NEPA Regulations.

Dated: January 21, 1999.

Chris C. Oynes,

Regional Director, Gulf of Mexico OCS Region.

[FR Doc. 99–1975 Filed 1–27–99; 8:45 am]

BILLING CODE 4310–MR–M

INTERNATIONAL TRADE COMMISSION

Agency Information Collection Activities; Proposed Collection; Comment Request

AGENCY: U.S. International Trade Commission.

ACTION: Notice of proposed collection; comment request.

SUMMARY: The proposed information collection is a 3-year extension, pursuant to the Paperwork Reduction Act of 1995 (P.L. 104–13), of the current ''generic clearance'' (approved by the Office of Management and Budget under control No. 3117–0016) under which the Commission can issue information collections (specifically, producer, importer, purchaser, and foreign producer questionnaires and certain institution notices) for the following types of import injury investigations: countervailing duty, antidumping, escape clause, market disruption, NAFTA safeguard, and ''interference with programs of the USDA.'' Comments concerning the proposed information collections are requested in accordance with 5 CFR 1320.8(d); such comments are described in greater detail in the section of this notice entitled supplementary information.

DATES: To be assured of consideration, written comments must be received not later than March 26, 1999.

ADDRESSES: Signed comments should be submitted to Donna Koehnke, Secretary, U.S. International Trade Commission, 500 E Street SW., Washington, D.C. 20436.

FOR FURTHER INFORMATION CONTACT: Copies of the proposed information collections (and related instructions) and draft Paperwork Reduction Act Submission and Supporting Statement to be submitted to the Office of Management and Budget may be obtained from either of the following persons: Debra Baker, Office of Investigations, U.S. International Trade Commission, telephone 202–205–3180, or Lynn Featherstone, Director, Office of Investigations, U.S. International Trade Commission, telephone 202–205–3160. The draft Supporting Statement is also on the Commission's website (http://www.usitc.gov).

SUPPLEMENTARY INFORMATION:

Request for Comments

Comments are solicited as to (1) whether the proposed information collection is necessary for the proper performance of the functions of the agency, including whether the information will have practical utility; (2) the accuracy of the agency's estimate of the burden of the proposed information collection, including the validity of the methodology and assumptions used; (3) the quality, utility, and clarity of the information to be collected; and (4) minimization of the burden of the proposed information collection on those who are to respond (including through the use of appropriate automated, electronic, mechanical, or other technological forms of information technology, e.g., permitting electronic submission of responses).

Summary of the Proposed Information Collections

(1) Need for the Proposed Information Collections

The Commission conducts countervailing duty and antidumping investigations under provisions of Title VII of the Tariff Act of 1930 to determine whether domestic industries are being materially injured or threatened with material injury by reason of imports of products which are subsidized (countervailing duty cases) or sold at less than fair value (antidumping cases). Five-year reviews of antidumping and countervailing duty orders and suspended investigations are conducted to determine whether revocation of the existing orders would be likely to lead to continuation or recurrence of material injury to the domestic industry. The Commission conducts escape-clause investigations to determine whether increased imports are a substantial cause of serious injury or threat of serious injury to a domestic industry. NAFTA safeguard investigations are conducted under the authority of the North American Free Trade Agreement and examine whether increased imports from Canada or Mexico are a substantial cause of serious injury or threat of serious injury to a domestic industry. Market disruption investigations are conducted to determine whether imports of an article produced in a Communist country are causing material injury to a domestic industry. The Commission also conducts investigations to determine whether imports are interfering with programs of the Department of Agriculture for agricultural commodities or products. Specific investigations are almost always instituted in response to petitions received from U.S. manufacturers of the product(s) in question. Data received in response to the questionnaires (specifically, producer, importer, purchaser, and foreign producer questionnaires) issued under the terms of the proposed generic clearance are consolidated and form much of the statistical base for the Commission's determinations in these statutorily-mandated investigations.

Included in the proposed generic clearance are the institution notices for the five-year reviews of antidumping and countervailing duty orders and suspended investigations. Responses to the institution notices will be evaluated by the Commission and form much of the record for its determination to conduct either an expedited or full review.

(2) Information Collection Plan

Using the sample ''generic clearance'' questionnaires as a guide, questionnaires for specific investigations are prepared and are sent to U.S. producers manufacturing the product(s) in question and to all significant importers of the products, except in cases involving an unusually large number of firms. In these instances, questionnaires are sent to a representative sample of firms. Purchaser questionnaires are also sent to all significant purchasers of the product(s). Finally, all foreign manufacturers of the product(s) in question that are represented by counsel are sent questionnaires, and, in addition, the Commission attempts to contact any other foreign manufacturers, especially if they export the product(s) in question to the United States. Firms receiving questionnaires include businesses, farms, and/or other for-profit institutions; responses are mandatory.

The institution notices for the five-year reviews are published in the **Federal Register** and solicit comment from interested parties (i.e., U.S. producers within the industry in question as well as labor unions or representative groups of workers, U.S. importers and foreign exporters, and involved foreign country governments).

(3) Description of the Information to be Collected

Producer questionnaires generally consist of the following four parts: (part I) general questions relating to the organization and activities of the firm; (part II) data on capacity, production,

inventories, employment, and the quantity and value of the firm's shipments and purchases from various sources; (part III) financial data, including income-and-loss data on the production in question, data on asset valuation, research and development expenses, and capital expenditures; and (part IV) pricing and market factors. (Questionnaires may, on occasion, also contain part V, an abbreviated version of the above-listed parts, used for gathering data on additional product categories.)

Importer questionnaires generally consist of three parts: (part I) general questions relating to the organization and activities of the firm; (part II) data on the firm's imports and the shipment and inventories of its imports; and (part III) pricing and market factors similar to that requested in the producer questionnaire.

Purchaser questionnaires generally consist of five parts: (part I) general questions relating to the organization and activities of the firm; (part II) data concerning the purchases of the product by the firm; (part III) market characteristics and purchasing practices; (part IV) comparisons between imported and U.S.-produced product; and (part V) actual purchase prices for specific types of domestic and subject imported products and the names of the firm's vendors.

Foreign producer questionnaires generally consist of (part I) general questions relating to the organization and activities of the firm; (part II) data concerning the firm's manufacturing operations; and set reviews include 11 specific requests for information that firms are to provide if their response is to be considered by the Commission.

The notices of institution for the five-year reviews include 11 specific requests for information that firms are to provide if their response is to be considered by the Commission.

The Commission solicits input from petitioners and other potential recipients when preparing questionnaires for individual investigations. Further, the Commission has formalized the process where interested parties comment on data collection and draft questionnaires in final phase countervailing duty and antidumping investigations (including the 5-year reviews). Interested parties are provided approximately 2 weeks to provide comments to the Commission on the draft questionnaires. All efforts are made to minimize burden to the firms that will be receiving the questionnaires.

(4) Estimated Burden of the Proposed Information Collection

The Commission estimates that information collections issued under the requested generic clearance will impose an average annual burden of 105,000 response hours on 2,600 respondents (i.e., recipients that provide a response to the Commission's questionnaires or the notices of institution of five-year reviews). Table 1 lists the projected annual burden for each type of information collection for the period July 1999 through June 2002:

TABLE 1.—PROJECTED ANNUAL BURDEN DATA, BY TYPE OF INFORMATION COLLECTION, JULY 1999–JUNE 2002

Item	Producer questionnaires [1]	Importer questionnaires [2]	Purchaser questionnaires [3]	Foreign producer questionnaires [4]	Institution notices for 5-year reviews [5]	Total
	Estimated burden hours imposed annually for July 1999–June 2002					
Number of respondents	890	871	575	208	86	2,630
Frequency of response	1	1	1	1	1	1
Total annual responses	890	871	575	208	86	2,630
Hours per response	52.6	44.1	23.2	28.0	7.4	39.9
Total hours	46,825	38,426	13,335	5,832	636	105,054

[1] *Producer questionnaires.*—Estimates based upon the following variables: number of respondents (anticipated caseload (×) number of producer respondents per case) and hours per response (responding firm burden (+) outside review burden (+) third-party disclosure burden). See definitions below. Responding firm burden accounts for 91 percent of the total producer questionnaire burden (48.1 hours per response), outside review burden accounts for 6 percent of the total burden, and third-party disclosure burden accounts for the remaining 3 percent. (The averages per questionnaire of the outside review and third-party disclosure burdens are not listed here since they are incurred only for the questionnaires of interested parties; such averages for all questionnaires are not meaningful.)

[2] *Importer questionnaires.*—Estimates based upon the following variables: number of respondents (anticipated caseload (×) number of importer respondents per case) and hours per response (responding firm burden (+) outside review burden (+) third-party disclosure burden). See definitions below. Responding firm burden accounts for 98 percent of the total importer questionnaire burden (43.3 hours per response), outside review burden and third-party disclosure burden each account for about 1 percent of the total burden. (The averages per questionnaire of the outside review and third-party disclosure burdens are not listed here since they are incurred only for the questionnaires of interested parties; such averages for all questionnaires are not meaningful.)

[3] *Purchaser questionnaires.*—Estimates based upon the following variables: number of respondents (anticipated caseload (×) number of purchaser respondents per case) and hours per response (responding firm burden). See definitions below. Purchasers are not interested parties to investigations by statute and rarely engage outside counsel. Therefore, there is no measurable outside review burden nor third-party disclosure burden for purchasers.

[4] *Foreign producer questionnaires.*—Estimates based upon the following variables: number of respondents (anticipated caseload (×) number of foreign producer respondents per case) and hours per response (responding firm burden (+) outside review burden (+) third-party disclosure burden). See definitions below. Responding firm burden accounts for 34 percent of the total foreign producer questionnaire burden (9.6 hours per response), outside review burden accounts for another 34 percent, and third-party disclosure burden accounts for 32 percent of the total burden.

[5] *Institution notices for 5-year reviews.*—Estimates based upon the following variables: anticipated 5-year review caseload, number of respondents to each notice, and responding firm burden. The Commission based its estimate of the number of respondents upon the number of responses per review received to date. Responding firm burden is estimated based on a comparison of the amount of information contained in notices received to date to completed producer questionnaires.

Note.—Above estimates include questionnaires for specific investigations where the mailing list consists of fewer than 10 firms. In such instances the majority or all firms within the industry under investigation may be said to receive questionnaires. According to the Paperwork Reduction Act of 1995, ''(a)ny collection of information addressed to all or a substantial majority of an industry is presumed to involve ten or more persons.''

Definitions and Methodology

Anticipated caseload.—Derived from current Commission budget estimates.

Number of respondents per case.—Defined as the number of firms which return *completed* (see note 2 to table 3) questionnaires to the Commission. Current estimates of ''number of respondents per case'' for the producer,

importer, and purchaser questionnaires were derived, in part, from the number of respondents to Commission questionnaires that were issued in FY1996–98. Averaged to that is the estimated number of respondents for questionnaires to be issued to 9 or fewer firms. Data for these mailings were not collected during FY1996–98 and Commission staff estimates that 4 respondents per mailing return such questionnaires. Similarly, foreign producer questionnaires are typically sent to 9 or fewer firms and Commission staff again used an estimate of 4 respondents per mailing for foreign producer questionnaires.

Responding firm burden.—Defined as the time required by the firm which received the questionnaire to review instructions, search data sources, and complete and review its response. Commission questionnaires do not impose the burden of developing, acquiring, installing and utilizing technology and systems, nor require adjusting existing methodology or training personnel. Current estimates of ''responding firm burden'' for the producer, importer, and purchaser questionnaires were derived from the actual burden reported by firms that responded to Commission questionnaires issued in FY1996–98. Current estimates of ''respondent firm burden'' for the foreign producer questionnaires was estimated by Commission staff based upon its review of previously returned questionnaires.

Outside review burden.—Time devoted by outside legal and financial advisors to reviewing questionnaires completed by the responding firms who are their clients prior to submitting them to the Commission. Commission staff conducted a survey of fewer than 10 law firms which have appeared before the Commission to derive a ''petitioner'' review burden estimate per party questionnaire and a ''respondent'' review burden estimate. Staff also reviewed a number of past investigations (33) to determine the average number of ''parties'' (i.e., respondent interested parties who were represented by outside counsel) per investigation and calculated the total number of review burden hours that would be incurred annually. The ''petitioner/producer'' review burden was applied to the producer questionnaire burden figures and the ''respondent'' review burden was divided among the importer and foreign producer questionnaires.

Third party disclosure burden.—Time required for outside legal advisors to serve their clients' questionnaires on other interested parties to the investigation or review under an administrative protective order. Commission staff included in its survey of law firms a request for the average third party disclosure burden and using the same methodology described above for outside review burden applied the third party disclosure burden to the hours per response figures for the producer, importer, and foreign producer questionnaires.

The Commission further estimates that it costs responding firms $65.30 per burden hour to complete a specific questionnaire issued under the generic clearance. (This estimate is based upon actual costs reported by respondents to questionnaires issued under the current generic clearance.) More complete information concerning costs to respondents, including costs incurred for the purchase of services, and estimates of the annualized cost to the Commission are presented in the draft Supporting Statement available from the Commission. There is no known capital and start-up cost component imposed by the proposed information collections.

(5) Information Technology

The Commission's collection of data through its questionnaires does not currently involve the use of automated, electronic, mechanical, or other technological collection techniques or other forms of information technology. Completed questionnaires are almost always returned to the Commission in paper-form. While the Commission has explored the use of alternative methods of submission, it has proved most expedient to receive paper copies for a number of reasons. (The draft Supporting Statement available from the Commission addresses this issue in greater detail.) However, while there are certain impediments to the easy *receipt* of data in electronic form, the Commission will, and has in the past, accept electronic submissions when large amounts of ''repetitive'' data are being requested. Further, the Commission will make the questionnaires available to firms in electronic format to aid respondents. Likewise, it is the Commission's experience that it is most expedient that the information provided in response to its notices of institution for the five-year reviews be submitted in document form directly to its Office of the Secretary.

Issued: January 25, 1999.

By order of the Commission.

Donna R. Koehnke,

Secretary.

[FR Doc. 99–2045 Filed 1–27–99; 8:45 am]

BILLING CODE 7020–02–P

DEPARTMENT OF JUSTICE

Notice of Lodging of Consent Decree Pursuant to the Comprehensive Environmental Response, Compensation, and Liability Act of 1980, as Amended

Consistent with Departmental policy, 28 CFR 50.7, notice is hereby given that on January 13, 1999, a proposed consent decree in *United States* v. *Vermont American Corporation,* Civil Action No. 2:99–CV–9, was lodged with the United States District Court for the District of Vermont. This proposed consent decree resolves the United States' claims under the Comprehensive Environmental Response, Compensation, and Liability Act (''CERCLA''), 42 U.S.C. 9601 *et seq.*, on behalf of the U.S. Environmental Protection Agency (''EPA'') against Vermont American Corporation relating to certain response costs that have been or will be incurred at or from a Site known as the Parker Landfill Superfund Site (''Site'') located in the Town of Lyndon, Vermont.

The consent decree requires the defendant to pay $350,000 to the United States, $150,000 to the parties constructing the cap at the Site, waive its claims against municipalities that disposed of municipal solid waste at the Site and withdraw its adverse comments to an earlier consent decree.

The Department of Justice will receive for a period of thirty (30) days from the date of this publication comments relating to the proposed consent decree. Any comments should be addressed to the Assistant Attorney General of the Environment and Natural Resources Division, Department of Justice, Washington, DC 20530, and should refer to *United States* v. *Vermont American Corporation,* D.J. Ref. 90–11–2–1120A.

The proposed consent decree may be examined at the Office of the United States Attorney, 11 Elmwood Ave., Burlington, Vt. 05401, at the Region I office of the Environmental Protection Agency, JFK Federal Building, Boston, MA., 02203–2211, and at the Consent Decree Library, 1120 G Street, NW, 3rd Floor, Washington, DC 20005 (202) 624–0892. A copy of the proposed consent decree may be obtained in person or by mail from the Consent Decree Library, 1120 G Street, NW, 3rd Floor, Washington, DC 20005. In requesting a copy, please enclose a check (there is a 25 cent per page reproduction cost) in

the amount of $7.00 payable to the Consent Decree Library.

Joel Gross,

Chief, Environmental Enforcement Section, Environment and Natural Resources Division.

[FR Doc. 99–2033 Filed 1–27–99; 8:45 am]

BILLING CODE 4410–15–M

DEPARTMENT OF JUSTICE

Antitrust Division

Notice Pursuant to the National Cooperative Research and Production Act of 1993—The Asymmetrical Digital Subscriber Line Forum

Notice is hereby given that, on March 20, 1998, pursuant to section 6(a) of the National Cooperative Research and Production Act of 1993, 15 U.S.C. 4301 *et seq.* (''the Act''), the Asymmetrical Digital Subscriber Line Forum (''ADSL'') has filed written notifications simultaneously with the Attorney General and the Federal Trade Commission disclosing changes in its membership status. The notifications were filed for the purpose of extending the Act's provisions limiting the recovery of antitrust plaintiffs to actual damages under specified circumstances. Specifically, Accelerated Networks, Westlake Village, CA; Advanced Hardware Architectures, Pullman, WA; Advanced Micro Devices, Sunnyvale, CA; Aware, Bedford, MA; Atlas Communication Engines, Inc., Santa Barbara, CA; Bell Canada, Montreal, Quebec, CANADA; Bellcore, Morristown, NJ; Bosch Telecom, Backnang, Baden-Wuerttenberg, GERMANY; Broadband Technologies, Research Triangle Park, NC; Cable & Wireless, London, ENGLAND; CopperCom, Cupertino, CA; Diamond Multimedia, St. Ingbert, Saarland, GERMANY; Fluke Corporation, Everett, WA; General Signal Networks, Westford, MA; Globaloop, Kfar Sava, ISRAEL; FORE Systems, Warrendale, PA; Harris Corporation, Melbourne, FL; Intel, Santa Clara, CA; Interspeed, Lawrence, MA; Jetstream, San Jose, CA; MCI Telecommunications, Richardson, TX; New Information Technologies, Inc. (NITECH), Freehold, NJ; PMC-Sierra, Burnaby, British Columbia, CANADA; Philips Multimedia & Network Systems GmbH, Bautzen, GERMANY; Pulse, San Diego, CA; OKI America, Merrifield, VA; Robertson, Stephens & Co., San Francisco, CA; RouterWare, Newport Beach, CA; Shasta Networks, Menlo Park, CA; Siecor, Keller, TX; Sprint, Westwood, KS; Starnet, San Jose, CA; TTC, Germantown, MD; Tele Danmark, Aarhus, DENMARK; Tollgrade, Cheswick, PA; Tut Systems, Pleasant Hill, CA; Transwitch, Shelton, CT; and VTT Electronics, Oulu, FINLAND have been added as parties to this venture. SMC, Irvine, CA has changed its name to Escalate Networks, Irvine, CA. SouthWestern Bell, Austin, TX has changed its name to SBC Technology Resources, Austin, TX. Ericsson Austria AG, Vienna, AUSTRIA has changed its name to LM Ericsson, Vienna, AUSTRIA.

Amati, San Jose, CA has merged with Texas Instruments, Dallas, TX.

Also, Sourcecom, Santa Clarita, CA; and Interphase, Dallas, TX have been dropped as parties to this venture.

No other changes have been made in either the membership or planned activity of the group research project. Membership in this group research project remains open, and ADSL intends to file additional written notifications disclosing all changes in membership.

On May 15, 1995, ADSL filed its original notification pursuant to section 6(a) of the Act. The Department of Justice published a notice in the **Federal Register** pursuant to section 6(b) of the Act on July 25, 1995 (60 FR 38058).

The last notification was filed with the Department on December 16, 1997. A notice was published in the **Federal Register** pursuant to section 69b) of the Act on April 8, 1998 (63 FR 17214).

Constance K. Robinson,

Director of Operations, Antitrust Division.

[FR Doc. 99–2035 Filed 1–27–99; 8:45 am]

BILLING CODE 4410–11–M

DEPARTMENT OF JUSTICE

Antitrust Division

Notice Pursuant to the National Cooperative Research and Production Act of 1993—Cable Television Laboratories, Inc. (''CableLabs'')

Notice is hereby given that, on May 5, 1998, pursuant to section 6(a) of the National Cooperative Research and Production Act of 1993, 15 U.S.C. 4301 *et seq.* (''the Act''), Cable Television Laboratories, Inc. (''CableLabs'') has filed written notifications simultaneously with the Attorney General and the Federal Trade Commission disclosing changes in its membership status. The notifications were filed for the purpose of extending the Act's provisions limiting the recovery of antitrust plaintiffs to actual damages under specified circumstances. Specifically, Monarch Cablesystems Ltd., Medicine Hat, Alberta, CANADA; and TV Cable Bogota, Bogota, COLUMBIA have been added as parties to this venture.

No other changes have been made in either the membership or planned activity of the group research project. Membership in this group research project remains open, and Cable Television Laboratories, Inc. (''CableLabs'') intends to file additional written notification disclosing all changes in membership.

On August 8, 1988, Cable Television Laboratories, Inc. (''CableLabs'') filed its original notification pursuant to section 6(a) of the Act. The Department of Justice published a notice in the **Federal Register** pursuant to section 6(b) of the Act on September 7, 1988 (53 FR 34593).

The last notification was filed with the Department on January 30, 1998. A notice has not yet been published in the **Federal Register.**

Constance K. Robinson,

Director of Operations, Antitrust Division.

[FR Doc. 99–2040 Filed 1–27–99; 8:45 am]

BILLING CODE 4410–11–M

DEPARTMENT OF JUSTICE

Antitrust Division

Notice Pursuant To the National Cooperative Research and Production Act of 1993—Cable Television Laboratories, Inc. (''CableLabs'')

Notice is hereby given that, on January 30, 1998, pursuant to section 6(a) of the National Cooperative Research and Production Act of 1993, 15 U.S.C. 4301 *et seq.* (''the Act''), Cable Television Laboratories, Inc. (''CableLabs'') has filed written notifications simultaneously with the Attorney General and the Federal Trade Commission disclosing changes in its membership status. The notifications were filed for the purpose of extending the Act's provisions limiting the recovery of antitrust plaintiffs to actual damages under specified circumstances. Specifically, Globocabo S.A., Sao Paolo, BRAZIL; and Seaview Communications, Maple Ridge, British Columbia, CANADA have been added as parties to this venture.

No other changes have been made in either the membership or planned activity of the group research project. Membership in this group research project remains open, and Cable Television Laboratories, Inc. (''CableLabs'') intends to file additional written notification disclosing all changes in membership.

On August 8, 1988, Cable Television Laboratories, Inc. (''CableLabs'') filed its

original notification pursuant to section 6(a) of the Act. The Department of Justice published a notice in the **Federal Register** pursuant to section 6(b) of the Act on September 7, 1988 (53 FR 34593).

The last notification was filed with the Department on November 3, 1997. A notice was published in the **Federal Register** pursuant to section 6(b) of the Act on March 19, 1998 (63 FR 13432).

Constance K. Robinson,

Director of Operations, Antitrust Division.

[FR Doc. 99–2041 Filed 1–27–99; 8:45 am]

BILLING CODE 4410–11–M

DEPARTMENT OF JUSTICE

Antitrust Division

Notice Pursuant to the National Cooperative Research and Production Act of 1993—Oil Industry Consortium for Nuclear Modeling Technology

Notice is hereby given that, on November 30, 1998, pursuant to section 6(a) of the National Cooperative Research and Production Act of 1993, 15 U.S.C. 4301 *et seq.* (''the Act''), Oil Industry Consortium for Nuclear Modeling Technology has filed written notifications simultaneously with the Attorney General and the Federal Trade Commission disclosing (1) the identities of the parties and (2) the nature and objectives of the venture. The notifications were filed for the purpose of invoking the Act's provisions limiting the recovery of antitrust plaintiffs to actual damages under specified circumstances. Pursuant to section 6(b) of the Act, the identities of the parties are Chevron Petroleum Technology Company, La Habra, CA; Halliburton Energy Services, Houston, TX; Schlumberger-Doll Research, Ridgefield, CT; Sperry-Sun Drilling Services, Houston, TX; and Western Atlas Logging Services, Houston, TX. The nature and objectives of the venture are to develop advanced nuclear modeling techniques for the oil industry.

Participation in this program will remain open to all interested persons and organizations until the Project Completion Date, which is anticipated to occur no later than August 21, 2001.

The Participants intend to file additional written notification disclosing all changes in membership. Information regarding participation in the program may be obtained from Dr. Ahmed Badruzzaman, Chevron Petroleum Technology Company, 1300 Beach Blvd. #5–5238, La Habra, CA 90631–6374, Telephone (562) 694–7204, Fax (562) 694–7228.

Constance K. Robinson,

Director of Operations, Antitrust Division.

[FR Doc. 99–2034 Filed 1–27–99; 8:45 am]

BILLING CODE 4410–11–M

DEPARTMENT OF JUSTICE

Antitrust Division

Notice Pursuant to the National Cooperative Research and Production Act of 1993—PDES, Inc.

Notice is hereby given that, on August 26, 1998, pursuant to section 6(a) of the National Cooperative Research and Production Act of 1993, 15 U.S.C. 4301 *et seq.* (''the Act''), PDES, Inc. (''PDES'') has filed written notifications simultaneously with the Attorney General and the Federal Trade Commission disclosing changes in its membership status. The notifications were filed for the purpose of extending the Act's provisions limiting the recovery of antitrust plaintiffs to actual damages under specified circumstances. Specifically, Delphi Delco Electronics, Kokomo, IN; DoD/Ramp Program Office, Crane, IN; NASA, Greenbelt, MD; and Theorem Solutions Limited, Fradley Park, Staffordshire, ENGLAND have been added as parties to this venture. Also, AT&T, Holmdel, NJ; Autodesk, San Rafael, CA; Computervision Corporation, Bedford, MA; and General Electric Company, Cincinnati, OH have been dropped as parties to this venture.

General Dynamics Corporation, Groton, CT has changed its membership name to Electric Boat Corporation—A General Dynamics Company, Groton, CT; and McDonnell Douglas Corporation, St. Louis, MO has merged with The Boeing Company, Seattle, WA.

No other changes have been made in either the membership or planned activity of the group research project. Membership in this group research project remains open, and PDES intends to file additional written notifications disclosing all changes in membership.

On September 20, 1988, PDES filed its original notification pursuant to section 6(a) of the Act. The Department of Justice published a notice in the **Federal Register** pursuant to section 6(b) of the Act on October 14, 1988 (53 FR 40282).

The last notification was filed with the Department on March 27, 1995. A notice was published in the **Federal Register** pursuant to Section 6(b) of the Act on June 20, 1995 (60 FR 32170).

Constance K. Robinson,

Director of Operations, Antitrust Division.

[FR Doc. 99–2039 Filed 1–27–99; 8:45 am]

BILLING CODE 4410–11–M

DEPARTMENT OF JUSTICE

Antitrust Division

Notice Pursuant to the National Cooperative Research and Production Act of 1993—Symbian Limited

Notice is hereby given that, on July 21, 1998, pursuant to section 6(a) of the National Cooperative Research and Production Act of 1993, 15 U.S.C. 4301 *et seq.* (''the Act''), Symbian Limited has filed written notifications simultaneously with the Attorney General and the Federal Trade Commission disclosing (1) the identities of the parties and (2) the nature and objectives of the venture. The notifications were filed for the purpose of invoking the Act's provisions limiting the recovery of antitrust plaintiffs to actual damages under specified circumstances. Pursuant to section 6(b) of the Act, the identities of the parties are Nokia Corporation, Espoo, FINLAND; Telefonaktiebologet L. M. Ericsson, Stockholm, SWEDEN; and Psion PLC, London, ENGLAND. The nature and objectives of the venture are to develop an operating system, as well as development tools and applications, for Wireless Information Devices. Symbian intends to license the technologies developed by the venture to the participants to the venture and third parties.

Constance K. Robinson,

Director of Operations, Antitrust Division.

[FR Doc. 99–2036 Filed 1–27–99; 8:45 am]

BILLING CODE 4410–11–M

DEPARTMENT OF JUSTICE

Antitrust Division

Notice Pursuant to the National Cooperative Research and Production Act of 1993—Telemanagement Forum

Notice is hereby given that, on September 23, 1998, pursuant to section 6(a) of the National Cooperative Research and Production Act of 1993, 15 U.S.C. 4301 *et seq.* (''the Act''), the TeleManagement Forum (''the Forum''), formerly known as the Network Management Forum, has filed written notifications simultaneously with the Attorney General and the Federal Trade Commission disclosing changes in its

membership status. The notifications were filed for the purpose of extending the Act's provisions limiting the recovery of antitrust plaintiffs to actual damages under specified circumstances. Specifically, Emirates Telecommunications Corp. (ETISALAT), Abu Dhabi, UNITED ARAB EMIRATES; MediaOne Group, Boulder, CO; and EHPT, Stockholm, SWEDEN have been added as Corporate Members.

Slovak Telecom, Bratislava, SLOVAK REPUBLIC; Beechwood Data Systems, Clark, NJ; Oracle Corporation, Redwood Shores, CA; SSA Softwright, Langley, Berkshire, ENGLAND; StreamSoft, Inc., San Jose, CA; Kingston Communications PLC, Hull, ENGLAND; BSW Telecoms, Midrand, SOUTH AFRICA; Finnet Nine LTD., Tampere, FINLAND; Hermes Europe Railtel-Her Network Services BVBA, Hoeilaart, BELGIUM; Net2Net Corporation, Hudson, MA; Openet International, Dublin, IRELAND; Concert Communications Company, Reston, VA; Visionael, Tulsa, OK; Teleknowledge Group Ltd., Kfar Saba, ISRAEL; Nightfire Software, Inc., Berkeley, CA; Telkom SA, Pretoria, SOUTH AFRICA; Infostrada SJA, Milan, ITALY; Nextel Communications, Inc., McLean, VA; Teligent, Herndon, VA; Wandel & Goltermann, Ltd., Plymouth, Devon, ENGLAND; InConcert, Inc., Cambridge, MA; ComArch S. A., Krakow, POLAND; and Netscient Limited, Alvechurch, Worcestershire, ENGLAND have been added as Associate Members.

Ernst & Young, LLP., Sacramento, CA; Broadband & Networking Consultants, Inc., Herndon, VA; Hanson Cooke, London, ENGLAND; Ukrainian Research Institute of Communications (UNDIZ), Kiev, UKRAINE; Instituto Costarricense de Electricidad, San Jose, COSTA RICA; United Systems, Ltd., Ipswich, Suffolk, ENGLAND; Conexus Global Information AG, Zurich, SWITZERLAND; and JK Zcom, Inc., Manassas, VA have been added as Affiliate Members.

No other changes have been made in either the membership or planned activity of the group research project. Membership in this group research project remains open, and the Forum intends to file additional written notifications disclosing all changes in membership.

On October 21, 1988, the Forum filed its original notification pursuant to section 6(a) of the Act. The Department of Justice published a notice in the **Federal Register** pursuant to section 6(b) of the Act on December 8, 1988 (53 FR 49615).

The last notification was filed with the Department on April 3, 1998. A notice for this filing has not yet been published in the **Federal Register**.

Constance K. Robinson,

Director of Operations, Antitrust Division.

[FR Doc. 99–2038 Filed 1–27–99; 8:45 am]

BILLING CODE 4410–11–M

DEPARTMENT OF JUSTICE

Antitrust Division

Notice Pursuant to the National Cooperative Research and Production Act of 1993—Witech: Widegap Technology, LLC

Notice is hereby given that, on December 29, 1998, pursuant to section 6(a) of the National Cooperative Research and Production Act of 1993, 15 U.S.C. 4301 *et seq.* (''the Act''), Widegap Technology, LLC has filed written notifications simultaneously with the Attorney General and the Federal Trade Commission disclosing (1) the identities of the parties and (2) the nature and objectives of the venture. The notifications were filed for the purpose of invoking the Act's provisions limiting the recovery of antitrust plaintiffs to actual damages under specified circumstances. Pursuant to Section 6(b) of the Act, the identities of the parties are Widegap Technology, LLC, Wetlake Village, CA; General Electric Company, Cleveland, OH; and GELcore, LLC, Cleveland, OH. The nature and objectives of the venture are to develop and demonstrate high efficiency solid state lighting devices.

The activities of this Joint Venture project will be partially funded by an award from the Advanced Technology Program, National Institute of Standards and Technology, Department of Commerce.

Constance K. Robinson,

Director of Operations, Antitrust Division.

[FR Doc. 99–2037 Filed 1–27–99; 8:45 am]

BILLING CODE 4410–11–M

DEPARTMENT OF JUSTICE

Immigration and Naturalization Service

Agency Information Collection Activities; Comment Request

ACTION: Request OMB Emergency Approval; Employment Authorization Document.

The Department of Justice, Immigration and Naturalization Service has submitted an emergency information collection request (ICR) utilizing emergency review procedures, to the Office of Management and Budget (OMB) for review and clearance in accordance with section 1320.13(a)(1)(ii) and (a)(2)(iii) of the Paperwork Reduction Act of 1995. OMB approval has been requested by February 5, 1999. If granted, the emergency approval is only valid for 180 days. All comments and/or questions pertaining to this pending request for emergency approval MUST be directed to OMB, Office of Information and Regulatory Affairs, Attention: Mr. Stuart Shapiro, 202–395–7316, Department of Justice Desk Officer, Washington, DC 20503. Comments regarding the emergency submission of this information may also be submitted via facsimile to Mr. Shapiro at 202–395–6974.

During the first 60 days of this same period, a regular review of this information collection is also being undertaken. During the regular review period, the INS requests written comments and suggestions from the public and affected agencies concerning this information collection. Comments are encouraged and will be accepted for ''sixty days'' until March 29, 1999. During the 60-day regular review, ALL comments and suggestions, or questions regarding additional information, to include obtaining a copy of the information collection instrument with instructions, should be directed to Mr. Richard A. Sloan, 202–514–3291, Director, Policy Directives and Instructions Branch, Immigration and Naturalization Service, U.S. Department of Justice, Room 5307, 425 I Street, NW, Washington, DC 20536.

Written comments and suggestions from the public and affected agencies concerning the proposed collection of information should address one or more of the following four points:

(1) Evaluate whether the proposed collection of information is necessary for the proper performance of the functions of the agency, including whether the information will have practical utility;

(2) Evaluate the accuracy of the agencies estimate of the burden of the proposed collection of information, including the validity of the methodology and assumptions used;

(3) Enhance the quality, utility, and clarity of the information to be collected; and

(4) Minimize the burden of the collection of information on those who are to respond, including through the use of appropriate automated, electronic, mechanical, or other technological collection techniques or other forms of information technology, e.g., permitting electronic submission of responses.

Overview of this information collection:

(1) *Type of Information Collection:* Reinstatement without change of previously approved collection.

(2) *Title of the Form/Collection:* Application for Employment Authorization.

(3) *Agency form number, if any, and the applicable component of the Department of Justice sponsoring the collection:* Form I–765. Adjudications Division, Immigration and Naturalization Service.

(4) *Affected public who will be asked or required to respond, as well as a brief abstract:* Primary: Individuals or households. The information on the collection will be used by the INS to determine eligibility for work authorization and for the issuance of the employment document.

(5) *An estimate of the total number of respondents and the amount of time estimated for an average respondent to respond:* 1,244,722 responses at 3 hours and 25 minutes (3.416) per response.

(6) *An estimate of the total public burden (in hours) associated with the collection:* 4,251,970 annual burden hours.

If you have additional comments, suggestions, or need a copy of the proposed information collection instrument with instructions, or additional information, please contact Richard A. Sloan 202–514–3291, Director, Policy Directives and Instructions Branch, Immigration and Naturalization Service, U.S. Department of Justice, Room 5307, 425 I Street, NW., Washington, DC 20536. Additionally, comments and/or suggestions regarding the item(s) contained in this notice, especially regarding the estimated public burden and associated response time may also be directed to Mr. Richard A. Sloan.

If additional information is required contact: Mr. Robert B. Briggs, Clearance Officer, United States Department of Justice, Information Management and Security Staff, Justice Management Division, Suite 850, Washington Center, 1001 G Street, NW., Washington, DC 20530.

Dated: January 22, 1999.

Richard A. Sloan,

Department Clearance Officer, United States Department of Justice, Immigration and Naturalization Service.

[FR Doc. 99–1972 Filed 1–27–99; 8:45 am]

BILLING CODE 4410–10–M

DEPARTMENT OF JUSTICE

Office of Justice Programs

Bureau of Justice Statistics; Agency Information Collection Activities: Proposed Collection; Comment Request

ACTION: Notice of Information Collection Under Review; (Reinstatement, with change, of a previously approved collection for which approval has expired) Census of Jails, Form CJ–3, CJ–3 Addendum, CJ–3A, CJ–3B.

The Department of Justice, Office of Justice Programs, Bureau of Justice Statistics, has submitted the following information collection request for review and clearance in accordance with the Paperwork Reduction Act of 1995. This proposed information collection is published to obtain comments from the public and affected agencies. Comments are encouraged and will be accepted for ''sixty days'' until March 29, 1999.

If you have additional comments, suggestions, or need a copy of the proposed information collection instrument with instructions or additional information, please contact Darrell Gilliard, 202–616–3280, Bureau of Justice Statistics, Office of Justice Programs, U.S. Department of Justice, 810 7th Street, N.W., Washington, DC 20531.

Written comments and suggestions from the public and affected agencies concerning the proposed collection of information should address one or more of the following four points:

(1) Evaluate whether the proposed collection of information is necessary for the proper performance of the function of the agency, including whether the information will have practical utility;

(2) Evaluate the accuracy of the agency's estimate of the burden of the proposed collection of information, including the validity of the methodology and assumptions used;

(3) Enhance the quality, utility, and clarity of the information to be collected; and

(4) Minimize the burden of the collection of information on those who are to respond, including through the use of appropriate automated, electronic, mechanical, or other technological collection techniques or other forms of information technology, e.g., permitting electronic submission of responses.

Overview of this information:

(1) *Type of information collection:* Reinstatement, with change, of a previously approved collection for which approval has expired.

(2) *The title of the form/collection:* Census of Jails.

(3) *The agency form number, if any, and the applicable component of the Department sponsoring the collection:* Forms CJ–3, CJ–3 Addendum, CJ–3A, and CJ–3B, Bureau of Justice Statistics, Office of Justice Program, United States Department of Justice.

(4) *Affected public who will be asked or required to respond, as well as a brief abstract:* Primary: Federal, County, City, and Tribal jail authorities. The Census of Jails is conducted every 5 to 6 years, obtaining information on each jail facility, admissions and releases, court orders, programs that offer alternatives to incarceration, amount charged to hold an inmate for another jurisdiction, crowding and use of space, staffing, and health care (including prevalence, of HIV/AIDS and tuberculosis). The census furnishes the sampling frame for the Survey of Jail Inmates and the Annual Survey of Jails. The Omnibus Crime Control and Safe Street Act of 1968, as amended (42 U.S.C. 3732) authorizes the Bureau of Justice Statistics, Office of Justice Programs, U.S. Department of Justice to collect this information.

(5) *An estimate of the total number of respondents and the amount of time estimated for an average respondent to respond/reply:* It is estimated that 3,553 respondents will complete a 1-hour census form.

(6) *An estimate of the total public burden (in hours) associated with the collection:* The total number of burden hours to complete the Census of Jails is 3,553 hours.

If additional information is required contact: Mrs. Brenda E. Dyer, Deputy Clearance Officer, United States Department of Justice, Information Management and Security Staff, Justice Management Division, Suite 850, Washington Center, 1001 G Street, N.W., Washington, DC 20530, or via facsimile at (202) 514–1534.

Dated: January 22, 1999.

Brenda E. Dyer,

Department Deputy Clearance Officer, United States Department of Justice.

[FR Doc. 99–1981 Filed 1–27–99; 8:45 am]

BILLING CODE 4410–18–M

DEPARTMENT OF LABOR

Employment and Training Administration

Request for Membership Nominations; Federal Committee on Apprenticeship

SUMMARY: Notice is hereby given that under the provisions of the Federal Advisory Committee Act, the Secretary of Labor is seeking nominations to fill 21 vacancies on the Federal Committee on Registered Apprenticeship (FCRA). The Committee was reestablished December 28, 1998.

Recommendations are being sought from these groups:

Management: Representatives of an employer or national employer association.

Labor: Representatives of employees or national employees association.

Public: Representatives of religious, social welfare, academic, charitable organizations, community-based organizations, national women's organizations, state or local government.

Only individuals who have timely knowledge or familiarity with apprenticeship and structured, workplace training programs should be recommended. Also, a description of the candidate's qualifications, and the group he or she would represent should be included. The Department of Labor is committed to equal opportunity in the workplace and seeks a broad-based and diverse FCRA membership.

DATES: To ensure consideration, nominations should be postmarked on or before March 1, 1999.

ADDRESSES: Nominations should be submitted to Mr. Anthony Swoope, Director, Bureau of Apprenticeship and Training, Employment and Training Administration, U.S. Department of Labor, Frances Perkins Building, Room N–4649, 200 Constitution Avenue, NW, Washington, D.C. 20210.

FOR FURTHER INFORMATION CONTACT: Mr. Anthony Swoope, Telephone: (202) 219–5921 (X–102) (this is not a toll-free number). FAX (202) 219–5011.

Signed at Washington, D.C., this 22nd day of January, 1999.

Raymond Bramucci,

Assistant Secretary of Labor for Employment and Training.

[FR Doc. 99–2005 Filed 1–27–99; 8:45 am]

BILLING CODE 4510–30–M

NATIONAL AERONAUTICS AND SPACE ADMINISTRATION

[Notice (99–017)]

Information Collections; Agency Report Forms Under OMB Review

AGENCY: National Aeronautics and Space Administration (NASA).

ACTION: Notice of Agency Report Forms Under OMB Review.

SUMMARY: The National Aeronautics and Space Administration, as part of its continuing effort to reduce paperwork and respondent burden, invites the general public and other Federal agencies to take this opportunity to comment on proposed and/or continuing information collections, as required by the Paperwork Reduction Act of 1995 (Pub. L. 104–13: 44 U.S.C. 3506(c)(2)(A)). This information is used to determine whether the requested license should be granted.

DATES: Written comments and recommendations on the proposal for the collection of information should be received on or before March 29, 1999.

ADDRESSES: All comments should be addressed to Mr. Robert Yang / 211, National Aeronautics and Space Administration, Langley Research Center, Hampton, VA 23681. All comments will become a matter of public record and will be summarized in NASA's request for OMB approval.

FOR FURTHER INFORMATION CONTACT: Ms. Carmela Simonson, Office of the Chief Information Officer, (202) 358–1223.

Reports: None.

Title: NASA Commercial Technology Program (CTP) Client Feedback Survey.

OMB Number: 2700–

Type of review: New.

Need and Uses: This collection will be used to evaluate agency CTP business practices in order to determine their adequacy and efficiency, and to promote the development and use of business principles, standards and guidelines.

Affected Public: Business or other for-profit.

Number of Respondents: 500.

Responses Per Respondent: 1.

Annual Responses: 300.

Hours Per Request: ¼ hr.

Annual Burden Hours: 75.

Frequency of Report: Annually.

David B. Nelson,

Acting Chief Information Officer, Office of the Administrator.

[FR Doc. 99–2061 Filed 1–27–99; 8:45 am].

BILLING CODE 7510–01–P

NATIONAL AERONAUTICS AND SPACE ADMINISTRATION

[Notice 99–018]

NASA Advisory Council (NAC), Technology and Commercialization Advisory Committee (TCAC); Meeting

AGENCY: National Aeronautics and Space Administration.

ACTION: Notice of meeting.

SUMMARY: In accordance with the Federal Advisory Committee Act, Pub. L. 92–463, as amended, the National Aeronautics and Space Administration announces a meeting of the NASA Advisory Council, Technology and Commercialization Advisory Committee.

DATES: Tuesday, February 9, 1999, 8:30 a.m. to 5 p.m. and Wednesday, February 10, 1999, 8:30 a.m. to 2 p.m.

ADDRESSES: National Aeronautics and Space Administration, Room MIC–6, 300 E Street, SW, Washington, DC 20546.

FOR FURTHER INFORMATION CONTACT: Mr. Gregory M. Reck, Code AF, National Aeronautics and Space Administration, Washington, DC 20546 (202/358–4700).

SUPPLEMENTARY INFORMATION: The meeting will be open to the public up to the seating capacity of the room. The agenda for the meeting is as follows:

—NASA response to advisory members on commercial policy and planning
—NASA response to advisory members on NASA technology
—Briefing on Human Exploration and Development of Space technologies

It is imperative that the meeting be held on these dates to accommodate the scheduling priorities of the key participants. Visitors will be requested to sign a visitor's register.

Dated: January 25, 1999.

Matthew M. Crouch,

Advisory Committee Management Officer, National Aeronautics and Space Administration.

[FR Doc. 99–2062 Filed 1–27–99; 8:45 am]

BILLING CODE 7510–01–P

NATIONAL AERONAUTICS AND SPACE ADMINISTRATION

[Notice 99–019]

NASA Advisory Council; Meeting

AGENCY: National Aeronautics and Space Administration.

ACTION: Notice of meeting.

SUMMARY: In accordance with the Federal Advisory Committee Act, Pub.

L. 92–463, as amended, the National Aeronautics and Space Administration announces a meeting of the NASA Advisory Council.

DATES: Wednesday, February 24, 1999, 8:30 a.m. to 5 p.m.; and Thursday, February 25, 1999, 8:30 a.m. to 3 p.m.

ADDRESSES: National Aeronautics and Space Administration, Room 9H40, 300 E Street, SW, Washington, DC 20546.

FOR FURTHER INFORMATION CONTACT: Ms. Kathy Dakon, Code Z, National Aeronautics and Space Administration, Washington, DC 20546, 202/358–0732.

SUPPLEMENTARY INFORMATION: The meeting will be closed to the public on Wednesday, February 24, 1999, from 8:30 a.m. to 5 p.m. in accordance with 5 U.S.C. 552b(c)(4), to allow for industry presentations which may contain proprietary data. Thursday, February 25, 1999, will be open to the public up to the seating capacity of the room. The agenda for the meeting is as follows:

—Status Presentation of X–33 and X–34
—Committee/TaskForce/Working Group Reports
—Discussion of Findings and Recommendations

A detailed agenda and further information about the NASA Advisory Council is available on the world wide web at: http://www.hq.nasa.gov/office/codez/nac.htm.

It is imperative that the meeting be held on these dates to accommodate the scheduling priorities of the key participants. Visitors will be requested to sign a visitor's register.

Dated: January 22, 1999.

Matthew M. Crouch,

Advisory Committee Management Officer, National Aeronautics and Space Administration.

[FR Doc. 99–2063 Filed 1–27–99; 8:45 am]

BILLING CODE 7510–01–P

NATIONAL AERONAUTICS AND SPACE ADMINISTRATION

[Notice 99–020]

NASA Advisory Council (NAC), Space Science Advisory Committee (SScAC), Solar System Exploration Subcommittee

AGENCY: National Aeronautics and Space Administration.

ACTION: Notice of meeting.

SUMMARY: In accordance with the Federal Advisory Committee Act, Pub. L. 92–463, as amended, the National Aeronautics and Space Administration announces a meeting of the NASA Advisory Council, Space Science Advisory Committee, Solar System Exploration Subcommittee.

DATES: Monday, February 22, 1999, 8:30 a.m. to 5 p.m., and Tuesday, February 23, 1999, 8:30 a.m. to 5 p.m.

ADDRESSES: Radisson Resort on the Port, 8701 Astronaut Boulevard, Cape Canaveral, Florida.

FOR FURTHER INFORMATION CONTACT: Dr. Carl Pilcher, Code S, National Aeronautics and Space Administration, Washington, DC 20546, (202) 358–2470.

SUPPLEMENTARY INFORMATION: The meeting will be open to the public up to the capacity of the room. The Agenda for the meeting is as follows:

—Introductory Plenary
—SSES–SeCAS meeting
—Plenary with Dr. E. Weiler
—SSES–OS meeting
—SSES–SEUS meeting
—General meeting
—SSES meets with Dr. E. Weiler
—Concluding discussion; future plans

It is imperative that the meeting be held on these dates to accommodate the scheduling priorities of the key participants. Visitors will be requested to sign a visitor's register.

Dated: January 22, 1999.

Matthew M. Crouch,

Advisory Committee Management Officer, National Aeronautics and Space Administration.

[FR Doc. 99–2064 Filed 1–27–99; 8:45 am]

BILLING CODE 7510–01–P

THE NATIONAL BIPARTISAN COMMISSION ON THE FUTURE OF MEDICARE

Public Meeting

The National Bipartisan Commission on the Future of Medicare will hold a public meeting on Tuesday, February 9, 1999 beginning at 9:00 a.m. Location of the meeting to be announced. Please check the Commission's web site for additional information: *http://Medicare.Commission.Gov*

Tuesday, February 9, 1999, 9:00 a.m.

Agenda: Members of the Commission to discuss a premium support system.

If you have any questions, please contact the Bipartisan Medicare Commission, ph: 202–252–2380.

I hereby authorize publication of the Medicare Commission meetings in the **Federal Register**.

Julie Hasler,

Office Manager, National Bipartisan Medicare Commission.

[FR Doc. 99–2183 Filed 1–26–99; 3:03 pm]

BILLING CODE 1132–00–M

NUCLEAR REGULATORY COMMISSION

[Docket No. 50–461]

Illinois Power Company; Notice of Consideration of Issuance of Amendment to Facility Operating License, Proposed No Significant Hazards Consideration Determination, and Opportunity for a Hearing

The U.S. Nuclear Regulatory Commission (the Commission) is considering issuance of an amendment to Facility Operating License No. NPF–62 issued to Illinois Power Company (IP, or the licensee) for operation of the Clinton Power Station (CPS), located in DeWitt County, Illinois.

The proposed amendment requests changes to the Technical Specification degraded voltage relay setpoints.

Before issuance of the proposed license amendment, the Commission will have made findings required by the Atomic Energy Act of 1954, as amended (the Act) and the Commission's regulations.

The Commission has made a proposed determination that the amendment request involves no significant hazards consideration. Under the Commission's regulations in 10 CFR 50.92, this means that operation of the facility in accordance with the proposed amendment would not (1) involve a significant increase in the probability or consequences of an accident previously evaluated; or (2) create the possibility of a new or different kind of accident from any accident previously evaluated; or (3) involve a significant reduction in a margin of safety. As required by 10 CFR 50.91(a), the licensee has provided its analysis of the issue of no significant hazards consideration, which is presented below:

(1) The proposed changes do not involve a significant increase in the probability or consequences of an accident previously evaluated.

The degraded voltage relays are designed to respond to degraded voltage conditions from the offsite sources, and are not initiators of such a condition themselves. However, proper establishment of the degraded voltage relay setpoints is necessary to avoid inadvertent or unnecessary disconnection of the offsite source and transfer to the standby diesel generators (DGs) when the offsite sources are still capable of supplying adequate power to the plant safety buses. At the same time, proper establishment of the setpoints must also ensure that a transfer will occur when required so that power can be provided to safety loads, with voltage at greater than or equal to the minimum required voltage. The revised degraded voltage setpoints were established consistent with these requirements using an NRC-

approved methodology. The revised setpoints (and the revised minimum bus voltage specified in the DG surveillances) take into account the new minimum required bus voltage required for all safety loads based on a more in-depth circuit analysis. Concurrently, the expected range of offsite voltage has been factored into the setpoint calculations to ensure that the offsite source can reset the degraded voltage relays at the minimum expected offsite voltage, thus maximizing the availability of the offsite source consistent with the intent of 10 CFR 50 Appendix A General Design Criterion 17.

Raising the degraded voltage relay setpoints does not increase the probability of transferring the safety buses to the DGs. This is because the existing margin between the safety bus voltage (based on the minimum expected offsite voltage) and the upper reset value of the degraded voltage relay will be maintained by the static VAR compensators that are installed on the CPS auxiliary power system.

Chapter 15 of the Clinton Updated Safety Analysis Report (USAR) discusses the effects of anticipated process disturbances to determine their consequences and the capability of the plant to control or accommodate such events. Subsection 15.2.6 discusses loss of a-c power, including loss of grid voltage. This discussion demonstrates that fuel design limits and reactor coolant pressure boundary design conditions are not exceeded. The proposed changes do not affect the discussion nor the conclusion of this evaluation.

Due to the associated change in the tap setting for the reserve auxiliary transformer (RAT), the proposed changes involve some increased potential for overvoltage for certain loads. Although the estimated magnitude of the overvoltage to those loads is not severe, procedural guidance will be established to prevent or mitigate such a condition. This will minimize the potential for equipment failure due to overvoltage. Therefore, this aspect of the proposed changes does not involve a significant increase in the probability of failure of equipment important to safety.

Based on the above, the proposed changes do not involve a significant increase in the probability or consequences of any accident previously evaluated.

(2) The proposed changes do not create the possibility of a new or different kind of accident from any accident previously evaluated.

The proposed changes involve setpoint changes for the degraded voltage relays and a change to the minimum bus voltage required to be achieved during DG testing. The setpoint changes to the relays alters their performance in an intended manner but in no other way affects their intended function. The change to the DG surveillance criteria is primarily administrative since the DGs have repeatedly shown that they are able to achieve this value during testing. The DGs themselves are physically unaffected. These changes by themselves thus involve no physical changes to the facility, no new failure modes of initiating conditions that could lead to a new or different accident.

Notwithstanding the above, and as noted previously, the associated change in the RAT tap setting could involve an increased potential for overvoltage to some plant loads. As noted above, however, this potential is reduced by providing procedural guidance to plant operators. The potential for equipment failure due to overvoltage is thus minimized, and no new failure mode is thus introduced.

Based on the above, the proposed changes do not involve any significant increase in the failure of plant equipment due either to overvoltage or inadequate voltage, and do not introduce any new failure modes or conditions that could lead to a new or different kind of accident. On this basis, the proposed changes do not create the possibility of a new or different accident from any accident previously evaluated.

(3) None of the proposed changes involve a significant reduction in a margin of safety.

The margin of safety that may be associated with the degraded voltage relays is the margin involved in ensuring adequate voltage to plant safety loads. The revised degraded voltage relay setpoints, as proposed, were established by an NRC-accepted methodology that ensures the revised setpoints will maintain this margin of safety. Consistent with this determination, the proposed revision of the lower voltage limit for the DG surveillances (SR3.8.1.2, SR 3.8.1.7, SR 3.8.1.11, SR 3.8.1.12, SR 3.8.1.15, SR 3.8.1.19, and SR 3.8.1.20) will assure that the DGs will be capable of controlling voltage to a range that will be adequate for the loads on the bus. This value was determined using revised voltage calculations and is consistent with the proposed degraded voltage setpoints. Therefore, the proposed changes do not involve a significant reduction in a margin of safety.

The NRC staff has reviewed the licensee's analysis and, based on this review, it appears that the three standards of 10 CFR 50.92(c) are satisfied. Therefore, the NRC staff proposes to determine that the amendment request involves no significant hazards consideration.

The Commission is seeking public comments on this proposed determination. Any comments received within 30 days of the date of publication of this notice will be considered in making any final determination.

Normally, the Commission will not issue the amendment until the expiration of the 30-day notice period. However, should circumstances change during the notice period such that failure to act in a timely way would result, for example, in derating or shutdown of the facility, the Commission may issue the license amendment before the expiration of the 30-day notice period, provided that its final determination is that the amendment involves no significant hazards consideration. The final determination will consider all public and State comments received. Should the Commission take this action, it will publish in the **Federal Register** a notice of issuance and provide for opportunity for a hearing after issuance. The Commission expects that the need to take this action will occur very infrequently.

Written comments may be submitted by mail to the Chief, Rules and Directives Branch, Division of Administrative Services, Office of Administration, U.S. Nuclear Regulatory Commission, Washington, DC 20555–0001, and should cite the publication date and page number of this **Federal Register** notice. Written comments may also be delivered to Room 6D59, Two White Flint North, 11545 Rockville Pike, Rockville, Maryland, from 7:30 a.m. to 4:15 p.m. Federal workdays. Copies of written comments received may be examined at the NRC Public Document Room, the Gelman Building, 2120 L Street, NW., Washington, DC.

The filing of requests for hearing and petitions for leave to intervene is discussed below.

By March 1, 1999, the licensee may file a request for a hearing with respect to issuance of the amendment to the subject facility operating license and any person whose interest may be affected by this proceeding and who wishes to participate as a party in the proceeding must file a written request for a hearing and a petition for leave to intervene. Requests for a hearing and a petition for leave to intervene shall be filed in accordance with the Commission's ''Rules of Practice for Domestic Licensing Proceedings'' in 10 CFR Part 2. Interested persons should consult a current copy of 10 CFR 2.714, which is available at the Commission's Public Document Room, the Gelman Building, 2120 L Street, NW., Washington, DC, and at the local public document room located at the Vespasian Warner Public Library, 310 N. Quincy Street, Clinton, IL 61727. If a request for a hearing or petition for leave to intervene is filed by the above date, the Commission or an Atomic Safety and Licensing Board, designated by the Commission or by the Chairman of the Atomic Safety and Licensing Board Panel, will rule on the request and/or petition; and the Secretary or the designated Atomic Safety and Licensing Board will issue a notice of hearing or an appropriate order.

As required by 10 CFR 2.714, a petition for leave to intervene shall set forth with particularity the interest of the petitioner in the proceeding, and how that interest may be affected by the results of the proceeding. The petition should specifically explain the reasons why intervention should be permitted with particular reference to the following factors: (1) the nature of the

petitioner's right under the Act to be made party to the proceeding; (2) the nature and extent of the petitioner's property, financial, or other interest in the proceeding; and (3) the possible effect of any order which may be entered in the proceeding on the petitioner's interest. The petition should also identify the specific aspect(s) of the subject matter of the proceeding as to which petitioner wishes to intervene. Any person who has filed a petition for leave to intervene or who has been admitted as a party may amend the petition without requesting leave of the Board up to 15 days prior to the first prehearing conference scheduled in the proceeding, but such an amended petition must satisfy the specificity requirements described above.

Not later than 15 days prior to the first prehearing conference scheduled in the proceeding, a petitioner shall file a supplement to the petition to intervene which must include a list of the contentions which are sought to be litigated in the matter. Each contention must consist of a specific statement of the issue of law or fact to be raised or controverted. In addition, the petitioner shall provide a brief explanation of the bases of the contention and a concise statement of the alleged facts or expert opinion which support the contention and on which the petitioner intends to rely in proving the contention at the hearing. The petitioner must also provide references to those specific sources and documents of which the petitioner is aware and on which the petitioner intends to rely to establish those facts or expert opinion. Petitioner must provide sufficient information to show that a genuine dispute exists with the applicant on a material issue of law or fact. Contentions shall be limited to matters within the scope of the amendment under consideration. The contention must be one which, if proven, would entitle the petitioner to relief. A petitioner who fails to file such a supplement which satisfies these requirements with respect to at least one contention will not be permitted to participate as a party.

Those permitted to intervene become parties to the proceeding, subject to any limitations in the order granting leave to intervene, and have the opportunity to participate fully in the conduct of the hearing, including the opportunity to present evidence and cross-examine witnesses.

If a hearing is requested, the Commission will make a final determination on the issue of no significant hazards consideration. The final determination will serve to decide when the hearing is held.

If the final determination is that the amendment request involves no significant hazards consideration, the Commission may issue the amendment and make it immediately effective, notwithstanding the request for a hearing. Any hearing held would take place after issuance of the amendment.

If the final determination is that the amendment request involves a significant hazards consideration, any hearing held would take place before the issuance of any amendment.

A request for a hearing or a petition for leave to intervene must be filed with the Secretary of the Commission, U.S. Nuclear Regulatory Commission, Washington, DC 20555–0001, Attention: Rulemakings and Adjudications Staff, or may be delivered to the Commission's Public Document Room, the Gelman Building, 2120 L Street, NW., Washington, DC, by the above date. A copy of the petition should also be sent to the Office of the General Counsel, U.S. Nuclear Regulatory Commission, Washington, DC 20555–0001, and to Leah Manning Stetzner, Vice President, General Counsel, and Corporate Secretary, 500 South 27th Street, Decatur, IL 62525, attorney for the licensee.

Nontimely filings of petitions for leave to intervene, amended petitions, supplemental petitions and/or requests for hearing will not be entertained absent a determination by the Commission, the presiding officer, or the presiding Atomic Safety and Licensing Board that the petition and/or request should be granted based upon a balancing of the factors specified in 10 CFR 2.714(a)(1)(I)–(v) and 2.714(d).

For further details with respect to this action, see the application for amendment dated January 20, 1999, which is available for public inspection at the Commission's Public Document Room, the Gelman Building, 2120 L Street, NW., Washington, DC, and at the local public document room located at the Vespasian Warner Public Library, 310 N. Quincy Street, Clinton, IL 61727.

Dated at Rockville, Maryland, this 22nd day of January 1999.

For the Nuclear Regulatory Commission.

Jon B. Hopkins,

Senior Project Manager, Project Directorate III–2, Division of Reactor Projects—III/IV, Office of Nuclear Reactor Regulation.

[FR Doc. 99–1984 Filed 1–27–99; 8:45 am]

BILLING CODE 7590–01–P

OFFICE OF PERSONNEL MANAGEMENT

[SF 2809–1]

Submission for OMB Review; Comment Request for Review of a New Information Collection

AGENCY: Office of Personnel Management.

ACTION: Notice.

SUMMARY: In accordance with the Paperwork Reduction Act of 1995 (Pub. L. 104–13, May 22, 1995), this notice announces that the Office of Personnel Management has submitted to the Office of Management and Budget a request for a new information collection. SF 2809–1, Annuitant/OWCP Health Benefits Election Form, will be used by annuitants of Federal retirement systems other than the Civil Service Retirement System (CSRS) and the Federal Employees Retirement System (FERS), including the Foreign Service Retirement System and the Office of Workers' Compensation Programs (OWCP), and certain former dependents of these individuals. These former dependents include certain former spouses who are eligible for enrollment under the Spouse Equity Act of 1984 (Pub. L. 98–615), and certain former dependents who are eligible for enrollment under the Temporary Continuation of Coverage (TCC) provisions of FEHB law (5 U.S.C. 8905a).

Approximately 9,000 SF 2809–1 forms will be completed annually. Each form will take approximately 30 minutes to complete. The annual estimated burden will be 4,500 hours.

For copies of this proposal, contact Mary Beth Smith-Toomey on (202) 606–8358, or E-mail to mbtoomey@opm.gov.

DATES: Comments on this proposal should be received by March 1, 1999.

ADDRESSES: Send or deliver comments to—

Abby L. Block, Chief, Insurance Policy and Information Division, Retirement and Insurance Service, U.S. Office of Personnel Management, 1900 E Street, NW, Room 3425, Washington, DC 20415–0001, and

Joseph Lackey, OPM Desk Officer, Office of Information and Regulatory Affairs, Office of Management and Budget, New Executive Office Building, NW, Room 3002, Washington, DC 20503

FOR INFORMATION REGARDING ADMINISTRATIVE COORDINATION—CONTACT: Donna G. Lease, Budget & Administrative Services Division, (202) 606–0623.

Office of Personnel Management.

Janice R. Lachance,

Director.

[FR Doc. 99–1959 Filed 1–27–99; 8:45 am]

BILLING CODE 6325–01–P

POSTAL RATE COMMISSION

Notice of Change in Docket Room Hours

(Authority: 39 U.S.C. 404(b), 3603, 3622–24, 3661, 3662, 3663)

AGENCY: Postal Rate Commission.

ACTION: Change in docket room hours.

SUMMARY: The Commission hereby provides notice that the hours of operation for the docket section, effective February 1, 1999, will be 7:30 a.m. to 4:30 p.m. These hours will be in effect until further notice.

DATES: Changes are effective February 1, 1999.

FOR FURTHER INFORMATION CONTACT: Margaret P. Crenshaw, Secretary, 1333 H Street, NW, Washington, D.C. 20268–0001 (202–789–6840).

Dated: January 25, 1999.

Margaret P. Crenshaw,

Secretary.

[FR Doc. 99–2027 Filed 1–27–99; 8:45 am]

BILLING CODE 7710–FW–M

SECURITIES AND EXCHANGE COMMISSION

Issuer Delisting; Notice of Application to Withdraw From Listing and Registration; (ABM Industries Incorporated, Common Stock, $0.01 Par Value, and Preferred Stock Purchase Rights) File No. 1–8929

January 22, 1999.

ABM Industries Incorporated (''Company'') has filed an application with the Securities and Exchange Commission (''Commission''), pursuant to Section 12(d) of the Securities Exchange Act of 1934 (''Act'') and Rule 12d2–2(d) promulgated thereunder, to withdraw the above specified securities (''Securities'') from listing and registration on the Pacific Exchange, Inc. (''PCX'' or ''Exchange'').

The reasons cited in the application for withdrawing the Securities from listing and registration include the following:

The Securities of the Company are currently listed for trading on the PCX and the New York Stock Exchange, Inc. (''NYSE''). The Company has complied with Rule 3.4(b) of the PCX by filing with the Exchange a certified copy of the resolutions adopted by the Board of Directors and by the Executive Committee of the Board of Directors authorizing the withdrawal, and in an accompanying letter to the Exchange has stated the reasons for the proposed withdrawal. In making the decision to withdraw from listing on the PCX, the Company considered the direct and indirect costs and expenses attendant on maintaining the dual listing of its Securities. The Company does not see any particular advantage in the dual trading of its Securities. The Company has also determined that the average daily volume of trading in its Securities on the Exchange is under 900 shares, or less than 3% of the total number of shares traded.

The Exchange has informed the Company that it has approved the Company's request to be removed from listing and registration on the Exchange.

This Application relates solely to the withdrawal from listing of the Company's Securities from the Exchange and shall have no effect upon the continued listing of such Securities on the NYSE. By reason of Section 12(b) of the Act and the rules and regulations of the Commission, the Company shall continue to be obligated to file reports under Section 13 of the Act with the Commission and the NYSE.

Any interested person may, on or before February 12, 1999, submit by letter to the Secretary of the Securities and Exchange Commission, 450 Fifth Street, N.W., Washington, D.C. 20549, facts bearing upon whether the application has been made in accordance with the rules of the Exchange and what terms, if any, should be imposed by the Commission for the protection of investors. The Commission, based on the information submitted to it, will issue an order granting the application after the date mentioned above, unless the Commission determines to order a hearing on the matter.

For the Commission, by the Division of Market Regulation, pursuant to delegated authority.

Jonathan G. Katz,

Secretary.

[FR Doc. 99–1999 Filed 1–27–99; 8:45 am]

BILLING CODE 5010–01–M

SECURITIES AND EXCHANGE COMMISSION

[Rel. No. IC– 23661; File No. 812–11456]

MBL Life Assurance Corporation, *et al.*; Notice of Application

January 22, 1999.

AGENCY: The Securities and Exchange Commission (''Commission'').

ACTION: Notice of application for an order pursuant to Section 26(b) of the Investment Company Act of 1940 (the ''1940 Act'') approving a substitution of securities, and pursuant to Section 17(b) of the 1940 Act exempting related transactions from Section 17(a) of the 1940 Act.

Summary of Application: Applicants request an order to permit certain registered unit investment trusts to substitute shares of the Dreyfus Life and Annuity Index Fund, operating as Dreyfus Stock Index Fund for the shares of MBL Growth Fund, Inc. currently held by those unit investments trusts, and to permit certain in-kind redemptions of portfolio securities in connection with the substitutions.

Applicants: MBL Life Assurance Corporation (''MBLLAC'') and MBL Variable Contract Account–2 (''VCA–2'') and MBL Variable Contract Account–3 (''VCA–3,'' together with VCA–2, the ''Separate Accounts'').

Filing Date: The application was filed on January 7, 1999.

Hearing Or Notification Of Hearing: An order granting the application will be issued unless the Commission orders a hearing. Interested persons may request a hearing by writing to the Secretary of the Commission and serving Applicants with a copy of the request, personally or by mail. Hearing requests should be received by the Commission by 5:30 p.m. on February 12, 1999, and should be accompanied by proof of service on Applicants, in the form of an affidavit or, for lawyers, a certificate of service. Hearing requests should state the nature of the writer's interest, the reason for the request, and the issues contested. Persons may request notification of a hearing by writing to the Secretary of the Commission.

ADDRESSES: Secretary, Securities and Exchange Commission, 450 Fifth Street, N.W., Washington, D.C. 20549. Applicants, c/o Frank D. Casciano, Esq., Executive Vice President and General Counsel, MBL Life Assurance Corporation, 520 Broad Street, Newark, New Jersey 07102–3111; Copies to: Frank E. Morgan II, Esq., Dewey Ballantine LLP, 1301 Avenue of the Americas, New York, New York 10019.

FOR FURTHER INFORMATION CONTACT: Ethan D. Corey, Senior Counsel, at (202) 942–0675, or Kevin M. Kirchoff, Branch Chief, at (202) 942–0672, Office of Insurance Products, Division of Investment Management.

SUPPLEMENTAL INFORMTION: The following is a summary of the application, the complete application may be obtained for a fee from the Public Reference Branch of the Commission, 450 5th Street, N.W., Washington, D.C. 20549 (tel. (202) 942–8090).

Applicants' Representation

1. MBL LIfe Assurance Corporation (''MBLLAC'') is a New Jersey stock life insurance company. MBLLAC serves as sponsor and depositor Of VCA–2 and VCA–3.

2. MBLLAC's is currently operating under the terms of the Plan of Rehabilitation (''Plan'') approved by the Superior Court of New Jersey (''Rehabilitation Court'') for its former parent, Mutual Benefit Life Insurance Company in Rehabilitation (''MBL''). Pursuant to the terms of the Plan, on April 29, 1994, MBL assigned to MBLLAC and MBLLAC assumed from MBL, substantially all of MBL's assets and insurance liabilities. MBLLAC will operate under the terms of the Plan until June 30, 1999 (the expiration date of the rehabilitation period). Upon the termination of the Plan, the Separate Accounts are expected to be liquidated and certain contracts, as decribed below, will be terminated (the ''Termination'').

3. Each of the Separate Accounts is registered with the Commission as a unit investment trust. VCA–2 serves as the funding medium for certain group variable annuity contracts (the ''Group Contracts''). VCA–3 serves as the funding medium for certain individual variable annuity contracts (the ''Individual Contracts,'' together with the Group Contracts, the ''Contracts''). VCA–3 has not accepted new or additional contributions since July 16, 1991. Each Separate Account invests exclusively in shares of the MBL Growth Fund, Inc. (''MBL Fund'').

4. MBL Fund is a open-end diversified management investment company incorporated under Maryland law and registered with the Commission under the 1940 Act. Shares of MBL Fund are registered with the Commission under the Securities Act of 1933 (the ''1933 Act''). MBL Fund's primary investment objective is long-term appreciation of capital. It seeks to achieve this objective through investment primarily in equity-type securities including common stocks, as well as securities convertible into, or exchangeable for, common stocks. Shares of MBL Fund are currently sold only to separate accounts of MBLLAC to fund variable annuity contracts. The investment adviser to MBL Fund is Markston Investment Management (''Markston''), a partnership between Markston International, Inc. and MBL Sales Corporation, an indirect subsidiary of MBLLAC. Markston is a registered investment adviser under the Investment Advisers Act of 1940.

5. In accordance with the terms of the Plan, MBLLAC will operate under the terms of the Plan until June 30, 1999 (the expiration date of the rehabilitation period). Pursuant to the Plan (as amended by the Rehabilitation Court in November 1998) on or before the effective date of the Termination (the ''Termination Date''), MBLLAC and the Separate Accounts will be liquidated and the Contracts will be terminated.

6. The Contracts expressly reserve to MBLLAC the right, subject to either: (a) a vote of holders of the Contracts (''Contractholders''); or (b) compliance with the 1940 Act, to substitute shares of another open-end management investment company for shares of MBL Fund held by the appropriate Separate Account.

7. MBLLAC, on its own behalf and on behalf of the Separate Accounts, proposes to substitute shares of Dreyfus Life and Annuity Index Fund, operating as Dreyfus Stock Index Fund (''Index Fund''), an open-end, non-diversified, management investment company for shares of MBL Fund currently held by the Separate Accounts (the ''Substitution''). Applicants assert that the Substitution will benefit the Contract owners and the Separate Account because it is intended to: (a) ensure that the interests of Contractholders in the Separate Accounts will at all times until the Termination Date be sufficiently liquid such that the Separate Accounts are able to honor and comply with any and all requests for transfer or redemption by Contractholders of their contract or account values (the ''Account Values''), within the terms and provisions of the 1940 Act; (b) maintain the Separate Accounts' investment objectives prior to the Termination; and (c) provide for the final payout to the remaining Contractholders in connection with the Termination.

8. The investment objective of the Index Fund is to provide investment results that correspond to the price and yield performance of publicly traded common stocks in the aggregate, as represented by the Standard & Poor's 500 Composite Stock Price Index. Applicants assert that the investment objectives and policies of the MBL Fund are sufficiently similar to the investment objectives and policies of the Index Fund such that the Index Fund will provide a comparable investment strategy and level of risk exposure to that of the Fund, which will serve the interests of Contractholders.

9. The total expenses of the Index Fund currently are 0.26%. The total expenses of the MBL Fund are 0.77%. The total return of the Index Fund has been 8.7%, 22.2%, and 19.4% for the one, three and five year periods ending September 30, 1998. The total return of the MBL Fund has been 8.7%, 25.3% and 19.8% for the last one, three and five year periods. As of September 30, 1998, the Index Fund had $2,606,084,554 in net assets, compared to $58,520,509 for the MBL Fund.

10. On August 6, 1998, MBLLAC notified Contractholders in VCA–2 and VCA–3 that MBLLAC planned to terminate the Contracts and to liquidate the Separate Account on the Termination Date.

11. MBLLAC asserts that it will effect the Substitution as soon as practicable following the issuance of the requested order so as to maximize the liquidity benefits to be realized from the Substitution.

12. Within five days after the Substitution, MBLLAC will send to Contractholders written notice of the Substitution (the ''Substitution Notice'') which will identify the shares of MBL Fund that have been eliminated and the shares of the Index Fund that have been substituted. In addition, if a propsectus relating to the Index Fund has not already been forwarded to Contractholders, the Substitution Notice will be accompanied by such a prospectus. Contractholders will be advised in the Substitution Notice that Contracts which remain with MBLLAC at the Termination Date are subject to termination, and the associated Account Value will be paid as required by law and the Plan (as amended).

13. The Substitution will not result in any change to the Contract fees and charges currently being paid by existing Contract owners.

Applicants' Legal Analysis and Conditions

1. Section 26(b) of the 1940 Act provides that it shall be unlawful for any depositor or trustee of a registered unit investment trust holding the security of a single issuer to substitute another security for such security unless the Commission shall have approved such substitution; and the Commission shall issue an order approving such

substitution if the evidence establishes that it is consistent with the protection of investors and the purposes fairly intended by the policies and provisions of the 1940 Act. Section 26(b) protects the expectation of investors that the unit investment trust will accumulate shares of a particular issuer and is intended to insure that unnecessary or burdensome sales loads, additional reinvestment costs or other charges will not be incurred due to unapproved substitutions of securities.

2. Applicants request an order pursuant to Section 26(b) of the 1940 Act approving the Substitution. Applicants represent that the purposes, terms, and conditions of the Substitution are consistent with the protection for which Section 26(b) was designed. Applicants believe the Substitution will benefit Contractholders because funds in the Separate Accounts would immediately become invested in a larger and more diverse pool of securities than those in which they are currently invested, thereby assuring liquidity. In addition, Applicants assert that the Index Fund provides an investment strategy and level of risk exposure that are comparable to those the MBL Fund. Applicants further assert that the Substitution is consistent with the protection of investors and the purposes fairly intended by the policy and provisions of the 1940 Act because the Substitution is an appropriate interim step in connection with the withdrawal of MBL Fund as an investment option under the Contracts and the proposed termination of the Contracts.

3. Applicants represent that the Contractholders have the right, at any time, both before and after the Substitution Date and prior to the Termination Date, to transfer Account Values from the Separate Accounts to any other separate account which funds similar contracts without incurring any additional fees or charges with respect to such transfer at any time. Applicants represent that the Substitution will in no way alter or interfere with this right.

4. Applicants assert that, following the Substitution and until the Termination Date, Contractholders will be afforded the same contract rights, including surrender and other transfer rights with regard to amounts invested under the Contracts, as they currently have. MBLLAC will bear the cost of the Substitution, including any brokerage, legal and/or accounting fees. Contractholders will not incur any additional fees or charges as a result of the Substitution, nor will their rights or the obligations under any of the Contracts diminish in any way. The Substitution will not result in any adverse tax consequences to any Contractholder, any change in the economic interest or Account Value of any Contractholder or any change in the dollar value of any Contract held by a Contractholder.

5. Section 17(a)(1) of the 1940 Act prohibits any affiliated person or an affiliate of an affiliated person, of a registered investment company, from selling any security or other property to such registered investment company. Section 17(a)(2) of the 1940 Act prohibits such affiliated persons from purchasing any security or other property from such registered investment company.

6. Section 17(b) of the 1940 Act authorizes the Commission to issue an order exempting a proposed transaction from Section 17(a) if: (a) the terms of the proposed transaction are fair and reasonable and do not involve overreaching on the part of any person concerned; (b) the proposed transaction is consistent with the policy of each registered investment company concerned; and (c) the proposed transaction is consistent with the general purposes of the 1940 Act.

7. Applicants request an order pursuant to Section 17(b) of the 1940 Act exempting them from the provisions of Section 17(a) to the extent necessary to use a portion of the securities received in-kind by the Separate Accounts (the ''Accepted Underlying Securities'') from MBL Fund to purchase shares of the Index Fund (the ''In Kind Transactions'').

8. Applicants assert that the proposed In Kind Transactions, including the consideration to be paid and received, are reasonable and fair and do not involve overreaching on the part of any person concerned. As part of the In Kind Transactions, MBLLAC on behalf of the Separate Accounts, will seek to simultaneously place redemption requests with MBL Fund and purchase shares of the Index Fund so that purchases will be for the exact amount of the redemption proceeds. The In Kind Transactions will not effect an appreciable economic change on the Contractholders. MBLLAC, on behalf of the Separate Accounts, will effect the redemption in-kind and the transfer of the Accepted Underlying Securities in a manner that is consistent with the investment objectives and policies and diversification requirements applicable to the Index Fund. MBLLC, on behalf of the Separate Accounts, will take appropriate steps to assure that the Accepted Underlying Securities are suitable investments for the Index Fund.

9. Applicants assert that the Substitution is consistent with the general purposes of the 1940 Act and that the In Kind Transactions do not present any of the conditions or abuses that the 1940 Act was designed to prevent.

Conclusion

Applicants assert that, for the reasons summarized above, the requested order approving the Substitution and In Kind Transactions should be granted.

For the Commission, by the Division of Investment Management, pursuant to delegated authority.

Jonathan G. Katz,

Secretary.

[FR Doc. 99–1998 Filed 1–27–99; 8:45 am]

BILLING CODE 8010–01–M

SECURITIES AND EXCHANGE COMMISSION

[Investment Company Act Release No. 23660; 811–7417]

Old Mutual South Africa Equity Trust; Notice of Application

January 22, 1999.

AGENCY: Securities and Exchange Commission (''SEC'').

ACTION: Notice of Application for Deregistration under section 8(f) of the Investment Company Act of 1940 (the ''Act'').

SUMMARY OF APPLICATION: Applicant requests an order declaring that is has ceased to be an investment company.

FILING DATES: The application was filed on September 29, 1998 and amended on December 17, 1998 and January 20, 1999.

HEARING OR NOTIFICATION OF HEARING: An order granting the application will be issued unless the SEC orders a hearing. Interested persons may request a hearing by writing to the SEC's Secretary and serving applicant with a copy of the request, personally or by mail. Hearing requests should be received by the SEC by 5:30 p.m. on February 16, 1999, and should be accompanied by proof of service on the applicant, in the form of an affidavit or, for lawyers, a certificate of service. Hearing requests should state the nature of the writer's interest, the reason for the request, and the issues contested. Persons may request notification of a hearing by writing to the SEC's Secretary.

ADDRESSES: Secretary, SEC, 450 Fifth Street, N.W., Washington, D.C. 20549. Applicant, Washington Mall Phase II,

4th Floor, 22 Church Street, Hamilton HM11, Bermuda.

FOR FURTHER INFORMATION CONTACT: Diane L. Titus, Paralegal Specialist, at (202) 942–0584, or Mary Kay Frech, Branch Chief, at (202) 942–0564 (Division of Investment Management, Office of Investment Company Regulation).

SUPPLEMENTARY INFORMATION: The following is a summary of the application. The complete application may be obtained for a fee from the Commission's Public Reference Branch, 450 Fifth Street, NW, Washington, DC (telephone (202) 942–8090).

Applicant's Representations

1. Applicant is an open-end, management investment company organized as a trust under the laws of the Commonwealth of Massachusetts. On November 9, 1995, applicant filed a Notification of Registration under section 8(a) of the Act on Form N–8A and an initial registration statement on Form N–1A under section 8(b) of the Act. Applicant has not filed any registration statements with respect to its shares under the Securities Act of 1933 (''1933 Act''). Applicant has sold its shares solely in private placement transactions within the meaning of section 4(2) of the 1933 Act, to institutional investors that are ''accredited investors'' within the meaning of Regulation D under the 1933 Act, as well as to certain investment funds organized outside the United States.

2. Applicant's shares currently are held only by Old Mutual South Africa Growth Assets Fund Limited (the ''SAGA Fund''), which owns 10.50% of applicant's shares, and Old Mutual Fund Holdings (Bermuda) (''Old Mutual''), which owns 89.50% of applicant's shares. Old Mutual is a wholly owned subsidiary of the South Africa Mutual Life Assurance Society. The SAGA Fund is organized under the laws of Bermuda, has 20 beneficial owners, and invests all of its investable assets in applicant. Each investor in the SAGA Fund that is, based on its representations, a U.S. person (as defined in Regulation S under the 1933 Act) received prior to the date of its investment in the SAGA Fund written disclosure stating that applicant would seek to deregister under the Act and would, upon completion of the deregistration, no longer be subject to regulation as an investment company under the Act. Each investor in the SAGA Fund may redeem its interest on any day on which the New York Stock Exchange is open for trading.

3. As of December 14, 1998, applicant's assets totaled approximately U.S. $570 million and applicant had liabilities of approximately $6,600,000, consisting primarily of investment advisory fees, custodian and administrative charges, and legal and accounting expenses. Applicant intends to continue investing its assets primarily in equity securities of South African issuers.

Applicant's Legal Analysis

1. Section 8(f) of the Act provides that whenever the SEC, upon application or its own motion, finds that a registered investment company has ceased to be an investment company, the SEC shall so declare by order and upon the taking effect of such order, the registration of such company shall cease to be in effect.

2. Section 3(c)(1) of the Act provides that an issuer is not an investment company within the meaning of the Act if (a) its outstanding securities (other than short-term paper) are beneficially owned by not more than 100 persons, and (b) it is not making and does not presently propose to make a public offering of its securities.

3. Applicant states that it is not an investment company within the meaning of section 3(c)(1) of the Act because its outstanding securities are owned by fewer than 100 persons and it is not making and does not presently propose to make a public offering of its securities.

For the SEC, by the Division of Investment Management, under delegated authority.

Margaret H. McFarland,

Deputy Secretary.

[FR Doc 99–2000 Filed 1–27–99; 8:45 am]

BILLING CODE 8010–01–M

SECURITIES AND EXCHANGE COMMISSION

[Release No. 34–40956; File No. SR–Amex–98–48]

Self-Regulatory Organizations; Notice of Filing of Immediate Effectiveness of Proposed Rule Change by the American Stock Exchange LLC Relating to the Listing and Trading of Term Notes Linked to Select Sector SPDR℠

January 20, 1999.

Pursuant to Section 19(b)(1) of the Securities Exchange Act of 1934 [1] and Rule 19b–4 thereunder,[2] notice is hereby given that on December 21, 1998, the American Stock Exchange LLC (''Amex'' or ''Exchange'') filed with the Securities and Exchange Commission the proposed rule change as described in Items I, II, and III below, which Items have been prepared by the Amex. The Commission is publishing this notice to solicit comments on the proposed rule change from interested persons.

I. Self-Regulatory Organization's Statement of the Terms of Substance of the Proposed Rule Change

The Exchange seeks to list and trade term notes linked to Select Sector SPDR℠,[3] traded on the Amex (the ''Notes''). Each Note issuance will be linked to a separate Select Sector SPDR℠ approved for trading on the Amex. The text of the proposed rule change is available at the Office of the Secretary, Amex and at the Commission

II. Self-Regulatory Organization's Statement of the Purpose of, and Statutory Basis for, the Proposed Rule Change

In its filing with the Commission, the Amex included statements concerning the purpose of and basis for the proposed rule change and discussed any comments it received on the proposed rule change. The text of these statements may be examined at the places specified in Item IV below. The Amex has prepared summaries, set forth in sections A, B, and C below, of the most significant aspects of such statements.

A. Self-Regulatory Organization's Statement of the Purpose of, and the Statutory Basis for, the Proposed Rule Change

1. Purpose

The purpose of the proposed rule change is to permit the Amex to list term notes, each of which shall be separately linked to one of nine Select Sector SPDR℠ approved for trading on the Amex. Under Section 107A of the Amex *Company Guide*, the Exchange may approve for listing and trading securities which cannot be readily

[1] 15 U.S.C. 78s(b)(1).

[2] 17 CFR 240.19b–4.

[3] The Select Sector SPDRs℠, to which the Notes will be linked, comprise liquid and highly capitalized stocks included in the S&P® 500 Index. The nine Select Sector SPDRs℠ currently approved for trading on the Exchange are the Basic Industries, Consumer Services, Consumer Staples, Cyclical/Transportation, Energy, Financial, Industrial, Technology and Utilities Select Sector SPDRs℠. Each is offered by the Select Sector SPDRs℠ Trust (''Fund''), an open-end management investment company registered under the Investment Company Act of 1940 and has been approved for trading on the Amex pursuant to Amex Rules 1000A through 1003A (Index Fund Shares Rules). Securities Exchange Act Release No. 40749 (December 4, 1998), 63 FR 68483 (December 11, 1998). In addition, Select Sector SPDRs℠ may underlie options pursuant Securities Exchange Act Release No. 40157 (July 1, 1998), 63 FR 37426 (July 10, 1998).

categorized under the listing criteria for common and preferred stocks, bonds, debentures, or warrants.[4] Similar to other Exchange traded Index-linked Notes, the Amex represents that both the issues and the issuer will meet the general criteria set forth in Section 107A of the Amex *Company Guide*. Furthermore, the issuer will have a minimum tangible net worth in excess of $100,000,000 and otherwise substantially exceed the earnings requirements set forth in Section 101 of the Amex *Company Guide*.[5]

The Notes will be issued by Merrill Lynch & Co., Inc. (''Merrill'') and underwritten by Merrill Lynch Pierce Fenner & Smith Incorporated. The Notes will be senior, unsecured debt securities. Although a specific maturity date will not be established until the time of the offering, the Notes will provide for a maturity of between two and seven years from the date of issuance. Each note will provide for payment at maturity based in whole or in part on changes in the net asset value of the corresponding Select Sector SPDR℠. The Amex represents that Merrill will issue the Notes in various amounts, between $10 and $25 per unit, with aggregate offerings in an amount equal to between $15 and $100 million. The Amex represents that Merrill is currently undertaking to prepare a preliminary prospectus for the Notes which will be available for distribution to investors.

The Exchange believes the Notes are appropriately linked to Select Sector SPDRs℠ because Select Sector SPDRs℠ are open-ended investment companies. For this reason, the Exchange believes that any concerns with respect to potential manipulation or market impact upon settlement of the Notes at maturity are minimized. Similar to the exercise of an option overlying a Select Sector SPDR℠, which would require physical delivery of the underlying Select Sector SPDR℠, and as was discussed in the order approving the trading of options on Select Sector SPDRs℠[6] concerns with respect to potential manipulation or market impact upon settlement are minimized because Select Sector SPDRs℠ even though some or all of the necessary securities needed to be deposited are not available, the Exchange believes that the underlying Select Sector SPDRs℠ will be available in the secondary market upon settlement. Further, although there is no absolute assurance that market participants will create Select Sector SPDRs℠, it is likely that arbitrage opportunities will create an incentive to do so.

Surveillance procedures similar to those in place and used to surveil the trading in Merrill Lynch Euro Fund MITTS[7] (''Euro Fund MITTS'') will be used to surveil trading in the term notes linked to the various Select Sector SPDRs℠. Accordingly, the Exchange will monitor trading in the Notes and in the Select Sector SPDRs℠. And similar to the Euro Fund MITTS, if the Exchange detects unusual activity in the Select Sector SPDR℠ Notes, it will examine, if necessary, activity in the stocks held by the Select Sector SPDR℠ as well as the redemption activity in the Select Sector SPDR℠ itself. The net asset values of the Select Sector SPDRs℠ will be calculated continuously by Amex and disseminated every 15 seconds on Network B of the Consolidated Tape Association (''CTA''). As discussed in the order approving the trading of Select Sector SPDRs℠, Merrill currently has in place procedures to prevent the misuse of material, non-public information regarding changes to component stocks in the Select Sector SPDRs℠.[8]

Holders of the Notes will not receive any interest payments. However, holders of the Notes will receive at maturity settlement payment equal to the principal amount of the notes plus a ''Supplemental Redemption Amount'', based on the percentage increase in the Select Sector SPDR℠ from the starting value to the adjusted ending value. The starting value will equal the net asset value of the Select Sector SPDR℠ on or prior to the pricing date, the adjusted ending value will equal the average value of the Select Sector SPDR℠ on five consecutive trading days shortly prior to maturity, as reduced by an adjustment factor and as adjusted for certain anti-dilution events. The annual adjustment factor, generally in an amount between 0.5% and 3%, will be applied to the net asset value of the Select Sector SPDR℠ on a pro rata basis each day for purposes of determining the adjusted ending value. The actual adjustment factor will be determined on the pricing date. Upon maturity, at Merrill's option, the Notes will settle into either shares of the Select Sector SPDR℠ or cash. The exchange notes that the formula may produce a total return at maturity which is lower than the return a holder of the corresponding Select Sector SPDRs℠ might receive during the same period. At maturity, holders of the Notes will not receive less than 100% of the initial issue price.

Because the Notes are linked to a portfolio of equity securities, the Amex's existing equity floor trading rules and standard equity trading hours (9:30 a.m. to 4:00 p.m. Eastern Standard Time) will apply to the trading of the Notes. Pursuant to Amex Rule 411, the Exchange will impose a duty of due diligence on its members and member firms to learn the essential facts relating to every customer prior to trading the Notes. Further, pursuant to Amex Rule 462, the Notes will be subject to the equity margin rules of the Exchange. In addition, consistent with other structured products, the Exchange will distribute a circular to its membership, prior to the commencement of trading, providing guidance with regard to member firm compliance responsibilities, including appropriate suitability criteria and/or guidelines. The circular will state that before a member, member organization, or employee of such member organization undertakes to recommend a transaction in the security, such member or member organization should make a determination that the security is suitable for such customer and the person making the recommendation should have a reasonable basis for believing at the time of making the recommendation, that the customer has such knowledge and experience in financial matters that they may be capable of evaluating the risks and the special characteristics of the recommend transaction, including those highlighted, and is financially able to bear the risks of the recommended transaction. Lastly, as with other

[4] Securities Exchange Act Release No. 27753 (March 1, 1990), 55 FR 8626 (March 8, 1990). Section 107A of the Amex *Company Guide*, states that the Exchange will consider listing any security not otherwise covered by the Exchange's listing requirements, provided the security satisfies the following criteria: Assets/Equity—the issuer shall have assets in excess of $100 million and stockholders' equity of at least $10 million. In the case of an issuer which is unable to satisfy the earnings criteria set forth in Section 101 (*i.e.*, pre-tax income of $750,000 in its last fiscal year, or in two of its last three fiscal years and net income of at least $400,000), the Exchange generally will require the issuer to have either assets in excess of $200 million and stockholders' equity of at least $10 million or assets in excess of $100 million and stockholders' equity of at least $20 million; Distribution—minimum public distribution of 1,000,000 trading units with a minimum of 400 public shareholders, except, if traded in thousand dollar denominations, then no minimum number of holders; and Principal Amount/Aggregate Market Value—not less than $4 million.

[5] Section 101 of the Amex *Company Guide*, requires, among other things, that an issuer have stockholders' equity of at least $4 million and pre-tax income of $750,000 in its last fiscal year, or in two of its last three fiscal years.

[6] Supra note 3.

[7] Securities Exchange Act Release No. 40367 (August 26, 1998), 63 FR 47052 (September 3, 1998).

[8] Supra note 3.

structured products, the Exchange will closely monitor activity in the Notes to identify and deter any potential improper trading activity in the Notes.

2. Basis

The proposed rule change is consistent with Section 6(b)[9] of the Act in general and furthers the objectives of Section 6(b)(5)[10] in particular in that it is designed to prevent fraudulent and manipulative acts and practices, to promote just and equitable principles of change, to foster cooperation and coordination with persons engaged in facilitating transactions in securities, and to remove impediments to and perfect the mechanism of a free and open market and a national market system.

B. Self-Regulatory Organization's Statement on Burden on Competition

The Exchange does not believe that the proposed rule change will impose any burden on competition.

C. Self-Regulatory Organization's Statement on Comments on the Proposed Rule Change Received from Members, Participants or Others

No written comments were solicited or received with respect to the proposed rule change.

III. Date of Effectiveness of the Proposed Rule Change and Timing for Commission Action

The foregoing rule change has become effective pursuant to Section 19(b)(3)(A)[11] and Rule 19b–4(e)(6)[12] of the Act. The proposed rule change does not significantly affect the protection of investors or the public interest, does not impose any significant burden on competition; and does not become operative prior to 30 days after the date the proposed rule change was filed with the Commission.

Rule 19b–4(e)(6) also provides that the SRO provide the Commission with written notice of its intent to file the proposed rule change, along with a brief description and text of the proposed rule change, at least five business days prior to the date of filing the proposed rule change, or such shorter time as designated by the Commission. The Amex requested that the Commission waive the notification period in order to expedite the listing and trading of term notes linked to Select Sector SPDRs℠. The Commission finds good cause to waive the notification period because it previously reviewed and approved the composition and maintenance of the nine Select Sector SPDRs℠ underlying the term notes.[13]

At any time within 60 days of the filing of the proposed rule change, the Commission may summarily abrogate such rule change if it appears to the Commission that such action is necessary or appropriate in the public interest, for the protection of investors, or otherwise in the furtherance of the purposes of the Act.

IV. Solicitation of Comments

Interested persons are invited to submit written data, views and arguments concerning the foregoing, including whether the proposed rule change is consistent with the Act. Persons making written submissions should file six copies thereof with the Secretary, Securities and Exchange Commission, 450 Fifth Street, N.W., Washington, D.C. 20549. Copies of the submission, all subsequent amendments, all written statements with respect to the proposed rule change that are filed with the Commission, and all written communications relating to the proposed rule change between the Commission and any person, other than those that may be withheld from the public in accordance with the provisions of 5 U.S.C. 552, will be available for inspection and copying in the Commission's Public Reference Section, 450 Fifth Street, N.W., Washington, D.C. 20549. Copies of such filing will also be available for inspection and copying at the principal office of the Amex. All submissions should refer to file number SR–Amex–98–48 and should be submitted by February 18, 1999.

For the Commission by the Division of Market Regulation, pursuant to delegated authority.[14]

Margaret H. McFarland,

Deputy Secretary.

[FR Doc. 99–2003 Filed 1–27–99; 8:45 am]

BILLING CODE 8010–01–M

[9] 15 U.S.C. 78f.

[10] 15 U.S.C. 78f(b)(5).

[11] 15 U.S.C. 78s(b)(3)(A).

[12] 17 CFR 240.19b–4(e)(6).

[13] Supra note 3.

[14] 17 CFR 200.30–3(a)(12).

SECURITIES AND EXCHANGE COMMISSION

[Release No. 34–40951; File No. SR–CBOE–98–33]

Self-Regulatory Organizations; Chicago Board Options Exchange, Inc.; Order Approving Proposed Rule Change and Amendment No. 1 Thereto Relating to Exercise Advice Procedures

January 15, 1999.

I. Introduction

On July 27, 1998, the Chicago Board Options Exchange, Inc. (''CBOE'' or ''Exchange'') submitted to the Securities Exchange Commission (''SEC'' or ''Commission''), pursuant to Section 19(b)(1) of the Securities Exchange Act of 1934 (''Act'')[1] and Rule 19b–4 thereunder,[2] a proposed rule change. The Exchange proposes to clarify certain existing exercise procedures for cash-settled and noncash-settled options and to provide that the failure to submit an exercise advice in a timely manner will be designated as a minor rule violation subject to summary fines set forth in CBOE Rule 17.50. Amendment No. 1 was submitted to the Commission on November 3, 1998.[3] The proposed rule change was published for comment in the **Federal Register** on November 16, 1998.[4] The Commission received no comments on the proposal. This order approves the proposal, as amended.

II. Description of the Proposal

Restrictions on the Exercise of Cash-Settled Index Options

Currently, a cash-settled index option cannot be exercised during a trading delay, halt or suspension. This policy does not apply if the trading delay, halt, or suspension occurs on the last business day prior to expiration or if the President of the Exchange or his designee determines otherwise. The Exchange proposes to amend CBOE Rule 11.1.05 to codify this policy.[5] In

[1] 15 U.S.C. 78s(b)(1).

[2] 17 CFR 240.19b–4.

[3] Letter from Arthur B. Reinstein, Assistant General Counsel, CBOE, to Kelly McCormick, Attorney, Division of Market Regulation, SEC, dated October 27, 1998 (''Amendment No. 1''). Amendment No. 1 clarifies the Business Conduct Committee's authority to impose sanctions under proposed rules 17.50(c)(2) and (d)(2); makes technical corrections to the proposed rule language; clarifies amendments to proposed rules 11.1.05 and 11.1.07; and elaborates on the statutory basis for the proposed rule change.

[4] Exchange Act Release No. 40645 (November 6, 1998) 63 FR 63761 (November 16, 1998).

[5] The Exchange note that the restriction of the exercise of cash-settled index options is currently reflected in Exchange Regulatory Circular RG–91–11.

addition, the Exchange proposes to allow processing of an exercised cash-settled index option during a trading delay, halt, or suspension if it can be documented that the decision to exercise the option was made during an allowable time frame, before the delay, halt, or suspension. The Exchange proposes to codify this policy in proposed CBOE Rule 4.16(b), which is the general rule regarding exercise restrictions.[6]

Exercise Notice Procedures for Cash-Settled Index Options

CBOE Rule 11.1.03 currently requires members to notify the Exchange of certain exercise decisions concerning cash-settled index options and sets forth procedures for providing such notification. The Exchange proposes to amend CBOE Rule 11.1.03 that the rule only applies to American-style, cash-settled index options and dies not apply to European-style, cash settled index options.[7]

Exercise Notices Inconsistent with Just and Equitable Principles of Trade

Currently, CBOE Rule 11.1.07 states that submitting or preparing an exercise instruction after the exercise cutoff time for any expiring option on the basis of material information released after the cutoff time is inconsistent with just and equitable principles of trade. CBOE Rule 11.1.07 applies to expiring noncash-settled equity options. The Exchange has also considered preparing or submitting an exercise advice or advice cancel after the applicable deadline for any non-expiring American-style, cash-settled index option based on material information released after the deadline to be inconsistent with just and equitable principles of trade.

The Exchange believes this policy would be more effectively communicated to members if it is moved to proposed Rule 11.1.03(e), for American-style, cash-settled index options and repeated in proposed CBOE Rule 11.1.06(f) for noncash-settled equity options. By adding these new subdivisions, the Exchange believes members will be made aware of the policy without having to refer to other interpretations of the Rule.

Therefore, the Exchange proposes to add new paragraph (e) to Rule 11.1.03 to specify for non-expiring American-style, cash-settled index options that preparing or submitting an exercise advice or advice cancel after the applicable deadline on the basis of material information released after the deadline, in addition to constituting a violation of Rule 11.1, is an activity inconsistent with just and equitable principles of trade. Moreover, the Exchange proposes to add new paragraph (f) to CBOE Rule 11.1.06 to specify that preparing or submitting an exercise instruction, contrary exercise advice, or advice cancel after 4:30 p.m. Chicago Time on the basis of material information released after such time, in addition to constituting a violation of CBOE Rule 11.1, is an activity inconsistent with just and equitable principles of trade. Accordingly, the general provision currently found in CBOE Rule 11.1.07 will no longer be necessary and will be deleted.

Options Not Subject to Exercise by Exception

The Exchange proposes to clarify the requirements in CBOE Rule 11.1.06(c) which applies to exercise decisions and instructions for noncash-settled equity options that are not subject to the exercise by exception provisions of the Options Clearing Corporation's Rule 805. Proposed CBOE Rule 11.1.06(c) will clarify that a member must deliver to the Exchange, no later than 4:30 p.m. Chicago Time, each exercise instruction prepared, submitted, or accepted by the member for all noncash-settled equity options that are not subject to the automatic exercise procedures of exercise by exception. Proposed CBOE Rule 11.1.06(d) clarifies that a member is excused from compliance with the exercise instruction requirements if one of the exceptions set forth in CBOE Rule 11.1(b) applies and the member complies with Interpretation .01 of the Rule. Accordingly, the Exchange proposes to delete paragraphs (c)–(e) of CBOE Rule 11.1.06 and replace them with new paragraphs (c) and (d).

Other Clarifications

The Exchange also proposes to revise CBOE Rule 11.1.03(c) concerning the preparation of exercise advices before the purchase of American-style, cash-settled index option contracts to mirror the same provision that applies to noncash-settled equity options in CBOE Rule 11.1(d). In addition, the Exchange proposes to amend CBOE Rule 11.1 to accurately reference the definitions of preparation, submission and acceptance of exercise instructions. As amended, the Exchange believes the proposed rule reflects the different sources of exercise instructions (*i.e.*, Clearing Members prepare exercise instructions for proprietary accounts, members submit exercise instructions to Clearing Members, and members accept exercise instructions from customer accounts). Finally, the Exchange has corrected references to defined terms. For example, references to ''Member'' or ''Member Organization'' have been corrected to refer to the term member as defined in Section 1.1 of the Exchange Constitution.

Summary Fines for Failure to Submit an Exercise Advice

The Exchange proposes to make the failure to submit a contrary exercise advice, advice cancel, or exercise instruction in a timely manner pursuant to CBOE Rule 11.1.06, relating to the exercise or nonexercise of a noncash-settled equity option, a minor rule violation subject to the procedures and summary fine provisions of CBOE Rule 17.50. The Exchange proposes to add new paragraph (8) to CBOE Rule 17.50(g) to provide that any member that fails to follow the advice procedures in CBOE Rule 11.1.06 will be subject to summary fines specified in CBOE Rule 17.50. A member will receive a Letter of Information for the first infraction, in any twelve-month period. A member will receive a Letter of Caution for a second infraction, and for any subsequent infractions a member will receive a $500 fine.

Members will be able to contest a summary fine decision for violation of proposed CBOE Rule 17.50(g)(8). CBOE Rule 17.50(c)(1), which permits members to seek review by the Business Conduct Committee ('BCC''), has been amended to provide review of fines imposed under new paragraph (g)(8).

Calculation of Summary Fines for Failure to Submit Accurate Trade Information

CBOE Rules 17.50(g)(4)(b) and (5)(b) provide for the escalation of total fines for repeated violations of CBOE Rule 6.51. CBOE Rule 6.51 sets forth the reporting duties of members. The Exchange proposes to amend paragraphs (4)(b) and (5)(b) regarding the calculation of the total fine imposed on a member after 2 fines for failing to submit or report accurate trade information in any 18-month period. If a member incurs two fines under CBOE Rule 17.50(g)(4) or, similarly CBOE Rule 17.50(g)(5), in any 18-month period, any subsequent fine will be calculated by adding the amount of the fine assessed

[6] Proposed CBOE Rule 11.1.05 will also cross reference proposed CBOE Rule 4.16(b).

[7] The proposed rule does not apply to European-style options because European-style options cannot be exercised early. Moreover, their value is fixed on their expiration day and cannot be changed or effected by subsequent news. Therefore, the Exchange does not require exercise advices to be filed.

for the current violation to the amount of the next most recently incurred fine.[8]

The Exchange also proposes to amend CBOE Rule 17.50.03(a) to change from the fifth day of the month to the tenth day of the month the date by which the Exchange shall attempt to serve members who incur fines under CBOE Rule 17.50(g)(4) or (g)(5). The proposed rule change also amends the day by which a member may request verification of the fine from the Exchange. The member will now have to make such a request by the twenty-fifth of the month instead of the twentieth of the month, as currently required. The Exchange believes these changes will provide more time to process the fines at the beginning of the month while preserving the current time period by which a member may request verification of the fines.

Exchange Discretion to Bring Disciplinary Action

The Exchange is proposing to modify the summary fine appeal provisions found in CBOE Rule 17.50(c)(2) and (d)(2). The Exchange proposes to clarify the BCC's and the Appeals Committee's authority to impose sanctions in an appeal of a minor rule violation. The appellate panel must determine that the conduct serving as the basis for the action under review is in fact a violation of an Exchange rule before a sanction may be imposed. The BCC and the Appeals Committee, however, may only review the alleged conduct to determine if the conduct violates the rule charged and appealed. If the alleged conduct would constitute a violation, the BCC or the Appeals Committee could determine that the conduct at issue did not rise to the level that would trigger a summary fine but was, nonetheless, in violation of the Exchange Rule alleged to have been violated. In such a case, the BCC or the Appeals Committee could impose a disciplinary sanction for the violating conduct as part of its decision concerning the summary fine appeal.

The Exchange also proposes to modify CBOE Rule 17.50(f) the conform it to a rule of the Chicago Stock Exchange.[9] Proposed CBOE Rule 17.50(f) has been amended to clarify that the Exchange has the discretion not to issue a summary fine under CBOE Rule 17.50 in appropriate circumstances such as when extenuating circumstances exist or when no remedial purpose would be served by the issuance of the fine. In addition, the Exchange would have the discretion to commerce a formal disciplinary proceeding under CBOE Rule 17.2 whenever the Exchange determines that a rule violation is not minor in nature.

The Exchange proposes to implement the proposed rule change within 45 days after its approval by the Commission. The Exchange notes the reason for the time interval is to give the Exchange the opportunity to inform members in the Exchange's Regulatory Bulletin before the changes are put into effect. The Exchange proposes to publish the effective date in the Exchange's Regulatory Bulletin and will notify the Commission of the effective date by letter.

III. Discussion

After careful review, the Commission finds that the proposed rule change is consistent with the requirements of the Act and the rules and regulations thereunder applicable to a national securities exchange.[10] In particular, the Commission finds that the proposed rule change is consistent with the requirements of Sections 6(b)(5) and 6(b)(6)[11] of the Act.

Section 6(b)(5) of the Act[12] provides, among other things, that the rules of an exchange be designed to promote just and equitable principles of trade, to prevent fraudulent and manipulative acts and practices, to foster cooperation and coordination with persons engaged in regulating, clearing, and settling securities transactions, and to protect investors and the public interest. The proposed rule change clarifies and codifies options exercise procedures and the disciplinary procedures for certain violations. By clarifying and codifying these procedures, the Exchange provides notice of Exchange rules, which should discourage fraudulent and manipulative acts and practices and facilitate Exchange members' compliance with exercise procedures.

The proposed rule change further clarifies and classifies the exercise procedures for both cash-settle index options and noncash-settled equity options. The proposed rule change further clarifies the appropriate rules for each type of product by expressly stating the procedures and policies applicable to each type of product under independent subsections. For example, the exercise rules for American-style cash-settled index options, found in CBOE Rule 11.1.03(d), have been amended to reflect the policy that an exercise advice may not be prepared before the purchase of the option contract. This amendment mirrors the same provision found in CBOE Rule 11.1(d), which applies to noncash-settled equity options. By further grouping these rules together based upon the type of product, members will have a clearer picture of applicable exercise procedures, which should prevent fraudulent and manipulative acts and practices and thereby foster investor protection.

The mandates of Section 6(b)(5) are also furthered because the proposed rule change clarifies that submitting or preparing an exercise instruction for either non-expiring American-style, cash-settled index options or expiring noncash settled equity options on the basis of material information released after the cutoff time is inconsistent with just and equitable principles of trade. This policy will now be found in proposed CBOE Rule 11.1.03(e), for American-style, cash-settled index options and repeated in proposed CBOE Rule 11.1.06(f). The policy ensures that options are exercised justly and equitably by preventing the improper use of material information.

The Commission also finds that the proposed rule change is consistent with the requirements of Section 6(b)(6) of the Act,[13] which requires that members shall be appropriately disciplined for violation of the provisions of the Act, the rules and regulations thereunder, or the rules of the exchange. The Exchange proposes to make the failure to submit a contrary exercise advice, advice cancel, or exercise instruction in a timely manner pursuant to CBOE Rule 11.1.06, relating to the exercise or nonexercise of a noncash-settled equity option, a minor rule violation subject to the procedures and summary fine provisions of CBOE Rule 17.50. By making the violation of CBOE Rule 11.1.06 a minor rule violation, members will be appropriately disciplined in a

[8] The Exchange provided the following example: In January, Member XYZ incurs a fine of $100 under CBOE Rule 17.50(g)(4) for violation of CBOE Rule 6.51 (based on the percentage of times that the member submitted inaccurate or no transaction times). In February, Member XYZ incurs a second fine under CBOE Rule 17.50(g)(4) and the appropriate fine is deemed to be $250. In March, Member XYZ incurs a third fine for $100 and, pursuant to CBOE Rule 17.50(g)(4)(b), must pay a total fine of $350, which is calculated by adding the third fine incurred ($100) to the next most recently incurred fine ($250). In April, Member XYZ incurs a fourth fine of $250 and, pursuant to CBOE Rule 17.50(g)(4)(b), must pay a total of $600 calculated by adding the fourth fine ($250) to the total fine most recently incurred ($350).

[9] *See* Exchange Act Release No. 37255 (May 30, 1996) 61 FR 28918 (June 6, 1996) (approving Chicago Stock Exchange Article XII, Rule 9).

[10] In reviewing this proposal, the Commission has considered the proposed rule's impact on efficiency, competition, and capital formation. 15 U.S.C. 78c(f).

[11] 15 U.S.C. 78f(b)(5); 15 U.S.C. 78f(b)(6)

[12] 15 U.S.C. 78f(b)(5).

[13] 15 U.S.C. 78f(b)(6).

timely manner, which should quickly prevent future violations. Members should not be prejudiced by the rule because their right of review by the BCC remains intact.

The proposed CBOE Rules 17.50(c)(2) and (d)(2) are also consistent with the disciplinary requirements of Section 6(b)(6). These provisions are amended to reflect the BCC's and the Appeals Committee's authority to review conduct and impose sanctions during a summary fine appeal. If the BCC or the Appeals Committee determines that a member's conduct is in violation of the Exchange rule alleged to have been violated, either appellate panel has the authority to impose sanctions even if the conduct does not rise to the level of triggering a summary fine. The Exchange explained that it believes these appellate panels have the authority to impose alternate sanctions even if the conduct does not reach the level to trigger a summary fine.[14] The BCC and the Appeals Committee are, however, limited to reviewing the alleged conduct as it refers to the rule originally charged and appealed and to imposing sanctions for violations found of such rule. The Commission believes that these rules are designed to appropriately and fairly discipline members of violations of Exchange rules. The proposed rule change should ensure that members who repeatedly commit minor violations will not be able to avoid discipline. Moreover, the proposed rule protects members by limiting the appellate panel to review the member's conduct as it relates to violations of the rule originally charged and appealed.

IV. Conclusion

It is therefore ordered, pursuant to Section 19(b)(2) of the Act,[15] that the proposed rule change (SR–CBOE–98–33) is approved, as amended.

For the Commission, by the Division of Market Regulation, pursuant to delegated authority.[16]

Margaret H. McFarland,

Deputy Secretary.

[FR Doc. 99–2001 Filed 1–27–99; 8:45 am]

BILLING CODE 8010–01–M

[14] *See* CBOE Rule 17.50(f), which provides that the Exchange may, whenever it determines that any violation is not minor in nature, proceed under CBOE Rule 17.2.

[15] 15 U.S.C. 78s(b)(2).

[16] 17 CFR 200.30–3(a)(12).

SECURITIES AND EXCHANGE COMMISSION

[Release No. 34–40957; File No. SR–CBOE–98–53]

Self-Regulatory Organizations; Notice of Filing of Proposed Rule Change by the Chicago Board Options Exchange, Inc. To Amend the Firm Quote Requirement

January 20, 1999.

Pursuant to Section 19(b)(1) of the Securities Exchange Act of 1934 (''Act''),[1] notice is hereby given that on December 15, 1998, the Chicago Board Options Exchange, Inc. (''CBOE'' or ''Exchange'') filed with the Securities and Exchange Commission (''Commission''), the proposed rule change as described in Items I, II, and III below, which Items have been prepared by the CBOE. The Commission is publishing this notice to solicit comments on the proposed rule change from interested persons.

I. Self-Regulatory Organization's Statement of the Terms of Substance of the Proposed Rule Change

The Exchange proposes to amend its firm quote rule, Rule 8.51, and Interpretation and Policy .04 to Rule 6.8, to amend the firm quote requirement so that it is equal to the RAES contract limit applicable to that class of options. Rule 8.51 also will allow the appropriate Floor Procedure Committee (''FPC'') to establish a different requirement for a particular class of options that is no less than the RAES contract limit and no more than fifty (50) contracts to enable the FPC to deal with specific circumstances of trading in a particular options class. For classes or series that are not traded on RAES, the appropriate FPC would be able to establish a firm quote requirement of between ten (10) and fifty (50) contracts. The text of the proposed rule change is available at the Office of the Secretary, CBOE and at the Commission.

II. Self-Regulatory Organization's Statement of the Purpose of, and Statutory Basis for, the Proposed Rule Change

In its filing with the Commission, the CBOE included statements concerning the purpose of, and basis for, the proposed rule change and discussed any comments it received on the proposed rule change. The text of these statements may be examined at the places specified in Item IV below. The CBOE has prepared summaries, set forth in sections A, B, and C below, of the most significant aspects of such statements.

[1] 15 U.S.C. 78s(b)(1).

A. Self-Regulatory Organization's Statement of the Purpose of, and Statutory Basis for, the Proposed Rule Change

1. Basis

The Exchange proposes to amend its firm quote requirement to allow the appropriate FPC to establish the requirement for each particular class of options. Generally, the firm quote requirement will be equal to the RAES contract limit applicable to that class of options. The firm quote requirement will apply at all times, except during a trading rotation, and obligates a trading crowd to sell (buy) the established number of contracts at the offer (bid) which is displayed when a buy (sell) customer order reaches the trading station where the particular option class is located for trading. Currently, paragraph (a)(2) of Rule 8.51 requires trading crowds to buy (sell) at least ten (10) contracts under these circumstances.

Because RAES is essentially a form of electronic firm quote, the Exchange believes that in most cases, the firm quote requirement should be no less than the RAES contract limit for a particular options class. In fact, in deciding to raise the firm quote requirement, the Exchange noted that the appropriate FPC responsible for setting the contract limit for RAES in particular option classes recently increased the RAES maximum contract size, such that in most cases the RAES contract limit is now higher than the firm quote requirement.[2] Additionally, the CBOE proposes to allow the appropriate FPC, in its discretion, to establish a different firm quote requirement for a particular class of options that is no less than the RAES contract limit and no more than fifty (50) contracts. This provision would enable the appropriate FPC to deal with the specific circumstances of trading in a particular option class. For classes or series that are not traded on RAES, the appropriate FPC would be able to establish a firm quote requirement of between ten (10) and fifty (50) contracts.[3]

[2] *See* Regulatory Circulars RG98–102, RG98–117, RG98–119.

[3] The new firm quote requirement will remain in effect for that options class indefinitely or until the FPC changes it. The FPC meets once every two weeks. The discretion given by the proposed rule change is intended to enable the FPC to respond to general trading trends in a given options class. Phone call between Timothy Thompson, Director, Regulatory Affairs, Legal Department, CBOE, Sonia

Continued

Exchange Rule 8.51 will continue to provide that the appropriate Market Performance Committee may determine the classes and series that will be subject to the requirements of the Rule. The CBOE also is amending Interpretation and Policy .06 to Rule 8.51 to clarify that the firm quote requirement for spreads and straddles applies only in equity options. The CBOE notes that issue was clearly stated in rule filing SR–CBOE–94–54 and in the Commission's order approving that filing.[4] However, the rule language itself is not clear on this point. Thus, the CBOE is making this change to clarify in the rule text what was originally intended by that rule filing.

2. Statutory Basis

The Exchange believes that by raising the firm quote requirement, the proposed rule change will increase the liquidity of the affected option classes such that it is consistent with and furthers the objectives of Section 6(b) of the Act,[5] in general, and furthers the objectives of Section 6(b)(5),[6] in particular, in that it removes impediments to a free and open market and protects investors and the public interest.

B. Self-Regulatory Organization's Statement on Burden on Competition

The CBOE does not believe that the proposed rule change will impose any burden on competition.

C. Self-Regulatory Organization's Statement on Comments on the Proposed Rule Change Received From Members, Participants, or Others

The Exchange did not solicit or receive written comments with respect to the proposed rule change.

III. Date of Effectiveness of the Proposed Rule Change and Timing for Commission Action

Within 35 days of the date of publication of this notice in the **Federal Register** or within such longer period (i) as the Commission may designate up to 90 days of such date if it finds such longer period to be appropriate and publishes its reasons for so finding or (ii) as to which the self-regulatory organization consents, the Commission will:

(a) by order approve proposed rule change, or

(b) institute proceedings to determine whether the proposed rule change should be disapproved.

IV. Solicitation of Comments

Interested persons are invited to submit written data, views and arguments concerning the foregoing, including whether the proposed rule change is consistent with the Act. Persons making written submissions should file six copies thereof with the Secretary, Securities and Exchange Commission, 450 Fifth Street, N.W., Washington, D.C. 20549. Copies of the submission, all subsequent amendments, all written statements with respect to the proposed rule change that are filed with the Commission, and all written communications relating to the proposed rule change between the Commission and any person, other than those that may be withheld from the public in accordance with the provisions of 5 U.S.C. 552, will be available for inspection and copying in the Commission's Public Reference Room, in Washington, D.C. Copies of such filing will also be available for inspection and copying at the principal office of the CBOE. All submissions should refer to File No. SR–CBOE–98–53 and should be submitted by February 18, 1999.

For the Commission, by the Division of Market Regulation, pursuant to delegated authority.[7]

Margaret H. McFarland,

Deputy Secretary.

[FR Doc. 99–2002 Filed 1–27–99; 8:45 am]

BILLING CODE 8010–01–M

Patton, Attorney, Division of Market Regulation, Commission, and Constance Kiggins, Special Counsel, Division of Market Regulation, Commission, on January 6, 1999.

[4] Securities Exchange Act Release No. 35785 (May 31, 1995), 60 FR 30125 (June 7, 1995).

[5] 15 U.S.C. 78f(b).

[6] 15 U.S.C. 78f(b)(5).

[7] 17 CFR 200.30–3(a)(12).

TENNESSEE VALLEY AUTHORITY

North Alabama Pipeline Crossing of the Tennessee River and Use of Transmission Line Right-of-Way, Cullman, Limestone, and Morgan Counties, Alabama

AGENCY: Tennessee Valley Authority (TVA).

ACTION: Record of Decision and Adoption of Final Environmental Impact Statement for the North Alabama Pipeline Project and the Final Supplement to the Final Environmental Impact Statement for the Amended North Alabama Pipeline Project prepared by the Federal Energy Regulatory Commission (FERC).

SUMMARY: This notice is provided in accordance with the Council on Environmental Quality (CEQ) regulations (40 CFR 1500 to 1508) and TVA procedures implementing the National Environmental Policy Act.

TVA has decided to concur with a right-of-way permit issued by the U.S. Fish and Wildlife Service (FWS) for crossing of the Wheeler National Wildlife Refuge in Limestone and Morgan Counties, Alabama. TVA also may have to make a decision on requests made by the Southern Natural Gas Company (hereinafter ''Southern'') for use of TVA's existing rights of way along the Trinity-Cullman and Huntsville-Decatur transmission lines in Cullman, Limestone, and Morgan Counties, Alabama. The environmental impacts of the North Alabama Pipeline Project were assessed in a 1997 Environmental Impact Statement (EIS) and 1998 Supplemental EIS prepared by FERC. TVA was a cooperating agency in the preparation of the above two EISs. Under 40 CFR 1506.3(c) of the CEQ Regulations, TVA has independently reviewed the two EISs prepared by the Federal Energy Regulatory Commission and found them to be adequate, and is herewith adopting them. TVA has also determined that the alternatives considered in the two EISs and the decisions based on them will fulfill the requirements of sections 101 and 102(1) of the National Environmental Policy Act.

FOR FURTHER INFORMATION CONTACT: Harold M. Draper, NEPA Specialist, Environmental Management, Tennessee Valley Authority, 400 West Summit Hill Drive, WT 8C, Knoxville, Tennessee 37902–1499; telephone (423) 632–6889 or e-mail hmdraper@tva.gov.

SUPPLEMENTARY INFORMATION:

Background

On January 25, 1996, Southern filed an application with FERC for a Certificate of Public Convenience and Necessity under the Natural Gas Act for authorization to construct, own, and operate a new natural gas pipeline between Tuscaloosa and Huntsville within the state of Alabama. The proposed pipeline would serve Huntsville (AL) Utilities, Decatur (AL) Utilities, Marshall County (AL) Gas District, Dekalb-Cherokee Counties (AL) Gas District, and Austell (GA) Gas System. Huntsville and Decatur would be new customers of Southern. In order to provide gas service to Huntsville, Southern needs to cross the Tennessee River on lands formerly owned by TVA and transferred to the U.S. Fish and Wildlife Service (FWS) for the Wheeler

National Wildlife Refuge. TVA needs to concur in FWS's right-of-way permit. In addition, TVA may need to approve Southern's request to use TVA transmission line right of ways between Trinity and Cullman (pipeline mileposts 84 to 92) and between Huntsville and Decatur (pipeline mileposts 115 to 120).

FERC issued a certificate for the proposed route on May 30, 1997. The approved crossing of the Tennessee River and Wheeler National Wildlife Refuge System lands was called the Triana Variation and was located at Tennessee River Mile (TRM) 321. Subsequently, FWS informed Southern that it would prefer a different route for the pipeline to cross the refuge. Southern filed an application for an amended certificate, and this was granted by FERC on October 28, 1998. The revised approved route, called the I–65 Alternative, Variation Number 3, crosses the Tennessee River at TRM 309.5 and also follows the TVA Decatur to Huntsville transmission line in Limestone County. The revised pipeline route would extend 113 miles between Tuscaloosa and Huntsville. FWS issued a National Wildlife Refuge System compatibility determination and right-of-way permit on January 15, 1999. FWS has requested that TVA concur with its right-of-way permit.

FERC issued a Notice of Intent to Prepare an EIS on February 26, 1996. A public scoping meeting was held on April 1, 1996. A Draft EIS (DEIS) was issued in March 1997. Comments were received at public hearings on April 2, 1997 at Cordova, Alabama and on April 3, 1997 at Hartselle, Alabama. A total of 149 public hearing comments and letters were received. As a cooperating agency, TVA commented on the DEIS. A Final EIS, including responses to the comments received, was issued in May 1997. Subsequent to the decision of FERC, one of the cooperating agencies, FWS, informed Southern that it would prefer that the Tennessee River be crossed at an existing utility or highway corridor, if such a corridor could be directionally drilled. FWS requested that existing corridors be tested before a crossing would be considered at the certificated route (Tennessee River Mile 321). Southern subsequently tested the I–65 corridor and determined that a directional drill was feasible. Accordingly, Southern requested a certificate for an alternative route (the I–65 Alternative). FERC issued a Draft Supplemental EIS (DSEIS) on the I–65 Alternative in June 1998. A total of 16 letters were received and 25 public hearing statements were recorded at a public hearing on July 30, 1998 in Hartselle, Alabama. As a cooperating agency, TVA commented on the DSEIS. A Final Supplemental EIS, including responses to the comments received, was issued in October 1998.

Alternatives Considered

The EIS and SEIS prepared by FERC considered use of other pipeline systems (System Alternatives), Major Route Alternatives, and minor variations of each major route alternative, in addition to No Action. For the proposed crossing of the Tennessee River (the action that requires TVA concurrence), FERC, FWS, and TVA considered two alternatives in detail, Action and No Action. In addition, three minor variations of the action alternative (designated Variation Numbers 1, 2 and 3) were analyzed in detail. The proposed I–65 Alternative (Action Alternative) would follow Interstate 65 and cross the former TVA land now in the Wheeler National Wildlife Refuge for 2.7 miles (70 to 90 foot wide construction right-of-way). The Tennessee River crossing would be at Tennessee River Mile (TRM) 309.5, on the west side of I–65. The river crossing would be underground and would involve a directional drill.

Variation Number 1 would cross the Tennessee River on the east side of I–65 and would be further from residences. Variation Number 2 would be north of the Tennessee River in Limestone County, Alabama, and would follow an existing TVA power line and pipeline rights of way to avoid the crossing of forested wetlands associated with Beaverdam Creek. Variation Number 3 would also be north of the Tennessee River in Limestone County, and would follow an existing TVA power line and Old Highway 20. It also would avoid forested wetlands associated with Beaverdam Creek.

Several alternatives were considered but not analyzed in detail. The White Springs Power Line Alternative would follow an existing power line and would cross at TRM 307.5, involving 2.85 miles of former TVA land in Wheeler National Wildlife Refuge and 1.1 miles of former TVA land now in Point Mallard City Park. The crossing of the Tennessee River and Flint Creek would be by open trench construction. Open trench construction would have potential impacts on endangered and threatened species. Because this alternative would have greater land requirements and would involve open trench construction of the Tennessee River, this alternative did not offer any environmental advantages that would merit detailed analysis.

The Hudson Bridge Alternative would involve a crossing of the Tennessee River at TRM 305. The crossing would be adjacent to the U.S. 31 bridge (Hudson Bridge) crossing. This route would involve crossing 2.7 miles of former TVA land and extensive urban area construction, in addition to major open cut crossings of the Tennessee River and Flint Creek. Because of the greater impact on densely populated areas and the required open cut of the Tennesssee River, this alternative did not offer any environmental advantages that would merit detailed analysis.

The Hartselle Alternative would involve crossing 0.8 miles of former TVA land and 3 miles of current TVA land in the Swan Creek Wildlife Management Area. It would also involve extensive urban area construction, in addition to major open cut crossings of the Tennessee River and Flint Creek. Because this alternative was twice as long as the proposed route and would require open cut construction of the Tennessee River, this alternative did not offer any environmental advantages that would merit detailed analysis.

On October 28, 1998, FERC issued an order amending the certificate for the North Alabama Pipeline Project. The certificate authorized Southern to construct the pipeline along the I–65 alternative and variation number 3.

Decision: TVA has decided to concur with the FWS right-of-way easement allowing Southern to implement the I–65 Alternative, Variation Number 3. In addition, TVA may also have to make a decision on any request made by Southern to use TVA's Decatur to Huntsville transmission line right-of-way in Limestone County (pipeline mileposts 115 to 120) and its Trinity to Cullman transmission line right-of-way in Cullman and Morgan Counties (pipeline mileposts 84 to 92). In making these decisions, TVA has carefully considered the environmental impacts of a new pipeline corridor across the Tennessee River as well as the comments of those who oppose the pipeline for environmental and other reasons. TVA believes that with the choice of the I–65 crossing, the use of directional drill, and the selection of variation Number 3 which avoids forested wetlands, the environmental impacts of the proposal have been reduced to insignificant levels.

Environmentally Preferable Alternative

Of the alternatives discussed in the EIS and SEIS, TVA has determined that the No Action alternative would be environmentally preferable. It would not, however, accomplish the applicant's and FERC's goals of supplying additional natural gas at competitive rates to Huntsville Utilities,

Decatur Utilities, Marshall County (AL) Gas District, Dekalb-Cherokee Counties (AL) Gas District, Austell (GA) Gas System, or Cartersville (GA) Utilities.

Environmental Consequences and Commitments

As a long, linear pipeline, the project generally follows existing rights of way. About 40 percent of the proposed route is unforested and would revert to its previous open land uses after pipeline construction. However, forested lands would be cleared and maintained in an unforested condition by the company through periodic maintenance activities. Forested wetlands would be cleared in several places along the 122-mile pipeline route. Approximately 37.67 acres of forested wetlands would be cleared in Tuscaloosa, Fayette, Walker, Cullman, Morgan, and Limestone Counties of Alabama. Of this, 24.22 acres would be permanently maintained as cleared right-of-way. FWS and FERC have adopted mitigation measures to avoid or minimize environmental harm. TVA believes that the measures required by FERC in its October 28, 1998 order would substantially reduce the environmental impacts of this project. These include detailed construction Best Management Practices, use of environmental inspectors, completion of compliance with Section 106 of the National Historic Preservation Act, and surveys of caves for Indiana and gray bats. Southern will comply with the following measures:

- In order to compensate for temporary and permanent wetland impacts, Southern will purchase 185 acres of drained wetland in Limestone County, Alabama (known as the Devaney Tract) adjacent to the Wheeler National Wildlife Refuge and deed the tract to the FWS. The FWS would restore wetland hydrology to approximately 105 acres and plant hardwood trees on remaining acreage.
- Southern will comply with measures required by FERC's Order Amending Certificate and Denying Stay and Rehearing of October 28, 1998 (Docket Nos. CP96–153–002, 003 and 004) and FERC's May 30, 1997 Order Issuing Certificate and Denying Rehearing (Docket Nos. CP96–153–000 and 002).

Dated: January 19, 1999.

Kathryn J. Jackson,

Executive Vice President, Resource Group.

[FR Doc. 99–2043 Filed 1–27–99; 8:45 am]

BILLING CODE 8120–08–U

DEPARTMENT OF TRANSPORTATION

Federal Aviation Administration

Notice of Availability of Final Environmental Impact Statement for Terminal Doppler Weather Radar To Serve John F. Kennedy International and LaGuardia Airports, New York, New York

AGENCY: Federal Aviation Administration (FAA), DOT.

ACTION: Notice of availability.

SUMMARY: In accordance with requirements of the National Environmental Policy Act of 1969, as Amended, and FAA order 1050.ID—Policies and Procedures for Considering Environmental Impacts, the FAA announces the availability of a Final Environmental Impact Statement (EIS) for terminal Doppler weather radar to Serve John F. Kennedy International and LaGuardia Airports, New York, New York. The Final EIS provides responses to comments on the Draft EIS received in written form or in oral presentations at five official public hearings held during the public review period for the Draft EIS. The text and figures of the Draft EIS have been revised as necessary to provide information and analyses requested by comments from the public. The Final EIS is a comprehensive document containing the contents of the Draft EIS, as revised, copies of all comment letters received during the public review period, transcripts of the five public hearings, and the FAA's official responses to those comments. A copy of the Final EIS will be mailed to all parties who received the Draft EIS directly from the FAA and all additional parties who requested a copy of the document. The Final EIS is available for review at FAA Headquarters in Washington, DC, and libraries of the potentially affected area in New York City. A copy of the Final EIS may be obtained from the FAA through request to the contact listed below.

In accordance with regulations at 40 Code of Federal Regulations 1506.10(b)(2), the FAA's decision on whether to proceed with the proposed action will not be made or recorded until the appropriate time. At the time such decision is made, the FAA will release a Record of Decision with that information.

FOR FURTHER INFORMATION CONTACT: Jerome D. Schwartz, Environmental Lead for TDWR, AND–402, Federal Aviation Administration, 800 Independence Avenue, SW, Washington, DC 20591, telephone (202) 267–9841.

Issued in Washington, DC on January 20, 1999.

James C. Link,

Acting Leader, Integrated Product Team For Surveillance, AND–400.

[FR Doc. 99–2022 Filed 1–27–99; 8:45 am]

BILLING CODE 4910–13–M

DEPARTMENT OF TRANSPORTATION

Federal Highway Administration

National Highway Traffic Safety Administration

Ocular-based Measures of Driver Alertness; Notice of Conference and Request for Submissions

AGENCY: Federal Highway Administration (FHWA), DOT.

ACTION: Notice of conference and request for submissions.

SUMMARY: This notice is both an invitation to participate in a conference addressing ocular-based measures of driver alertness and a request for submissions to be presented/demonstrated at the conference. The conference is being sponsored by the FHWA's Office of Motor Carriers and the National Highway Traffic Safety Administration's (NHTSA) Office of Vehicle Safety Research (formerly, the Office of Crash Avoidance). The purpose of the conference is to (1) share recent FHWA/NHTSA findings regarding the validity of eye-based measures of driver alertness, (2) share recent FHWA and NHTSA technology developments in this area, (3) identify and provide information about other Research and Technology (R&T) studies relevant to in-vehicle alertness monitoring, (4) review the overall state-of-the-art of in-vehicle alertness monitoring, (5) review concepts for feedback of alertness information to drivers and other proposed features of the driver-vehicle interface, and (6) review concepts for the successful and user-acceptable introduction of in-vehicle alertness monitoring systems to commercial motor carrier fleets.

DATES: The conference will be held on April 26–27, 1999. Each day's session will begin at 9 a.m. and end at 5 p.m. Papers and technology demonstration proposals/abstracts must be received on or before March 1, 1999.

ADDRESSES: The conference will be held at the Hyatt-Dulles Hotel, 2300 Dulles Corner Boulevard, Herndon, Virginia.

FOR FURTHER INFORMATION CONTACT: For conference information and to obtain

registration materials, contact Ms. Annette Smith, Portfolio Management Group, Ltd., 8513 Ashwood Drive, Capitol Heights, MD 20743; Telephone: (301) 499–4936; FAX: (301) 499–1405; E-mail: portmgmt@erols.com. Paper and technology demonstration proposals should be submitted to Robert J. Carroll, Office of Motor Carrier Research and Standards (HCS–30), Federal Highway Administration, 400 Seventh Street, SW., Washington, DC 20590; Telephone: (202) 366–9109; FAX: (202) 366–8842; E-mail: robert.carroll@fhwa.dot.gov.

SUPPLEMENTARY INFORMATION: From 1997–1998, the Intelligent Transportation Systems/Commercial Vehicle Operations Division of the FHWA's Office of Motor Carriers funded a program, which was managed by the NHTSA's Office of Crash Avoidance Research, to study competing fatigue detection technologies. Under the program, the University of Pennsylvania (UPENN) conducted laboratory experiments to evaluate the validity, sensitivity, and reliability of selected personal (psychophysiological) fatigue-detection devices and measures. The study evaluated eye closure measures such as PERCLOS, a measure of eyelid droop identified in earlier NHTSA research as being a promising index of fatigue. PERCLOS is defined as the percent of time eyelids are closed 80% or more—a measure found to be significantly correlated with driver fatigue. Other psychophysiological measures assessed included two eye-blink measures, two electroencephalograph (EEG) measures, and a head movement detector. All measures had some validity, but the results corroborated most strongly the validity of PERCLOS. The final report, ''Evaluation of Techniques for Ocular Measurement,'' DOT–HS–808 762, is available through the National Technical Information Service, telephone (703) 605–6000 or (800) 553–6847. The FHWA and the NHTSA believe that the PERCLOS measure is one of the most promising known real-time indicators of driver alertness for in-vehicle systems. Laboratory-based studies of the driver-vehicle interface for a PERCLOS-based in-vehicle alertness monitoring system are currently underway. This Intelligent Vehicle Initiative (IVI)-funded project is being managed by the NHTSA's Office of Crash Avoidance Research and is a follow-up to the PERCLOS validation study. Under the program, UPENN is conducting laboratory experiments to evaluate the effectiveness of various potential elements of the driver-vehicle interface (DVI) of in-vehicle CMV driver alertness monitoring devices. Also, under this program, Carnegie Mellon Research Institute has developed, and is testing, a new camera and related software that can monitor and analyze a driver's PERCLOS in real-time. Other DVI components to be assessed include real-time gauges, informational alarms/warnings, and alerting stimuli. The study will make recommendations regarding optimal DVI design elements for CMV driver alertness monitors. This new study will be completed in the Spring of 1999 and reported at the conference. This technical conference/workshop is planned to discuss recent scientific validation findings regarding PERCLOS and other eye activity measures as metrics of alertness, and the status of efforts to develop in-vehicle sensors to continuously measure PERCLOS as an indicator of driver alertness (i.e., develop an ''alertometer''). The conference will also address the potential and appropriate uses of ''alertometer'' data and ways to ensure the active participation and acceptance of drivers and management in the use of such technologies. Since the PERCLOS measure will likely be a key metric employed in any operational test of alertness monitoring technology, the workshop will also provide an update of the FHWA's plans for implementing the IVI operational tests, as described above.

Due to limited seating, early registration is encouraged. The registration fee is $150. The registration fee for full-time students is $100. Those registering before March 1, 1999 may pay an early registration fee of $100 ($75 for full-time students). Full refund of registration fees will be made for cancellations received by April 15, 1999. Refunds of 75 percent of the registration fee will be made for cancellation notices received after April 15, 1999. Persons interested in attending, presenting papers, and/or demonstrating relevant technologies are invited to obtain registration materials and submit papers or technology demonstration proposals, in accordance with the criteria set forth below.

To be accepted for presentation, papers proposing methods of alertness measurement should describe how the measure/method meets one of the following three criteria for continuous, in-vehicle driver alertness monitoring, regardless of the technology used:

(1) Provide continuous, in-vehicle driver-alertness monitoring, using the PERCLOS measure.

(2) Be highly correlated with the PERCLOS.

(3) Have gone through a validation process similar to the PERCLOS validation.

Technologies proposed for demonstration at the conference will be evaluated with respect to their validity in measuring driver alertness, their reliability/durability for in-vehicle operation, and their current or potential cost of production and integration in vehicle operations. Interested parties are instructed to request a registration packet and submit a 300–500 word abstract, describing the paper or technology demonstration proposed for presentation at the conference. The abstracts related to technology demonstrations should include a description of the technology, including its major components, functional basis (i.e., what it measures), how it is installed in a vehicle (and/or worn by operators), what kind of feedback it provides to drivers, evidence of validity (e.g., correlation with performance on vigilance or alertness-related tasks), operational reliability/durability, unobtrusiveness/acceptability, and affordability (or potential affordability following further development). Empirical data on device validity (i.e., evidence that it is accurately measuring alertness as measured by some independent criterion which is a known valid measure of alertness, such as the psychological vigilance test) is particularly important. The FHWA and NHTSA will select or invite presentations and demonstrations for the conference, based upon these criteria. Submitters are instructed not to submit any confidential or proprietary data on device design or performance.

The outcomes of this conference are expected to be (1) greater public awareness of recent FHWA/NHTSA findings with respect to the validity of eye-based measures of driver alertness and related technology developments in this area, (2) the identification of other research and technology studies relevant to in-vehicle alertness monitoring, (3) a review of the overall state-of-the-art of in-vehicle alertness monitoring, (4) a review of concepts for providing feedback of alertness information to drivers, as well as other proposed features of the driver-vehicle interface, and (5) a review of concepts for successful and user-acceptable introduction of in-vehicle alertness monitoring to commercial motor carrier fleets. The FHWA does not believe the outcomes of this conference will impact the agency's on-going rulemaking addressing its prescriptive hours-of-service rules.

Authority: 23 U.S.C. 315; 49 U.S.C. 31136; 49 U.S.C. 31502; 49 CFR 1.48 and 1.50.

Issued on: January 22, 1999.

George L. Reagle,

Associate Administrator for Motor Carriers Federal Highway Administration.

Raymond P. Owings,

Associate Administrator for Research and Development, National Highway Traffic Safety Administration.

[FR Doc. 99–2020 Filed 1–27–99; 8:45 am]

BILLING CODE 4910–22–P

DEPARTMENT OF TRANSPORTATION

Surface Transportation Board

[STB Finance Docket No. 33680]

Central New England Railroad, Inc.—Operation Exemption—Line Owned by State of Connecticut Department of Transportation

Central New England Railroad, Inc., an existing Class III carrier, has filed a verified notice of exemption under 49 CFR 1150.41 to operate approximately 8.7 miles of rail line owned by the State of Connecticut Department of Transportation from milepost 0.0, at Hartford, CT, to milepost 8.7, at Griffins, CT (known as the Griffins Industrial Track).[1]

The transaction is expected to be consummated on or after January 22, 1999.

If the notice contains false or misleading information, the exemption is void *ab initio*. Petitions to revoke the exemption under 49 U.S.C. 10502(d) may be filed at any time. The filing of a petition to revoke will not automatically stay the transaction.

An original and 10 copies of all pleadings, referring to STB Finance Docket No. 33680 must be filed with the Surface Transportation Board, Office of the Secretary, Case Control Unit, 1925 K Street, NW., Washington, D.C. 20423–0001. In addition, a copy of each pleading must be served upon Robert A. Wimbish, Esq., Rea, Cross & Auchincloss, 1707 L Street, NW., Suite 570, Washington, DC 20036.

Board decisions and notices are available on our website at ''WWW.STB.DOT.GOV.''

Decided: January 21, 1999.

[1] Applicant represents that the result of the proposed transaction will be the resumption of common carrier service on a state-owned line.

By the Board, David M. Konschnik, Director, Office of Proceedings.

Vernon A. Williams,

Secretary.

[FR Doc. 99–1887 Filed 1–27–99; 8:45 am]

BILLING CODE 4915–00–P

DEPARTMENT OF TRANSPORTATION

Surface Transportation Board

[STB Finance Docket No. 33704]

Pioneer Railcorp and Wabash & Western Railway Co.—Acquisition of Control Exemption—Michigan Southern Railroad Co., Inc.

Pioneer Railcorp (Pioneer), a noncarrier holding company, and Wabash & Western Railway Co. (WAB), a Class III rail carrier, have jointly filed a verified notice of exemption to acquire, through stock purchase, Michigan Southern Railroad Co., Inc., (MSR), a Class III rail carrier, operating in the States of Michigan and Indiana.[1]

The earliest the transaction could be consummated was January 6, 1999, the effective date of the exemption (7 days after the exemption was filed).

As indicated by Pioneer and WAB in their notice, pursuant to the original lease agreement between WAB, MSR, Gordon D. Morris, and Morris Leasing Co., Ltd. (MLSC), WAB has the option to purchase the outstanding stock of MSR, and the rail assets of MLSC would be transferred to MSR prior the closing of the stock purchase. WAB will continue to lease and operate the lines of MSR as well as operate under the name of Michigan Southern Railroad.[2]

WAB is a subsidiary of Pioneer Railcorp (Pioneer), which directly controls thirteeen existing shortline rail carriers.[3] Pioneer will indirectly control MSR upon completion of this transaction.

Pioneer and WAB state that: (i) The railroads do not connect with each other; (ii) the transaction is not part of a series of anticipated transactions that would connect the railroads with each other; and (iii) the transaction does not involve a Class I carrier. Therefore, the transaction is exempt from the prior approval requirements of 49 U.S.C. 11323. *See* 49 CFR 1180.2(d)(2).

Under 49 U.S.C. 10502(g), the Board may not use its exemption authority to relieve a rail carrier of its statutory obligation to protect the interests of its employees. Section 11326(c), however, does not provide for labor protection for transactions under sections 11324 and 11325 that involve only Class III rail carriers. Because this transaction involves Class III rail carriers only, the Board, under the statute, may not impose labor protective conditions for this transaction.

If the notice contains false or misleading information, the exemption is void ab initio. Petitions to revoke the exemption under 49 U.S.C. 10502(d) may be filed at any time. The filing of a petition to revoke will not automatically stay the transaction.

An original and 10 copies of all pleadings, referring to STB Finance Docket No. 33704, must be filed with the Surface Transportation Board, Office of the Secretary, Case Control Unit, 1925 K Street, NW, Washington, DC 20423–0001. In addition, a copy of all pleadings must be served on Daniel A. LaKemper, Esq., 1318 S. Johanson Road, Peoria, IL 61607.

Board decisions and notices are available on our website at ''WWW.STB.DOT.GOV.''

Decided: January 21, 1999.

By the Board, David M. Konschnik, Director, Office of Proceedings.

Vernon A. Williams,

Secretary.

[FR Doc. 99–1888 Filed 1–27–99; 8:45 am]

BILLING CODE 4915–00–P

[1] *See Morris Leasing Co., Ltd. and Michigan Southern Railroad, Inc.—Acquisition and Operation Exemption—Lines of Consolidated Rail Corporation,* STB Finance Docket No. 33265 (STB served Nov. 13, 1996).

[2] *See Wabash & Western Railway Co.—Lease and Operation Exemption—Morris Leasing Co., Ltd., and Michigan Southern Railroad, Inc.,* STB Finance Docket No. 33306 (STB served Dec. 24, 1996).

[3] See Pioneer Railcorp—Continuance in Control Exemption—Pioneer Industrial Railway Co., STB Finance Docket No. 33550 (STB served Feb. 20, 1998).

DEPARTMENT OF THE TREASURY

Submission for OMB Review; Comment Request

January 21, 1999.

The Department of Treasury has submitted the following public information collection requirement(s) to OMB for review and clearance under the Paperwork Reduction Act of 1995, Public Law 104–13. Copies of the submission(s) may be obtained by calling the Treasury Bureau Clearance Officer listed. Comments regarding this information collection should be addressed to the OMB reviewer listed and to the Treasury Department Clearance Officer, Department of the Treasury, Room 2110, 1425 New York Avenue, NW., Washington, DC 20220.

DATES: Written comments should be received on or before March 1, 1999 to be assured of consideration.

Bureau of Alcohol, Tobacco and Firearms (BATF)

OMB Number: 1512–0089.

Form Number: ATF F 5100.24.

Type of Review: Revision.

Title: Application for Basic Permit Under the Federal Alcohol Administration Act.

Description: ATF Form 5100.24 will be completed by persons intending to engage in a business involving beverage alcohol operations at distilled spirits plants, bonded wineries, or wholesaling/importing businesses. The information allows ATF to identify the applicant and the location of the business and to determine whether the applicant qualifies for a permit.

Respondents: Business or other for-profit.

Estimated Number of Respondents: 1,600.

Estimated Burden Hours Per Respondent: 1 hour, 45 minutes.

Frequency of Response: On occasion.

Estimated Total Reporting Burden: 2,800 hours.

OMB Number: 1512–0090.

Form Number: ATF F 5110.18 (1643).

Type of Review: Revision.

Title: Application for Amended Basic Permit Under the Federal Alcohol Administration Act.

Description: ATF F 5100.18 is completed by permittees who change their operations which require a new permit to be issued or a notice to be received by ATF. The information allows ATF to identify the permittee, the changes to the permit or business and to determine whether the applicant qualifies.

Respondent: Business or other for-profit.

Estimated Number of Respondents: 1,200.

Estimated Burden Hours Per Respondent: 30 minutes.

Frequency of Response: On occasion.

Estimated Total Reporting Burden: 600 hours.

Clearance Officer: Robert N. Hogarth (202) 927–8930, Bureau of Alcohol, Tobacco and Firearms, Room 3200, 650 Massachusetts Avenue, N.W.,Washington, DC 20226.

OMB Reviewer: Alexander T. Hunt (202) 395–7860, Office of Management and Budget, Room 10202, New Executive Office Building, Washington, DC 20503.

Lois K. Holland,

Departmental Reports Management Officer.

[FR Doc. 99–1942 Filed 1–27–99; 8:45 am]

BILLING CODE 4810–31–P

DEPARTMENT OF THE TREASURY

Submission for OMB Review; Comment Request

January 21, 1999.

The Department of Treasury has submitted the following public information collection requirement(s) to OMB for review and clearance under the Paperwork Reduction Act of 1995, Public Law 104–13. Copies of the submission(s) may be obtained by calling the Treasury Bureau Clearance Officer listed. Comments regarding this information collection should be addressed to the OMB reviewer listed and to the Treasury Department Clearance Officer, Department of the Treasury, Room 2110, 1425 New York Avenue, NW., Washington, DC 20220.

DATES: Written comments should be received on or before March 1, 1999 to be assured of consideration.

Internal Revenue Service (IRS)

OMB Number: 1545–1478.

Regulation Project Number: INTL–9–95 Final.

Type of Review: Extension.

Title: Certain Transfers of Domestic Stock or Securities by U.S. Persons to Foreign Corporation's.

Description: Transfers of stock or securities by U.S. persons in tax-free transactions are treated as taxable transactions when the acquirer is a foreign corporation, unless an exception applies (section 367(a)). Under the regulations, no U.S. person will qualify for an exception unless the U.S. target company complies with certain reporting requirements.

Respondents: Business and other for-profit.

Estimated Number of Respondents: 100.

Estimated Burden Hours Per Respondent: 10 hours.

Frequency of Response: Other (once).

Estimated Total Reporting Burden: 1,000 hours.

OMB Number: 1545–1479.

Regulation Project Number: IA–41–93 Final.

Type of Review: Extension.

Title: Automatic Extension of Time for Filing Individual Income Tax Returns; Automatic Extension of Time to File Partnership Return of Income, Trust Income Tax Return, and U.S. Real Estate Mortgage Investment Conduit Income Tax Return.

Description: Under section 1.6081–4, an individual required to file an income tax return is allowed an automatic 4-month extension of time to file if (a) an application is prepared on Form 4868, ''Application for Automatic Extension of Time to File U.S. Individual Income Tax Return,'' or in such other manner as may be prescribed by the Internal Revenue Service (IRS), (b) the application is filed on or before the date the return is due, and (c) the application shows the full amount properly estimated as tax.

Respondents: Individuals or households.

Estimated Number of Respondents: 1.

Estimated Burden Hours Per Respondent: 1 hour.

Frequency of Response: On occasion.

Estimated Total Reporting Burden: 1 hour.

Clearance Officer: Garrick Shear, Internal Revenue Service, Room 5571, 1111 Constitution Avenue, NW, Washington, DC 20224.

OMB Reviewer: Alexander T. Hunt (202) 395–7860, Office of Management and Budget, Room 10202, New Executive Office Building, Washington, DC 20503.

Lois K. Holland,

Departmental Reports Management Officer.

[FR Doc. 99–1943 Filed 1–27–99; 8:45 am]

BILLING CODE 4830–01–P

UNITED STATES INFORMATION AGENCY

Culturally Significant Objects Imported for Exhibition Determinations: ''Sigmar Polke: Works on Paper 1963–1974''

AGENCY: United States Information Agency.

ACTION: Notice.

SUMMARY: Notice is hereby given of the following determinations: Pursuant to the authority vested in me by the Act of October 19, 1965 (79 Stat. 985, 22 U.S.C. 2459), Executive Order 12047 of March 27, 1978 (43 FR 133359, March 29, 1978), and Delegation Order No. 85–5 of June 27, 1985 (50 FR 27393, July 2, 1985). I hereby determine that the objects to be included in the exhibit ''Sigmar Polke: Works on Paper 1963–1974,'' imported from abroad for the temporary exhibition without profit within the United States, are of cultural significance. These objects are imported pursuant to loan agreements with foreign lenders. I also determine that the exhibition or display of the exhibit objects at The Museum of Modern Art, New York, New York, from on or about April 1 through on or about June 16, 1999, is in the national interest. Public Notice of these determinations is ordered to be published in the **Federal Register**.

FOR FURTHER INFORMATION CONTACT: For a copy of the list of exhibit items, or for

other information, contact Lorie Nierenberg, Assistant General Counsel, Office of the General Counsel at 202/619–6084. The address is Room 700, U.S. Information Agency, 301 4th Street, NW., Washington, DC 20547–0001.

Dated: January 22, 1999.

Les Jin,

General Counsel.

[FR Doc. 99–2008 Filed 1–27–99; 8:45 am]

BILLING CODE 8230–01–M

Corrections

Federal Register

Vol. 64, No. 18

Thursday, January 28, 1999

This section of the FEDERAL REGISTER contains editorial corrections of previously published Presidential, Rule, Proposed Rule, and Notice documents. These corrections are prepared by the Office of the Federal Register. Agency prepared corrections are issued as signed documents and appear in the appropriate document categories elsewhere in the issue.

DEPARTMENT OF ENERGY

Federal Energy Regulatory Commission

Notice of Transfer of License

Correction

In notice document 99–1296, appearing on page 3296, in the issue of Thursday, January 21, 1999, make the following correction:

On page 3296, in the second column, in the seventh line, ''2966–099'' should read ''2966–009''.

[FR Doc. C9–1296 Filed 1–27–99; 8:45 am]

BILLING CODE 1505–01–D

POSTAL RATE COMMISSION

39 CFR Part 3001

[Docket Nos. RM99–1, Order No. 1225]

Amendments to Domestic Mail Classification Schedule

Correction

In rule document 99–326 beginning on page 1392 in the issue of Friday, January 8, 1999, make the following corrections:

Appendix A to Subpart C [Corrected]

1. On page 1395, in the first column, under paragraph 321.37, add the following paragraph:

* * * * *

321.45 Residual Shape Surcharge. Nonprofit subclass mail is subject to a surcharge if it is prepared as a parcel or if it is not letter or flat shaped.

* * * * *

2. On page 1404, Schedule 221 should read as set forth below:

FIRST-CLASS MAIL RATE SCHEDULE 221—LETTERS AND SEALED PARCELS

	Rate (cents)
Regular	
Single Piece: First Ounce	
Presort [1]	
Qualified Business Reply Mail	
Additional Ounce [2]	
Nonstandard Surcharge	
Single Piece	
Presort	
Automation—Presort [1]	
Letters [3]	
Basic Presort [4]	
3-Digit Presort [5]	
5-Digit Presort [6]	
Carrier Route Presort [7]	
Flats [8]	
Basic Presort [9]	
3/5-Digit Presort [10]	
Additional Ounce [2]	
Nonstandard Surcharge	

[1] A mailing fee of $_____ must be paid once each year at each office of mailing by any person who mails other than Single Piece First-Class Mail. Payment of the fee allows the mailer to mail at any First-Class rate. For presorted mailings weighing more than 2 ounces, subtract $_____ cents per piece.

[2] Rate applies through 13 ounces. Heavier pieces are subject to Priority Mail rates.

[3] Rates apply to bulk-entered mailings of at least 500 letter-size pieces, which must be delivery point barcoded and meet other preparation requirements specified by the Postal Service.

[4] Rate applies to letter-size Automation-Presort category mail not mailed at 3-Digit, 5-Digit, or Carrier Route rates.

[5] Rate applies to letter-size Automation-Presort category mail presorted to single or multiple three-digit ZIP Code destinations specified by Postal Service.

[6] Rate applies to letter-size Automation-Presort category mail presorted to single or multiple five-digit ZIP Code destinations specified by the Postal Service.

[7] Rate applies to letter-size Automation-Presort category mail presorted to carrier routes specified by the Postal Service.

[8] Rates apply to bulk-entered mailings of at least 500 flat-size pieces, each of which must be delivery-point barcoded or bear a ZIP+4 barcode, and must meet other preparation requirements specified by the Postal Service.

[9] Rate applies to flat-size Automation-Presort category mail not mailed at the 3/5-Digit rate.

[10] Rate applies to flat-size Automation-Presort category mail presorted to single or multiple three- and five-digit ZIP Code destinations as specified by the Postal Service.

3. On page 1407, Schedule 321.4B should read as set forth below:

STANDARD MAIL RATE SCHEDULE 321.4B—NONPROFIT SUBCLASS AUTOMATION CATEGORIES [1]

[Full rates]

	Rates (cents
Letter Size [2]	
Piece Rate	
Basic Letter [3]	
3-Digit Letter [4]	
5-Digit Letter [5]	
Destination Entry Discount per Piece	
BMC	
SCF	
Flat Size [6]	
Piece Rate	
Minimum per Piece [7]	
Basic Flat [8]	
3/5-Digit Flat [9]	
Destination Entry Discount per Piece	
BMC	
SCF	
Pound Rate [7]	
Plus per Piece Rate	
Basic Flat [8]	
3/5-Digit Flat [9]	
Destination Entry Discount per Pound	
BMC	
SCF	
DDU	

[1] A fee of $_____ must be paid once each 12-month period for each bulk mailing permit.

[2] For letter-size automation pieces meeting applicable Postal Service regulations.

[3] Rate applies to letter-size automation mail not mailed at 3-digit, 5-digit or carrier route rates.

[4] Rate applies to letter-size automation mail presorted to single or multiple three-digit ZIP Code destinations as specified by the Postal Service.

[5] Rate applies to letter-size automation mail presorted to single or multiple five-digit ZIP Code destinations as specified by the Postal Service.

[6] For flat-size automation mail meeting applicable Postal Service regulations.

[7] Mail pays either the minimum piece rate or the pound rate, whichever is higher.

[8] Rate applies to flat-size automation mail not mailed at 3/5-digit rate.

[9] Rate applies to flat-size automation mail presorted to single or multiple three- and five-digit ZIP Code destinations as specified by the Postal Service.

4. On page 1407, Schedule 321.5 should read as set forth below:

STANDARD MAIL RATE SCHEDULE 321.5—NONPROFIT ENHANCED CARRIER ROUTE SUBCLASS [1]

[Full rates]

	Rates (cents)
Letter Size	
Piece Rate	
Basic	
Basic Automated Letter [2]	
High Density	
Saturation	
Destination Entry Discount per Piece	
BMC	
SCF	
DDU	
Non-Letter Size [3]	
Piece Rate	
Minimum per Piece [4]	
Basic	
High Density	
Saturation	
Destination Entry Discount per Piece	
BMC	
SCF	
DDU	
Pound Rate [4]	
Plus per Piece Rate	
Basic	
High Density	
Saturation	
Destination Entry Discount per Pound	
BMC	
SCF	
DDU	

[1] A fee of $_____ must be paid once each 12-month period for each bulk mailing permit.

[2] Rate applies to letter-size automation mail presorted to routes specified by the Postal Service.

[3] Residual shape pieces are subject to a surcharge off $_____ per piece.

[4] Mailer pays either the minimum piece rate or the pound rate, whichever is higher.

5. On page 1413, Schedule 423.2 should read as set forth below:

PERIODICALS RATE SCHEDULE 423.2—WITHIN COUNTY

[Full rates]

	Rate (cents)
Per Pound	
General	
Delivery Office [1]	
Per Piece	
Required Presort	
Presorted to 3-digit	
Presorted to 5-digit	
Carrier Route Presort	
Per Piece Discount	
Delivery Office [2]	
High Density (formerly 125 piece) [3]	
Saturation	

PERIODICALS RATE SCHEDULE 423.2—WITHIN COUNTY—Continued

[Full rates]

	Rate (cents)
Automation Discounts for Automation Compatible Mail [4]	
From Required:	
Prebarcoded Letter size	
Prebarcoded Flat size	
From 3-digit:	
Prebarcoded Letter size	
Prebarcoded Flat size	
From 5-digit:	
Prebarcoded Letter size	
Prebarcoded Flat size	

[1] Applicable only to carrier route (including high density and saturation) presorted pieces to be delivered within the delivery area of the originating post office.

[2] Applicable only to carrier presorted pieces to be delivered within the delivery area of the originating post office.

[3] Applicable to high density mail, deducted from carrier route presort rate. Mailers also may qualify for this discount on an alternative basis as provided in DMCS section 423.83.

[4] For automation compatible pieces meeting applicable Postal Service regulations.

6. On page 1417, Schedule 943 should read as set forth below:

FEE SCHEDULE 943—INSURANCE

Coverage	Fee (in addition to postage)
Express Mail Insurance	
Document Reconstruction:	
$0.01 to $500	no charge
Mechandise:	
$0.01 to $500	no charge
500.01 to 5000	$_____ for each $100 (or fraction thereof) over $500 in value.
General Insurance [1]	
$0.01 to $50	
50.01 to 100	
100.01 to 5000	$_____ plus $_____ for each $100 (or fraction thereof) over $100 in coverage.

[1] For bulk insurance, deduct $_____ per piece.

[FR Doc. C9–326 Filed 1–27–99; 8:45 am]

BILLING CODE 1505–01–D

federal register

Thursday
January 28, 1999

Part II

Department of Housing and Urban Development

Funding Availability for the Welfare-to-Work Section 8 Tenant-Based Assistance Program for Fiscal Year 1999; Notice

DEPARTMENT OF HOUSING AND URBAN DEVELOPMENT

[Docket No. FR–4448–N–01]

Notice of Funding Availability for the Welfare-to-Work Section 8 Tenant-Based Assistance Program for Fiscal Year 1999

AGENCY: Office of Public and Indian Housing, HUD.

ACTION: Notice of Funding Availability (NOFA).

SUMMARY: *Purpose of Program:* The purpose of the Section 8 Welfare-to-Work Rental Voucher program is to provide tenant-based rental assistance that will help eligible families make the transition from welfare to work.

Available Funds: Approximately $248.2 million.

Eligible Applicants: Housing agencies (HAs), Indian tribes, and tribally designated housing entities (TDHEs). Two or more HAs or Indian tribes and TDHEs may apply jointly.

Application Deadline: The application deadline for Section 8 Welfare-to-Work Rental Vouchers under this NOFA is April 28, 1999, at the time described in section I. of this NOFA, below.

Match: None.

SUPPLEMENTARY INFORMATION:

If you are interested in applying for funding under this program, please review carefully the following information:

I. Application Due Date, Application Kits, and Technical Assistance

Application Due Date: April 28, 1999.

Address for Submitting Applications: The application and two copies must be submitted to the HA's local HUD Field Office HUB (Attention: HUB, Director of Public Housing) or local HUD Field Office Program Center (Attention: Program Center Coordinator) or for Indian tribes and their tribally designated housing entities, to the local Office of Native American Programs, (Attention: Administrator, Office of Native American Programs). Throughout this NOFA, the Field Office HUBs and Program Centers and the local Offices of Native American Programs will be referred to as the local HUD Field offices. Applicants should not submit any copies of their applications to HUD Headquarters.

(1) *Mailed Applications (Other than Overnight or Express Mail Delivery).* Your application will be considered timely filed if postmarked before midnight, local time, on the application due date and received by the appropriate local HUD Field Office on or within ten (10) days of the application due date.

(2) *Applications Sent by Overnight/Express Mail Delivery.* Applications sent by overnight delivery or express mail will be considered timely filed if received by the appropriate local HUD Field Office before or on the application due date, or upon submission of documentary evidence that they were placed in transit with the overnight delivery service by no later than the specified application due date.

(3) *Hand Carried Applications.* Applications must be delivered to the appropriate local HUD Field Office by 6:00 pm local time on the due date. Hand carried applications will be accepted during normal business hours before the application due date. On the application due date, business hours will be extended to 6:00 pm.

For Application Kits, Further Information and Technical Assistance

For an application kit and any supplemental information, please call the Public and Indian Housing Information and Resource Center at 1–800–955–2232. An application kit will also be available on the Internet through the HUD web site at http://www.hud.gov. When requesting an application kit, please refer to the Section 8 Welfare-to-Work Rental Voucher Program, and provide your name, address (including zip code) and telephone number (including area code).

For answers to your questions, you may also contact the Public and Indian Housing Information and Resource Center at 1–800–955–2232, or contact the Director of Public Housing, the Program Center Coordinator or the Office of Native American Program Administrator in your local HUD Office. Hearing-or speech-impaired individuals may call HUD's TTY number (202) 708–0770 or 1 800–877–8339 (the Federal Information Relay Service TTY). (Other than the ''800'' number, these numbers are not toll-free.) Information can also be accessed via the Internet through the HUD web site at http://www.hud.gov.

The HUD web site will also provide a text link to HUD's Welfare-to-Work home page, and the Welfare-to-Work related websites of the Departments of Health and Human Services, Labor, and Transportation, to assist you in coordinating your proposed program with the efforts sponsored by these Departments.

Prior to the application deadline, staff at the numbers given above will be available to provide general guidance, but not guidance in actually preparing the application. Following selection, but prior to award, HUD staff will be available to assist in clarifying or confirming information that is a prerequisite to the offer of an award by HUD.

II. Amount Allocated

Of the $283 million appropriated in Fiscal Year (FY) 1999 to fund Section 8 Welfare-to-Work Rental Vouchers, approximately $248.2 million is made available to housing agencies through the national competition under this NOFA.

Of the remainder, at least $4 million each shall be made available for local self-sufficiency/welfare-to-work initiatives in San Bernardino County California; Cleveland, Ohio; Kansas City, Missouri; Charlotte, North Carolina; Miami/Dade County, Florida; Prince Georges County Maryland; New York City, New York; and Anchorage, Alaska as provided by the VA/HUD and Independent Agencies Appropriations Act, 1999 (99 App. Act). HUD will contact these set-aside sites to advise them of specific application submission requirements and deadlines. Each HA for a set-aside site must submit to HUD any application materials requested by HUD. Funding will not be made available to a set-aside site until the site has submitted all HUD-required materials and obtained HUD approval of the submission.

In accordance with the 99 App. Act, $2.83 million of the $283 million available for Section 8 Welfare-to-Work Rental Vouchers may be used by HUD

to conduct a detailed evaluation of the effect of providing Section 8 Welfare-to-Work Rental Voucher assistance, rather than be awarded under this NOFA.

III. Program Description; Eligible Applicants; Eligible Activities

(A) Program Description

The Section 8 Welfare-to-Work Rental Voucher program provides tenant-based Section 8 rental assistance to help eligible families make the transition from welfare to work. Tenant-based Section 8 rental assistance is to be provided in connection with programs where the HA, tribe, or TDHE has demonstrated that tenant-based rental assistance is critical to the success of eligible families to obtain or retain employment. No additional funding is provided under this NOFA for welfare-to-work services for families. Funding is only for Section 8 Welfare-to-Work rental voucher housing assistance and regular Section 8 administrative fees for administration of such housing assistance. If appropriate, HAs may project base a portion of the funding following the applicable Section 8 Project-Based Certificate (PBC) program regulations (24 CFR part 983). The Section 8 Welfare-to-Work Rental Voucher program must take into account the particular circumstances of the local community. The rental assistance provided to families through the Section 8 Welfare-to-Work Rental Voucher program must be coordinated with other welfare reform and welfare-to-work initiatives.

The maximum number of Section 8 Welfare-to-Work Rental Vouchers that can be provided under this NOFA to an HA, tribe or TDHE is as follows: For an HA that is a State agency, (i.e., an agency with state-wide jurisdiction)—the lesser of 2,000 or one-half of the total budgeted Section 8 rental certificates and vouchers in the HA's Section 8 program for the HA's current Fiscal Year. If more than one HA applies as a State agency from the same State, only the highest-ranking one will be eligible for an award. For all other HAs, that are not set-aside sites identified in section II. of this NOFA, above—the lesser of 700 or one-half of the total budgeted Section 8 rental certificates and vouchers in the HA's Section 8 program for the HA's current Fiscal Year, or for tribes or TDHEs, the number of rental certificates and vouchers the entity was administering as of September 30, 1997. If you are a set-aside site that would receive fewer units than would be available to you under the above formula, and you wish to apply for the maximum number of units under the formula, you must apply under the national competition in this NOFA. The number of units available to you under the set-aside plus any units requested under this NOFA may not exceed the maximum that would be available to you under this NOFA.

An HA seeking welfare-to-work housing vouchers under this NOFA may use some of its current pool of other Section 8 voucher funding to augment the welfare-to-work vouchers in order to enlarge the pool of vouchers available to those families qualifying for its approved welfare-to-work program.

(B) Eligible Applicants

HAs, including Indian tribes and their tribally designated housing entities, may apply. All applicant HAs, tribes and TDHEs must develop a program in consultation with the State, local or Tribal entity administering the Temporary Assistance to Needy Families (TANF) program and the entity, if any, administering the Welfare-to-Work formula and/or competitive grants allocated by the United States Department of Labor.

(C) Eligible Activities

You may only use funds available under this NOFA for a Section 8 Welfare-to-Work rental voucher program. In the Section 8 Welfare-to-Work Rental Voucher Program, you will perform all normal rental voucher program activities, but you may only provide rental assistance to families that meet all normal Section 8 program requirements and also meet the specific requirements of the Welfare-to-Work Voucher Program. These specific requirements are stated in section IV.(A) of this NOFA.

IV. Program Requirements

(A) Eligibility of Families

(1) *Section 8 Welfare-to-Work Rental Voucher eligible families.* The term ''Section 8 Welfare-to-Work rental voucher program eligible family'' means a family that, in addition to meeting the eligibility requirements of the normal tenant-based Section 8 assistance program, also meets the following additional requirements:

(a) When initially selected for welfare-to-work rental voucher assistance, families must be eligible to receive, be currently receiving, or shall have received within the preceding two years, assistance or services funded under the TANF program;

(b) Tenant-based housing assistance must be determined to be critical to the family's ability to successfully obtain or retain employment; and

(c) The family shall not already be receiving tenant-based assistance under Section 8 of the United States Housing Act of 1937 (1937 Act—42 U.S.C. 1473f).

(2) To be eligible for selection for the Section 8 Welfare-to-Work Rental Voucher Program, families must be on the waiting list used by the HA for its tenant-based Section 8 program. For Indian tribes and TDHEs only, to be eligible for this program, families must be on either the rental or homeownership waiting list of that entity.

(B) HA Responsibilities

If your application is funded:

(1) You must modify your selection system to require the selection of Section 8 Welfare-to-Work Rental Voucher program eligible families for the program;

(2) Families on your Section 8 waiting list must be selected in accordance with the established selection policies in your HA's administrative plan;

(3) If you have a closed Section 8 waiting list and do not have a sufficient number of welfare-to-work eligible families on your waiting list, you must reopen the waiting list to accept an application from any Section 8 Welfare-to-Work eligible applicant family that is not currently on your waiting list for your tenant-based Section 8 program;

(4) You must administer the rental assistance in accordance with applicable voucher program regulations and requirements and your Section 8 administrative plan;

(5) During the term of this welfare-to-work funding, if Section 8 rental assistance for a family under this program is terminated, available welfare-to-work rental assistance must be provided to another Section 8 Welfare-to-Work eligible family selected from your tenant-based Section 8 program waiting list. The term of welfare-to-work funding is the term of the welfare-to-work ACC funding increment.

(6) *Welfare-to-Work Evaluation Participation.* HUD is seeking 5 to 9 HAs to participate, on a voluntary basis, in the evaluation that HUD intends to conduct on the Section 8 Welfare-to-Work Rental Voucher Program. HAs who volunteer to participate as a special evaluation site for purposes of this evaluation, if they are selected for an award under this NOFA, will be compensated for any additional administrative burden from the $2.83 million evaluation setaside in the 99 App. Act. In order to participate as a special evaluation site, you and your partners must:

(a) Be awarded at least 450 units under this NOFA.

(b) Fully cooperate with random assignment of your welfare-to-work applicants to treatment and control groups. You will be required to follow an established protocol for determining that some eligible families receive and some eligible families do not receive welfare-to-work vouchers on a random basis.

(c) Assist in data collection and retrieval for the evaluation through administration of special forms and extraction of data from management systems.

(d) Submit a budget with reasonable and necessary costs once HUD specifies the required activities for the evaluation.

If HUD does not receive sufficient voluntary applications to participate as evaluation sites for this Congressionally mandated study, HUD may require one or more sites receiving at least 450 units to cooperate with an evaluation based on random assignment as a condition of funding. If you submit an application for 450 or more units, your consent to cooperate with a random-assignment evaluation may be assumed by HUD, even if you do not explicitly volunteer.

(C) TANF and Welfare-to-Work Support

Your application must include certifications from the State, local or Tribal entity administering assistance under the TANF program and from the entity, if any, administering the Welfare-to-Work formula and/or competitive grants allocated by the United States Department of Labor that these entities support your proposed Section 8 Welfare-to-Work program and will cooperate with you, as the administrator of the housing assistance, to assure that the rental assistance is coordinated with other welfare reform and welfare-to-work initiatives. If any of these entities does not respond to your request for this certification within a reasonable time period, its concurrence shall be assumed but you will be required to submit a copy of your request for this certification with your application. If any of these entities objects to the application, their concerns must accompany the application when it is submitted to HUD so that HUD can take the concerns into account in its funding decision.

(D) Waiver Requests

Your proposed Section 8 Welfare-to-Work program must be workable without any waivers, and will be rated and ranked without the waiver of any requirements. Statutory waivers will not be granted. However, your application may include requests for waivers of any regulatory, handbook or directive requirements along with an explanation of how the waivers would improve your program. If you are selected for an award, HUD will consider whether or not to grant your waiver request. Among other considerations, waivers will not be granted if they have an adverse impact on fair housing and civil rights.

(E) Program Compliance and Designation of Subcontractor

Immediately after the publication of this NOFA, the local HUD field office will notify, in writing, those HAs that are not eligible to apply without a subcontractor acceptable to HUD or a proposal for management improvements acceptable to HUD, as explained in this section.

(1) *Program compliance.* Your application must designate a subcontractor acceptable to HUD to administer the new funding increment on your behalf, in accordance with paragraph (2) of this section, if you have:

(a) Material weaknesses or reportable conditions outstanding from Inspector General audit findings, or HUD management review findings for one or more of your Section 8 rental voucher, rental certificate or moderate rehabilitation programs;

(b) Serious underutilization evidenced by fewer than 85 percent of budgeted rental certificates or vouchers under lease; or

(c) Significant findings in program compliance reviews.

(2) *Designation of Subcontractor.* If you have any of the compliance problems listed in paragraph (1) of this section, you must designate a subcontractor acceptable to HUD to administer the new funding increment under this NOFA on your behalf. In such instances, your application must include:

(a) An agreement by the subcontractor to administer the new funding increment; and

(b) A statement that outlines the steps you are taking to resolve the compliance problems, which may be a proposal for management improvements that you will implement to remedy the problems.

(F) Statutory Requirements

To be eligible for funding under this NOFA, you, the applicant, must meet all applicable statutory and regulatory requirements. If you need copies of regulations, they are available at the HUD web site located at http://www.HUD.gov. HUD may reject an application from further funding consideration if the activities or projects proposed in the application are not eligible activities and projects, or HUD may eliminate the ineligible activities from funding consideration and reduce the grant amount accordingly.

(G) Threshold Requirements—Compliance with Fair Housing and Civil Rights Laws

With the exception of Federally recognized Indian tribes, all applicants must comply with all Fair Housing and civil rights laws, statutes, regulations and executive orders as enumerated in 24 CFR 5.105(a). If you are a Federally recognized Indian tribe, you must comply with the Age Discrimination Act of 1975, section 504 of the Rehabilitation Act of 1973, and the Indian Civil Rights Act. If you, the applicant,—

(1) Have been charged with a violation of the Fair Housing Act by the Secretary;

(2) Are a defendant in a Fair Housing Act lawsuit filed by the Department of Justice; or

(3) Have received a letter of noncompliance findings under Title VI of the Civil Rights Act, section 504 of the Rehabilitation Act, or section 109 of the Housing and Community Development Act—

You are not eligible to apply for funding under this NOFA until you have resolved the charge, lawsuit, or letter of findings to the satisfaction of the Department.

(H) Additional Nondiscrimination Requirements

You, the applicant, must comply with the Americans with Disabilities Act, and Title IX of the Education Amendments Act of 1972.

(I) Affirmatively Furthering Fair Housing

If you are a successful applicant, you will have a duty to affirmatively further fair housing. You, the applicant, should include in your application or work plan the specific steps that you will take to:

(1) Address the elimination of impediments to fair housing that were identified in the jurisdiction's Analysis of Impediments (AI) to Fair Housing Choice;

(2) Remedy discrimination in housing; or

(3) Promote fair housing rights and fair housing choice.

Further, you, the applicant, have a duty to carry out the specific activities provided in your responses to the NOFA rating factors that address affirmatively furthering fair housing.

(J) Forms, Certifications and Assurances

You, the applicant, are required to submit signed copies of the standard forms, certifications, and assurances, included in the HUD Section 8 application, form HUD–52515 (see section VI.(A), below, of this NOFA) and the certification required by 24 CFR 24.510. (The provisions of 24 CFR part 24 apply to the employment, engagement of services, awarding of contracts, subgrants, or funding of any recipients, or contractors or subcontractors, during any period of debarment, suspension, or placement in ineligibility status, and a certification is required.)

(K) Conflicts of Interest

If you are a consultant or expert who is assisting HUD in rating and ranking applicants for funding under this NOFA, you are subject to 18 U.S.C. 208, the Federal criminal conflict of interest statute, and the Standards of Ethical Conduct for Employees of the Executive Branch regulation published at 5 CFR part 2635. As a result, if you have assisted or plan to assist applicants with preparing applications for this NOFA, you may not serve on a selection panel and you may not serve as a technical advisor to HUD for this NOFA. All individuals involved in rating and ranking this NOFA, including experts and consultants, must avoid conflicts of interest or the appearance of conflicts. Individuals involved in the rating and ranking of applications must disclose to HUD's General Counsel or HUD's Ethic Law Division the following information if applicable: the selection or non-selection of any applicant under this NOFA will affect the individual's financial interests, as provided in 18 U.S.C. 208; or the application process involves a party with whom the individual has a covered relationship under 5 CFR 2635.502. The individual must disclose this information prior to participating in any matter regarding this NOFA. If you have questions regarding these provisions or if you have questions concerning a conflict of interest, you may call the Office of General Counsel, Ethics Law Division, at 202–708–3815 and ask to speak to one of HUD's attorneys in this division.

(L) Environmental Requirements

In accordance with 24 CFR 50.19(b)(11) of the HUD regulations, tenant-based activities assisted under this program are categorically excluded from the requirements of the National Environmental Policy Act and are not subject to environmental review under the related laws and authorities. In accordance with 24 CFR 983.11(b), you must have a responsible entity complete an environmental review and obtain a HUD release of funds before entering into any agreement to provide project-based assistance.

(M) Notice of Repeal of Local Government Comment Requirements

Local government comments that HUD was previously required to obtain from the unit of general local government on HA applications for Section 8 rental assistance under Section 213(c) of the Housing and Community Development Act of 1974 are no longer required. Section 551 of the Quality Housing and Work Responsibility Act of 1998 (Pub.L. 105–276, 112 Stat. 2461, approved October 21, 1998) (QHWRA) repealed the provisions of Section 213(c) of the Housing and Community Development Act of 1974. Although section 503 of QHWRA establishes an effective date of October 1, 1999, for its provisions unless otherwise specifically provided, section 503 also permits any QHWRA provision or amendment to be implemented by notice, unless otherwise specifically provided. Accordingly, this section of the NOFA provides the notice of implementation of section 551 of QHWRA as permitted by section 503 of QHWRA.

V. Application Selection Process

(A) Overview of Process

Selections of applicants will be made on the basis of a national competition according to the criteria described in section V.(C), below, of this NOFA. Local HUD field offices will initially review applications to ensure that your applications are complete and on time and that you meet the threshold requirements found in section V.(B), below, of this NOFA. Based on your past experience and field office knowledge of your capacity to perform, the field office must also determine if the number of units you request can reasonably be placed under lease within 12 months. If the field office determines that you cannot enroll the number of Section 8 Welfare-to-Work families projected and place under lease the number of units requested, the field office will determine the number of units that can be expected to be placed under lease within 12 months.

All eligible applications will then be forwarded to the Grants Management Center with the field office recommendation of the maximum number of units that should be considered for approval for each application based on its analysis of capacity. Applications will be rated and ranked by the Grants Management Center based on the criteria listed below in section V.(C). An application must meet all of the threshold requirements of this NOFA and receive a score of at least 55 points to qualify for funding. In this national competition, HUD will fund applications from at least the two highest rated and ranked Indian tribes or their tribally designated housing entities that qualify for funding. All other awards will be made in rank order to qualifying applications.

(B) Threshold Requirements

(1) The application is received on time.

(2) The application is complete and all required certifications, including those described in section IV.(K), above, of this NOFA.

(3) Any technical deficiencies have been corrected by the end of the 14-day correction period.

(4) You meet the requirements of section IV.(G) of this NOFA, Compliance With Fair Housing and Civil Rights Laws.

(5) The application designates a subcontractor in accordance with section IV.(E), above, of this NOFA, if necessary under that section.

(6) Your leasing rate for your Section 8 rental certificate and rental voucher programs is at least 90 percent of the units in your HUD-approved budget for the last completed HA fiscal year prior to this application funding.

(C) Rating Factors

(1) *Factor 1:* Need for Welfare-to-Work Voucher Program (20 points)

(a) *Description:* This factor examines the extent to which you identify the community need that your proposed activities will target and the urgency of meeting this need. You must provide evidence of the housing need of the eligible population that will be served by this program and demonstrate that tenant-based assistance is essential to assist these families obtain/retain employment. If the HA plans to project-base any of the Welfare-to-Work rental voucher funding, the HA must explain how this would benefit the HA's Welfare-to-Work rental voucher program. Applicants with jurisdiction outside of metropolitan areas must address the needs of rural areas.

(b) *Submission Requirements for Factor 1:* You must submit a narrative that documents that tenant-based rental assistance for which you are applying is necessary to assist Welfare-to-Work eligible families to obtain/retain employment. If you plan to project-base a portion of the Welfare-to-Work rental

voucher funding, the need to develop project-based units must be explained and how this would best meet the needs of welfare-to-work eligible families, and you must provide an estimate of the time to occupancy.

(2) *Factor 2:* Soundness of Approach (20 Points).

(a) *Description:* This factor examines the quality of your Welfare-to-Work voucher program. You must describe in narrative form the proposed program developed in coordination with the TANF program and other welfare-to-work programs. And how the proposed program design encourages and aids Welfare-to-Work eligible families to move from welfare to work. In evaluating this factor, HUD will consider the extent to which your application demonstrates that tenant-based assistance is critical to the success of assisting eligible families to obtain or retain employment. HUD will also consider the extent to which your application lays out an effective plan, with a fully developed strategy of outreach to eligible families to ensure that all Welfare-to-Work vouchers are under lease within a year of award, including how your analysis of need in Factor 1 affects your outreach to families and targeting of assistance. You should describe any innovative approaches that will be included in your proposed program. You must address your strategy for tenant counseling, housing search, and landlord outreach, and specify the criteria for selecting among eligible families.

HUD will also consider the extent to which, and how well, your plan of proposed activities is described in detail in your application; addresses the goals and purposes of the Welfare-to-Work voucher program; addresses the need for a Welfare-to-Work program that was identified under Factor 1, above; will be carried out in a timely manner, conducted in a manner that will reach and benefit members of the target group, and will make use of services and materials that are accessible to all persons, including persons with disabilities; and will yield long-term results and innovative strategies or ''best practices'' that can be readily disseminated to other organizations and State, tribal and local governments.

(b) *Submission Requirements for Factor 2:*

(i) A detailed narrative describing your proposed Welfare-to-Work voucher program developed in coordination with the TANF program and other welfare-to-work programs; the specific tasks and subtasks to be performed, including innovative approaches and plans for tenant counseling, housing search and landlord outreach.

(ii) A discussion of how your application demonstrates that tenant-based assistance is critical to the success of assisting eligible families to obtain or retain employment.

(iii) A discussion of how your proposed activities address the goals and purposes of the Welfare-to-Work voucher program including how the program design encourages and aids the move to self-sufficiency, and the criteria for selecting among eligible families.

(iv) A discussion of how your application lays out a fully developed and effective plan with outreach to eligible families to ensure that all Welfare-to-Work vouchers are under lease within a year of award. Your discussion must specify how your analysis of need in Factor 1 affects your outreach to families and targeting of assistance, including families in rural areas if your jurisdiction includes rural areas, unless you provide justification for not addressing rural areas.

(v) A description of the immediate benefits of your proposed activities and how the benefits will be measured. You must describe the methods you will use to determine the effectiveness of Welfare-to-Work program activities.

(vi) A Section 8 Leasing Schedule.

(vii) A discussion of how the activities will reach and benefit members of the target group and will make use of services and materials that are accessible to all persons, including persons with disabilities;

(viii) A description of how the proposed activities will yield long-term results and innovative strategies or ''best practices'' that can be readily disseminated to other organizations, communities, and State, tribal and local governments.

(3) *Factor 3:* Capacity of Applicant and Relevant Organizational Experience (20 Points)

(a) *Description:* This factor examines the extent to which your organization (including individuals or organizations, such as subcontractors or consultants, if any, that will be your partners in carrying out the proposed activities) have the organizational resources necessary to carry out your proposed activities in a timely manner. In evaluating this factor, HUD will consider the extent to which you demonstrate recent and relevant experience in, and knowledge about, carrying out the same or similar activities as those proposed. The overall quality of your staff, administrative ability, and fiscal management ability will be evaluated by HUD. HUD may also rely on information from performance reports, financial status information, monitoring reports, audit reports and other information available to HUD in making its determination under this factor.

Your overall administrative ability is evidenced by factors such as leasing rates, MTCS reporting, correct administration of housing quality standards, compliance with fair housing and equal opportunity program requirements, assistance computation and rent reasonableness and, if you have a mandatory Family Self-Sufficiency Program, implementation of an FSS program of at least the minimum program size or a smaller program size approved by HUD. Your relevant organization experience would be evidence of a successful implementation of an FSS program, Family Unification program, or other program that involved coordination with other agencies and/or coordination of services for families.

(b) *Submission Requirements for Factor 3:*

(i) Narrative description of past performance in carrying out activities that are the same as, or similar to, the activities proposed for funding, and demonstrate reasonable success in carrying out those activities. You may demonstrate such reasonable success by showing that your previous activities have been carried out as proposed and in a timely manner. You must show that benchmarks in operation were met and performance reports were prepared as required. You must also describe any delays that were encountered, and the actions you took to overcome such delays.

(ii) You must submit the proposed number of staff years necessary to carry out the proposed activities, identifying the employees and partners, such as co-applicants, subgrantees, contractors, consultants, and volunteers, to be allocated to the project; the titles and relevant professional background and experience of each employee and partner proposed to be assigned to the project; and the roles to be performed by each identified employee and partner. If you do not presently have the employees and partners necessary to carry out all of the proposed activities, you must identify the gaps in your current staffing and describe in detail your proposed method for securing the necessary employees and partners to carry out the project in a timely manner.

(iii) You must provide a comprehensive description of the project's management structure. You must also describe how staff and partners relate to the project's administrator or manager, including the

lines of authority and accountability for all the proposed activities.

(iv) You must demonstrate ability in handling financial resources with adequate financial control procedures and accounting procedures by providing a comprehensive description of the fiscal management structure for the proposed project, including budgeting, fiscal controls and accounting. HUD will also consider findings identified in your most recent audits; internal consistency in the application of numeric quantities; accuracy of mathematical calculations; and other available information on financial management ability.

(4) *Factor 4:* Leveraging Resources. (20 Points)

(a) *Description:* This factor addresses the commitment of public and private resources that will support your Welfare-to-Work voucher program. HUD will consider the extent to which you can document firm, written commitments of resources from the local TANF agency, and, if applicable, from the entity administering the Department of Labor Welfare-to-Work formula and/or competitive grant; other Federal, State, tribal, and local sources; and from other entities, such as private industry, and for-profit and not-for-profit organizations to provide services and assistance in the form of cash funding, in-kind contributions, services or personnel. Such commitments may include, but are not limited to: child care, transportation necessary to receive services or maintain employment, remedial education, education for completion of secondary or post-secondary schooling, job training, preparation and counseling; substance abuse treatment and counseling; training in homemaking and parenting skills; training in money management; counseling in homeownership responsibilities and opportunities available for rental and homeownership in the private housing market; and job development and placement.

(b) *Submission Requirements for Factor 4:*

(i) Describe all firm commitments to the Welfare-to-Work voucher program including cash funding, in-kind contributions, services or personnel from other Federal, State, tribal, local and private sources.

(ii) Provide evidence of leveraging/partnerships by including in the application, letters of firm commitments, memoranda of understanding, or agreements to participate from those entities identified as partners. To be firmly committed, there must be a written agreement to provide the resources. The written agreement may be contingent upon an application receiving funding under this NOFA. Each letter of commitment, memorandum of understanding, or agreement to participate should include the partner organization's or individual's name, proposed level of commitment and responsibilities as they relate to the proposed activities. The commitment must also be signed by an official legally able to make commitments on behalf of the organization.

(5) *Factor 5:* Comprehensiveness and Coordination (20 Points)

(a) *Description:* This factor addresses the extent to which your proposal reflects a coordinated, comprehensive process of identifying needs and building a system to address needs on an ongoing basis by using available HUD funding and other resources. You must describe the extent to which assistance under your proposed Welfare-to-Work program will be coordinated with welfare reform and with other welfare-to-work initiatives, including the U.S. Department of Transportation's Job Access program. The application must include certifications from the TANF agency and the entity, if any, administering the Welfare-to-Work formula and/or competitive grants of the Department of Labor agency of their cooperation and support of the proposed program or evidence of your request for the certification of those agencies and of their failure to respond within a reasonable time, or, if either agency objects to your proposed Welfare-to-Work program, the objections must be included in your application.

In evaluating this factor, HUD will consider:

(i) The extent to which you demonstrate the support and participation of the TANF agency and the entity, if any, administering the Department of Labor Welfare-to-Work formula and/or competitive grant and the commitment of other public and private organizations in the community.

(ii) The specific steps you will take to share with others information on solutions and outcomes resulting from the Welfare-to-Work voucher program, if funded.

(iii) The specific steps you have taken or will take to become active in the community's Consolidated Plan process; Analysis of Impediments to Fair Housing Choice process; Continuum of Care Homeless Assistance planning process, if homeless persons are to be served by the proposed activities; or the community's Indian Housing Plan process; and to address, through these processes, the needs that are the focus of the Welfare-to-Work voucher program.

(iv) The specific steps you have taken or will take to coordinate, through meetings, information networks, planning processes, or other mechanisms, your activities with other welfare-to-work activities in the community, including the appropriate local transportation entity (i.e., transit properties, metropolitan planning organizations, State and/or Indian tribe departments of transportation).

(b) *Submission Requirements for Factor 5:*

(i) Describe what role families, community leaders and organizations and government and private entities in communities you serve have had in planning the activities described in your application and what role they will have in carrying out such activities.

(ii) Describe how you will share with others information on solutions and outcomes resulting from the Section 8 Welfare-to-Work voucher program, if funded.

(iii) Describe specific steps you have taken or will take to become active in the community's Consolidated Plan process; or the process for the Analysis of Impediments to Fair Housing Choice; or the community's Continuum of Care Homeless Assistance planning process, if homeless persons are to be served by the proposed welfare-to-work activities; or the community's Indian Housing Plan process; and to address, through these processes, the needs that are the focus of your proposed activities.

(iv) Describe the specific steps you have taken or will take to coordinate, through meetings, information networks, planning processes, or other mechanisms, your activities with other proposed or on-going activities in the community funded by HUD or other Federal, State, tribal, local or private sources, including the appropriate local transportation entity (i.e., transit properties, metropolitan planning organizations, State and/or Indian tribe departments of transportation.

VI. Application Submission Requirements

(A) Form HUD–52515

Funding Application, form HUD–52515, must be completed and submitted for the Section 8 Welfare-to-Work voucher program. This form includes all the necessary certifications for Fair Housing, Drug-Free Workplace and Lobbying Activities. An application must include the information in Section C, Average Monthly Adjusted Income of form HUD–52515 in order for HUD to calculate the amount of Section 8

budget authority necessary to fund the requested number of voucher units. You may obtain a copy of form HUD–52515 from the local HUD Field Office or may download it from the HUD Home page on the internet's world wide web (http://www.HUD.gov).

(B) Response to Threshold Requirements

Your application must respond to the threshold requirements that apply to you in paragraphs V.(B)(2) through (5), above, in this NOFA.

(C) Narrative response to Factors for Award

Your application package must include the narrative description and any letters, certifications or other materials required for each of the ranking and rating factors from Section V.(C) of this NOFA.

(D) Waiver Requests

Your application may include requests for waivers of any administrative requirements in HUD regulations or directives (handbooks and notices). Statutory waivers will not be granted. Waiver requests must include an explanation of how the waivers would improve your program. Your proposed program must be workable without any waivers, and waiver requests will not be considered in rating and ranking your application. Your waiver requests will only be considered if you receive an award under this NOFA.

(E) Program Evaluation Participation

If you would like to participate in HUD's Welfare-to-Work program evaluation, your application should also include a statement that you are willing to participate as a special evaluation site in accordance with the conditions described in section IV.(B)(6) of this NOFA, above.

VII. Corrections to Deficient Applications

After the application due date, HUD may not, consistent with its regulations in 24 CFR part 4, subpart B, consider any unsolicited information you, the applicant, may want to provide. HUD may contact you, however, to clarify an item in your application or to correct technical deficiencies. You should note, however, that HUD may not seek clarification of items or responses that improve the substantive quality of your response to any eligibility or selection factors. *Examples* of curable (correctable) technical deficiencies include your failure to submit the proper certifications or your failure to submit an application that contains an original signature by an authorized official. In each case, HUD will notify you in writing by describing the clarification or technical deficiency. HUD will notify applicants by facsimile or by return receipt requested. Applicants must submit clarifications or corrections of technical deficiencies in accordance with the information provided by HUD within 14 calendar days of the date of receipt of the HUD notification. If your deficiency is not corrected within this time period, HUD will reject your application as incomplete, and it will not be considered for funding.

VIII. Findings and Certifications

(A) Paperwork Reduction Act Statement

The information collection requirements related to this program have been approved by the Office of Management and Budget (OMB) in accordance with the Paperwork Reduction Act of 1995 (44 U.S.C. 3501–3520), and have been assigned OMB approval number 2577–0169. *An agency may not conduct or sponsor, and a person is not required to respond to, a collection of information unless the collection displays a valid control number.*

(B) Environmental Impact

Except to the extent that recipients may project base assistance provided under this NOFA, this NOFA does not direct, provide for assistance or loan and mortgage insurance for, or otherwise govern or regulate, real property acquisition, disposition, leasing (other than tenant-based rental assistance), rehabilitation, alteration, demolition, or new construction, or establish, revise or provide for standards for construction or construction materials, manufactured housing, or occupancy. To the extent that recipients project base assistance provided under this NOFA, that assistance is subject to 24 CFR part 983, including the environmental review provisions set out at 24 CFR 983.11. Accordingly, under 24 CFR 50.19(c) (1) and (5), this NOFA is categorically excluded from environmental review under the National Environmental Policy Act (42 U.S.C. 4321).

(C) Federalism, Executive Order 12612

The General Counsel, as the Designated Official under section 6(a) of Executive Order 12612, *Federalism,* has determined that the policies contained in this NOFA will not have substantial direct effects on States or their political subdivisions, or on the relationship between the Federal Government and the States, or on the distribution of power and responsibilities among the various levels of government. Specifically, the NOFA solicits applicants to help eligible families make the transition from welfare to work, and does not impinge upon the relationships between the Federal government and State and local governments. As a result, the NOFA is not subject to review under the Order.

(D) Prohibition Against Lobbying Activities

You, the applicant, are subject to the provisions of section 319 of the Department of Interior and Related Agencies Appropriation Act for Fiscal Year 1991, 31 U.S.C. 1352 (the Byrd Amendment), which prohibits recipients of Federal contracts, grants, or loans from using appropriated funds for lobbying the executive or legislative branches of the Federal Government in connection with a specific contract, grant, or loan. You are required to certify, using the certification found at Appendix A to 24 CFR part 87, that they will not, and have not, used appropriated funds for any prohibited lobbying activities. In addition, you must disclose, using Standard Form LLL, ''Disclosure of Lobbying Activities,'' any funds, other than Federally appropriated funds, that will be or have been used to influence Federal employees, members of Congress, and congressional staff regarding specific grants or contracts. Tribes and tribally designated housing entities (THDEs) established by an Indian tribe as a result of the exercise of the tribe's sovereign power are excluded from coverage of the Byrd Amendment, but tribes and TDHEs established under State law are not excluded from the statute's coverage.

(E) Section 102 of the HUD Reform Act; Documentation and Public Access Requirements

Section 102 of the Department of Housing and Urban Development Reform Act of 1989 (42 U.S.C. 3545) (HUD Reform Act) and the regulations codified in 24 CFR part 4, subpart A, contain a number of provisions that are designed to ensure greater accountability and integrity in the provision of certain types of assistance administered by HUD. On January 14, 1992 (57 FR 1942), HUD published a notice that also provides information on the implementation of section 102. The documentation, public access, and disclosure requirements of section 102 apply to assistance awarded under this NOFA as follows:

(1) *Documentation and public access requirements.* HUD will ensure that documentation and other information regarding each application submitted pursuant to this NOFA are sufficient to indicate the basis upon which assistance was provided or denied. This material, including any letters of support, will be made available for public inspection for a 5-year period beginning not less than 30 days after the award of the assistance. Material will be made available in accordance with the Freedom of Information Act (5 U.S.C. 552) and HUD's implementing regulations in 24 CFR part 15.

(2) *Disclosures.* HUD will make available to the public for 5 years all applicant disclosure reports (HUD Form 2880) submitted in connection with this NOFA. Update reports (also Form 2880) will be made available along with the applicant disclosure reports, but in no case for a period less than 3 years. All reports—both applicant disclosures and updates—will be made available in accordance with the Freedom of Information Act (5 U.S.C. 552) and HUD's implementing regulations at 24 CFR part 5.

(3) *Publication of Recipients of HUD Funding.* HUD's regulations at 24 CFR 4.7 provide that HUD will publish a notice in the **Federal Register** on at least a quarterly basis to notify the public of all decisions made by the Department to provide:

(i) Assistance subject to section 102(a) of the HUD Reform Act; or

(ii) Assistance that is provided through grants or cooperative agreements on a discretionary (non-formula, non-demand) basis, but that is not provided on the basis of a competition.

(F) Section 103 HUD Reform Act

HUD's regulations implementing section 103 of the Department of Housing and Urban Development Reform Act of 1989 (42 U.S.C. 3537a), codified in 24 CFR part 4, apply to this funding competition. The regulations continue to apply until the announcement of the selection of successful applicants. HUD employees involved in the review of applications and in the making of funding decisions are limited by the regulations from providing advance information to any person (other than an authorized employee of HUD) concerning funding decisions, or from otherwise giving any applicant an unfair competitive advantage. Persons who apply for assistance in this competition should confine their inquiries to the subject areas permitted under 24 CFR part 4.

Applicants or employees who have ethics related questions should contact the HUD Ethics Law Division at (202) 708–3815. (This is not a toll-free number.) For HUD employees who have specific program questions, the employee should contact the appropriate field office counsel, or Headquarters counsel for the program to which the question pertains.

(G) Catalog of Federal Domestic Assistance Numbers

The Federal Domestic Assistance numbers for this program are 14.855 and 14.857.

IX. Authority

The VA/HUD and Independent Agencies Appropriations Act, 1999 appropriated $283 million for the Welfare-to-Work Tenant-Based Assistance Program.

Dated: January 25, 1999.

Harold Lucas,

Assistant, Secretary for Public and Indian Housing.

[FR Doc. 99–1985 Filed 1–25–99; 2:46 pm]

BILLING CODE 4210–33–P

federal register

Thursday
January 28, 1999

Part III

Department of Labor

Pension and Welfare Benefits Administration

29 CFR Part 2520

Use of Electronic Communication and Recordkeeping Technologies By Employee Pension and Welfare Benefit Plans; Proposed Rule

DEPARTMENT OF LABOR

Pension and Welfare Benefits Administration

29 CFR Part 2520

RIN 1210–AA71

Use of Electronic Communication and Recordkeeping Technologies by Employee Pension and Welfare Benefit Plans

AGENCY: Pension and Welfare Benefits Administration, Labor.

ACTION: Notice of proposed rulemaking and Request for information.

SUMMARY: This document contains proposed rules under Title I of the Employee Retirement Income Security Act of 1974, as amended (ERISA), concerning the disclosure of certain employee benefit plan information through electronic media and standards for the maintenance and retention of employee benefit plan records in electronic form. The proposal would establish a safe harbor pursuant to which all pension and welfare benefit plans covered by Title I of ERISA may satisfy their obligations to furnish summary plan descriptions, summaries of material modifications, updated summary plan descriptions, and summary annual reports using electronic media. With respect to recordkeeping, the proposal would provide standards concerning the use of electronic media, including electronic storage and automatic data processing systems, for the maintenance and retention of records required by sections 107 and 209 of ERISA. This document also sets forth the Department's view that, in the absence of final regulations or other guidance, good faith compliance with the standards set forth in these proposed regulations will, with respect to the disclosure and recordkeeping requirements specifically addressed in the proposed regulations, constitute compliance with a reasonable interpretation of 29 CFR 2520.104b–1 and ERISA sections 107 and 209. In addition, the Department is inviting public comments on a number of issues relating to the use of new technologies in the administration of employee benefit plans that are not specifically addressed by the proposed rules. The proposed rules, if adopted, would affect employee pension and welfare benefit plans, including group health plans, plan sponsors, administrators and fiduciaries, and plan participants and beneficiaries.

DATES: Written comments on these proposed rules must be received by the Department of Labor on or before March 29, 1999.

ADDRESSES: Interested persons are invited to submit written comments (preferably three copies) concerning the proposed rules and request for information to: Office of Regulations and Interpretations, Pension and Welfare Benefits Administration, U.S. Department of Labor, 200 Constitution Avenue, NW, Room N–5669, Washington, DC 20210. Attention: Proposed New Technology Rules. Written comments may also be sent by Internet to the following address: ''etechreg@pwba.dol.gov'' (without the quotation marks). All submissions will be open to public inspection and copying in the Public Disclosure Room, Pension and Welfare Benefits Administration, U.S. Department of Labor, 200 Constitution Avenue, NW, Room N–5638, Washington, DC, from 8:00 a.m. to 4:30 p.m., E.S.T.

FOR FURTHER INFORMATION CONTACT: Katherine Lewis, Office of Regulations and Interpretations, Pension and Welfare Benefits Administration, U.S. Department of Labor, 200 Constitution Avenue, NW, Washington, DC, 20210, (202) 219–8521 (not a toll-free number).

SUPPLEMENTARY INFORMATION:

A. Background

Section 1510(a) of the Taxpayer Relief Act of 1997 (TRA 97)[1] directs the Secretary of Labor to issue guidance designed to interpret the notice, election, consent, disclosure, time requirements, and related recordkeeping requirements of ERISA as applied to the use of new technologies by sponsors and administrators of retirement plans. Section 1510 further requires that the guidance maintain the protection of the rights of plan participants and beneficiaries. Any regulations applicable to this guidance may not be effective until the first plan year beginning at least six months after the issuance of final regulations.

The proposed disclosure rule would amend § 2520.104b–1(c) to establish a safe harbor pursuant to which all pension and welfare benefit plans covered by Title I of ERISA may satisfy the obligations described in ERISA section 104(b)(1) and 104(b)(3) to furnish summary plan descriptions (SPDs), summaries of material modifications (SMMs), updated SPDs, and summary annual reports (SARs) using electronic media. The proposed recordkeeping rule would provide standards concerning the use of electronic media, including electronic storage and automatic data processing (ADP) systems, for the maintenance and retention of records required by sections 107 and 209 of ERISA. In addition, the Department is inviting public comments on a number of issues relating to the use of new technologies in the administration of employee benefit plans that are not specifically addressed by the proposed rules.

The Department's regulation at 29 CFR 2520.104b–1 governs the delivery of information required to be furnished to participants and beneficiaries under Part I of Title I of ERISA. In April 1997, the Department, in accordance with a separate directive under section 101(c) of the Health Insurance Portability and Accountability Act of 1996 (HIPAA),[2] issued an interim disclosure rule, § 2520.104b–1(c), that provides a ''safe harbor'' for using electronic media to furnish SPDs, SMMs, and updated SPDs to participants of group health plans.[3] The Department invited and received public comments on the interim rule. However, the Department is deferring changes to the interim rule pending consideration of public comments on the broader-based rule proposed herein. The Department's objective is to avoid piecemeal rulemaking in this area by having the interim disclosure rule for group health plans and this proposal converge so that a single final rule is issued following consideration of public comments on the full range of issues relevant to the use by all welfare and pension plans covered by Title I of ERISA of electronic media as a method of furnishing documents under § 2520.104b–1. In this regard, comments previously submitted to the Department in connection with the interim rule need not be resubmitted. A discussion of the proposed rules contained in this document is set forth below.

B. The Proposed Regulations

1. Expanding the HIPAA Interim Disclosure Rule to All Welfare and Pension Plans Covered Under Title I of ERISA

The proposed disclosure rule would amend § 2520.104b–1(c) to establish a safe harbor pursuant to which all pension and welfare benefit plans covered by Title I of ERISA may satisfy certain disclosure obligations described in ERISA section 104(b)(1) and 104(b)(3) using electronic media. This would expand the safe harbor set forth in the interim disclosure rule for group health plans to all plans covered under Title I of ERISA and expand the disclosure

[1] Pub. L. 105–34, enacted August 5, 1997.

[2] Pub. L. 104–191, enacted August 21, 1996.

[3] See 62 FR 16979 (April 8, 1997).

documents covered by the safe harbor to include SARs. In the Department's view, a method of electronic delivery appropriate for the furnishing of SPDs, SMMs, and updated SPDs by group health plans would also be appropriate for furnishing those documents by other types of plans, and for furnishing SARs, given the similar nature of the information provided and similar furnishing requirements.[4] These actions are consistent with comments received by the Department in connection with the interim rule.

This proposal adopts the approach of the interim rule, which describes safe harbor conditions under which electronic disclosures will be deemed to satisfy the disclosure requirements under 29 CFR 2520.104b–1. As with the interim rule, the proposed amendment is intended to establish a safe harbor on which plan administrators may rely in delivering plan disclosures through electronic media, but is not intended to represent the exclusive means by which the requirements of § 2520.104b–1 may be satisfied using electronic media.

Proposed paragraph (c)(1) of § 2520.104b–1 sets forth the same conditions currently in the interim rule for group health plans. In this regard, the proposal provides, at paragraph (c)(1)(i)-(ii), that: (i) the administrator takes appropriate and necessary measures to ensure that the system for furnishing documents results in actual receipt by participants of transmitted information, such as through the use of a return-receipt electronic mail feature or periodic reviews or surveys by the plan administrator to confirm the integrity of the delivery system; and (ii) electronically delivered documents are prepared and furnished in a manner consistent with the style, format and content requirements applicable to the disclosure (*see* 29 CFR 2520.102–2 through 2520.102–5, and 29 CFR 2520.104b–10). Proposed paragraph (c)(1)(iii) requires notification to each participant, through electronic means or in writing, apprising the participant of the disclosure documents furnished electronically (e.g., SPDs, summaries of material changes to the plan, changes to information included in the SPD, and SARs), the significance of the documents (e.g., the document contains summary descriptions of changes in the benefits described in your SPD), and the participant's right to request and receive, free of charge, a paper copy of each such document from the plan administrator. The notification requirement is designed to ensure that participants who, for example, receive a disclosure document as an attachment to an electronically transmitted message or in the form of a message and hyperlink to a plan internet site will be put on notice that the communication contains important plan information. As the Department explained in issuing the interim rule, the safe harbor criteria are generally intended to ensure that a system of electronic communication utilized by a plan administrator for distribution of disclosure information results in the actual delivery of such information to participants, and that the information delivered is equivalent in both substance and form to the disclosure information the participants would have received had they been furnished the information in paper form.

As with the interim rule, it is the view of the Department that participants have a general right to receive required plan disclosures in paper form from the plan administrator. Accordingly, the proposal would require that where a plan administrator uses electronic media as the method for delivering required plan disclosures, participants must be afforded the opportunity to obtain the disclosures from the plan administrator in paper form, free of charge. The obligation to furnish paper copies of documents furnished through electronic media is set forth in proposed paragraph (c)(1)(iv). The Department specifically invites public comment on the relative costs and benefits of this requirement in light of the separate safe harbor requirement, discussed below, that participants must have the opportunity at their worksite to convert furnished documents from electronic form to paper form, free of charge.

Proposed paragraph (c)(2), like the interim rule, describes the participants with respect to whom the electronic delivery of plan disclosures will be deemed to be an acceptable method of delivery for fulfilling the disclosure obligation under § 2520.104b-1(b)(1). Such participants must have the ability to effectively access at their worksite documents furnished in electronic form, and the opportunity at their worksite to convert furnished documents from electronic form to paper form, free of charge.

Comments submitted on the interim disclosure rule for group health plans requested clarification of what constitutes a ''worksite'' for purposes of the safe harbor. It is the view of the Department that, for purposes of the safe harbor, a worksite would include any location where an employee is reasonably expected to perform his or her duties and where access to the employer's electronic information system is an integral part of those duties. In this regard, the Department believes that the actual location of the worksite (e.g., an employee's home, a client's office, or an employee's hotel room) is of less importance than the employee being reasonably expected to access the employer's information system in the course of performing his or her duties and, therefore, more likely to receive timely communication of plan information. Comments were also received requesting clarification of the safe harbor provisions requiring that participants have the opportunity to convert electronic documents to paper copies at their worksite location. The Department believes that this provision of the safe harbor may be satisfied by ensuring that participants have access to a printer at their principal worksite location. For example, if an employee works at home four days a week and at his or her employer's office one day a week, it is the view of the Department that the employee's principal worksite location would be his or her home. On the other hand, if an employee travels to the offices of various clients four days a week and is in the employer's office one day a week, it is the view of the Department that the employee's principal worksite location would be the employer's office.

2. Electronic Recordkeeping

Section 107 of ERISA provides, in relevant part, that ''[e]very person subject to a requirement to file any report or to certify any information therefor under this title or who would be subject to such a requirement but for an exemption or simplified reporting requirement * * * shall maintain records on the matters of which disclosure is required which will provide in sufficient detail the necessary basic information and data from which the documents thus required may be verified, explained, or clarified, and checked for accuracy and completeness, and shall include vouchers, worksheets,

[4] To the extent that other disclosure obligations under Title I of ERISA may be satisfied through the furnishing of an SPD, the furnishing of the SPD to a participant by electronic means in accordance with the proposed rule will satisfy such other disclosure requirements with respect to the participant the same as if the SPD were provided in paper form. The safe harbor provisions, however, are limited to communications to participants at their worksites. The safe harbor would not cover electronic communication of an SPD to a participant at his or her worksite as a way of satisfying the COBRA notice obligation under section 606(a)(1) to the covered employee's spouse even if the SPD contained the required COBRA information and it was furnished electronically to the participant at the time he or she commenced coverage under the plan. Elsewhere in this document the Department is specifically requesting comments on the use of electronic media to satisfy disclosure obligations with respect to beneficiaries, including spouses.

receipts, and applicable resolutions, and shall keep such records available for examination for a period of not less than six years after the filing date of the documents based upon the information which they contain * * *'' Persons required to retain records for purposes of section 107 include any person who is or may be required under Title I of ERISA to file any report (e.g., the plan administrator) or to certify any information for such reports (e.g., insurance carriers or other organizations which provide some or all of the benefits under the plan, banks or similar institutions which hold some or all of the assets of the plan, and plan sponsors). In addition to the record retention requirements of section 107, ERISA section 209 generally requires records to be maintained by employers with respect to each employee sufficient to determine the benefits due or which may become due to the employee under a pension benefit plan and authorizes the Secretary to prescribe regulations governing such records. In the case of a pension plan adopted by more than one employer, section 209(a)(2) requires employers to furnish to the plan administrator the information necessary for the administrator to maintain the records and requires the administrator to maintain the records.

No specific provision of Title I of ERISA or any regulation issued thereunder sets forth rules or standards regarding the use of electronic media as the form in which records are retained. The Department is proposing to adopt a new regulation, 29 CFR 2520.107–1, to provide standards concerning the use of electronic media, including electronic storage and ADP systems, for the maintenance and retention of records required by sections 107 and 209 of ERISA. The proposal, however, is not intended to define or address the types of records required to be maintained under sections 107 and 209, nor the period of time for which records must be retained under those sections of the Act.

In general, the proposed regulation provides that electronic media may be used for purposes of complying with the records maintenance and/or retention requirements of sections 107 and 209, provided: (1) The recordkeeping system has reasonable controls to ensure the integrity, accuracy, authenticity and reliability of the records kept in electronic form; (2) the electronic records are maintained in reasonable order, in a safe and accessible place, and in such manner as they may be readily inspected or examined (for example, the recordkeeping system should be capable of indexing, retaining, preserving, retrieving and reproducing the electronic records); (3) the electronic records can be readily converted into legible and readable paper copy as may be needed to satisfy reporting and disclosure requirements or any other obligation under Title I of ERISA, and (4) adequate records management practices are established and implemented (for example, following procedures for labeling of electronically maintained or retained records, providing a secure storage environment, creating back-up electronic copies and selecting an off-site storage location, observing a quality assurance program evidenced by regular evaluations of the electronic recordkeeping system including periodic checks of electronically maintained or retained records; and retaining paper copies of records that cannot be clearly, accurately or completely transferred to an electronic recordkeeping system).[5] The proposal also provides that the electronic recordkeeping system may not be subject to any agreement or limitation that would, directly or indirectly, compromise a person's ability to comply with any reporting and disclosure requirement or any other obligation under Title I of ERISA. In addition, the proposed regulation provides guidance regarding when original records may be discarded after they have been transferred to electronic media.

The Department wishes to emphasize that the duty to maintain records in accordance with Title I of ERISA cannot be avoided by contract, delegation or otherwise. Use of a third party to provide an electronic recordkeeping system does not relieve the person responsible for the maintenance and retention of records required under Title I of ERISA of the responsibilities described therein. For example, if the administrator of a plan arranges with a service provider to perform functions with respect to the plan and, pursuant to the arrangement, the service provider creates, maintains, retains or prepares the plan's records, and keeps physical custody of those records, the statutory requirements relating to such records remain with the administrator, and the administrator must make such agreements and arrangements with the service provider as are necessary to ensure that the records are properly maintained and retained.[6]

Furthermore, it is the Department's view that persons subject to recordkeeping obligations under section 107 and section 209 of ERISA would, pursuant to Department's investigative authority under section 504 of ERISA, be required to provide the Department, upon request, with the necessary equipment and resources (including software, hardware and personnel) as would be needed for inspection, examination and conversion of electronic records into legible and readable paper copy or other usable form acceptable to the Department. Similarly, such persons would be required to have the capability of converting electronic records into usable form, including, at a minimum, paper copy, as may be necessary to satisfy reporting, disclosure and other obligations under Title I of ERISA.

C. Effective Date and Good Faith Compliance

In accordance with section 1510 of TRA 97, final regulations issued in connection with this proposal will be effective no earlier than the first plan year beginning at least six months after the issuance of such final regulations. In the absence of final regulations or other guidance on using electronic media for purposes of complying with ERISA's Title I disclosure and recordkeeping requirements, it is the Department's view that good faith compliance with the standards set forth in these proposed regulations will, with respect to the disclosure and recordkeeping requirements specifically addressed in the proposed regulations, constitute compliance with a reasonable interpretation of 29 CFR 2520.104b–1 and ERISA sections 107 and 209. The interim rule pertaining to electronic disclosures continues to be effective for group health plans.

D. Request for Public Comments on Electronic Disclosure and Recordkeeping Issues

In requiring guidance to be issued on the use of new technologies, section 1510(a) of TRA 97 specifically references guidance regarding notice, election, consent, disclosure, time

[5] The proposed standards are not inconsistent with guidance issued by the Internal Revenue Service under section 6001 of the Internal Revenue Code of 1986 regarding the maintenance of books and records on an electronic storage system or within an ADP system. *See* Rev. Proc. 97–22, 1997–13 I.R.B. 9, and Rev. Proc. 98–25, 1998–11 I.R.B. 7. The Department also notes that the proposed regulation does not specifically address the use of microfilm and microfiche for storing employee benefit plan records. The Department previously addressed this issue in an information letter to Gregg M. Goodman from Robert J. Doyle (August 23, 1983). The letter stated that, in the absence of regulations providing otherwise, the retention of microfilm, microfiche or similar reproduction of records, in lieu of original records, would not violate the provisions of sections 107 or 209 provided certain conditions were met.

[6] See Advisory Opinion 84–19A (April 26, 1984).

requirements, and related recordkeeping requirements. Some requirements in these areas occur only under the Internal Revenue Code or relate to sections of Title I of ERISA over which the Internal Revenue Service has regulatory authority pursuant to Reorganization Plan No. 4 of 1978.[7] With respect to ERISA provisions under the Department's authority, the Department is continuing to evaluate what guidance relating to new technologies is appropriate for pension and welfare benefit plans covered by Title I of ERISA. To aid in these efforts, the Department is interested in obtaining views and comments from the benefit plan community on new technology issues where the Department's guidance may be useful. Specifically, the Department invites information and comments on the following:

1. Should the standards proposed herein regarding use of electronic media be expanded to other plan disclosures (e.g., individual benefit statements, COBRA notices upon a ''qualifying event,'' or notices concerning qualified domestic relations orders or qualified medical child support orders), and if so, to which disclosures or types of disclosures, and under what conditions to safeguard the rights of participants and beneficiaries?

2. Do time-sensitive disclosures, such as notices that activate the running of time periods for participants to take actions, require additional safeguards, and if so, what safeguards?

3. Under what circumstances would it be appropriate for electronic media to be used for communications at places other than worksites? For example, should participants who are on paid leave or retired be permitted to elect that electronic disclosures be made to them at home or elsewhere? Should spouses and other beneficiaries, such as alternate payees under qualified domestic relations orders (QDROs) or qualified child medical support orders (QCMSOs), be permitted to elect that disclosures be made to them by electronic means? Should such elections be required to be renewed periodically? If so, how often and by what means?

4. The Department also requests comments on the use of, and standards for, electronic media (i) for making materials described in ERISA § 104(b)(2) available for examination by plan participants and beneficiaries; and (ii) for responding to requests by participants and beneficiaries for copies of materials described in ERISA § 104(b)(4) and § 2520.104b–1(b)(2).

5. Is guidance on the use of electronic media needed under any other provisions of Title I of ERISA?

[7] 43 FR 47713, October 17, 1978, effective December 31, 1978.

Executive Order 12866 Statement

Under Executive Order 12866, the Department must determine whether the regulatory action is ''significant'' and therefore subject to the requirements of the Executive Order and subject to review by the Office of Management and Budget (OMB). Under section 3(f), the order defines a ''significant regulatory action'' as an action that is likely to result in a rule (1) having an annual effect on the economy of $100 million or more, or adversely and materially affecting a sector of the economy, productivity, competition, jobs, the environment, public health or safety, or State, local or tribal governments or communities (also referred to as ''economically significant''); (2) creating serious inconsistency or otherwise interfering with an action taken or planned by another agency; (3) materially altering the budgetary impacts of entitlement grants, user fees, or loan programs or the rights and obligations of recipients thereof; or (4) raising novel legal or policy issues arising out of legal mandates, the President's priorities, or the principles set forth in the Executive Order. The Department has determined that this regulatory action is not significant within the meaning of the Executive Order.

Paperwork Reduction Act

The Department of Labor, as part of its continuing effort to reduce paperwork and respondent burden, conducts a preclearance consultation program to provide the general public and Federal agencies with an opportunity to comment on proposed and continuing collections of information in accordance with the Paperwork Reduction Act of 1995 (PRA 95) (44 U.S.C. 3506(c)(2)(A)). This helps to ensure that requested data can be provided in the desired format, reporting burden (time and financial resources) is minimized, collection instruments are clearly understood, and the impact of collection requirements on respondents can be properly assessed.

Currently, the Pension and Welfare Benefits Administration is soliciting comments concerning the two information collection requests (ICRs) which would be affected by the proposal with respect to the use of electronic communications and recordkeeping by employee benefit plans. Copies of the ICRs may be obtained by contacting the office listed in the addressee section of this notice.

The Department has submitted the information collections which would be revised by these proposals to OMB for review in accordance with 44 U.S.C. 3507(d). The Department and OMB are particularly interested in comments that:

- Evaluate whether the proposed collection of information is necessary for the proper performance of the functions of the agency, including whether the information will have practical utility;
- Evaluate the accuracy of the agency's estimate of the burden of the proposed collection of information, including the validity of the methodology and assumptions used;
- Enhance the quality, utility, and clarity of the information to be collected; and
- Minimize the burden of the collection of information on those who are to respond, including through the use of appropriate automated, electronic, mechanical, or other technological collection techniques or other forms of information technology, e.g., permitting electronic submission of responses.

Comments should be sent to the Office of Information and Regulatory Affairs, Office of Management and Budget, Room 10235, New Executive Office Building, Washington, DC 20503; Attention: Desk Officer for the Pension and Welfare Benefits Administration. Although comments may be submitted through March 29, 1999, OMB requests that comments be received within 30 days of publication of the Notice of Proposed Rulemaking to ensure their consideration.

Addresses (PRA 95): Address requests for copies of the ICR to Gerald B. Lindrew, Office of Policy and Research, U.S. Department of Labor, Pension and Welfare Benefits Administration, 200 Constitution Avenue, NW, Room N–5647, Washington, DC 20210. Telephone: (202) 219–4782; Fax: (202) 219–4745. These are not toll-free numbers.

The ICRs affected by this proposal are included in the disclosures required under ERISA to be made to participants and beneficiaries of employee pension and welfare plans, including the Summary Plan Description (SPD) and Summary of Material Modifications (SMM), and the Summary Annual Report (SAR). The SPD and SMM requirements are included in a single ICR for purposes of approval under PRA 95. Although the use of electronic media to satisfy disclosure requirements was not precluded by existing regulations,

and was in fact specifically addressed in the interim disclosure rule under HIPAA, the Department has not previously estimated the degree to which electronic media may be used for this purpose.

The burden reductions estimated to result from the use of electronic media for required disclosure purposes are based upon cost and hour burdens for the Department's existing ICRs for the SPD/SMM and SAR as adjusted for the numbers of plans and participants assumed to have access to the necessary electronic resources to send and receive the disclosures, and the number of plan sponsors assumed to choose to make use of their electronic resources to make required disclosures to plan participants.

This analysis does not address the provisions of the proposal which relate to electronic recordkeeping because the proposal is not intended to define or address the types of records required to be maintained, or the period of time for which records must be maintained. Instead, the proposal is intended to describe certain minimum electronic recordkeeping standards which are believed to be consistent with reasonable and prudent business practices.

The Department is not aware of any data source which would directly identify the ERISA plan sponsors who either use or will use electronic media for required disclosures, and the number of participants in those plans with access to electronic media. Therefore, estimates have been developed using information concerning the likely prerequisites for the use of electronic disclosure by ERISA plan administrators.

These prerequisites would likely include the use of electronic media by employers, access to electronic media and electronic mail or Internet/Intranet applications by employees in the course of their work, employer sponsorship of a pension and/or welfare plan, and a determination by the employer or plan administrator that disclosure through electronic media would be either cost effective or beneficial in some other way that would outweigh cost concerns. Another indicator of the likelihood of the use of electronic disclosures might be the employer's existing use of electronic media for general communication with employees.

The Department sought information concerning the use of electronic technologies in the workplace and for communication with employees. Data published in the 1997 Current Population Survey (CPS) indicates that approximately 50 percent of employees have access to computers at work, and that somewhat smaller percentages of employees use electronic mail or the Internet at work. No information was found to indicate how these rates may differ in relation to firm size. However, it is assumed that access rates are somewhat lower in smaller firms and higher in larger firms.

Two recent surveys offer data concerning companies' use of information technologies. According to a 1997/1998 survey conducted by Watson Wyatt Worldwide [8], 59 percent of respondent companies currently use electronic technologies for corporate communications, and an additional 34 percent plan to do so in the next year. Twenty-two percent of the survey respondents reported that they currently use electronic technologies for benefits enrollment, retirement and savings plans, with another 53 percent planning to do so in the next year. This survey also indicated that 82 percent of respondents' U.S. employees made use of desktop computers, and 50 percent of the respondents' employees had access to Internet applications. A survey conducted by Sedgwick Noble Lowndes [9] indicates that 92 percent of respondents either use or anticipate using the Internet, with primary uses being electronic mail and distribution of information. Of the 59 percent of respondents indicating utilization of Intranet technology, 53 percent indicated the primary use would be providing general information to employees.

It is not known how the employee groups considered in these sources compare to the participants of ERISA-covered pension and welfare plans. However, for purposes of this analysis, access to and use of electronic media by participants is assumed to resemble that of employees at large. As a result, it is assumed that 50 percent of all plan participants, and beneficiaries (35 percent in plans with fewer than 100 participants, and 65 percent in plans with 100 or more participants) would potentially have access to electronic disclosures.

This number is further reduced based on the number of employers or plan sponsors considered likely to make use of electronic disclosures, based on assessments of the potential cost effectiveness and business value of electronic disclosure. Electronic communication with employees is generally perceived to have positive business value due to increased speed, convenience, and ease of use. Costs may in many cases be reduced in direct proportion to the reduction of handling, mailing, and materials costs. Added costs would typically arise from time required to prepare and monitor the receipt of electronic mail messages, time to prepare and make documents available for viewing and downloading at a specific Internet or Intranet site, and investment in system development and equipment.

System development and equipment costs have not been assessed here because it is assumed that participant disclosures will be made by plan administrators in settings in which equipment and electronic communication is already in use. The Watson Wyatt and Sedgwick Noble Lowndes surveys appear to support the conclusion that a primary purpose of system development is general communication with employees.

Electronic distribution of the SAR is estimated to be cost effective in many cases because a large proportion of the total cost and hour burden for the SAR comes from materials, mailing, and handling. Mailing and handling costs of the 235,000,000 SARs estimated to be distributed each year could be significantly reduced, while the added cost to make what is typically a one page document available electronically would be minimal. Given this potential for cost effectiveness, and the rates of use of electronic communication by respondents to the surveys cited, it is assumed that plan administrators for 50 percent of participants with access to electronic media will distribute their SARs electronically. The same assumption is made for electronic disclosure of the SMM, although it is part of a separate ICR.

This burden estimate for the SAR takes into consideration the fact that some participants of those plans will not have appropriate access to electronic media, and some will either prefer paper-based SARs or request paper-based SARs in addition to the electronic version. The estimate also includes the added costs of monitoring the receipt of electronic communications by participants.

The electronic disclosure of the SPD is considered to be somewhat less cost effective, and as a result, somewhat less likely to be implemented by plan administrators. Although improvements in speed of delivery and ease of use could be accomplished by electronic distribution of the SPD and related or incorporated documents, such as group health plan provider directories, these

[8] "Forging Global Links Through Web Technology, A Survey Report on Human Resources and the Web," Watson Wyatt Worldwide, 1998.

[9] "Employee Benefits Minisurvey," Sedgwick Noble Lowndes, September, 1998.

are commonly lengthy documents which would be more time-consuming to prepare for electronic access through electronic mail, Internet, or Intranet. These materials are also frequently used away from the worksite by family members other than the employee, which may prevent the electronic version from eliminating the need for a paper-based version. While there may be significant value in making the SPD available electronically, the effort to produce the electronic version may not result in replacement of the paper-based version or significant aggregate cost reductions. Therefore, for purposes of this analysis it is assumed that 10 percent of participants with the potential to receive or gain access to SPDs electronically will actually receive only an electronic version. The Department believes that use of electronic technology for the distribution of SPDs can be expected to increase significantly in the future as plan administrators seek opportunities to make increasing and more cost effective use of electronic technologies in other areas of plan administration. The Department requests comments concerning plans' current and anticipated use of electronic technology for distribution of the SPD.

The estimates of burden hour and cost savings derived from these assumptions are shown below. It is assumed that these savings will be recognized immediately, due either to the good faith compliance described in this preamble, or to the existing use of electronic media by plan sponsors. The Department requests comments on each of the assumptions used in this analysis.

Type of Review: Revision of currently approved collections of information.

Agency: Pension and Welfare Benefits Administration.

Titles: Summary Plan Description Requirements under ERISA (SMM/SPD); ERISA Summary Annual Report (SAR) Requirement.

Affected Public: Individuals or households; Business or other for-profit; Not-for-profit institutions.

Other information:

	SMM/SPD	SAR
OMB Number	1210–0039	1210–0040
Frequency of Response	On occasion	Annually
Respondents	2,027,293	817,000
Responses: [10].		
1999	52,115,000	235,000,000
2000	160,703,000	235,000,000
Estimated Burden Hour Reduction:		
1999	68,867	560,043
2000	172,735	.....
Estimated Total Burden Hours:.		
1999	746,983	1,369,577
2000	1,928,889	1,369,577
Estimated Annual Cost Reduction:.		
1999	$3,611,969	16,350,000
2000	$8,249,376	.....
Estimated Total Annual Costs: [11].		
1999	$99,898,165	$111,375,000
2000	216,316,365	111,375,000

[10] The number of respondents and the related cost and hour burdens for the SMM/SPD are estimated to increase in 2000 as a result of Interim Final Rules published on September 9, 1998 (63 FR 48371) and a Notice of Proposed Rulemaking published on September 9, 1998 (63 FR 48376), both of which would amend SPD content requirements.

[11] Operating and Maintenance Costs.

Comments submitted in response to this notice will be summarized and/or included in the request for OMB approval of the information collection request; they will also become a matter of public record.

Regulatory Flexibility Act

The Regulatory Flexibility Act (5 U.S.C. 601 *et seq.*) (RFA) imposes certain requirements with respect to federal rules that are subject to the notice and comment requirements of section 553(b) of the Administrative Procedure Act (5 U.S.C. 551 *et seq.*) and which are likely to have a significant economic impact on a substantial number of small entities. If an agency determines that a proposed rule is likely to have a significant economic impact on a substantial number of small entities, section 603 of the RFA requires that the agency present an initial regulatory flexibility analysis at the time of the publication of the notice of proposed rulemaking describing the impact of the rule on small entities, and seeking public comment on such impact. Small entities include small businesses, organizations, and governmental jurisdictions.

This proposed rule would establish a safe harbor pursuant to which all pension and welfare plans covered under Title I of ERISA may satisfy disclosure obligations described in ERISA section 104(b)(1) and 104(b)(3) using electronic media. It would also establish certain minimum standards for the use of electronic media for maintenance and retention of records required by sections 107 and 209 of ERISA. The proposal would not, however, require any plan or entity sponsoring a plan to use electronic media for either disclosure or recordkeeping purposes. The rule may, therefore, have no economic impact on plans and sponsors who choose not to make use of electronic media for these purposes.

A marginal expense may be incurred by plans or sponsors that already use electronic media for recordkeeping purposes to conform their procedures to the minimum standards described in this proposal. The Department believes this expense would be limited because the standards proposed are not intended to establish detailed methods of compliance, but rather to describe general performance objectives which are consistent with the reasonable and

prudent business practices already required of ERISA plan fiduciaries. Under the proposal, plans and sponsors would retain the flexibility to make any changes necessary, for example, to ensure the integrity and safety of the records, or to improve indexing and ease of retrieval, in the manner which is most cost effective for them.

On this basis, the undersigned certifies that this rule, if promulgated as proposed, will not have a significant impact on a substantial number of small entities regardless of whether one uses the definition of small entity found in regulations issued by the Small Business Administration (13 CFR 121.201) or one defines small entity, on the basis of section 104(a)(2) of the Employee Retirement Income Security Act of 1974 (ERISA), as an employee benefit plan with fewer than 100 participants. In the Department's view, this proposed rule will not significantly impact entities in any size category. The Department requests comments on this certification, and seeks additional information from small entities regarding what, if any, special problems they might encounter if the proposal were to be adopted, and what changes, if any, could be made to minimize those problems.

Small Business Regulatory Enforcement Fairness Act

The rule being issued here is subject to the provisions of the Small Business Regulatory Enforcement Fairness Act of 1996 (5 U.S.C. 801 *et seq.*) and, if finalized, will be transmitted to Congress and the Comptroller General for review. The rule is not a ''major rule'' as that term is defined in 5 U.S.C. 804, because it is not likely to result in (1) an annual effect on the economy of $100 million or more; (2) a major increase in costs or prices for consumers, individual industries, or federal, State, or local government agencies, or geographic regions; or (3) significant adverse effects on competition, employment, investment, productivity, innovation, or on the ability of United States-based enterprises to compete with foreign-based enterprises in domestic or export markets.

Unfunded Mandates Reform Act

For purposes of the Unfunded Mandates Reform Act of 1995 (Pub. L. 104–4), as well as Executive Order 12875, this proposed rule does not include any federal mandate that may result in expenditures by State, local, or tribal governments, or the private sector, which may impose an annual burden of $100 million.

Statutory Authority

This regulation is proposed pursuant to the authority in sections 104(b), 107, 209, and 505 of ERISA (Pub. L. 93–406, 88 Stat. 894, 29 U.S.C. 1027, 1059, 1134, 1135) and under Secretary of Labor's Order No. 1–87, 52 FR 13139, April 21, 1987.

List of Subjects in 29 CFR Part 2520

Accounting, Employee benefit plans, Employee Retirement Income Security Act, Pensions, Reporting and Recordkeeping requirements.

For the reasons set forth above, Part 2520 of Title 29 of the Code of Federal Regulations is amended as follows:

PART 2520—[AMENDED]

1. The authority for Part 2520 is revised to read as follows:

Authority: Secs. 101, 102, 103, 104, 105, 107, 109, 110, 111(b)(2), 111(c), 209, and 505, Pub. L. 93–406, 88 Stat. 840–52, 865, 893 and 894 (29 U.S.C. 1021–1025, 1027, 1029–31, 1059, 1134 and 1135); Secretary of Labor's Order No. 27–74, 13–76, 1–87, and Labor Management Services Administration Order 2–6. Sections 2520.102–3, 2520.104b–1 and 2520.104b–3 also are issued under sec. 101(a), (c) and (g)(4) of Pub. L. 104–191, 110 Stat. 1936, 1939, 1951 and 1955 and, sec. 603 of Pub. L. 104–204, 110 Stat. 2935 (29 U.S.C. 1185 and 1191c). Sections 2520.104b–1 and 2520.107 are also issued under the authority of sec. 1510 of Pub. L. 105–37, 111 Stat. 1114.

2. Section 2520.104b-1 is amended by revising paragraph (c) to read as follows:

§ 2520.104b–1 Disclosure

* * * * *

(c) *Disclosure through electronic media.* (1) The administrator of an employee benefit plan furnishing documents described in section 104(b)(1) or 104(b)(3) of the Act through electronic media will be deemed to satisfy the requirements of paragraph (b)(1) of this section with respect to participants described in paragraph (c)(2) of this section if:

(i) The administrator takes appropriate and necessary measures to ensure that the system for furnishing documents results in actual receipt by participants of transmitted information and documents (e.g., uses return-receipt electronic mail feature or conducts periodic reviews or surveys to confirm receipt of transmitted information);

(ii) Electronically delivered documents are prepared and furnished in a manner consistent with the applicable style, format and content requirements (See 29 CFR 2520.102–2 through 2520.102–5, and 29 CFR 2520.104b–10);

(iii) Each participant is provided notice, through electronic means or in writing, apprising the participant of the document(s) to be furnished electronically, the significance of the document (e.g., the document describes changes in the benefits provided by your plan) and the participant's right to request and receive, free of charge, a paper copy of each such document; and (iv) Upon request of any participant, the administrator furnishes, free of charge, a paper copy of any document delivered to the participant through electronic media.

(2) For purposes of paragraph (c)(1) of this section, the furnishing of documents through electronic media satisfies the requirements of paragraph (b)(1) of this section only with respect to participants:

(i) Who have the ability at their worksite to effectively access documents furnished in electronic form; and (ii) Who have the opportunity at their worksite to readily convert furnished documents from electronic form to paper form free of charge.

* * * * *

3. By adding a new subpart G to part 2520 to read as follows:

Subpart G—Recordkeeping Requirements

Sec.
2520.107–1 Use of electronic media for maintenance and retention of records.

Subpart G—Recordkeeping Requirements

§ 2520.107–1 Use of electronic media for maintenance and retention of records.

(a) *Scope and purpose.* Sections 107 and 209 of the Employee Retirement Income Security Act of 1974, as amended (ERISA) contain certain requirements relating to the maintenance of records for reporting and disclosure purposes and for determining the pension benefits to which participants and beneficiaries are or may become entitled. This section provides standards applicable to both pension and welfare plans concerning the use of electronic media for the maintenance and retention of records required to be kept under sections 107 and 209 of ERISA.

(b) *General requirements.* The record maintenance and retention requirements of sections 107 and 209 of ERISA will be satisfied when using electronic media if:

(1) The electronic recordkeeping system has reasonable controls to ensure the integrity, accuracy, authenticity and reliability of the records kept in electronic form;

(2) The electronic records are maintained in reasonable order and in a safe and accessible place, and in such manner as they may be readily

inspected or examined (for example, the recordkeeping system should be capable of indexing, retaining, preserving, retrieving and reproducing the electronic records);

(3) The electronic records are readily convertible into legible and readable paper copy as may be needed to satisfy reporting and disclosure requirements or any other obligation under Title I of ERISA;

(4) The electronic recordkeeping system is not subject, in whole or in part, to any agreement or restriction that would, directly or indirectly, compromise or limit a person's ability to comply with any reporting and disclosure requirement or any other obligation under Title I of ERISA; and

(5) Adequate records management practices are established and implemented (for example, following procedures for labeling of electronically maintained or retained records, providing a secure storage environment, creating back-up electronic copies and selecting an off-site storage location, observing a quality assurance program evidenced by regular evaluations of the electronic recordkeeping system including periodic checks of electronically maintained or retained records; and retaining paper copies of records that cannot be clearly, accurately or completely transferred to an electronic recordkeeping system).

(c) *Legibility and readability.* All electronic records must exhibit a high degree of legibility and readability when displayed on a video display terminal and when reproduced in paper form. The term ''legibility'' means the observer must be able to identify all letters and numerals positively and quickly to the exclusion of all other letters or numerals. The term ''readability'' means that the observer must be able to recognize a group of letters or numerals as words or complete numbers.

(d) *Disposal of original paper records.* Original paper records may be disposed of any time after they are transferred to an electronic recordkeeping system that complies with the requirements of this section, except such original records may not be discarded if they have legal significance or inherent value as original records such that an electronic reproduction would not constitute a duplicate record (for example, notarized documents, insurance contracts, stock certificates, and documents executed under seal).

Signed at Washington, DC, this 25th day of January, 1999.

Leslie B. Kramerich,

Deputy Assistant Secretary for Policy, Pension and Welfare Benefits Administration, U.S. Department of Labor.

[FR Doc. 99–2006 Filed 1–27–99; 8:45 am]

BILLING CODE 4510–29–P

federal register

Thursday
January 28, 1999

Part IV

Congressional Budget Office

Transmittal of Sequestration Preview Report for Fiscal Year 2000 to the Congress and the Office of Management and Budget; Notice

CONGRESSIONAL BUDGET OFFICE

Notice of Transmittal of Sequestration Preview Report for Fiscal Year 2000 to the Congress and the Office of Management and Budget

Pursuant to Section 254(b) of the Balanced Budget and Emergency Deficit Control Act of 1985 (2 U.S.C. 904(b)), the Congressional Budget Office hereby reports that it has submitted its Sequestration Preview Report for Fiscal Year 2000 to the House of Representatives, the Senate, and the Office of Management and Budget.

David M. Delquadro,

Assistant Director, Administration and Information Division, Congressional Budget Office.

[FR Doc. 99–2269 Filed 1–27–99; 11:22 am]

BILLING CODE 1450–01–M

Reader Aids

Federal Register

Vol. 64, No. 18

Thursday, January 28, 1999

CUSTOMER SERVICE AND INFORMATION

Federal Register/Code of Federal Regulations

General Information, indexes and other finding aids	**202–523–5227**
Laws	**523–5227**
Presidential Documents	
Executive orders and proclamations	**523–5227**
The United States Government Manual	**523–5227**
Other Services	
Electronic and on-line services (voice)	**523–4534**
Privacy Act Compilation	**523–3187**
Public Laws Update Service (numbers, dates, etc.)	**523–6641**
TTY for the deaf-and-hard-of-hearing	**523–5229**

ELECTRONIC RESEARCH

World Wide Web

Full text of the daily Federal Register, CFR and other publications:

http://www.access.gpo.gov/nara

Federal Register information and research tools, including Public Inspection List, indexes, and links to GPO Access:

http://www.nara.gov/fedreg

E-mail

PENS (Public Law Electronic Notification Service) is an E-mail service that delivers information about recently enacted Public Laws. To subscribe, send E-mail to

listproc@lucky.fed.gov

with the text message:

subscribe publaws-l <firstname> <lastname>

Use listproc@lucky.fed.gov only to subscribe or unsubscribe to PENS. We cannot respond to specific inquiries at that address.

Reference questions. Send questions and comments about the Federal Register system to:

info@fedreg.nara.gov

The Federal Register staff cannot interpret specific documents or regulations.

FEDERAL REGISTER PAGES AND DATES, JANUARY

1–384 4
385–730 5
731–984 6
985–1096 7
1097–1500 8
1501–1714 11
1715–2114 12
2115–2418 13
2419–2544 14
2545–2798 15
2799–2988 19
2989–3200 20
3201–3392 21
3393–3620 22
3621–3806 25
3807–4028 26
4029–4284 27
4285–4516 28

CFR PARTS AFFECTED DURING JANUARY

At the end of each month, the Office of the Federal Register publishes separately a List of CFR Sections Affected (LSA), which lists parts and sections affected by documents published since the revision date of each title.

3 CFR

Proclamations:
7162 2989
7163 2991
Executive Orders:
11348 (See EO 13111) 2793
12543 (See Notice of Dec. 30, 1998) 383
12544 (See Notice of Dec. 30, 1998) 383
12947 (See Notice of Jan. 20, 1999) 3393
13099 (See Notice of Jan. 20, 1999) 3393
13110 2419
13111 2793
Administrative Orders:
Presidential Determinations:
No. 99–9 of December 24, 1998 983
Notices:
December 30, 1998 383
January 20, 1999 3393

5 CFR

550 1501
2634 2421
2635 2421
2636 2421
Proposed Rules:
731 4336

7 CFR

1 3395
254 1097
301 .....385, 4285
319 2993
353 1098
801 731
905 3807
930 387
932 4286
982 2422
985 2799
989 2425
993 3621
1260 3814
1464 2802
1788 1
1951 392
Proposed Rules:
47 4342
300 2151
319 .....2151, 3049, 4347
782 2152
932 4350
981 430
993 3660
1307 4353
1308 4353

9 CFR

Ch. III 2803, 3340
50 3340
52 2545
77 3340
78 .....5, 394
91 3340
301 732
317 732
318 732
320 732
381 732
Proposed Rules:
1 4356
3 4356
93 2449

10 CFR

600 4029
Proposed Rules:
30 3789
31 3052
32 3052
40 3789
50 .....57, 432, 3790, 3791
70 .....1542, 3790
72 1542
430 .....1272, 1545

12 CFR

563 2805
563b 2805
960 2550
Proposed Rules:
701 .....58, 776
713 58
715 776
741 .....58, 776

13 CFR

120 2115
Proposed Rules:
121 2153
125 2153
134 3454
140 3454

14 CFR

25 3201
39 ...5, 395, 749, 751, 985, 987, 989, 1106, 1108, 1110, 1112, 1114, 1116, 1118, 1502, 1715, 1716, 1994, 2016, 2038, 2061, 2428, 2551, 2552, 2555, 2556, 2558, 2559, 2560, 2810, 2813, 2816, 2817, 2819, 2821, 3202, 3204, 3816, 3817, 3819, 3821, 3823, 3826, 4029, 4288, 4290, 4291
71 .....8, 9, 10, 11, 12, 13, 1716,

2119, 2120, 2562, 2563, 2565, 2823, 2824, 2825, 2827, 3009, 3010, 3206, 3207, 3208, 3210, 3396, 3397, 3396, 3397, 3590, 3591, 3828, 3829, 3830, 3831, 3832, 3833, 3834, 3835
73 3623
91 1076
97 ....1717, 1724, 2828, 2830
121 ....958, 1076, 3836
125 1076
135 ....958, 1076, 3836
145 ....958, 3836
201 3211
212 3212

Proposed Rules:
39 ....435, 438, 441, 443, 445, 785, 787, 1545, 1549, 1552, 2157, 2161, 2863, 3052, 3226, 4061, 4367, 4370, 4372
71 ...60, 447, 1142, 1554, 1555, 1557, 1558, 1559, 1560, 1561, 1562, 1563, 1564, 1565, 2449, 2450, 2452, 2453, 2605, 2864, 2866, 3228, 3664, 3665, 3666
93 ....2086, 3055
234 3883
389 3229

15 CFR

740 2429
742 ....2429, 3213
743 3213
744 1120
748 2429
772 1120
902 ....13, 3624, 4030

Proposed Rules:
806 2454

16 CFR

4 3011
305 926
1615 ....2832, 2833
1616 ....2832, 2833

Proposed Rules:
Ch. 1 3668
308 61
1213 3456
1500 3456
1513 3456
1615 2867
1616 2867

17 CFR

1 ....16, 3340
3 1725
145 24
147 24
210 1728
229 1728
232 2843
240 ....1728, 2843
249 ....1728, 2843
275 2566
279 2120
405 1735

Proposed Rules:
30 1566

18 CFR

1301 4044

Proposed Rules:
161 789
250 789
284 789
430 1763

19 CFR

123 27
142 27
162 1122
178 27

20 CFR

Proposed Rules:
655 628
656 628

21 CFR

2 396
3 396
5 396
10 396
12 396
16 396
20 396
25 396
50 396
54 396
56 396
58 396
60 396
70 396
71 396
172 1758
173 1758
175 2567
178 ....34, 2854
184 ....404, 1758
200 396
201 396
202 396
206 396
207 396
210 396
211 396
299 396
300 396
310 396
312 396
314 396
316 396
320 396
333 396
369 396
510 396
514 396
520 ....396, 1503, 1761, 2121
522 396
524 396
529 396
556 1503
558 ....991, 2855
564 4293
800 396
801 396
807 ....396, 1762
809 396
812 396
860 396
862 1123
892 1123
1308 4050

Proposed Rules:
2 448
3 448
5 448
10 448
12 448
16 448
20 448
25 448
50 448
54 448
56 448
58 448
60 448
70 448
71 448
101 ....1765, 3250
200 448
201 448
202 448
206 448
207 448
210 448
211 448
216 996
299 448
300 448
310 448
312 448
314 448
315 457
316 448
320 448
333 448
369 448
510 448
514 448
520 448
522 448
524 448
529 448
601 457
800 448
801 ....448, 3255
807 448
809 448
812 448
860 448
876 62

22 CFR

41 35

Proposed Rules:
171 789

24 CFR

5 1504
6 3796
180 3796
206 2984
570 3796
1000 3014

25 CFR

542 590

26 CFR

1 ....1125, 1505
301 ....2568, 3398, 3405, 3631, 3837

Proposed Rules:
1 ....790, 794, 805, 1143, 1148, 1571, 2164, 3257, 3457, 4374
301 ....1148, 2606, 3461, 3462, 3669, 3886
801 457

27 CFR

4 ....753, 2122
5 2122
7 2122
9 3015
13 2122
19 2122

Proposed Rules:
4 813

28 CFR

0 4294

Proposed Rules:
302 1082

29 CFR

1910 204
4044 2569

Proposed Rules:
2520 4506
2510 3463
2560 65

30 CFR

913 3413
926 ....3603, 3611
934 1127
936 3420

Proposed Rules:
204 3361
208 ....1930, 3262
241 ....1930, 3262
242 ....1930, 3262
243 ....1930, 3262
250 ....1930, 3262
290 ....1930, 3262
917 ....816, 3670

31 CFR

356 3632

Proposed Rules:
Ch. II 1149
1 1152
100 4063

32 CFR

290 1130
706 ....2571, 2572, 3423

33 CFR

1 2868
2 2868
3 2868
4 2868
5 2868
6 2868
7 2868
8 2868
9 2868
10 2868
11 2868
12 2868
13 2868
14 2868
15 2868
16 2868
17 2868
18 2868
19 2868
20 2868
21 2868
22 2868
23 2868
24 2868
25 2868
26 2868
27 2868

28 2868
29 2868
30 2868
31 2868
32 2868
33 2868
34 2868
35 2868
36 2868
37 2868
38 2868
39 2868
40 2868
41 2868
42 2868
43 2868
44 2868
45 2868
46 2868
47 2868
48 2868
49 2868
50 2868
51 2868
52 2868
53 2868
54 2868
55 2868
56 2868
57 2868
58 2868
59 2868
60 2868
61 2868
62 2868
63 2868
64 2868
65 2868
66 2868
67 2868
68 2868
69 2868
70 2868
71 2868
72 2868
73 2868
74 2868
75 2868
76 2868
77 2868
78 2868
79 2868
80 2868
81 2868
82 2868
83 2868
84 2868
85 2868
86 2868
87 2868
88 2868
89 2868
90 2868
91 2868
92 2868
93 2868
94 2868
95 2868
96 2868
97 2868
98 2868
99 2868
100 ....2868, 3840
101 2868
102 2868
103 2868
104 2868
105 2868
106 2868
107 2868
108 2868
109 2868
110 2868
111 2868
112 2868
113 2868
114 2868
115 2868
116 2868
117 ...35, 405, 406, 1516, 2868, 3424
118 2868
119 2868
120 2868
121 2868
122 2868
123 2868
124 2868
165 ....2431, 4052, 4053

Proposed Rules:

100 66
110 ....3888, 3889
117 ....1155, 3464
126 1770

34 CFR

650 3197

36 CFR

223 406
242 1276

Proposed Rules:

13 1573
1001 2870
1002 2870
1003 2870
1004 2870
1005 2870
1006 2870

37 CFR

Proposed Rules:

251 ....3055, 3746

38 CFR

3 1131
20 2134

39 CFR

20 2855
111 ....36, 2141
3001 ....1392, 4493

40 CFR

9 3026
52 ....413, 415, 754, 756, 926, 992, 1517, 2141, 2573, 2575, 2577, 2581, 3214, 3216, 3425, 3841, 3850, 3852, 3855, 4296
58 ....3028, 3030
63 4298
68 964
81 ....992, 3216, 3855
82 ....1092, 3861, 3865
141 1494
180 ...41, 418, 759, 1132, 3037, 2995, 3003, 3427, 3428, 4301, 4308
185 3044
239 4311
261 3869
262 3381
264 3381
265 3381
272 2144
300 2942
761 3026

Proposed Rules:

51 3890
52 ....67, 464, 465, 818, 820, 1003, 1573, 1770, 2165, 2416, 2455, 2610, 2611, 3263, 3271, 3272, 3465, 3890, 3891, 3896, 3901, 3906, 3908, 4379
58 3056
60 2460
61 2460
63 ....1780, 1880, 2460, 2611, 4379
65 2460
81 ....1003, 3272, 3908
82 3272
97 2416
98 2416
141 ....1499, 2538
180 1157
239 4379
272 2166
300 2950
302 1780
372 688
437 2280
745 2460

41 CFR

101–11 2857
101–42 1139
101–43 1139
300–2 2432
300–3 2432
303–70 2432

42 CFR

409 3647
410 3647
424 3647
484 ....3747, 3764
488 3747

Proposed Rules:

Ch. IV 69
405 3474
409 1784
410 1784
411 1784
412 1784
413 1784
416 1785
419 1784
488 1785
498 1784
1003 1784

43 CFR

Proposed Rules:

4 ....1930, 3262
428 2870
3100 2166
3106 2166
3130 2166
3160 2166

44 CFR

65 ....1521, 3045
67 ....1523, 3046

Proposed rules:

61 3909
67 ....1573, 3056
206 3910

45 CFR

2506 4315

Proposed Rules:

400 1159
401 1159

46 CFR

Proposed Rules:

249 1175
381 4382
401 1585
520 2615

47 CFR

0 2149
1 4054
2 2585
21 4054
25 2585
54 2591
68 3048
73 ....995, 2858, 3650, 3873, 3874, 4322
74 ....4054, 4322
76 2595
90 3048

Proposed Rules:

0 2461
1 1
2 ....1786, 2462
20 3478
25 1786
73 ....2461, 3913
76 2461
90 ....1003, 3480

48 CFR

52 3195
204 2595
208 2595
216 2595
217 2595
219 2595
223 2595
225 ....2595, 2599
237 2595
242 2595
246 2595
247 2595
252 ....2436, 2595, 2599
253 ....2595, 2600
1201 2436
1205 2436
1206 2436
1211 2436
1213 ....2436, 2595
1215 2436
1237 2436
1253 2436
1516 3875
1552 3875
1804 1528
1871 1529
5315 995

Proposed Rules:

Ch. 3 1344
14 4258
15 4258
17 3617
31 3379
52 ....3617, 3785, 4258
204 2617
212 2617

213.....2617
252.....2617
253.....2617
1537.....3060
1552.....3060

49 CFR

1.....2150, 3876
555.....2858
571.....2446
581.....2858
653.....425
654.....425

Proposed Rules:

171.....70, 1789
177.....70
178.....70
180.....70
229.....3273
230.....1791
231.....3273
232.....3273
572.....4385

50 CFR

18.....1529, 4328
23.....769
100.....1276
229.....3431
300.....13
600.....1316, 4030
622.....3624, 3650
630.....4055
648 .....427, 1139, 2600, 2601, 4059
660.....45, 1316
679 .....46, 50, 427, 428, 1539, 3435, 3437, 3446, 3453, 3651, 3653, 3658, 3877

Proposed Rules:

17 .....821, 2167, 3913, 3915, 3923
20.....821, 822
21.....822
227.....465
285.....3153
600.....3153
622.....2620
630.....3153
635.....3153
644.....3153
648 .....471, 823, 2466, 3480, 4065
649.....2708
660 .....823, 1341, 2467, 4065
678.....3153
679.....2870
697.....2708

REMINDERS

The items in this list were editorially compiled as an aid to Federal Register users. Inclusion or exclusion from this list has no legal significance.

RULES GOING INTO EFFECT JANUARY 28, 1999

CORPORATION FOR NATIONAL AND COMMUNITY SERVICE

Federal claims collection; published 1-28-99

ENVIRONMENTAL PROTECTION AGENCY

Pesticides; tolerances in food, animal feeds, and raw agricultural commodities:

Diflufenzopyr; published 1-28-99

INTERIOR DEPARTMENT

Fish and Wildlife Service

Marine mammals:

Incidental taking during specified activities—

Beaufort Sea, AK; year-round oil and gas industry operations; polar bears and Pacific walrus; published 1-28-99

JUSTICE DEPARTMENT

Organization, functions, and authority delegations:

Prisons Bureau Director and Drug Enforcement Administrator; gift acceptance authority withdrawn; published 1-28-99

NATIONAL TRANSPORTATION SAFETY BOARD

Board employee testimony:

Use of Board reports in litigation, etc.; published 12-29-98

Organization, functions, and authority delegations:

Technical amendments; published 12-29-98

TRANSPORTATION DEPARTMENT

Federal Aviation Administration

Class D airspace; published 10-28-98

Class D and Class E airspace; published 11-16-98

Class E airspace; published 9-15-98

Class E airspace; correction; published 12-11-98

IFR altitudes; published 12-22-98

TRANSPORTATION DEPARTMENT

National Highway Traffic Safety Administration

Grants and cooperative agreements; availability, etc.:

Alcohol-impaired driving prevention projects—

Incentive grants; published 12-29-98

TREASURY DEPARTMENT

Internal Revenue Service

Income taxes:

Asset transfers to tax-exempt entities; published 12-29-98

UNITED STATES INFORMATION AGENCY

Freedom of Information Act; implementation; published 12-29-98

COMMENTS DUE NEXT WEEK

AGRICULTURE DEPARTMENT

Agricultural Marketing Service

Federal Seed Act:

Noxious-weed seeds; prohibition of shipment of agricultural and vegetable seeds containing them; comments due by 2-4-99; published 12-24-98

Organization, functions, and authority delegations:

Transfer of regulations under Egg Products Inspection Act to FSIS; comments due by 2-1-99; published 12-31-98

Transfer of regulations under Egg Products Inspection Act to FSIS; correction; comments due by 2-1-99; published 1-21-99

AGRICULTURE DEPARTMENT

Animal and Plant Health Inspection Service

Noxious weed lists:

Update; comments due by 2-2-99; published 12-4-98

AGRICULTURE DEPARTMENT

Food Safety and Inspection Service

Organization, functions, and authority delegations:

Agency responsibilities, organization, terminology and transfer of regulations under Egg Products Inspection Act from AMS; comments due by 2-1-99; published 12-31-98

Transfer of regulations under Egg Products Inspection Act from AMS; correction; comments due by 2-1-99; published 1-21-99

COMMERCE DEPARTMENT

National Oceanic and Atmospheric Administration

Fishery conservation and management:

Alaska fisheries of Exclusive Economic Zone—

Crab and scallop fisheries; maximum sustainable and optimum yield; comments due by 2-1-99; published 12-1-98

Northeastern United States fisheries—

Atlantic sea scallop; comments due by 2-1-99; published 12-1-98

Northeast multispecies; comments due by 2-1-99; published 1-6-99

Northeast multispecies and monkfish; comments due by 2-1-99; published 12-2-98

Northeast multispecies, Atlantic sea scallop, and Atlantic salmon; comments due by 2-1-99; published 12-7-98

West Coast States and Western Pacific fisheries—

Pacific groundfish; comments due by 2-1-99; published 12-1-98

ENERGY DEPARTMENT

Energy Efficiency and Renewable Energy Office

Consumer products; energy conservation program:

Clothes washers, energy conservation standards; comments due by 2-3-99; published 11-19-98

Clothes washers, energy conservation standards; correction; comments due by 2-3-99; published 1-8-99

Energy conservation:

Distribution transformers; test procedures; comments due by 2-5-99; published 11-12-98

ENVIRONMENTAL PROTECTION AGENCY

Air quality implementation plans; approval and promulgation; various States:

California; comments due by 2-1-99; published 12-31-98

Illinois; comments due by 2-5-99; published 1-6-99

Kentucky; comments due by 2-4-99; published 1-5-99

Louisiana; comments due by 2-4-99; published 1-5-99

North Carolina; comments due by 2-1-99; published 12-31-98

Tennessee; comments due by 2-1-99; published 12-31-98

Hazardous waste:

Identification and listing—

Exclusions; comments due by 2-4-99; published 12-21-98

Pesticides; tolerances in food, animal feeds, and raw agricultural commodities:

Cymoxanil; comments due by 2-1-99; published 12-2-98

Imidacloprid; comments due by 2-1-99; published 12-2-98

Pesticides; tolerances in food, animal feeds, and raw agricultural commodities

Metolachlor; comments due by 2-1-99; published 12-2-98

Pesticides; tolerances in food, animal feeds, and raw agricultural commodities:

Myclobutanil; comments due by 2-2-99; published 12-4-98

Primisulfuron-methyl; comments due by 2-1-99; published 12-2-98

Tebuconazole; comments due by 2-1-99; published 12-2-98

Thiabendazole; comments due by 2-2-99; published 12-4-98

Triasulfuron; comments due by 2-1-99; published 12-2-98

FEDERAL COMMUNICATIONS COMMISSION

Common carrier services:

Commercial mobile radio services—

Wireless services compatibility with enhanced 911 services; Automatic Location Identification requirements; waiver guidelines; comments due by 2-4-99; published 1-22-99

Radio stations; table of assignments:

Arkansas; comments due by 2-1-99; published 12-17-98

New Mexico; comments due by 2-1-99; published 12-17-98

North Dakota; comments due by 2-1-99; published 12-17-98

FEDERAL DEPOSIT INSURANCE CORPORATION

Insured State banks and savings associations; activities; comments due by 2-1-99; published 12-1-98

FEDERAL ELECTION COMMISSION

Contribution and expenditure limitations and prohibitions:
Corporate and labor organizations—
Membership association member; definition; comments due by 2-1-99; published 12-16-98
Limited liability companies; treatment; comments due by 2-1-99; published 12-18-98

Presidential primary and general election candidates; public financing:
Eligibility requirements and funding expenditure and repayment procedures; comments due by 2-1-99; published 12-16-98

FEDERAL RESERVE SYSTEM

Availability of funds and collection of checks (Regulation CC):
Software changes related to merger; implementation time; comments due by 2-1-99; published 12-31-98

GENERAL SERVICES ADMINISTRATION

Federal property management:
Telecommunications resources management and use—
Network registration services; user fees; comments due by 2-1-99; published 12-1-98

GOVERNMENT ETHICS OFFICE

Freedom of Information Act; implementation; comments due by 2-1-99; published 12-3-98

HEALTH AND HUMAN SERVICES DEPARTMENT

Food and Drug Administration

Administrative practice and procedure:
Clinical investigators; financial disclosure; comments due by 2-1-99; published 12-31-98

Human drugs and biological products:
Postmarketing adverse drug reactions; electronic reporting; comments due by 2-3-99; published 11-5-98

Human drugs:
Abbreviated new drug applications; approval effective date; comments due by 2-3-99; published 11-5-98
Bioavailability and bioequivalence requirements; abbreviated applications; comments due by 2-2-99; published 11-19-98

Medical devices:
General hospital and personal use devices—
Liquid chemical sterilants and general purpose disinfectants; classification; comments due by 2-4-99; published 11-6-98

INTERIOR DEPARTMENT

Land Management Bureau

Minerals management:
Oil and gas leasing—
Federal oil and gas resources; protection against drainage by operations on nearby lands that would result in lower royalties from Federal leases; comments due by 2-1-99; published 12-3-98

INTERIOR DEPARTMENT

Fish and Wildlife Service

Endangered and threatened species:
Preble's meadow jumping mouse; comments due by 2-1-99; published 12-3-98

INTERIOR DEPARTMENT

National Park Service

National Park System:
Glacier Bay National Park, AK; commercial fishing activities; comments due by 2-1-99; published 1-11-99

INTERIOR DEPARTMENT

Surface Mining Reclamation and Enforcement Office

Permanent program and abandoned mine land reclamation plan submissions:
Kentucky; comments due by 2-5-99; published 1-6-99

JUSTICE DEPARTMENT

Immigration and Naturalization Service

Nonimmigrant classes:
Aliens coming temporarily to U.S. to perform agricultural labor or services; H-2A classification petitions; adjudication delegated to Labor Department; comments due by 2-5-99; published 12-7-98

LABOR DEPARTMENT

Employment and Training Administration

North American Free Trade Agreement (NAFTA):
Nonimmigrants on H-1B visas employed in specialty occupations and as fashion models; labor condition applications and employer requirements; comments due by 2-4-99; published 1-5-99

NATIONAL CREDIT UNION ADMINISTRATION

Credit unions:
Organization and operations—
Directors and senior officers; prior notice of appointment or employment; comments due by 2-3-99; published 11-5-98

NUCLEAR REGULATORY COMMISSION

Byproduct material; domestic licensing:
Generally licensed industrial devices containing byproduct material; comments due by 2-5-99; published 12-31-98

POSTAL RATE COMMISSION

Practice and procedure:
Library reference rule; comments due by 2-1-99; published 12-24-98

SECURITIES AND EXCHANGE COMMISSION

Investment companies:
Deregistration of registered investment companies; electronic filing requirements; comments due by 2-5-99; published 12-16-98

TRANSPORTATION DEPARTMENT

Federal Aviation Administration

Airworthiness directives:
Aerospatiale; comments due by 2-4-99; published 1-5-99
AlliedSignal, Inc.; comments due by 2-1-99; published 12-3-98
Avions Pierre Robin; comments due by 2-5-99; published 12-31-98
Boeing; comments due by 2-1-99; published 12-17-98
British Aerospace; comments due by 2-4-99; published 1-5-99
Industrie Aeronautiche e Meccaniche; comments due by 2-1-99; published 12-30-98
International Aero Engines; comments due by 2-5-99; published 1-6-99
McDonnell Douglas; comments due by 2-1-99; published 12-2-98
MT-Propeller Entwicklung GmbH; comments due by 2-1-99; published 12-1-98
Pilatus Aircraft Ltd.; comments due by 2-1-99; published 12-30-98
Pratt & Whitney; comments due by 2-1-99; published 12-2-98

Class E airspace; comments due by 2-1-99; published 12-16-98

Class E airspace; correction; comments due by 2-4-99; published 1-22-99