2–8–99
Vol. 64 No. 25
Pages 5927–6186

federal register

Monday
February 8, 1999

Briefings on how to use the Federal Register
For information on briefings in Washington, DC, see announcement on the inside cover of this issue.

Now Available Online via
GPO Access

Free online access to the official editions of the *Federal Register, the Code of Federal Regulations* and other Federal Register publications is available on *GPO Access*, a service of the U.S. Government Printing Office at:

http://www.access.gpo.gov/nara/index.html

For additional information on ***GPO Access*** products, services and access methods, see page II or contact the *GPO Access* User Support Team via:

★ Phone: toll-free: 1-888-293-6498

★ Email: gpoaccess@gpo.gov

Attention: Federal Agencies

Plain Language Tools Are Now Available

The Office of the Federal Register offers Plain Language Tools on its Website to help you comply with the President's Memorandum of June 1, 1998—Plain Language in Government Writing (63 FR 31883, June 10, 1998). Our address is: http://www.nara.gov/fedreg

For more in-depth guidance on the elements of plain language, read ''Writing User-Friendly Documents'' on the National Partnership for Reinventing Government (NPR) Website at: http://www.plainlanguage.gov

The **FEDERAL REGISTER** is published daily, Monday through Friday, except official holidays, by the Office of the Federal Register, National Archives and Records Administration, Washington, DC 20408, under the Federal Register Act (44 U.S.C. Ch. 15) and the regulations of the Administrative Committee of the Federal Register (1 CFR Ch. I). The Superintendent of Documents, U.S. Government Printing Office, Washington, DC 20402 is the exclusive distributor of the official edition.

The **Federal Register** provides a uniform system for making available to the public regulations and legal notices issued by Federal agencies. These include Presidential proclamations and Executive Orders, Federal agency documents having general applicability and legal effect, documents required to be published by act of Congress, and other Federal agency documents of public interest.

Documents are on file for public inspection in the Office of the Federal Register the day before they are published, unless the issuing agency requests earlier filing. For a list of documents currently on file for public inspection, see http://www.nara.gov/fedreg.

The seal of the National Archives and Records Administration authenticates the Federal Register as the official serial publication established under the Federal Register Act. Under 44 U.S.C. 1507, the contents of the **Federal Register** shall be judicially noticed.

The **Federal Register** is published in paper and on 24x microfiche. It is also available online at no charge as one of the databases on GPO Access, a service of the U.S. Government Printing Office.

The online edition of the **Federal Register** is issued under the authority of the Administrative Committee of the Federal Register as the official legal equivalent of the paper and microfiche editions (44 U.S.C. 4101 and 1 CFR 5.10). It is updated by 6 a.m. each day the **Federal Register** is published and it includes both text and graphics from Volume 59, Number 1 (January 2, 1994) forward.

GPO Access users can choose to retrieve online **Federal Register** documents as TEXT (ASCII text, graphics omitted), PDF (Adobe Portable Document Format, including full text and all graphics), or SUMMARY (abbreviated text) files. Users should carefully check retrieved material to ensure that documents were properly downloaded.

On the World Wide Web, connect to the **Federal Register** at http://www.access.gpo.gov/nara. Those without World Wide Web access can also connect with a local WAIS client, by Telnet to swais.access.gpo.gov, or by dialing (202) 512-1661 with a computer and modem. When using Telnet or modem, type swais, then log in as guest with no password.

For more information about GPO Access, contact the GPO Access User Support Team by E-mail at gpoaccess@gpo.gov; by fax at (202) 512–1262; or call (202) 512–1530 or 1–888–293–6498 (toll free) between 7 a.m. and 5 p.m. Eastern time, Monday–Friday, except Federal holidays.

The annual subscription price for the **Federal Register** paper edition is $555, or $607 for a combined **Federal Register,** Federal Register Index and List of CFR Sections Affected (LSA) subscription; the microfiche edition of the **Federal Register** including the Federal Register Index and LSA is $220. Six month subscriptions are available for one-half the annual rate. The charge for individual copies in paper form is $8.00 for each issue, or $8.00 for each group of pages as actually bound; or $1.50 for each issue in microfiche form. All prices include regular domestic postage and handling. International customers please add 25% for foreign handling. Remit check or money order, made payable to the Superintendent of Documents, or charge to your GPO Deposit Account, VISA, MasterCard or Discover. Mail to: New Orders, Superintendent of Documents, P.O. Box 371954, Pittsburgh, PA 15250–7954.

There are no restrictions on the republication of material appearing in the **Federal Register.**

How To Cite This Publication: Use the volume number and the page number. Example: 64 FR 12345.

Printed on recycled paper.

SUBSCRIPTIONS AND COPIES

PUBLIC	
Subscriptions:	
Paper or fiche	**202–512–1800**
Assistance with public subscriptions	**512–1806**
General online information	**202–512–1530; 1–888–293–6498**
Single copies/back copies:	
Paper or fiche	**512–1800**
Assistance with public single copies	**512–1803**
FEDERAL AGENCIES	
Subscriptions:	
Paper or fiche	**523–5243**
Assistance with Federal agency subscriptions	**523–5243**

NOW AVAILABLE ONLINE

The October 1998 Office of the Federal Register Document Drafting Handbook

Free, easy online access to the newly revised October 1998 Office of the Federal Register Document Drafting Handbook (DDH) is now available at:

http://www.nara.gov/fedreg/draftres.html

This handbook helps Federal agencies to prepare documents for publication in the **Federal Register.**

For additional information on access, contact the Office of the Federal Register's Technical Support Staff.

Phone: 202–523–3447

E-mail: info@fedreg.nara.gov

FEDERAL REGISTER WORKSHOP

THE FEDERAL REGISTER: WHAT IT IS AND HOW TO USE IT

FOR: Any person who uses the Federal Register and Code of Federal Regulations.

WHO: Sponsored by the Office of the Federal Register.

WHAT: Free public briefings (approximately 3 hours) to present:

1. The regulatory process, with a focus on the Federal Register system and the public's role in the development regulations.
2. The relationship between the Federal Register and Code of Federal Regulations.
3. The important elements of typical Federal Register documents.
4. An introduction to the finding aids of the FR/CFR system.

WHY: To provide the public with access to information necessary to research Federal agency regulations which directly affect them. There will be no discussion of specific agency regulations.

WASHINGTON, DC

WHEN: February 23, 1999 at 9:00 am.

WHERE: Office of the Federal Register
Conference Room
800 North Capitol Street, NW.
Washington, DC
(3 blocks north of Union Station Metro)

RESERVATIONS: 202–523–4538

Contents

Federal Register

Vol. 64, No. 25

Monday, February 8, 1999

Agricultural Marketing Service
NOTICES
Agency information collection activities:
Proposed collection; comment request, 6033–6034

Agriculture Department
See Agricultural Marketing Service
See Animal and Plant Health Inspection Service
See Forest Service

Animal and Plant Health Inspection Service
NOTICES
Environmental statements; availability, etc.:
Florida Medfly eradication program; risk reduction, 6034

Army Department
NOTICES
Environmental statements; availability, etc.:
Fort Benning and Columbus, GA; land exchange, 6060–6061
Grants and cooperative agreements; availability, etc.:
Composite Analysis Software Tools technology development and commercialization, 6061

Centers for Disease Control and Prevention
NOTICES
Grants and cooperative agreements; availability, etc.:
Childhood lead poisoning prevention and blood lead surveillance; State and local programs, 6093–6099
Meetings:
Injury Research Grant Review Committee, 6099

Children and Families Administration
RULES
Head Start Program:
Authorization of use of grant funds to purchase facilities in which to operate programs, 5939–5949
PROPOSED RULES
Head Start Program:
Authorization of use of grant funds to finance construction and major renovation of facilities, 6013–6020
NOTICES
Grants and cooperative agreements; availability, etc.:
Child welfare demonstration projects, 6099–6100

Civil Rights Commission
NOTICES
Meetings; State advisory committees:
New Jersey, 6037–6038
Ohio, 6038
Rhode Island, 6038

Coast Guard
RULES
Ports and waterways safety:
Kennebec River, Bath, ME; safety zone, 5935–5936
PROPOSED RULES
Ports and waterways safety:
Atlantic Ocean adjacent to Cape Henlopen State Park, DE; safety zone, 6006–6008
NOTICES
Environmental statements; availability, etc.:
National Distress System Modernization Project, 6130–6131

Commerce Department
See Export Administration Bureau
See International Trade Administration
See National Oceanic and Atmospheric Administration
See Technology Administration

Committee for the Implementation of Textile Agreements
NOTICES
Cotton, wool, and man-made textiles:
Cambodia, 6050–6051
El Salvador, 6051–6052

Consumer Product Safety Commission
NOTICES
Meetings:
Recall effectiveness; identification of purchasers of certain products; public forum, 6052

Defense Department
See Army Department
NOTICES
Federal Acquisition Regulation (FAR):
Agency information collection activities—
Proposed collection; comment request, 6052–6056
Submission for OMB review; comment request, 6057–6060

Education Department
NOTICES
Agency information collection activities:
Submission for OMB review; comment request, 6062
Grants and cooperative agreements; availability, etc.:
Postsecondary education—
Distance Education Demonstration Program, 6062–6063
Teacher Quality Enhancement Programs, 6139–6147
Strengthening Institutions Program et al., 6177–6178

Energy Department
See Federal Energy Regulatory Commission

Environmental Protection Agency
RULES
Air quality implementation plans; approval and promulgation; various States:
Minnesota, 5936–5939
PROPOSED RULES
Air pollution control; new motor vehicles and engines:
New nonroad spark-ignition engines rated above 19 kilowatts and new land-based recreational spark-ignition engines, 6008–6013
Air quality implementation plans; approval and promulgation; various States:
Minnesota, 6008
NOTICES
Meetings:
Drinking water and wastewater programs; gap analysis; local-level funding needs, 6072

Gulf of Mexico Program Management Committee, 6072–6073
Lead-based paint hazards; renovation and remodeling activities; round table discussion, 6073–6074
Superfund; response and remedial actions, proposed settlements etc.:
Caldwell Systems, Inc., Site, NC, 6077–6078
Superfund program:
Emergency Planning and Community Right-to-Know Act—
Toxic release inventory reporting requirements; workshops, 6074–6076
Water pollution control:
Clean Water Act—
Class II administrative penalty assessments, 6078

Executive Office of the President
See Presidential Documents

Export Administration Bureau
RULES
Export licensing:
Commerce control list—
Missile technology controls changes, 5931–5935

Federal Aviation Administration
RULES
Airworthiness standards:
Transport category airplanes—
High-lift device controls; gate requirements, 6159–6164
Class D airspace, 5930–5931
Class E airspace; correction, 6138
PROPOSED RULES
Airworthiness directives:
Avions Pierre Robin, 5985–5987
NOTICES
Environmental statements; notice of intent:
Grand Canyon National Park, AZ; Special Flight Rules Area, 6131–6132

Federal Communications Commission
RULES
Common carrier services:
Satellite communications—
Fixed-satellite and wireless services and government operations; spectrum allocations; correction, 6138
Organization, functions, and authority delegations:
General Counsel Office, Competition Division elimination; etc., 5950
Television broadcasting:
Cable Television Consumer Protection and Competition Act of 1992—
Direct broadcast satellite public interest obligations; political programming requirements, 5951–5957
Cable television systems—
Emergency alert system; broadcast channel overrides; termination, 5950–5951
PROPOSED RULES
Radio stations; table of assignments:
Wisconsin, 6020–6021
NOTICES
Agency information collection activities:
Reporting and recordkeeping requirements, 6078–6082

Federal Deposit Insurance Corporation
NOTICES
Agency information collection activities:
Proposed collection; comment request, 6082

Federal Emergency Management Agency
NOTICES
Disaster and emergency areas:
Alabama, 6082–6083
Arkansas, 6083
Illinois, 6083–6084
Indiana, 6084
Louisiana, 6084–6085
Maine, 6085
Michigan, 6085–6086
Mississippi, 6086
New York, 6086–6087
Tennessee, 6087–6088

Federal Energy Regulatory Commission
NOTICES
Electric rate and corporate regulation filings:
Eagle Gas Marketing Co. et al., 6067–6069
Indeck-Pepperell Power Associates, Inc., et al., 6069–6071
Meetings; Sunshine Act, 6071–6072
Applications, hearings, determinations, etc.:
ANR Pipeline Co., 6063–6064
Atlantic City Electric Co. et al., 6064
Colorado Interstate Gas Co., 6064
Duke Energy Trading & Marketing, L.L.C., 6064
El Paso Natural Gas Co., 6064–6065
Koch Gateway Pipeline Co., 6065
Maine Public Service Co. et al., 6065
Mississippi River Transmission Corp., 6065
NorAm Gas Transmission Co., 6066
Northwest Pipeline Corp., 6066
Transcontinental Gas Pipe Line Corp., 6066–6067
Viking Gas Transmission Co., 6067

Federal Highway Administration
PROPOSED RULES
Payment procedures:
Surface transportation projects; credit assistance, 5996–6005

Federal Housing Finance Board
RULES
Freedom of Information Act; implementation, 5929–5930

Federal Railroad Administration
PROPOSED RULES
Payment procedures:
Surface transportation projects; credit assistance, 5996–6005

Federal Reserve System
NOTICES
Banks and bank holding companies:
Formations, acquisitions, and mergers, 6088–6089
Formations, acquisitions, and mergers; correction, 6088
Permissible nonbanking activities, 6089

Federal Transit Administration
PROPOSED RULES
Payment procedures:
Surface transportation projects; credit assistance, 5996–6005
NOTICES
Grants and cooperative agreements; availability, etc.:
Over-the-road Bus Accessibility Program, 6165–6176

Fish and Wildlife Service
RULES
Endangered and threatened species:
Coastal California gnatcatcher; critical habitat designation, 5957–5963
Sacramento splittail, 5963–5981
NOTICES
Endangered and threatened species permit applications, 6112

Food and Drug Administration
PROPOSED RULES
Medical devices:
Gastroenterology and urology devices—
Extracorporeal shock wave lithotripter; reclassification, 5987–5996
NOTICES
Food additive petitions:
Monsanto Co., 6100
Meetings:
Endocrinologic and Metabolic Drugs Advisory Committee, 6100
Reports and guidance documents; availability, etc.:
Extracorporeal shock wave lithotripters for fragmentation of kidney and ureteral calculi; premarket notifications (510(k)'s), content, 6100–6101

Forest Service
NOTICES
Environmental statements; notice of intent:
Allegheny National Forest, PA, 6034–6037

General Services Administration
NOTICES
Environmental statements; availability, etc.:
Governors Island, New York Harbor, New York, NY; disposal, 6089–6092
Federal Acquisition Regulation (FAR):
Agency information collection activities—
Proposed collection; comment request, 6052–6056
Submission for OMB review; comment request, 6057–6059

Health and Human Services Department
See Centers for Disease Control and Prevention
See Children and Families Administration
See Food and Drug Administration
See Health Care Financing Administration
See National Institutes of Health
See Public Health Service
NOTICES
Organization, functions, and authority delegations:
Program Support Center, 6092–6093

Health Care Financing Administration
NOTICES
Grants and cooperative agreements; availability, etc.:
State Children's Health Insurance Program, 6102–6108

Housing and Urban Development Department
PROPOSED RULES
Public and Indian housing:
Public housing agencies; operating fund rule; negotiated rulemaking committee; intent to establish and meeting—
Correction, 6138

Indian Affairs Bureau
NOTICES
Tribal-State Compacts approval; Class III (casino) gambling:
Omaha Tribe of Nebraska, IA, 6112

Interior Department
See Fish and Wildlife Service
See Indian Affairs Bureau
See Land Management Bureau
See National Park Service
See Reclamation Bureau
See Surface Mining Reclamation and Enforcement Office

International Trade Administration
NOTICES
Antidumping:
Antifriction bearings (other than tapered roller bearings) and parts from—
France et al., 6038
Brass sheet and strip from—
Canada, 6039–6042
Polyvinyl alcohol from—
Taiwan, 6042–6046
Welded carbon steel pipes and tubes from—
India, 6046–6048

Land Management Bureau
NOTICES
Environmental statements; availability, etc.:
Summo USA Corp., San Juan County, UT; Lisbon Valley open pit copper mine, 6112–6113
Meetings:
Resource Advisory Councils—
Southwest, 6113
Science Advisory Board, 6113–6114
Realty actions; sales, leases, etc.:
New Mexico, 6114–6115

National Aeronautics and Space Administration
NOTICES
Federal Acquisition Regulation (FAR):
Agency information collection activities—
Proposed collection; comment request, 6052–6056
Submission for OMB review; comment request, 6057–6060
Patent licenses; non-exclusive, exclusive, or partially exclusive:
GeoTech Chemical Co., Inc., 6116

National Credit Union Administration
RULES
Credit unions:
Loan interest rates, 5927–5929

National Highway Traffic Safety Administration
PROPOSED RULES
American Automobile Labeling Act; implementation:
Motor vehicle content labeling; domestic and foreign parts content information, 6021–6025
Motor vehicle safety standards:
Lamps, reflective devices, and associated equipment—
Headlighting, 6021
NOTICES
Agency information collection activities:
Proposed collection; comment request, 6132–6133

National Institutes of Health
NOTICES
Meetings:
National Institute of Environmental Health Sciences, 6110
National Institute of Neurological Disorders and Stroke, 6110
National Institute on Drug Abuse, 6110–6111
Scientific Review Center, 6109–6110

National Oceanic and Atmospheric Administration
PROPOSED RULES
Fishery conservation and management:
Alaska; fisheries of Exclusive Economic Zone—
Western Alaska community development quota program, 6025–6032
NOTICES
Meetings:
New England Fishery Management Council, 6048–6049
Western Pacific Fishery Management Council, 6049

National Park Service
NOTICES
Environmental statements; notice of intent:
Denali National Park and Preserve, AK, 6115
Meetings:
Denali National Park Subsistence Resource Commission, 6115

National Science Foundation
NOTICES
Meetings:
Bioengineering and Environmental Systems Special Emphasis Panel, 6116
Design, Manufacture, and Industrial Innovation Special Emphasis Panel, 6116–6117
Human Resource Development Special Emphasis Panel, 6117
Materials Research Special Emphasis Panel, 6117
Physics Special Emphasis Panel, 6117–6118
Physiology and Ethology Advisory Panel, 6118
Systematic and Population Biology Advisory Panel, 6118

Nuclear Regulatory Commission
NOTICES
Applications, hearings, determinations, etc.:
South Carolina Electric & Gas Co., 6118
Southern Nuclear Operating Co., Inc., et al., 6118–6119
Wolf Creek Nuclear Operating Corp., 6119

Presidential Documents
PROCLAMATIONS
Special observances:
American Heart Month (Proc. 7166), 6179–6182
EXECUTIVE ORDERS
Invasive Species (EO 13112), 6183–6186

Public Health Service
See Centers for Disease Control and Prevention
See Food and Drug Administration
See National Institutes of Health
NOTICES
Meetings:
National Toxicology Program—
Alternative Toxicological Methods Advisory Committee, 6111–6112

Reclamation Bureau
NOTICES
Meetings:
Glen Canyon Technical Work Group, 6116

Securities and Exchange Commission
NOTICES
Agency information collection activities:
Proposed collection; comment request, 6119–6120
Applications, hearings, determinations, etc.:
Gradison Growth Trust et al., 6120–6122
Horace Mann Mutual Funds et al., 6122–6124
Public utility holding company filings, 6124–6129

Selective Service System
NOTICES
Agency information collection activities:
Submission for OMB review; comment request, 6129–6130

Small Business Administration
NOTICES
Organization, functions, and authority delegations:
District office name changes, 6130

Surface Mining Reclamation and Enforcement Office
PROPOSED RULES
Permanent program and abandoned mine land reclamation plan submissions:
Indiana, 6149–6157
Ohio, 6005–6006

Surface Transportation Board
NOTICES
Railroad operation, acquisition, construction, etc.:
Albany Bridge Co., Inc., et al., 6133

Technology Administration
NOTICES
Committees; establishment, renewal, termination, etc.:
United States-China Science and Technology Commission; Civil Industrial Technology Coordinating Committee, 6050
United States-Greek Initiative for Technology Cooperation with Balkans, et al.; Joint Science and Technology Cooperation Council, et al., 6050

Tennessee Valley Authority
NOTICES
Environmental statements; notice of intent:
LSP Energy L.P.; option purchase agreement for supply of electric energy; termination, 6130

Textile Agreements Implementation Committee
See Committee for the Implementation of Textile Agreements

Thrift Supervision Office
PROPOSED RULES
Regulated activities:
Exempt savings and loan holding companies and grandfathered activities, 5982–5985

Transportation Department
See Coast Guard
See Federal Aviation Administration
See Federal Highway Administration
See Federal Railroad Administration

See Federal Transit Administration
See National Highway Traffic Safety Administration
See Surface Transportation Board
NOTICES
Aviation proceedings:
Hearings, etc.—
Sun Jet International, Inc., 6130

Treasury Department
See Thrift Supervision Office
NOTICES
Organization, functions, and authority delegations:
Commissioner, Customs Service, 6133–6134
Commissioner, Internal Revenue Service, 6134–6135
Deputy Secretary et al., 6135–6137

Separate Parts In This Issue

Part II
Department of Education, 6139–6147

Part III
Department of the Interior, Surface Mining Reclamation and Enforcement Office, 6149–6157

Part IV
Department of Transportation, Federal Aviation Administration, 6159–6164

Part V
Department of Transportation, Federal Transit Administration, 6165–6176

Part VI
Department of Education, 6177–6178

Part VII
The President, 6179––6186

Reader Aids
Consult the Reader Aids section at the end of this issue for phone numbers, online resources, finding aids, reminders, and notice of recently enacted public laws.

CFR PARTS AFFECTED IN THIS ISSUE

A cumulative list of the parts affected this month can be found in the Reader Aids section at the end of this issue.

3 CFR

Proclamations:
7166 6180

Executive Orders:
11987 (Revoked by EO 13112) 6183
13112 6183

12 CFR
701 5927
904 5929

Proposed Rules:
584 5982

14 CFR
25 6160
71 (2 documents) 5930, 6138

Proposed Rules:
39 5985

15 CFR
772 5931
774 5931

21 CFR

Proposed Rules:
876 5987

23 CFR

Proposed Rules:
180 5996

24 CFR

Proposed Rules:
990 6138

30 CFR

Proposed Rules:
914 6150
935 6005

33 CFR
165 5935

Proposed Rules:
165 6006

40 CFR
52 5936

Proposed Rules:
52 6008
83 6008

45 CFR
1309 5939

Proposed Rules:
1309 6013

47 CFR
0 5950
2 6138
11 5950
76 5950
100 5951

Proposed Rules:
73 6020

49 CFR

Proposed Rules:
261 5996
571 6021
583 6021
640 5996

50 CFR
17 (2 documents) 5957, 5963

Proposed Rules:
679 6025

Rules and Regulations

Federal Register
Vol. 64, No. 25
Monday, February 8, 1999

This section of the FEDERAL REGISTER contains regulatory documents having general applicability and legal effect, most of which are keyed to and codified in the Code of Federal Regulations, which is published under 50 titles pursuant to 44 U.S.C. 1510.

The Code of Federal Regulations is sold by the Superintendent of Documents. Prices of new books are listed in the first FEDERAL REGISTER issue of each week.

NATIONAL CREDIT UNION ADMINISTRATION

12 CFR Part 701

Loan Interest Rates

AGENCY: National Credit Union Administration (NCUA).

ACTION: Final rule.

SUMMARY: The current 18 percent per year federal credit union loan rate ceiling is scheduled to revert to 15 percent on March 9, 1999, unless otherwise provided by the NCUA Board (Board). A 15 percent ceiling would restrict certain categories of credit and adversely affect the financial condition of a number of federal credit unions. At the same time, prevailing market rates and economic conditions do not justify a rate higher than the current 18 percent ceiling. Accordingly, the Board hereby continues an 18 percent federal credit union loan rate ceiling for the period from March 9, 1999 through September 8, 2000. Loans and lines of credit balances existing prior to May 18, 1987 may continue to bear their contractual rate of interest, not to exceed 21 percent. The Board is prepared to reconsider the 18 percent ceiling at any time should changes in economic conditions warrant.

EFFECTIVE DATE: March 9, 1999.

ADDRESSES: National Credit Union Administration, 1775 Duke Street, Alexandria, Virginia, 22314–3428.

FOR FURTHER INFORMATION CONTACT: Dan Gordon, Senior Investment Officer, Office of Investment Services, at the above address or telephone: (703) 518–6620.

SUPPLEMENTARY INFORMATION:

Background

Public Law 96–221, enacted in 1979, raised the loan interest rate ceiling for federal credit unions from 1 percent per month (12 percent per year) to 15 percent per year. It also authorized the Board to set a higher limit, after consulting with the Congress, the Department of Treasury and other federal financial agencies, for a period not to exceed 18 months, if the Board determined that: (1) money market interest rates have risen over the preceding 6 months; and (2) prevailing interest rate levels threaten the safety and soundness of individual credit unions as evidenced by adverse trends in growth, liquidity, capital, and earnings.

On December 3, 1980, the Board determined that the foregoing conditions had been met. Accordingly, the Board raised the loan ceiling for 9 months to 21 percent in the unstable environment of the first-half of the 1980s. The Board lowered the loan rate ceiling form 21 percent to 18 percent effective May 18, 1987. This action was taken in an environment of falling market interest rates from 1980 to early 1987. The ceiling has remained at 18 percent to the present.

The Board believes that the 18 percent ceiling will permit credit unions to continue to meet their current lending programs, permit flexibility so that credit unions can react to any adverse economic developments, and ensure that any increase in the cost of funds would not affect the safety and soundness of federal credit unions.

The Board would prefer not to set loan interest rate ceilings for federal credit unions. Credit unions are cooperatives that balance loan and share rates consistent with the needs of their members and prevailing market interest rates.

The Board supports free lending markets and the ability of federal credit unions boards of directors to establish loan rates that reflect current market conditions and the interests of their members. Congress has, however, imposed loan rate ceilings since 1934. In 1979, Congress set the ceiling at 15 percent but authorized the Board to set a ceiling in excess of 15 percent, if conditions warrant.

The following analysis justifies a ceiling above 15 percent, but at the same time does not support a ceiling above the current 18 percent. The Board is prepared to reconsider this actions at any time should changes in economic conditions warrant.

Money Market Interest Rates

Interest rates and the expectations about the future level of economic activity have recently been dominated by concerns in worldwide financial markets. The downfall of many Asian economies and the unprecedented recession in Japan required the Federal Reserve, as the central bank most capable of preventing a world-wide economic downturn, to substantially lower interest rates in early October of last year. There are now indications that the actions taken at that time had the intended effect. Several of the Asian economics have recently shown signs of recovery and Japan, recognizing its vulnerability, has undertaken a massive fiscal stimulus package.

The result is that inflation fears in the United States, which only recently were overshadowed by the Asian economic crisis, are reemerging. With the economy still growing in excess of 3.5 percent per annum, and recovery now underway in foreign economies, there are concerns that conditions exist for further inflationary pressures. The recent credit squeeze in financial markets, reflected by tighter bank credit standards and wider credit spreads, has reduced capital expenditures, and thus future productivity gains. Yet the strong productivity gains were a primary factor preventing price increase in the last few years.

The potential scarcity of capital, the prospective improvement in the world economies, and the expectation that oil prices could recover from their now 12-year lows and commodity prices from their 22-year lows will increase inflationary expectations. In addition, strong consumer confidence, a strong housing market and continued expansion in consumer spending will continue to put pressure on the economy. With unemployment remaining in the 4.5 percent range, and the continued strong demand for workers, wage pressures will increase. In addition, as less skilled workers are employed and firms are required to use more scarce resources, the pressures on costs, and thus on prices, will intensify. The result may well be further increases in interest rates.

Reinforcing the expectation of higher rates, the Federal Reserve has strongly suggested it will not lower rates again in the near term. The result has been an expectation in financial markets that

interest rates could rise above current levels. Already there have been substantial increases in yields since lows reached in early October. For example, on October 1, 1998, the rate on the 6-month Treasury was 4.36 percent, and on January 5, 1999, it was 4.54 percent. The 5-year Treasury rate was 4.55 percent on January 4, 1999. This was 48 basis points above the rate on October 1, 1998, while the 10-year Treasury rate increased 39 basis points in the same interval. Therefore, although the current rates are below the rates of six months ago, there is every indication that by March 9, 1999, rates will be higher than they were on October 1.

TABLE 1.—TREASURY RATES

Maturity	Yields as of October 1, 1998 (percent)	Yields as of January 4, 1999 (percent)	Change in basis points
3-month	4.22	4.67	25
6-month	4.36	4.54	18
1-year	4.27	4.57	30
2-year	4.15	4.56	41
5-year	4.07	4.55	48
10-year	4.29	4.67	38
30-year	4.88	5.15	27

The fact that long-term rates exceed short-term rates (for example, the 30-year rate is 61 basis points above the 6-month rate) is more evidence that the market expects rates to rise in the months ahead. Investors are unwilling to hold longer term investments unless they are compensated for these potentially higher future rates.

Further declines in the unemployment rate, rising consumer confidence, continued income growth and a strong equity market have led many to be concerned that consumer demand may rise at a faster pace in the months ahead. We need to be aware of these potential inflationary pressures which could result in higher interest rates. Therefore, it is important to maintain the 18 percent ceiling. Lowering the interest rate ceiling at this time could cause an unnecessary burden on credit unions.

Financial Implications for Credit Unions

For at least 873 credit unions, representing 28 percent [1] of the reporting federal credit unions, the most common rate on unsecured loans was above 15 percent. While the bulk of credit union lending is below 15 percent, small credit unions and credit unions that have instituted risk-based lending programs require interest rates above 15 percent to maintain liquidity, capital, earnings, and growth. Loans to members who have not yet established a credit history or have weak credit histories have more credit risk. Credit unions must charge rates to cover the potential of higher than usual losses for such loans. There are undoubtedly more than 873 credit unions charging over 15 percent for unsecured loans to such members. Many credit unions have ''Credit Builder'' or ''Credit Rebuilder'' loans but only report the ''most common'' rate on the Call Report for unsecured loans. Lowering the interest rate ceiling for credit unions would discourage credit unions from making these loans. Credit seekers' options would be reduced and most of the affected members would have no alternative but to turn to other lenders who will charge much higher rates.

Small credit unions would be particularly affected by a lower loan ceiling since they tend to have a higher level of unsecured loans, typically with lower loan balances. Thus, small credit unions making small loans to members with poor or no credit histories are struggling with far higher costs than the typical credit union. Both young people and lower income households have limited access to credit and, absent a credit union, often pay rates of 24 to 30 percent to other lenders. Rates between 15 and 18 percent are attractive to such members.

Table 2 shows the number of credit unions in each asset group where the most common rate is more than 15 percent for unsecured loans.

TABLE 2.—FEDERAL CREDIT UNIONS WITH MOST COMMON UNSECURED LOAN RATES GREATER THAN 15 PERCENT

[June 1998]

Peer group by asset size	Total all FCUs	Number FCUs w/ loan rates >15%
$0–2 mil	1,940	214
$2–10 mil	2,390	334

TABLE 2.—FEDERAL CREDIT UNIONS WITH MOST COMMON UNSECURED LOAN RATES GREATER THAN 15 PERCENT—Continued

[June 1998]

Peer group by asset size	Total all FCUs	Number FCUs w/ loan rates >15%
$10–50 mil	1,735	214
$50 mil+	842	111
Total [1]	6,907	873

[1] Of this total, 4,083 had either a zero balance or did not report rate balances 15 percent and above.

Among the 871 credit unions where the most common rate is more than 15 percent for unsecured loans, 242 have 20 percent or more of their assets (Table 3) in this category. For these credit unions, lowering the rates would damage their liquidity, capital, earnings, and growth.

TABLE 3.—FEDERAL CREDIT UNIONS WITH MOST COMMON UNSECURED LOAN RATES GREATER THAN 15 PERCENT AND MORE THAN 20 PERCENT OF ASSETS IN UNSECURED LOANS

[June 1998]

Peer group by asset size	Avg. percentage of loan rates >15% to assets	Number FCUs meeting both criteria
$0–2 mil	38.31	95
$2–10 mil	28.46	61
$10–50 mil	25.62	22
$50 mil+	23.34	7

[1] Of the 6,907 FCUs, 4,083 had zero balances in the 15 percent and above category or did not report a balance for the June 1998 reporting period.

TABLE 3.—FEDERAL CREDIT UNIONS WITH MOST COMMON UNSECURED LOAN RATES GREATER THAN 15 PERCENT AND MORE THAN 20 PERCENT OF ASSETS IN UNSECURED LOANS—Continued

[June 1998]

Peer group by asset size	Avg. percentage of loan rates >15% to assets	Number FCUs meeting both criteria
Total	32.99	185

In conclusion, the Board has continued the federal credit union loan interest rate ceiling of 18 percent per year for the period from March 9, 1999, through September 9, 2000. Loans and line of credit balances existing on May 16, 1987 may continue to bear interest at their contractual rate, not to exceed 21 percent. Finally, the Board is prepared to reconsider the 18 percent ceiling at any time during the extension period, should changes in economic conditions warrant.

Regulatory Procedures

Administrative Procedure Act

The Board has determined that notice and public comment on this rule are impractical and not in the public interest. 5 U.S.C. 553(b)(3)(B). Due to the need for a planning period prior to the March 9, 1999, expiration date of the current rule, and the threat to the safety and soundness of individual credit unions with insufficient flexibility to determine loan rates, final action of the loan rate ceiling is necessary.

Regulatory Flexibility Act

For the same reasons, a regulatory flexibility analysis is not required. 5 U.S.C. 604(a). However, the Board has considered the need for this rule, and the alternatives, as set forth above.

Paperwork Reduction Act

There are no paperwork requirements.

Executive Order 12612

This final rule does not affect state regulation of credit unions. It implements provisions of the Federal Credit Union Act applying only to federal credit unions.

List of Subjects in 12 CFR Part 701

Credit, Credit unions, Loan interest rates.

By the National Credit Union Administration Board on January 28, 1999.

Becky Baker,

Secretary of the Board.

Accordingly, NCUA amends 12 CFR ch. VII as follows:

PART 701—ORGANIZATION AND OPERATION OF FEDERAL CREDIT UNIONS

1. The authority citation for part 701 continues to read as follows:

Authority: 12 U.S.C. 1752(5), 1755, 1756, 1757, 1759, 1761a, 1761b, 1766, 1767, 1782, 1784, 1787, and 1789. Section 701.6 is also authorized by 15 U.S.C. 3717. Section 701.31 is also authorized by 15 U.S.C. 1601 *et seq.*; 42 U.S.C. 1981 and 3601–3610. Section 701.35 is also authorized by 42 U.S.C. 4311–4312.

2. Section 701.21(c)(7)(ii)(C) is revised to read as follows:

§ 701.21 Loans to members and lines of credit to members.

* * * * *

(c) * * *

(7) * * *

(ii) * * *

(C) *Expiration.* After September 9, 2000, or as otherwise ordered by the NCUA Board, the maximum rate on federal credit union extensions of credit to members shall revert to 15 percent per year. Higher rates may, however, be charged, in accordance with paragraph (c)(7)(ii)(A) and (B) of this section, on loans and line of credit balances existing on or before May 16, 1987.

* * * * *

[FR Doc. 99–2843 Filed 2–5–99; 8:45 am]

BILLING CODE 7535–01–U

FEDERAL HOUSING FINANCE BOARD

12 CFR Part 904

[No. 99–7]

RIN 3069–AA71

Revisions to the Freedom of Information Act Regulation

AGENCY: Federal Housing Finance Board.

ACTION: Final rule.

SUMMARY: The Federal Housing Finance Board (Finance Board) is adopting the interim final rule that revised its Freedom of Information Act (FOIA) regulation to comply with new statutory requirements and to clarify the Finance Board's practices and procedures in responding to requests for information as a final rule with one minor procedural change. The change makes clear that the Office of Resource Management is the agency component responsible for collecting FOIA fees.

EFFECTIVE DATE: The final rule will become effective on March 10, 1999.

FOR FURTHER INFORMATION CONTACT: Elaine L. Baker, Secretary to the Board and Associate Director, Executive Secretariat, Office of the Managing Director, by telephone at 202/408–2837 or by electronic mail at bakere@fhfb.gov, or Janice A. Kaye, Attorney-Advisor, Office of General Counsel, by telephone at 202/408–2505 or by electronic mail at kayej@fhfb.gov, Federal Housing Finance Board, 1777 F Street, N.W., Washington, D.C. 20006.

SUPPLEMENTARY INFORMATION:

I. Statutory and Regulatory Background

Congress amended the FOIA by enacting the Electronic Freedom of Information Act Amendments of 1996 (EFOIA). *See* 5 U.S.C. 552, *as amended by* Pub. L. 104–231, 110 Stat. 3048 (Oct. 2, 1996). Among other procedural changes, the EFOIA increases the time for responding to a FOIA request from 10 to 20 days, specifically applies the FOIA disclosure requirements to electronic records, and adds frequently requested records as a category of reading room records. The EFOIA also requires an agency to promulgate regulations that provide for the expedited processing of FOIA requests.

In July 1998, the Finance Board published an interim final rule with request for comments that amended its FOIA regulation to comply with these statutory changes. *See* 63 FR 37483 (July 13, 1998), *codified at* 12 CFR part 904. The interim final rule also reorganized and streamlined the FOIA regulation to clarify the Finance Board's practices and procedures in responding to requests for information. The 60-day public comment period closed on September 11, 1998. *See id.*

II. Analysis of Public Comments and the Final Rule

The Finance Board received no comments in response to the interim final rule. Thus, for the reasons set forth in detail in the interim final rulemaking, the Finance Board is adopting the interim final rule amending its FOIA regulation to comply with new statutory requirements and to clarify the Finance Board's practices and procedures in responding to requests for information with one minor procedural change. The procedural change makes clear that the Office of Resource Management is the agency component responsible for collecting FOIA fees. More specifically, in § 904.9(f), which concerns the collection of FOIA fees, the Finance

Board is replacing the reference to the Secretary to the Board with a reference to the Office of Resource Management.

III. Regulatory Flexibility Act

The Finance Board adopted this amendment to part 904 in the form of an interim final rule and not as a proposed rule. Therefore, the provisions of the Regulatory Flexibility Act do not apply. *See* 5 U.S.C. 601(2), 603(a).

IV. Paperwork Reduction Act

The final rule does not contain any collections of information pursuant to the Paperwork Reduction Act of 1995. *See* 44 U.S.C. 3501 *et seq.* Consequently, the Finance Board has not submitted any information to the Office of Management and Budget for review.

List of Subjects in 12 CFR Part 904

Confidential business information, Federal home loan banks, Freedom of information.

For the reasons stated in the preamble, the Finance Board hereby adopts the interim final rule amending 12 CFR part 904 that was published at 63 FR 37483 on July 13, 1998, as a final rule with the following change:

PART 904—FREEDOM OF INFORMATION ACT REGULATION

1. The authority citation for part 904 continues to read as follows:

Authority: 5 U.S.C. 552, 52 FR 10012 (Mar. 27, 1987).

2. Amend § 904.9 by revising paragraph (f)(2) to read as follows:

§ 904.9 Fees.

(f) * * *

(2) To pay fees and interest assessed under this section, a requester shall deliver to the Office of Resource Management, located at the Federal Housing Finance Board, 1777 F Street N.W., Washington, D.C. 20006, a check or money order made payable to the ''Federal Housing Finance Board.''

* * * * *

Dated: January 27, 1999.

By the Board of Directors of the Federal Housing Finance Board.

Bruce A. Morrison,

Chairperson.

[FR Doc. 99–2589 Filed 2–5–99; 8:45 am]

BILLING CODE 6725–01–P

DEPARTMENT OF TRANSPORTATION

Federal Aviation Administration

14 CFR Part 71

[Airspace Docket No. 99–ASO–2]

Amendment of Class D Airspace; Hunter Army Airfield (AAF)

AGENCY: Federal Aviation Administration (FAA), DOT.

ACTION: Final rule; request for comments.

SUMMARY: This amendment modifies the Hunter AAF Class D surface airspace description by excluding that airspace within a 10-mile radius of Savannah International Airport extending upward from 1,300 feet MSL that underlies the Savannah, GA, Class C airspace area. By definition, Class D surface area airspace extends upward from the surface of the earth to a designated altitude, or to the adjacent or overlying controlled airspace of a higher classification. Since a portion of the Savannah Class C airspace area overlying Hunter AAF extends upward from 1,300 feet MSL, the portion of the Hunter AAF Class D surface area airspace that underlies the Class C airspace area should be without the incorrectly specified upper limit, such as that improperly contained in the current description. Therefore, the Hunter AAF Class D surface area airspace extends upward from the surface to and including 2,500 feet MSL within a 4.5-mile radius of the Hunter AAF, excluding that portion within the Savannah, GA, Class C airspace area extending upward from 1,300 feet MSL, and that airspace north of lat. 32°02′30″N. This action corrects that technical discrepancy.

DATES: *Effective Date:* 0901 UTC, May 20, 1999.

Comments Date: Comments must be received on or before March 10, 1999.

ADDRESSES: Send comments on the proposal in triplicate to: Federal Aviation Administration, Docket No. 99–ASO–2, Manager, Airspace Branch, ASO–520, P.O. Box 20636, Atlanta, Georgia 30320.

The official docket may be examined in the Office of the Regional Counsel for Southern Region, Room 550, 1701 Columbia Avenue, College Park, Georgia 30337, telephone (404) 305–5627.

FOR FURTHER INFORMATION CONTACT: Nancy B. Shelton, Airspace Branch, Air Traffic Division, Federal Aviation Administration, P.O. Box 20636, Atlanta, Georgia 30320; telephone (404) 305–5627.

SUPPLEMENTARY INFORMATION:

Request for Comments on the Rule

Although this action is a final rule, which involves amending the Class D airspace description for Hunter AAF, and was not preceded by notice and public procedure, comments are invited on the rule. This rule will become effective on the date specified in the **DATES** section. However, after the review of any comments and, if the FAA finds further changes are appropriate, it will initiate rulemaking procedures to extend the effective date or to amend the regulation.

Comments that provide the factual basis supporting the views and suggestions presented are particularly helpful in evaluating the effects of the rule, and in determining whether additional rulemaking is required. Comments are specifically invited on the overall regulatory, aeronautical, economic, environmental, and energy-related aspects of the rule which might suggest the need to modify the rule.

The Rule

This amendment to Part 71 of the Federal Aviation Regulations (14 CFR part 71) modifies the Class D airspace description for Hunter AAF by excluding that portion within the Savannah, GA, Class C airspace area. Class D airspace designations for surface areas are published in paragraph 5000 of FAA Order 7400.9F, dated September 10, 1998, and effective September 16, 1998, which is incorporated by reference in 14 CFR 71.1. The Class D airspace designation listed in this document will be published subsequently in the Order.

Since this action only makes a technical amendment to the Class D surface area description and should have no impact on the users of the airspace in the vicinity of Hunter AAF the notice and public procedure under 5 U.S.C. 553(b) are unnecessary.

The FAA has determined that this regulation only involves an established body of technical regulations for which frequent and routine amendments are necessary to keep them operationally current. It, therefore, (1) is not a ''significant regulatory action'' under Executive order 12866; (2) is not a ''significant rule'' under DOT Regulatory Policies and Procedures (44 FR 11034; February 26, 1979); and (3) does not warrant preparation of a regulatory evaluation as the anticipated impact is so minimal. Since this is a routine matter that will only affect air traffic procedures and air navigation, it is certified that this rule will not have a significant economic impact on a substantial number of small entities

under the criteria of the Regulatory Flexibility Act.

List of Subjects in 14 CFR Part 71

Airspace, Incorporation by Reference, Navigation (air).

Adoption of the Amendment

In consideration of the foregoing, the Federal Aviation Administration amends 14 CFR part 71 as follows:

PART 71—[Amended]

1. The authority citation for 14 CFR part 71 continues to read as follows:

Authority: 49 U.S.C. 106(g); 40103, 40113, 40120; EO 10854, 24 FR 9565, 3 CFR 1959–1963 Comp., p. 389; 14 CFR 11.69.

§ 71.1 [Amended]

2. The incorporation by reference in 14 CFR 71.1 of Federal Aviation Administration Order 7400.9F, Airspace Designations and Reporting Points, dated September 10, 1998, and effective September 16, 1998, is amended as follows:

Paragraph 5000—Class D Airspace

* * * * *

ASO GA D Savannah, GA [Revised]

Hunter AAF
(lat. 32°00′35″N, long. 81°08′44″W)

Savannah International Airport
(lat. 32°07′39″N, long. 81°12′08″W)

That airspace extending upward from the surface to and including 2,500 feet MSL within a 4.5-mile radius of Hunter AAF; excluding that portion of the overlying Savannah, GA, Class C airspace area and that airspace north of lat. 32°02′30″N. This Class D airspace is effective during the specific days and times established in advance by a Notice to Airmen. The effective days and times will thereafter be continuously published in the Airport/Facility Directory.

* * * * *

Issued in College Park, Georgia, on January 21, 1999.

Nancy B. Shelton,

Acting Manager, Air Traffic Division, Southern Region.

[FR Doc. 99–2933 Filed 2–5–99; 8:45 am]

BILLING CODE 4910–13–M

DEPARTMENT OF COMMERCE

Bureau of Export Administration

15 CFR Parts 772 and 774

RIN 0694–AB75

[Docket No. 990112008–9008–01]

Revisions to the Commerce Control List: Changes in Missile Technology Controls

AGENCY: Bureau of Export Administration, Commerce.

ACTION: Interim rule with request for comments.

SUMMARY: The Bureau of Export Administration (BXA) maintains the Commerce Control List (CCL), which identifies those items subject to Department of Commerce export controls. This interim rule amends the CCL by revising a number of items subject to control for missile technology reasons. These changes to the CCL are the result of the decisions taken by the Missile Technology Control Regime (MTCR), in November 1997.

The changes made by this rule are intended to conform the list of missile technology related items controlled by the United States to the list agreed and adopted by the countries participating in the MTCR.

Although the Export Administration Act (EAA) expired on August 20, 1994, the President invoked the International Emergency Economic Powers Act and continued in effect the EAR, and to the extent permitted by law, the provisions of the EAA, as amended, in Executive Order 12924 of August 19, 1994, as extended by the President's notices of August 17, 1995 (60 FR 42767), August 14, 1996 (61 FR 42527), August 13, 1997 (62 FR 43629), and August 13, 1998 (63 FR 44121).

DATES: This rule is effective February 8, 1999. Comments must be received by April 9, 1999.

ADDRESSES: Written comments (six copies) should be sent to Patricia Muldonian, Regulatory Policy Division, Bureau of Export Administration, Department of Commerce, P.O. Box 273, Washington, DC 20044.

FOR FURTHER INFORMATION CONTACT: Vince Chin, Office of Nuclear and Missile Technology Controls, Bureau of Export Administration, Telephone: (202) 482–0998.

SUPPLEMENTARY INFORMATION:

Background

At the November, 1997, meeting of the Missile Technology Control Regime (MTCR), the member countries made certain technical revisions in the MTCR's missile technology list. The changes agreed at the November, 1997 meeting have been adopted by the member countries and are contained in this interim rule. Many of the changes redefine the scope of the technical parameters describing missile technology items controlled for export or reexport.

Specifically, this rule makes the following revisions:

(1) Clarifies controls on metal powder production equipment and also includes certain plasma generators and electroburst equipment usable for making spherical metallic powder. These revisions are described in a new entry (ECCN 1B117), which also includes mixers and fluid energy mills previously controlled under ECCN 1B115. ECCN 1B115 will now control liquid propellant production equipment only. All solid propellant production equipment have been consolidated into the new entry (ECCN 1B117).

(2) Clarifies the control text for metal powder described under ECCN 1C111.

(3) Adds a new control for Titanium-stabilized duplex stainless steel (ECCN 1C118). This control has been added to prevent the proliferation of these materials to missile projects of concern.

(4) Broadens controls on certain test, calibration and alignment equipment described in Category 7B for gyroscopes, accelerometers, inertial and navigation equipment described in Category 7A, by replacing the term ''specially designed'' with the term ''designed or modified'' as the equipment modifier and by further defining some specific types of equipment to be controlled. These specific types of equipment include certain balancing machines, indicator heads, motion simulators, positioning/rate tables and centrifuges that are specified in a new entry (ECCN 7B104). In addition, ECCN 7B101 was added to control other production equipment not specified in ECCN 7B104 that are ''designed or modified'' to be used with certain equipment described in Category 7A.

Savings Clause

This rule revises the numbering and structure of certain entries on the Commerce Control List. For items under such entries, BXA will accept either the entries described before February 8, 1999 or the entries described by this rule until May 10, 1999. In addition, this rule imposes new controls on certain items. Shipments of items removed from eligibility under a particular License Exception authorization or the designator NLR, may continue to be exported or

reexported under that License Exception authorization or designator until May 10, 1999, except for shipments of such items to the People's Republic of China. In light of recently enacted Presidential certification requirements involving the export to the People's Republic of China of items controlled for missile technology reasons, contained in section 1512 of the Strom Thurmond Defense Authorization Act for Fiscal Year 1999 (P.L. 105–261), shipments of such items to the People's Republic of China are subject to the licensing requirements of the regulation as of the effective date of publication.

Rulemaking Requirements

1. This final rule has been determined to be not significant for the purposes of Executive Order 12866.

2. Not withstanding any other provision of law, no person is required to respond to nor be subject to a penalty for failure to comply with a collection of information subject to the requirements of the Paperwork Reduction Act unless that collection of information displays a current valid OMB Control Number. This rule involves a collection of information subject to the Paperwork Reduction Act of 1980 (44 U.S.C. 3501 *et seq.*). This collection has been approved by the Office of Management and Budget under control number 0694–0088.

3. This rule does not contain policies with Federalism implications sufficient to warrant preparation of a Federalism assessment under Executive Order 12612.

4. Because a notice of proposed rulemaking and an opportunity for public comment are not required to be given for this rule by the Administrative Procedure Act (5 U.S.C. 553) or by any other law, under section 3(a) of the Regulatory Flexibility Act (5 U.S.C. 603(a) and 604(a)) no initial or final Regulatory Flexibility Analysis has to be or will be prepared.

5. The provisions of the Administrative Procedure Act, (5 U.S.C. 553), requiring notice of proposed rulemaking, the opportunity for public participation, and a delay in effective date, are inapplicable because this regulation involves a military or foreign affairs function of the United States (Sec. 5 U.S.C. 553(a)(1)). Further, no other law requires that a notice of proposed rulemaking and an opportunity for public comment be given for this interim rule. Because a notice of proposed rulemaking and an opportunity for public comment are not required to be given for this rule under 5 U.S.C. or by any other law, the analytical requirements of the Regulatory Flexibility Act (5 U.S.C. 601 *et seq.*) are not applicable.

However, because of the importance of the issues raised by these regulations, this rule is issued in interim form and comments will be considered in the development of final regulations.

Accordingly, the Department encourages interested persons who wish to comment to do so at the earliest possible time to permit the fullest consideration of their views.

The period for submission of comments will close April 9, 1999. The Department will consider all comments received before the close of the comment period in developing final regulations. Comments received after the end of the comment period will be considered if possible, but their consideration cannot be assured. The Department will not accept public comments accompanied by a request that a part or all of the material be treated confidentially because of its business proprietary nature or for any other reason. The Department will return such comments and materials to the person submitting the comments and will not consider them in the development of final regulations. All public comments on these regulations will be a matter of public record and will be available for public inspection and copying. In the interest of accuracy and completeness, the Department requires comments in written form.

Oral comments must be followed by written memoranda, which will also be a matter of public record and will be available for public review and copying.

The public record concerning these regulations will be maintained in the Bureau of Export Administration Freedom of Information Records Inspection Facility, Room 4525, Department of Commerce, 14th Street and Pennsylvania Avenue, N.W., Washington, D.C. 20230. Records in this facility, including written public comments and memoranda summarizing the substance of oral communications, may be inspected and copied in accordance with regulations published in Part 4 of Title 15 of the Code of Federal Regulations. Information about the inspection and copying of records at the facility may be obtained from Henry Gaston, Bureau of Export Administration Freedom of Information Officer, at the above address or by calling (202) 482–0500.

List of Subjects in 15 CFR Parts 772 and 774

Exports, Foreign trade.

Accordingly, parts 772 and 774 of the Export Administration Regulations (15 CFR Parts 730–799) are amended as follows:

1. The authority citation for 15 CFR part 774 is revised to read as follows:

Authority: 50 U.S.C. app. 2401 *et seq.*, 1701 *et seq.*, app. 5; 10 U.S.C. 7420, 7430(e); 18 U.S.C. 2510 *et seq.*; 22 U.S.C. 287c, 3201 *et seq.*, 6004; Sec. 201, Pub. L. 104–58, 109 Stat. 557 (30 U.S.C. 185(s), 185(u)); 42 U.S.C. 2139a, 6212; 43 U.S.C. 1354; 46 U.S.C. app. 466c; E.O. 12924, 3 CFR, 1994 Comp., p. 917; E.O. 13026, 3 CFR, 1996 Comp., p. 228; Notice of August 13, 1998 (63 FR 44121, August 17, 1998).

2. The authority citation for 15 CFR part 772 is revised to read as follows:

Authority: 50 U.S.C. app. 2401 *et seq.*; 50 U.S.C. 1701 *et seq.*; E.O. 12924, 59 FR 43437, 3 CFR, 1994 Comp., p. 917; E.O. 12938, 3 CFR, 1994 Comp., p. 950; E.O. 13026, 3 CFR, 1996 Comp., p. 228; Notice of August 13, 1997 (62 FR 43629, August 15, 1997); Notice of August 13, 1998 (63 FR 44121, August 17, 1998).

3. Part 772 is amended by revising the definition for ''production'' and by adding a definition for ''production equipment'' to read as follows:

PART 772—DEFINITION OF TERMS

* * * * *

''Production''. (General Technology Note) (Cat. 1 and 7)—Means all production stages, such as: product engineering, manufacture, integration, assembly (mounting), inspection, testing, quality assurance.

''Production equipment''. (MTCR context)—Tooling, templates, jigs, mandrels, moulds, dies, fixtures, alignment mechanisms, test equipment, other machinery and components therefor, limited to those specially designed or modified for ''development'' or for one or more phases of ''production''.

* * * * *

PART 774—[AMENDED]

Supplement No. 1 to part 774—the Commerce Control List

4. In Supplement No. 1 to part 774 (the Commerce Control List), Category 1—Materials, Chemicals, ''Microorganisms'', and Toxins, the following Export Control Classification Numbers (ECCNs) are amended:

a. By revising the entry heading and the List of Items Controlled section for ECCN 1B115;

b. By adding ECCN 1B117;

c. By revising the List of Items Controlled section for ECCN 1C111;

d. By adding ECCN 1C118;

e. By revising the Reason for Control section for ECCN 1E001; and

f. By revising the entry heading for ECCN 1E101; to read as follows:

1B115 ''Production equipment'' for the production, handling or acceptance testing of liquid propellants or propellant constituents controlled by 1C011, 1C111 or on the U.S. Munitions List, and specially designed components therefor.

* * * * *

List of Items Controlled

Unit: Equipment in number; components in $ value

Related Controls: (1) For equipment specially designed for the production of military propellants or propellant constituents, see the U.S. Munitions List. (2) Items when specifically designed, developed, configured, adapted or modified to produce an item on the USML are subject to the export licensing authority of the U.S. State Department, Office of Defense Trade Controls (see 22 CFR Part 121).

Related Definitions: N/A.

Items: The list of items controlled is contained in the ECCN heading.

* * * * *

1B117 ''Production equipment'', as follows (see List of Items Controlled), for the production, handling or acceptance testing of solid propellants or propellant constituents controlled by 1C011, 1C111 or on the U.S. Munitions List.

License Requirements

Reason for Control: MT, AT.

Control(s)	Country chart
MT applies to entire entry ..	MT Column 1.
AT applies to entire entry ..	AT Column 1.

License Exceptions

LVS: N/A
GBS: N/A
CIV: N/A

List of Items Controlled

Unit: Equipment in number; components in $ value

Related Controls: (1) See also 1B115. (2) For equipment specially designed for the production of military propellants or propellant constituents, see the U.S. Munitions List. (3) This entry does not control equipment for the ''production'', handling and acceptance testing of boron carbide. (4) Items when specifically designed, developed, configured, adapted or modified to produce an item on the USML are subject to the export licensing authority of the U.S. State Department, Office of Defense Trade Controls (see 22 CFR Part 121.).

Related Definitions: (1) The only batch mixers, continuous mixers, and fluid energy mills controlled in 1B117, are those controlled in 1B117.a through d. (2) Forms of metal powder ''production equipment'' not specified in 1B117.d. are to be evaluated in accordance with 1B117.e.

Items: a. Batch mixers with provision for mixing under vacuum in the range from zero to 13.326 kPa, and with temperature control capability of the mixing chamber and having:

a.1. A total volumetric capacity of 110 liters (30 gallons) or more; and

a.2 At least one mixing/kneading shaft mounted off center;

b. Continuous mixers with provision for mixing under vacuum in the range from zero to 13.326 kPa, and with temperature control capability of the mixing chamber and having:

b.1. Two or more mixing/kneading shafts; and

b.2. Capability to open the mixing chamber.

c. Fluid energy mills usable for grinding or milling propellant or propellant constituents specified in 1C011 or 1C111, or on the U.S. Munitions List.

d. Metal powder ''production equipment'' usable for the ''production'', in a controlled environment, of spherical or atomized materials specified in 1C011 or 1C111 a.1. or a.2., or on the U.S. Munitions List including:

d.1. Plasma generators (high frequency arc-jet) usable for obtaining sputtered or spherical metallic powders with organization of the process in an argon-water environment;

d.2. Electroburst equipment usable for obtaining sputtered or spherical metallic powders with organization of the process in an argon-water environment;

d.3. Equipment usable for the ''production'' of spherical aluminium powders by powdering a melt in an inert medium (e.g. nitrogen).

e. ''Production equipment'' for the production, handling, mixing, curing, casting, pressing, machining, extruding or acceptance testing of solid propellants or propellant constituents described in 1C011 or 1C111, or on the U.S. Munitions List, other than those described in 1B117.a through d.

f. Specially designed components for the equipment controlled in 1B117.a through e.

* * * * *

1C111 Propellants and constituent chemicals for propellants, other than those controlled by 1C011, as follows (see List of Items Controlled).

* * * * *

List of Items Controlled

Unit: Kilograms.

Related Controls: (1) The following materials, whether or not encapsulated in aluminum, beryllium, magnesium, or zirconium are subject to the export licensing authority of the U.S. Department of State, Office of Defense Trade Controls: (See 22 CFR part 121): (a) Spherical aluminum powder with particles of uniform diameter 60 x 10^{-6} m (60 micrometers) or less and an aluminum content of 99 percent or greater; (b) Zirconium, beryllium, boron, magnesium and alloys of these, in particle sizes of less than 60 x 10^{-6} m (60 micrometers), whether spherical, atomized, spheroidal, flaked or ground, consisting 99% or more by weight of any of the above mentioned metals; (c) iron powder with average particle size of 3 x 10^{-6} m (3 microns) or less produced by hydrogen reduction of iron oxide. (2) For propellants and constituent chemicals for propellants not controlled by 1C111, see the U.S. Munitions List.

Related Definitions: N/A.

Items: a. Propulsive substances:

a.1. Spherical aluminum powder, other than that specified on the U.S. Munitions List, with particles of uniform diameter of less than 500 micrometer and an aluminum content of 97% by weight or greater;

a.2. Zirconium, beryllium, boron, magnesium and alloys of these, other than that controlled by the U.S. Munitions List, in particle sizes of less than 500 x 10^{-6} m (500 micrometers), whether spherical, atomized, spheroidal, flaked or ground, consisting 97% or more by weight of any of the above mentioned metals.

a.3. Liquid oxidizers, as follows:

a.3.a. Dinitrogen trioxide;

a.3.b. Nitrogen dioxide/dinitrogen tetroxide;

a.3.c. Dinitrogen pentoxide;

b. Polymeric substances:

b.1. Carboxy-terminated polybutadiene (CTPB);

b.2. Hydroxy-terminated polybutadiene (HTPB), other than that controlled by the U.S. Munitions List;

b.3. Polybutadiene-acrylic acid (PBAA);

b.4. Polybutadiene-acrylic acid-acrylonitrile (PBAN);

c. Other propellant additives and agents:

c.1. Butacene;

c.2. Triethylene glycol dinitrate (TEGDN);

c.3. 2-Nitrodiphenylamine;

c.4. Trimethylolethane trinitrate (TMETN);

c.5. Diethylene glycol dinitrate (DEGDN).

* * * * *

1C118 Titanium-stabilized duplex stainless steel (Ti-DSS):

License Requirements

Reason for Control: MT, AT.

Control(s)	Country chart
MT applies to entire entry.	MT Column 1.
1AT applies to entire entry.	AT Column 1.

License Exceptions

LVS: N/A

GBS: N/A

CIV: N/A

List of Items Controlled

Unit: Kilograms.

Related Controls: N/A.

Related Definitions: N/A.

Items: a. Titanium-stabilized duplex stainless steel (Ti-DSS) having:

a.1. All of the following characteristics:

a.1.a. Containing 17.0–23.0 weight percent chromium and 4.5–7.0 weight percent nickel, and

a.1.b. A ferritic-austenitic microstructure (also referred to as a two-phase microstructure) of which at least 10 percent is austenite by volume (according to ASTM E–1181-87 or national equivalents), and

a.2. Any of the following forms:

a.2.a. Ingots or bars having a size of 100 mm or more in each dimension;

a.2.b. Sheets having a width of 600 mm or more and a thickness of 3 mm or less;

or

a.2.c. Tubes having an outer diameter of 600 mm or more and a wall thickness of 3 mm or less.

* * * * *

1E001 ''Technology'' according to the General Technology Note for the ''development'' or ''production'' of items controlled by 1A001.b, 1A001.c, 1A002, 1A003, 1A004, 1A005, 1A102, 1B or 1C (except 1C980 to 1C984, 1C988, 1C990, 1C991, 1C992, 1C994 and 1C995).

License Requirements

Reason for Control: NS, MT, NP, CB, AT.

Control(s)	Country chart
NS applies to ''technology'' for items controlled by 1A001.b and .c, 1A002, 1A003, 1B001 to 1B003, 1B018, 1B225, 1C001 to 1C010, 1C018, 1C230, 1C231, 1C233, or 1C234.	NS Column 1.
MT applies to ''technology'' for items controlled by 1B001, 1B101, 1B115, 1B116, 1B117, 1C001, 1C007, 1C101, 1C107, 1C011, 1C111, 1C116, 1C117, or 1C118 for MT reasons.	MT Column 1.
NP applies to ''technology'' for items controlled by 1A002, 1B001, 1B101, 1B201, 1B225 to 1B232, 1C001, 1C010, 1C202, 1C210, 1C216, 1C225 to 1C234, 1C236 to 1C238 for NP reasons.	NP Column 1.
CB applies to ''technology'' for items controlled by 1C351, 1C352, 1C353, or 1C354.	CB Column 1.
CB applies to ''technology'' for materials controlled by 1C350.	CB Column 2.
AT applies to entire entry ..	AT Column 1.

* * * * *

1E101 ''Technology'' according to the General Technology Note for the ''use'' of goods controlled by 1A102, 1B001, 1B101, 1B115, 1B116, 1B117, 1C001, 1C007, 1C011, 1C101, 1C107, 1C111, 1C116, 1C117, 1C118, 1D101 or 1D103.

* * * * *

5. In Supplement No. 1 to part 774 (the Commerce Control List), Category 7—Navigation and Avionics, the following Export Control Classification Numbers (ECCNs) are amended:

a. By revising the List of Items Controlled section for ECCN 7B003;

b. By adding ECCN 7B101;

c. By revising the entry heading and List of Items Controlled section for ECCN 7B102;

d. By adding ECCN 7B104;

e. By revising the entry heading for ECCN 7D101; and

f. By revising the entry heading for ECCN 7E101, to read as follows:

7B003 Equipment specially designed for the ''production'' of equipment controlled by 7A (except 7A994).

* * * * *

List of Items Controlled

Unit: $ value.

Related Controls: (1) See also 7B103, (this entry is subject to the licensing authority of the U.S. Department of State, Office of Defense Trade Controls (see 22 CFR part 121) 7B101 and 7B994. (2) This entry includes: inertial measurement unit tester (IMU module); IMU platform tester; IMU stable element handling fixture; IMU platform balance fixture; gyro tuning test station; gyro dynamic balance station; gyro run-in/motor test station; gyro evacuation and filling station; centrifuge fixtures for gyro bearings; accelerometer axis align station; and accelerometer test station.

Related Definitions: N/A.

Items: The list of items controlled is contained in the ECCN heading.

7B101 ''Production equipment'', and other test, calibration, and alignment equipment, other than that described in 7B003, 7B102 and 7B104, designed or modified to be used with equipment controlled by 7A001–7A004 or 7A101–7A104.

License Requirements

Reason for Control: MT, AT.

Control(s)	Country chart
MT applies to entire entry ..	MT Column 1.
AT applies to entire entry ..	AT Column 1.

License Exceptions

LVS: N/A

GBS: N/A

CIV: N/A

List of Items Controlled

Unit: $ value.

Related Controls: (1) See also 7B003, 7B102, 7B104 and 7B994. (2) This entry includes: inertial measurement unit tester (IMU module); IMU platform tester; IMU stable element handling fixture; IMU platform balance fixture; gyro tuning test station; gyro dynamic balance station; gyro run-in/motor test station; gyro evacuation and filling station; centrifuge fixtures for gyro bearings; accelerometer axis align station; and accelerometer test station.

Related Definitions: N/A.

Items: The list of items controlled is contained in the ECCN heading.

7B102 Equipment, other than those controlled by 7B002, designed or modified to characterize mirrors, for laser gyro equipment, as follows (see List of Items Controlled).

* * * * *

List of Items Controlled

Unit: $ value.

Related Controls: N/A.

Related Definitions: N/A.

Items: a. Scatterometers having a measurement accuracy of 10 ppm or less (better).

b. Reflectometers having a measurement accuracy of 50 ppm or less (better).

c. Profilometers having a measurement accuracy of 0.5nm (5 Angstroms) or less (better).

* * * * *

7B104 Equipment, designed or modified to be used with equipment controlled by 7A001–7A004, or 7A101–

7A104, as follows (see List of Items Controlled).

License Requirements

Reason for Control: MT, AT.

Control(s)	Country chart
MT applies to entire entry ..	MT Column 1.
AT applies to entire entry ..	AT Column 1.

License Exceptions

LVS: N/A
GBS: N/A
CIV: N/A

List of Items Controlled

Unit: $ value.

Related Controls: (1) See also 7B101 and 7B994.

Related Definitions: (1) 7B104.a. does not control balancing machines designed or modified for dental or other medical equipment. (2) 7B104.c. and 7B104.d. do not control rotary tables designed or modified for machine tools or for medical equipment. (3) Rate tables not controlled by 7B104.c. and providing the characteristics of a positioning table are to be evaluated according to 7B104.d. (4) Equipment that has the characteristics specified in 7B104.d. which also meets the characteristics of 7B104.c. will be treated as equipment specified in 7B104.c.

Items: a. Balancing machines having all the following characteristics:

a.1. Not capable of balancing rotors/assemblies having a mass greater than 3 Kgm;

a.2. Capable of balancing rotors/assemblies at speeds greater than 12,500 rpm;

a.3. Capable of correcting unbalance in two planes or more; and

a.4. Capable of balancing to a residual specific unbalance of 0.2 gram-mm per kg of rotor mass;

b. Indicator heads (sometimes known as balancing instrumentation) designed or modified for use with machines specified in 7B104.a.

c. Motion simulators/rate tables (equipment capable of simulating motion) having all of the following characteristics:

c.1. Two axes or more;

c.2. Slip rings capable of transmitting electrical power and/or signal information; and

c.3. Having any of the following characteristics:

c.3.a. For any single axis:

c.3.a.1. Capable of rates of rotation of 400 degrees/sec or more, or 30 degrees/sec or less, and

c.3.a.2. A rate resolution equal to or less than 6 degrees/sec and an accuracy equal to or less than 0.6 degrees/sec; or

c.3.b. Having a worst case rate stability equal to or better (less) than plus or minus 0.05% averaged over 10 degrees or more; or

c.3.c. A positioning accuracy equal to or better than 5 arc-second.

d. Positioning tables (equipment capable of precise rotary position in any axis) having the following characteristics:

d.1. Two axes or more; and

d.2. A positioning accuracy equal to or better than 5 arc-second;

e. Centrifuges able to impart accelerations above 100 g and having slip rings capable of transmitting electrical power and signal information.

* * * * *

7D101 ''Software'' specially designed for the ''use'' of equipment controlled by 7A001 to 7A006, 7A101 to 7A106, 7A115, 7B001, 7B002, 7B003, 7B101, 7B102, 7B103 or 7B104.

* * * * *

7E101 ''Technology'', other than ''technology'' controlled by 7E003, according to the General Technology Note for the ''use'' of equipment controlled by 7A001 to 7A006, 7A101 to 7A106, 7A115 to 7A117, 7B001, 7B002, 7B003, 7B101, 7B102, 7B103, 7B104, 7D101 to 7D103.

* * * * *

Dated: February 1, 1999.

R. Roger Majak,

Assistant Secretary for Export Administration.

[FR Doc. 99–2975 Filed 2–5–99; 8:45 am]

BILLING CODE 3510–33–P

DEPARTMENT OF TRANSPORTATION

Coast Guard

33 CFR Part 165

[CGD1–99–006]

RIN 2115–AA97

Safety Zone; Explosive Loads and Detonations Bath Iron Works, Bath, ME

AGENCY: Coast Guard, DOT.

ACTION: Temporary final rule.

SUMMARY: The Coast Guard is establishing a temporary safety zone to close a portion of the Kennebec River to waterway traffic in a 400 foot radius around Bath Iron Works, Bath, Maine for explosive loads and explosives detonations, from 6 a.m. January 30, 1999 through 12 p.m. March 1, 1999. This safety zone is needed to protect persons, facilities, vessels and others in the maritime community from the safety hazards associated with the handling, detonation and transportation of explosives. Entry into this safety zone is prohibited unless authorized by the Captain of the Port.

DATES: This rule is effective from 6 a.m. Saturday January 30 until 12 p.m. Monday March 1, 1999.

FOR FURTHER INFORMATION CONTACT: Lieutenant J.D. Gafkjen, Chief of Response and Planning, Captain of the Port, Portland at (207) 780–3251.

SUPPLEMENTARY INFORMATION:

Regulatory History

As authorized by 5 U.S.C. 553, a notice of proposed rulemaking (NPRM) was not published for this regulation. Good cause exists for not publishing a NPRM and for making this regulation effective in less than 30 days after **Federal Register** publication. Due to the complex planning and coordination involved, final details for the closure were not provided to the Coast Guard until January 20, 1999, making it impossible to publish a NPRM or a final rule 30 days in advance. Publishing an NPRM and delaying its effective date would be contrary to public interest since this safety zone is needed to protect persons, facilities, vessels and others in the maritime community from the safety hazards associated with the handling and detonation of explosives.

Background and Purpose

The Explosive Loads and Detonations will occur from 6 a.m Saturday Janaury 30 until 12 p.m. Monday March 1, 1999. The safety zone covers the waters of the Kennebec River, Bath, ME, in a 400 foot radius around Bath Iron Works, Bath, ME. This safety zone is required to protect the maritime community from the hazards associated with the loading, detonation and transportation of explosives. Entry into this zone will be prohibited unless authorized by the Captain of the Port.

Regulatory Evaluation

This temporary final rule is not a significant regulatory action under section 3(f) of Executive Order 12866 and does not require an assessment of potential costs and benefits under section 6(a)(3) of that order. It has not been reviewed by the Office of Management and Budget under that order. It is not significant under the regulatory policies and procedures of the Department of Transportation (DOT) (44 FR 11040; February 26, 1979). The Coast Guard expects the economic impact of this proposal to be so minimal that a full Regulatory Evaluation under paragraph 10e of the regulatory policies and procedures of DOT is unnecessary. This safety zone involves only a portion

of the Kennebec River. Due to the limited duration of the safety zone, the fact that the safety zone will not restrict the entire channel of the Kennebec River, allowing traffic to continue without obstruction, and that advance maritime advisories will be made, the Coast Guard expects the economic impact of this regulation to be so minimal that a Regulatory Evaluation is unnecessary.

Small Entities

Under the Regulatory Flexibility Act (5 U.S.C. 601 *et seq.*), the Coast Guard must consider whether this proposal will have a significant economic impact on a substantial number of small entities. ''Small entities'' may include (1) small businesses and not-for-profit organizations that are independently owned and operated and are not dominant in their fields and (2) governmental jurisdictions with populations of less than 50,000.

For the reasons addressed under the Regulatory Evaluation above, the Coast Guard expects the impact of this regulation to be minimal and certifies under section 605(b) of the Regulatory Flexibility Act (5 U.S.C. 601 *et seq.*) that this final rule will not have a significant economic impact on a substantial number of small entities.

Collection of Information

This rule contains no collection of information requirements under the Paperwork Reduction Act of 1995 (44 U.S.C. 3501 *et seq.*).

Federalism

The Coast Guard has analyzed this rule under the principles and criteria contained in Executive Order 12612 and has determined that this rule does not have sufficient federalism implications to warrant the preparation of a Federalism Assessment.

Environment

The Coast Guard has considered the environmental impact of this regulation and concluded that, under section 2.B.2.e. of Commandant Instruction M16475.1B, (as revised by 59 FR 38654, July 29, 1994), this rule is categorically excluded from further environmental documentation. A Categorical Exclusion Determination and an Environmental Analysis Checklist is available in the docket for inspection or copying.

List of Subjects in 33 CFR Part 165

Harbors, Marine safety, Navigation (water), Reporting and recordkeeping requirements, Security measures, Waterways.

Regulation

For the reasons set out in the preamble, the Coast Guard amends 33 CFR Part 165 as follows:

1. The authority citation for Part 165 continues to read as follows:

Authority: 33 U.S.C. 1231; 50 U.S.C. 191; 33 CFR 1.05–1(g), 6.04–1, 6.04–6 and 160.5; 49 CFR 1.46.

2. Add temporary section, 165.T01–CGD1–183 to read as follows:

§ 165.T01–CGD1–183 Explosive Load, Bath Iron Works, Bath, ME.

(a) *Location.* The safety zone covers the waters of the Kennebec River, Bath, ME, in a 400 foot radius around Bath Iron Works, Bath, ME.

(b) *Effective date.* The Explosive Loads and Detonations will occur from 6 a.m. Saturday January 30 until 12 p.m. Monday March 1, 1999. The safety zone covers the waters of the Kennebec River, Bath, ME.

(c) *Regulations.*

(1) The general regulations contained in 33 CFR 165.23 apply.

(2) All persons shall comply with the instructions of the Coast Guard Captain of the Port or the designated on scene patrol personnel. U.S. Coast Guard patrol personnel include commissioned, warrant and petty officers of the Coast Guard. Upon being hailed by a U.S. Coast Guard vessel via siren, radio, flashing light, or other means, the operator of the vessel shall proceed as directed.

(3) In accordance with the general regulations in section 165.23 of this part, entry or movement within this zone is prohibited unless authorized by the Captain of the Port, Portland, ME.

Dated: January 29, 1999.

R.A. Nash,

Commander, U.S. Coast Guard, Captain of the Port Portland, Maine.

[FR Doc. 99–2974 Filed 2–5–99; 8:45 am]

BILLING CODE 4910–15–M

ENVIRONMENTAL PROTECTION AGENCY

40 CFR Part 52

[MN55–01–7280a; MN56–01–7281a; MN57–01–7282a; FRL–6230–3]

Approval and Promulgation of State Implementation Plans; Minnesota

AGENCY: Environmental Protection Agency (EPA).

ACTION: Direct final rule.

SUMMARY: This action approves three State Implementation Plan (SIP) revisions for the State of Minnesota which were submitted on October 17, 1997. These SIP revisions modify Administrative Orders for North Star Steel Company and LaFarge Corporation (North Star Steel and LaFarge) located in St. Paul, Minnesota, and GAF Building Materials (GAF) located in Minneapolis, Minnesota. The Orders to these facilities are included as part of Minnesota's SIP to attain and maintain the National Ambient Air Quality Standards (NAAQS) for particulate matter (PM) and sulfur dioxide (SO_2).

In the proposed rules section of this **Federal Register**, the Environmental Protection Agency (EPA) is proposing approval of, and soliciting comments on, these SIP revisions. If adverse comments are received on this action, EPA will withdraw this final rule and address the comments received in response to this action in a final rule based on the related proposed rule, which is being published in the proposed rules section of this **Federal Register**. A second public comment period will not be held. Parties interested in commenting on this action should do so at this time.

DATES: This ''direct final'' rule is effective April 9, 1999, unless EPA receives adverse or critical comments by March 10, 1999. If adverse comment is received, EPA with publish a timely withdrawal in the **Federal Register**, informing the public that the rule will not take effect.

ADDRESSES: Written comments should be sent to: Carlton T. Nash, Chief, Regulation Development Section, Air Programs Branch (AR–18J), United States Environmental Protection Agency, 77 West Jackson Boulevard, Chicago, Illinois 60604. (It is recommended that you telephone Christos Panos at (312) 353–8328 before visiting the Region 5 Office.)

A Copy of these SIP revisions are available for inspection at the following location: Office of Air and Radiation (OAR) Docket and Information Center (Air Docket 6102), room M1500, United States Environmental Protection Agency, 401 M Street S.W., Washington, D.C. 20460, (202) 260–7548.

FOR FURTHER INFORMATION CONTACT: Christos Panos, Regulation Development Section (AR–18J), Air Programs Branch, Air and Radiation Division, United States Environmental Protection Agency, Region 5, 77 West Jackson Boulevard, Chicago, Illinois 60604, (312) 353–8328.

SUPPLEMENTARY INFORMATION:

I. Background

PM SIP. The State submitted SIP revisions intended to demonstrate

attainment and maintenance of the PM NAAQS on November 26, 1991, August 31, 1992, and November 13, 1992. Included in these submittals were Administrative Orders for North Star Steel and LaFarge. On February 15, 1994, at 59 FR 7218, EPA took final action to approve these PM SIP revisions. This final rulemaking also took into consideration three new submittals, provided by the State on February 3, 1993, April 30, 1993, and October 15, 1993. A revised Administrative Order for North Star Steel was included in the April 30, 1993, submittal.

On December 22, 1994, the State submitted amendments to the administrative orders for Lafarge and North Star Steel. EPA took final action to approve these amendments into the Minnesota PM SIP on June 13, 1995, at 60 FR 31088.

SO_2 SIP. On May 29, 1992, the State submitted a revision to the SO_2 SIP for Minneapolis-St. Paul, which included a demonstration of attainment and maintenance of the NAAQS for SO_2. Included in the attainment demonstration was an Administrative Order for GAF. The State submitted a supplemental SIP revision on July 12, 1993. A revised Administrative Order for GAF was included in this submittal and, on April 14, 1994, at 59 FR 17703, EPA took final action to approve the SO_2 SIP revisions for the Minneapolis-St. Paul area.

II. Review of Minnesota's Plan

LaFarge Corporation, Childs Road Facility

The revision submitted on October 17, 1997, consists of applying a chemical dust suppressant to the unpaved roads at the facility. The old Order required daily watering of these roads with the following exceptions: (1) if there was a 0.1 inch rainfall in the preceding 24 hours, (2) if the temperature fell below 32 degrees, or (3) on any day there was no traffic on the road. The revised Order requires LaFarge to apply a chemical dust suppressant on all unpaved roadways, except when the ground is frozen (November–March). Calcium chloride (CaCl) will be applied to all unpaved roads each April. Daily inspections of these roads will be performed to determine if additional dust suppressant is necessary and re-application of CaCl is required to those areas where fugitive dust is observed. These inspections do not need to be performed if there is no traffic on the roads or if the facility is closed for the entire day. The Company is required to keep records of: (1) the day in April every year of initial application of dust suppressant, (2) daily observations of the unpaved roads or if there was no traffic on the roads, and (3) if needed, where and how much additional dust suppressant was applied. The revision also allows the Company to use a dust suppressant other than CaCl only after written approval from the State is obtained.

North Star Steel Company

The revision submitted on October 17, 1997, would allow the Company to add equipment as long as they adhere to the State's insignificant modifications guidelines. The old Order allowed the Company to make changes to their facility without obtaining a modification to the Order as long as the changes did not increase, from any emission point, the Facility's PM emission rate or overall PM emissions, or alter equipment or parameters described in Exhibit 1 of the Order which formed the basis for the PM modeling. The new Order will allow the Company to make changes to their facility without obtaining a modification to the Order as long as the changes do not increase, from any emission point in Exhibit 1, the Facility's PM emission rate, or alter equipment or parameters described in Exhibit 1 of the Order which formed the basis for the PM modeling. The new Order will also allow North Star Steel to install, modify, and operate process or control equipment not listed in Exhibit 1 without obtaining a modification to the Order as long as the installation, modification, and operation of the equipment is an insignificant modification as described in Minn. R. 7007.1250, subp. 1, item A or B, and the Company complies with the requirements of Minn. R. 7007.1250 (previously approved into the SIP on May 24, 1995 at 60 FR 27411).

GAF Building Materials Corporation

The revision submitted on October 17, 1997, consists of the removal of the requirement to use asphalt sulfur content as an indication of the sulfur content of the fuel being burned, and a new process, when oil is being used as a fuel, for sampling and analyzing the mixture of No. 6 fuel oil and knockout oil. The old Order required the Company to sample and analyze the mixture of No. 6 fuel oil and knockout oil on a weekly basis at the burner inlet in order to determine the sulfur content and the heating value of the fuel. The revised Order requires GAF to sample and analyze the mixture of No. 6 fuel oil and knockout oil on a daily basis to determine the percent sulfur content of the blend and on a weekly basis to determine the heating value of the fuel mixture, at a point between the fuel oil storage tank and the combustion units. The new Order also revises all references made to any applicable ASTM Method or another EPA approved ASTM method (as listed in 40 CFR part 60, Appendix A, Method 19, Section 5.2.2).

III. Final Action

Based on the rationale set forth above, EPA is approving the Administrative Order revisions for LaFarge Corporation and North Star Steel Company, located in St. Paul, Minnesota, and GAF Building Materials, located in Minneapolis, Minnesota, as submitted by the State on October 17, 1997. These Orders are included as part of Minnesota's SIP to attain and maintain the NAAQS for PM, and SO_2. EPA has evaluated these SIP revisions and determined that the changes to operations at each facility, as described above, will not result in an increase of emissions and do not jeopardize the PM and SO_2 attainment demonstrations that had previously been submitted by the State and approved by EPA on February 15, 1994, at 59 FR 7218, and April 14, 1994, at 59 FR 17703, respectively.

EPA is publishing this action without prior proposal because EPA views this as a noncontroversial revision and anticipates no adverse comments. However, in a separate document in this **Federal Register** publication, EPA is proposing to approve the State Plan should adverse written comments be filed. This action will be effective without further notice unless EPA receives relevant adverse written comment by March 10, 1999. Should EPA receive such comments, it will publish a final rule informing the public that this action will not take effect. Any parties interested in commenting on this action should do so at this time. If no such comments are received, the public is advised that this action will be effective on April 9, 1999.

IV. Administrative Requirements

A. Executive Order 12866

The Office of Management and Budget (OMB) has exempted this regulatory action from Executive Order (E.O.) 12866, entitled ''Regulatory Planning and Review.''

B. Executive Order 12875: Enhancing Intergovernmental Partnerships

Under E.O. 12875, EPA may not issue a regulation that is not required by statute and that creates a mandate upon a State, local or tribal government, unless the Federal government provides

the funds necessary to pay the direct compliance costs incurred by those governments. If the mandate is unfunded, EPA must provide to the OMB a description of the extent of EPA's prior consultation with representatives of affected State, local and tribal governments, the nature of their concerns, copies of any written communications from the governments, and a statement supporting the need to issue the regulation. In addition, E.O. 12875 requires EPA to develop an effective process permitting elective officials and other representatives of State, local and tribal governments ''to provide meaningful and timely input in the development of regulatory proposals containing significant unfunded mandates.'' This rule does not create a mandate on state, local or tribal governments. The rule does not impose any enforceable duties on these entities. Accordingly, the requirements of section 1(a) of E.O. 12875 do not apply to this rule.

C. Executive Order 13084: Consultation and Coordination With Indian Tribal Governments

Under E.O. 13084, EPA may not issue a regulation that is not required by statute, that significantly or uniquely affects the communities of Indian tribal governments, and that imposes substantial direct compliance costs on these communities, unless the Federal government provides the funds necessary to pay the direct compliance costs incurred by the tribal governments. If the mandate is unfunded, EPA must provide to the OMB in a separately identified section of the preamble to the rule, a description of the extent of EPA's prior consultation with representatives of affected tribal governments, a summary of the nature of their concerns, and a statement supporting the need to issue the regulation. In addition, E.O. 13084 requires EPA to develop an effective process permitting elected and other representatives of Indian tribal governments ''to provide meaningful and timely input in the development of regulatory policies on matters that significantly or uniquely affect their communities.'' This rule does not significantly or uniquely affect the communities of Indian tribal governments. Accordingly, the requirements of section 3(b) of E.O. 13084 do not apply to this rule.

D. Executive Order 13045

Protection of Children from Environmental Health Risks and Safety Risks (62 FR 19885, April 23, 1997), applies to any rule that: (1) is determined to be ''economically significant'' as defined under E.O. 12866, and (2) concerns an environmental health or safety risk that EPA has reason to believe may have a disproportionate effect on children. If the regulatory action meets both criteria, the Agency must evaluate the environmental health or safety effects of the planned rule on children, and explain why the planned regulation is preferable to other potentially effective and reasonably feasible alternatives considered by the Agency.

This rule is not subject to E.O. 13045 because it does not involve decisions intended to mitigate environmental health or safety risks.

E. Regulatory Flexibility

The Regulatory Flexibility Act (RFA) generally requires an agency to conduct a regulatory flexibility analysis of any rule subject to notice and comment rulemaking requirements unless the agency certifies that the rule will not have a significant economic impact on a substantial number of small entities. Small entities include small businesses, small not-for-profit enterprises, and small governmental jurisdictions. This direct final rule will not have a significant impact on a substantial number of small entities because plan approvals under section 111(d) do not create any new requirements but simply approve requirements that the State is already imposing. Therefore, because the Federal approval does not create any new requirements, I certify that this action will not have a significant economic impact on a substantial number of small entities. Moreover, due to the nature of the Federal-State relationship under the Clean Air Act (Act) preparation of a flexibility analysis would constitute Federal inquiry into the economic reasonableness of a State action. The Act forbids EPA to base its actions on such grounds. *Union Electric Co.,* v. *U.S. EPA,* 427 U.S. 246, 255–66 (1976); 42 U.S.C. 7410(a)(2).

F. Unfunded Mandates

Under section 202 of the Unfunded Mandates Reform Act of 1995 (''Unfunded Mandates Act''), signed into law on March 22, 1995, EPA must prepare a budgetary impact statement to accompany any proposed or final rule that includes a Federal mandate that may result in estimated annual costs to State, local, or tribal governments in the aggregate; or to private sector, of $100 million or more. Under section 205, EPA must select the most cost-effective and least burdensome alternative that achieves the objectives of the rule and is consistent with statutory requirements. Section 203 requires EPA to establish a plan for informing and advising any small governments that may be significantly or uniquely impacted by the rule.

The EPA has determined that the approval action promulgated does not include a Federal mandate that may result in estimated annual costs of $100 million or more to either State, local, or tribal governments in the aggregate, or to the private sector. This Federal action approves pre-existing requirements under State or local law, and imposes no new requirements. Accordingly, no additional costs to State, local, or tribal governments, or to the private sector, result from this action.

G. Submission to Congress and the Comptroller General

The Congressional Review Act, 5 U.S.C. 801 et seq., as added by the Small Business Regulatory Enforcement Fairness Act of 1996, generally provides that before a rule may take effect, the agency promulgating the rule must submit a rule report, which includes a copy of the rule, to each House of the Congress and to the Comptroller General of the United States. The EPA will submit a report containing this rule and other required information to the U.S. Senate, the U.S. House of Representatives, and the Comptroller General of the United States prior to the publication of the rule in the **Federal Register**. A major rule cannot take effect until 60 days after it is published in the **Federal Register**. This rule is not a ''major rule'' as defined by 5 U.S.C. 804(2).

H. Petitions for Judicial Review

Under section 307(b)(1) of the Act, petitions for judicial review of this action must be filed in the United States Court of Appeals for the appropriate circuit by April 9, 1999. Filing a petition for reconsideration by the Administrator of this final rule does not affect the finality of this rule for the purposes of judicial review nor does it extend the time within which a petition for judicial review may be filed, and shall not postpone the effectiveness of such rule or action. This action may not be challenged later in proceedings to enforce its requirements. (See section 307(b)(2)).

List of Subjects in 40 CFR Part 52

Environmental protection, Air pollution control, Incorporation by reference, Intergovernmental relations, Particulate matter, Sulfur dioxide, Reporting and recordkeeping requirements.

Dated: January 19, 1999.

JoLynn Traub,

Acting Regional Administrator, Region 5.

Title 40 of the Code of Federal Regulations, chapter I, part 52, is amended as follows:

PART 52—APPROVAL AND PROMULGATION OF IMPLEMENTATION PLANS

1. The authority citation for part 52 continues to read as follows:

Authority: 42 U.S.C. 7401 et seq.

Subpart Y—Minnesota

2. Section 52.1220 is amended by adding paragraph (c)(47) to read as follows:

§ 52.1220 Identification of plan.

* * * * *

(c) * * *

(47) On October 17, 1997, the State of Minnesota submitted amendments to three previously approved Administrative Orders for North Star Steel Company, LaFarge Corporation, and GAF Building Materials, all located in the Minneapolis-St. Paul area.

(i) Incorporation by reference.

(A) Amendments, both dated and effective September 23, 1997, to administrative orders and amendments approved in paragraphs (c)(29) and (c)(41) of this section, respectively, of this section for: LaFarge Corporation (Childs Road facility) and North Star Steel Company.

(B) Amendment Two, dated and effective September 18, 1997, to administrative order and amendment approved in paragraph (c)(30) of this section for GAF Building Materials.

[FR Doc. 99–2787 Filed 2–5–99; 8:45 am]

BILLING CODE 6560–50–P

DEPARTMENT OF HEALTH AND HUMAN SERVICES

Administration for Children and Families

45 CFR Part 1309

RIN 0970–AB31

Head Start Program

AGENCY: Administration on Children, Youth and Families (ACYF), Administration for Children and Families (ACF), HHS.

ACTION: Final rule.

SUMMARY: The Administration on Children, Youth and Families is issuing this final rule to implement the statutory provision that authorizes Head Start grantees to use grant funds to purchase facilities in which to operate Head Start programs.

EFFECTIVE DATES: March 10, 1999. The information collection requirements of §§ 1309.10, 1309.40 and 1309.41 shall be effective on the day they are approved by the Office of Management and Budget (OMB). The OMB approval numbers and date of approval of the information collection requirements will be published in the **Federal Register**.

FOR FURTHER INFORMATION CONTACT: Douglas Klafehn, Deputy Associate Commissioner, Head Start Bureau, Administration for Children, Youth and Families, P.O. Box 1182, Washington, DC 20013; (202) 205–8572.

SUPPLEMENTARY INFORMATION:

I. Program Purpose

Head Start is authorized under the Head Start Act (42 U.S.C. 9801 *et seq.*). It is a national program providing comprehensive developmental services to low-income preschool children, primarily age three to the age of compulsory school attendance, and their families. To help enrolled children achieve their full potential, Head Start programs provide comprehensive health, nutritional, educational, social and other services. Also, section 645A of the Head Start Act provides authority to fund programs for families with infants and toddlers. Programs receiving funds under the authority of this section are referred to as early Head Start programs.

Head Start programs are required to provide for the direct participation of the parents of enrolled children in the development, conduct, and direction of local programs. Parents also receive training and education to foster their understanding of and involvement in the development of their children. In fiscal year 1997 Head Start served approximately 794,000 children through a network of over 2,000 grantee and delegate agencies.

While Head Start is intended to serve primarily children whose families have incomes at or below the poverty line, or who receive public assistance, Head Start regulations permit up to ten percent of the children in local programs to be from families who do not meet these low-income criteria. Tribal grantees can exceed this limit under certain conditions. The Act also requires that a minimum of ten percent of the enrollment opportunities in each program be made available to children with disabilities. Such children are expected to participate in the full range of Head Start services and activities with their non-disabled peers and to receive needed special education and related services.

II. Purpose of the Rule

The Administration for Children and Families (ACF) is establishing a final rule governing the purchase of facilities by Head Start grantees. The purpose of this Rule is to implement the statutory authority of Head Start grantees to use grant funds to purchase facilities in which to operate Head Start programs. This authority, found in section 644(f) of the Head Start Act (42 U.S.C. 9839), was granted in October 1992. The Act allows grantees to apply for grant funds to purchase facilities to carry out Head Start programs and directs the Secretary to establish uniform procedures for Head Start agencies to request such funds. Additional authority for this Rule is found in section 644(c) of the Head Start Act, which mandates the Secretary to prescribe rules or regulations to supplement section 644(f). In March 1994 Congress added provisions to section 644(f) allowing grantees to apply for approval of facility purchases made after December 31, 1986.

III. Summary of the Major Provisions of the Final Rule

A summary the major provisions of the final rule is as follows. The rule:

- Specifies what information must be included in the written application grantees must submit to request to use grant funds to purchase a facility, including what must be included in the cost comparison which grantees must submit as part of their application;
- Requires certain measures to be taken to protect the Federal interest in facilities purchased in whole or in part with ACF grant funds;
- Requires that grantees which acquire facilities with grant funds obtain specified types of insurance and maintain the property acquired in a manner consistent with the purpose for which funds were provided and in compliance with applicable building codes and standards; and
- Includes within the definition of ''facility'' modular units, and requires grantees which seek funding to purchase a modular unit to comply with these regulations, which include provisions applicable only to the purchase of modular units.

IV. Rulemaking History

On December 1, 1994, the Department published a Notice of Proposed Rulemaking (NPRM) in the **Federal Register** (59 FR 61575), proposing to establish a rule to implement the

statutory provision authorizing the use of Head Start grant funds for the purchase of facilities to be used to operate Head Start programs. Copies of the proposed rule were mailed to all Head Start grantees and delegate agencies. Interested persons were given 60 days in which to comment on the proposed rule. During the sixty day comment period the Department received comments from twelve respondents. The respondents included seven Head Start grantees and five public and private agencies interested in Head Start facility matters.

Prior to publication of the NPRM Congress amended the Head Start Act to authorize Head Start grantees to use grant funds to construct and make major renovations to their facilities. This amendment to the Head Start Act, section 644(g), became effective in 1994. Proposed procedures to implement this new authority are set out in a Notice of Proposed Rulemaking published elsewhere today in this **Federal Register**. The procedures on construction and major renovation when made final will amend this final rule so that 45 CFR part 1309 will cover, in one single rule, the use of grant funds to purchase, construct and make major renovations to Head Start facilities.

Section-by-Section Discussion of the Comments Received

Of the twelve parties who submitted comments to the NPRM, three were general expressions of support for the proposed rule. Only those sections for which comments were made or to which technical changes were made are discussed below. The discussion of the sections follow the order of the NPRM table of contents and a notation is made wherever the section designations have been changed or deleted in the final rule.

Section 1309.2—Approval of Previously Purchased Facilities

Comment: We received one comment on the application of these procedures to facilities purchased prior to the enactment of the statute authorizing the use of grant funds to purchase facilities. The respondent states that the wording on previous purchases is confusing and the provision itself unfair and should not be included in the rule because all previous purchases should have met the requirements in place at the time the facilities were purchased.

Response: In March 1994, Congress added to the Head Start Act the provision allowing grantees to apply for facility purchases made after December 31, 1986. This requires that the rule refer to both prospective purchases and purchases already made, which results in wording that is necessarily somewhat awkward in places. To address this we have changed the definition of ''Purchase'' § 1309.3 by adding at the end ''Purchase also refers to an approved purchase of a facility which commenced between December 31, 1986, and October 7, 1992, as permitted by the Head Start Act and § 1309.2 of this part''. This has allowed the deletion of most of the references to previously purchased facilities in the rule. Where clarity of a particular provision of the rule required explicit reference to previously purchased facilities, that phrase was left in the provision in question.

Section 1309.3—Definitions

Comment: One comment to this section, asking for further definition of the phrase ''modular units,'' was received. The comment states that in the past many trailers, mobile classrooms, and modular units have been used by Head Start grantees, and questions have arisen as to when they were to be considered ''equipment'' and when they were considered ''real property subject to the full facility purchase requirements.''

Response: Section 644(f) of the Head Start Act, which this rule implements, states that the ''Secretary shall establish uniform procedures for Head Start agencies to request approval to purchase facilities * * * to be used to carry out Head Start programs.'' The Act makes no distinction between ''equipment'' and ''real property,'' or between temporary and permanent facilities. The policy of this rule, which we believe is consistent with the meaning of the Act, is that the purchase of modular units is subject to the provisions of the rule if they will be used to operate a Head Start program.

The definition of ''useful life'' as defined in the NPRM is vague and has been deleted.

For clarification purposes, we have added a definition of ''*Head Start center or a direct support facility for a Head Start program*'' and made minor edits to several definitions. We revised the definition of ''grantee'' to include reference to ''for-profit'' agency in accordance with the Head Act Reauthorization Amendments in the Coats Human Services Amendments of 1998, Pub. L 105–285.

Section 1309.10—Application

Comments—General: Several respondents to this section expressed concern that grantees might lose a facility they propose to purchase because of delays in securing ACF approval of their application. Two suggestions were received for dealing with this concern. One respondent proposes that there be an expedited approval process for facilities which are defined, according to established criteria, as ''at risk of being sold.'' The same respondent suggests that we establish ''parameters'' in making grant awards for facility purchases and allow a replacement property meeting these ''parameters'' to be purchased within 90 days if the original site is no longer available. Another respondent proposes that the application process be divided into two stages. The first stage would involve general approval of a facility purchase for a particular grantee as a policy matter. At this stage, the Department would determine whether the grantee's current space is inadequate and whether a waiver of non-federal share would be approved if requested, but would not be asked to approve the purchase of an actual facility the grantee is proposing to buy. The second stage would be a ''deal-specific'' approval, designed to allow decisions on a proposed purchase to be made relatively quickly and predictably. In this stage, requests for purchase of particular buildings would be reviewed, based on cost comparisons, environmental impact studies, and the condition of the proposed facility.

Response: We do not agree that it would be advisable to apply any special circumstances for the review of an application for a property ''at risk of being sold'' as suggested by one respondent. The decisions made by the responsible HHS approving official should not be hastened by the pressure of another buyer's interest in a property, but should be made based upon the merits of the application.

However, the concern expressed by the respondents that the review of applications for facility purchases be conducted expeditiously is understandable. In response to these concerns, a new § 1309.12 entitled ''Timely decisions'' has been added to the final rule. Section 1309.12 states that ''The responsible HHS official shall promptly review and make final decisions regarding completed applications under this part.''

In order to expedite the application review process, we strongly encourage all grantees considering the purchase of a facility to discuss their facility needs with the responsible HHS official prior to submitting the formal application or beginning negotiation for the purchase of the facility. As part of these discussions, the grantee and HHS approving official would consider whether the grantee's current space is

adequate and whether funds to complete the purchase and meet any ongoing financing commitments are available, or would be available at the time purchase is made. We believe that as a result of these early discussions, the grantee would be in a better position to submit a complete application which could receive prompt review.

Once a formal application is received by ACF, under these final rules, ACF would complete the review of the application within 60 days of receipt of the application. To the extent that the grantee works closely with ACF in this process, the review may be completed in less than 60 days. Applicants may contact their Regional Administrator to request a review of their initial determination.

Grantees are cautioned that they should not take any irrevocable action, such as entering into a purchase contract, until they have received a written confirmation of the Department's final decision that Head Start funds may be used to purchase the facility.

Comment—Section 1309.10(g): We received one comment on paragraph (g) of § 1309.10, which concerns grantees which apply for grant funds to purchase a facility based on the fact that a lack of alternative facilities will prevent the operation of the program. The respondent expresses a concern that this criterion is too strict and should be changed to allow a purchase if the purchase of the facility will improve program operation.

Response: This respondent's suggestion cannot be adopted. Section 644(f)(2)(C) of the Head Start Act mandates that a grantee seeking approval to use grant funds to purchase a facility demonstrate either that the proposed purchase will result in savings when compared to the costs that would be incurred to acquire the use of an alternative facility to carry out the program, or that there are no alternative facilities and the lack of alternative facilities will prevent the operation of the program. These two criteria are specific and we are thus unable to disregard the language of the statute in favor of the much broader criterion suggested in the comment. However, a clarification was added to this paragraph which requires that the statement explaining how it was determined that there is or was a lack of alternative facilities, be supported, whenever possible, by a written statement from a licensed real estate professional in the grantee's area.

Comments—Section 1309.10(i): Paragraph (i) of § 1309.10, which requires facility purchase applications to include information on the effect the purchase would have on the grantee's ability to meet the non-Federal share requirement, received one comment, which proposes that the non-Federal share requirement be waived for up to three years for programs which lose non-Federal contributions as a result of buying a facility, and that programs be allowed to use the full amount of non-federal contributions received in one year for a facility toward meeting the requirement for non-Federal share in future years.

Response: Non-Federal contributions, which are required by section 640(b) of the Head Start Act, are provided on a budget period basis. The commentor is suggesting that grantees who are relying heavily on accruing non-Federal share by occupying a building free of cost or at below market cost would lose this non-Federal share when purchasing a facility and may require several years to establish their required non-Federal match. However, there is no provision for providing blanket waiver requests across budget periods. Waiver requests must be submitted annually and are considered on a case-by-case basis against the statutory criteria.

Comment—Section 1309.10(j): A comment on paragraph (j) of § 1309.10 asks that we allow the requirement of certification by a licensed engineer to be fulfilled by the state official who reviews the plans and inspects child care facilities for licensing. The respondent states that in rural areas it is sometimes difficult to obtain professional services such as those of an engineer.

Response: The requirement of this paragraph is not that a private engineer make the certification, but that a person qualified to do so certifies that the building is structurally sound. With this in mind we have made a change in the language of this section to allow, in addition to licensed engineers, licensed architects to make the certification. While this change does not specifically address the suggestion made in the comment, it does broaden the categories of professionals who may make the certification, which should alleviate the difficulty some grantees might have experienced in obtaining this service. And, we reiterate that any engineer or architect qualified to judge the structural soundness of buildings of this type may make the certification. This in no way restricts grantees to using engineers or architects from the private sector.

Comment—Section 1309.10(k): The provision in paragraph (k) of § 1309.10 on one-time fees and expenses which are not subject to the limit on administrative costs received two comments. One respondent suggests that the words ''loan fees and related expenses'' be added to the illustrative list of one-time expenses in this paragraph. The other respondent states that expenses related to ownership, such as mortgage payments and maintenance costs, should be considered program costs not subject to the administrative costs limitation. If this cannot be done, the respondent states, the Department should recognize that waivers of the administrative cost limitation will have to be granted in these cases.

Response: We have adopted the first respondent's suggestion to add the words ''loan fees and related expenses'' to the illustrative list of one-time expenses in this paragraph. The suggestion of the second respondent has not been adopted. Grantees must analyze and categorize their costs as either development and administrative or program, depending on the nature and function of the expense, but may categorize costs as dual benefit costs if they are both administrative and programmatic in nature (see 45 CFR 1301.32). Space and related costs are frequently dual benefit costs, but categorization of costs must be done by each grantee based on the circumstances involved. The granting of waivers of the limitation on administrative costs is governed by 45 CFR 1301.32(g), which limits the granting of such waivers to situations in which development and administrative costs are being incurred but the provision of program services has not begun or has been suspended.

Comments—Section 1309.10(n): We received two comments on paragraph (n) of § 1309.10, which requires the application to include an assessment of the impact of the proposed acquisition on the human environment pursuant to the National Environmental Policy Act (NEPA) if the acquisition involves significant renovation or a significant change in land use. One respondent requested that we define more clearly ''significant change in land use'' and ''human environment,'' and a second respondent asked that we define as clearly as possible when the NEPA applies.

Response: We recognize that Head Start grantees may have little or no experience with the NEPA and that more information and guidance is needed to help provide an understanding of the law and its implementing regulations. This guidance will be furnished to grantees and will include a discussion of such terms as ''significant change in land use'' and ''human environment.''

Since publication of the NPRM a draft report of the Office of Inspector General of the Department of Health and Human Services on Head Start facility purchases has pointed out that ACF needs to have, as part of the information submitted by a grantee seeking approval of the use of grant funds to purchase a facility, information concerning possible environmental hazards present in the facility and land. The draft report states that ''The presence of environmental hazards can result in facilities that are unusable because the facilities cannot be licensed as safe for children'' and ''cleanup of hazards may be too costly and cause delays in using the Head Start facility.'' We agree with these statements and have added the phrase ''and a report showing the results of tests for environmental hazards present in the facility, ground water and soil, (or justification why such testing is not necessary)'' to paragraph (n) of § 1309.10 of the final rule.

Clarifying language was added to paragraph (h) in order to require the disclosure of information about ''balloon'' or other unconventional mortgage arrangements to ensure that future mortgage obligations can be met.

Section 1309.11—Cost Comparison

Comment—General: A comment was received which proposes that grantees which purchase facilities be required to take training in facilities management and preventive maintenance, and establish a funded reserve of up to five to ten percent of project cost for major repairs, with the unexpended balance of the fund from each year carried over to the next year.

Response: We will encourage grantees which purchase facilities to use their training and technical assistance funds to purchase needed training. The use of grant funds to establish or pay into a reserve or contingency fund is prohibited by the Office of Management and Budget Circular A–122.

Comment—Section 1309.11(c): A comment was received proposing to add a provision to paragraph (c) of § 1309.11 to increase the operating budgets of programs that have spent little or nothing on their current facilities. The same respondent suggests that, to increase the funds available to pay for facilities, a predictable federal source of funds be established to provide equity grants in the range of 20 to 25 percent of total project costs.

Response: Congress, when it amended the Head Start Act to authorize the purchase of facilities with Head Start grant funds, did not separately appropriate or earmark funds for this purpose. The legislative history of this section indicates that it was not the intent of Congress to fund facility purchases at the expense of enrollment or the provision of services to Head Start children and families.

Comment—Section 1309.11(d): One respondent expressed a concern that the cost comparison section does not include any discussion of the capitalization of mortgage payments for a facility.

Response: Paragraph (d)(2) of § 1309.11 specifies mortgage payments as an ongoing cost which must be separately delineated in the application. Nothing in the cost comparison section or any other part of the final rule is meant to discourage grantees from obtaining bank or other financing and from using grant funds to pay mortgages (both principal and interest). In fact, grantees are encouraged to obtain loans to finance facility purchases, since in most cases ACF will be unable to provide more than a part of the funds needed to purchase a facility unless the debt is amortized.

Comment—Section 1309.11(e): The ten year period for the cost comparison in the case of the proposed purchase of modular units drew a comment from one respondent, who states that it is arbitrary to allow a twenty year comparison for other-than-modular buildings and only a ten year comparison for modular units.

Response: ACF believes it is reasonable to impose a shorter comparison period for the purchase of modular units because they are on average less durable than traditional buildings. As was said in the preamble to the NPRM, the time periods for the comparison were chosen to achieve simplicity and consistency in the preparation and review of the applications, taking into account several factors, including the expected useful life of the facility and the period of the loan which may be needed to make the purchase.

Comment—Section 1309.11(f): There was one comment to paragraph (f) of § 1309.11 which states that if the facility is to be used for purposes in addition to the operation of the Head Start program, charges for use of the facility must be made by the grantee. The Preamble to the NPRM states that this paragraph prohibits shared ownership of facilities purchased with Head Start grant funds, and the respondent expresses the view that shared ownership should be allowed where costs are shared proportionately between the Head Start program and other entities.

Response: As a result of the comments in response to the NPRM, we have reconsidered our previous statement that we would not consider requests for funding which involved co-ownership of a facility. We will consider such proposals under the following circumstances where: the federal interest in the property can be fully protected; co-ownership will not impair the use of the property for Head Start purposes either now or in the future; and co-ownership does not create a prospect that the Federal government will be called on to undertake extensive or burdensome action to protect its interest in the property. One way to meet the first test is for a grantee to propose to purchase ownership of a unit in a project organized as condominium. Commercial as well as residential facilities can be organized as condominiums. The Head Start grantee would own a separate interest in the portion of the facility it uses to conduct its program, and a share in the undivided interest in the common elements of the project. The separation of the grantee's interest in the space which is used for its programs from that of other co-owners will limit the difficulties raised by the entanglement of the Federal interest with those of the facility's non-grantee owner.

While we continue to have these concerns about co-ownership, here in the final rule we are taking a more flexible approach to this question and will allow co-ownership, subject to approval of the responsible HHS official. This approval may be withheld if the official has reason to question the financial capability of the proposed co-owner to meet debt obligations it assumes to pay for the purchase.

Section 1309.21—Recording of Federal Interest and Other Protection of Federal Interest

Two comments were received on § 1309.21 of the NPRM. This section of the NPRM has been redesignated as §§1309.21 and 1309.22 in the final rule to separate and clarify the provisions dealing with protection of the Federal interest (§ 1309.21 of the final rule) and those concerning the rights and responsibilities of various parties in the case of a grantee's default on a mortgage (§ 1309.22 of the final rule). Section 1309.22 of the NPRM has been renumbered § 1309.23 of the final rule.

Comment—Section 1309.21(a): There was one comment on paragraph (a) of § 1309.21 of the NPRM (redesignated as paragraph (d) in the final rule), which concerns the protection of the Federal interest in facilities purchased with grant funds. The respondent states that the exact nature of the federal interest should be specified in the final rule.

Presumably, the respondent states, the interest will take the form of a restrictive covenant running with the land, which would generally not affect the lien priority of a lender's acquisition loan, as opposed to a lien instrument which could affect the lien priority of a lender's loan.

One respondent states that the final rule should, to the extent possible, standardize and describe the procedures ACF will use to authorize facility purchases which involve mortgages, provide a projected time frame for approval by ACF, and identify the criteria (i.e., loan structure and terms) ACF will employ in approving a mortgage. The respondent also suggests that the final rule expressly state that any lien priorities of HHS are subordinate to those of a lender providing an acquisition loan.

Response: In response to the first comment existing regulations and case law establish that the Federal Government has a beneficial ownership interest in all funds on hand with the grantee and property purchased with grant funds. The Federal Government's beneficial ownership interest can affect the lender's priority unless the Federal Government subordinates its interest. There has been a practice in other grant programs to allow banks to take a first lien position on property acquired by a grantee using a blend of grant and mortgage funds where necessary to obtain mortgage financing. If ACF and the mortgagee or creditor agree to subordinate ACF's Federal interest to the mortgagee's or creditor's interest in the property, that agreement must be set forth in a written subordination agreement that is signed by the responsible HHS official and that complies with 45 CFR 1309.21 and any other applicable Federal law.

A new paragraph (a) in § 1309.21 allows for a subordination of interest subject to several qualifications. Paragraph (b) of this section imposes restrictions on the use and disposition of the property and paragraph (c) prohibits the use of the facility for other than the purpose for which the facility was funded without the written approval of the responsible HHS official. The provisions contained in paragraphs (b) and (c) of section 1309.21 are based on the provisions found in 45 CFR parts 74 and 92 and respond to the comment suggesting that ACF explain the requirements for mortgage loan agreements. The new § 1309.22 was added to state the requirements for loan agreements in assigning rights and responsibilities in the event of grantee's default on mortgage, withdrawal or termination.

In § 1309.21, a new paragraph (f) describes certain provisions that must be included in subordination agreements in which the interest of the Federal Government in the subject facility has been subordinated. (A ''subordination agreement'' is an agreement by which one party agrees that its interest in real property should have a lower priority than the interest of another party.) The regulations provide that, in the event of a default under a mortgage in which the Federal Government has subordinated its interest, the lender must notify the Department as provided in the regulation, and that the notification must include a statement prominently displayed at the top of its first page that ''The Federal Interest in certain real property or equipment used for the Head Start program may be at risk, immediately give this notice to the appropriate government official.'' This notification is necessary to ensure that the Federal Government will receive adequate notice that the Federal interest in the property is at risk.

Comment—Section 1309.21(d)—(Section 1309.31(b) and (c) of the final rule): One comment was received on this paragraph, which concerns protection of the Federal interest in modular units which are purchased with grant funds and which are not permanently affixed to the land, or which are affixed to land which is not owned by the grantee. The respondent states that the final rule should more clearly define ''not permanently affixed to the land,'' and should clarify what approvals would be needed in the event the modular unit must be moved to another location.

Response: Paragraph (d) of § 1309.21 of the NPRM has been redesignated paragraph (b) of § 1309.31 of the final rule with the paragraph that comprised § 1309.31 in the NPRM designated as paragraph (a). This rule is not the appropriate place to try to precisely state when modular units are or are not ''permanently affixed to the land.'' For our purposes, the plain meaning of these words will suffice. The respondent's second point, concerning the moving of modular units to another location, raises a valid question and has been addressed by the addition of the sentence ''A modular unit which has been approved for installation in one location may not be moved to another location without the written permission of the responsible HHS official'' to new paragraph (c) in this section.

Comment—Section 1309.21(e)—(Section 1309.22 in final rule): One respondent states that the final rule should, to the extent possible, standardize and describe the procedures ACF will use to authorize facility purchases which involve mortgages, provide a projected time frame for approval by ACF, and identify the criteria (i.e., loan structure and terms) ACF will employ in approving a mortgage.

Response: Section 1309.21(e) of the NPRM has been substantially revised. This section of the final rule reflects suggestions made in the comment and our experience dealing with lenders who have loaned money to Head Start grantees to finance the purchase of facilities. Section 1309.22(a) of the final rule contains provisions required in a mortgage agreement, signed by a grantee which is borrowing money to finance the purchase of a facility, regarding circumstances in which the grantee defaults on the loan or ceases to be the designated Head Start agency. The purpose of this section is to make sure that Head Start facilities continue to be available to provide services to children and families in the community and are not lost to Head Start because of the failure of a grantee to meet its mortgage commitments, or because the grantee leaves the program. In carrying out this purpose we have sought to be reasonable and fair to all parties involved, including the lender, while protecting HHS's interest in the property.

The final rule includes a description of the terms which must be included in the mortgage agreement for a facility purchased with Head Start grant funds. These are agreements which must be followed if the grantee defaults or the grantee agency ceases to be the designated Head Start agency. While no attempt is made to specify all the terms which such agreements must contain, § 1309.22(a) does establish certain required provisions of these agreements. For example, such agreements must provide that in the case of a default by the grantee ACF has the right to ensure the default is cured by the grantee or another agency designated by ACF. The successor grantee would assume obligations and rights under the loan and mortgage agreements with the lender. The assumption of obligations under the loan is subject to the approval of the mortgagee or creditor, which may not be unreasonably withheld. ACF is requiring that the agreement provides ACF 60 days upon notification by the grantee of default to ensure the default is cured. The 60 day period is an increase over the 30 day period required in the NPRM. ACF is lengthening the required period before foreclosure because it is likely that the agency will need the full 60 days in some instances

to intervene. The Head Start program's response will require determining why the grantee did not fulfill its obligations under the mortgage, whether it has the capacity to resolve the problem without the intervention of the Head Start program, whether additional assistance is needed, and whether the grantee's failure is grounds for summary suspension. If the grantee is suspended, an interim grantee will have to be identified which will continue to operate the Head Start program.

ACF has revised the language in paragraph (c) to provide that the mortgagee or creditor shall pay ACF that percentage of the proceeds from the foreclosure sale of the property attributable to the Federal share in the value of the property. The new language more clearly states the requirement for calculating the amount of the sale proceeds due the Federal Government. The Federal share of a facility purchased with Head Start grant funds and sold after foreclosure by a lender is calculated based on the amount of the Federal contribution to the cost of acquiring the facility. For a facility purchased through use of a mortgage the amount of the Federal contribution includes grant funds used for the down payment on the facility, payments on the principal and interest on the mortgage and the cost of any renovations.

Section 1309.22—Insurance, Bonding and Maintenance (§ 1309.23 of Final Rule)

Comments: One comment to § 1309.22(a)(i) of the NPRM (now § 1309.23 of the final rule) states that it is assumed that this provision is not intended to prevent lenders from obtaining standard mortgagee title insurance coverage to safeguard their interests in the facility. A second respondent suggests that, in addition to title insurance and physical destruction insurance, other insurance, such as general liability and builder's risk insurance, will be needed to reflect ownership and contractual obligations. This comment states that physical destruction insurance should cover the ''replacement value'' rather than the ''full appraised value of the facility,'' since an appraisal may not reflect the actual cost of the facility and its contents.

Response: The assumption of the first respondent is correct. With respect to the second comment, we have changed § 1309.22(a) of the NPRM (§ 1309.23(a) of the final rule) to require grantees to provide the same insurance coverage as they provide to other property owned by them, but not less than the coverage delineated in this rule, and physical destruction insurance for the full replacement value of the facility. General liability insurance is covered by 45 CFR 1301.11(a), which requires private Head Start grantees and delegate agencies to carry reasonable amounts of student accident insurance, liability insurance for accidents on their premises, and transportation liability insurance.

Section 1309.33—Inspection

Comment: This section, which concerns the inspection of modular unit installations, received one comment, which suggests that we allow state officials to do these inspections. The reason is the same as the reason for the comment made to § 1309.10(j), above, that in rural areas it may be difficult to obtain engineers to do the inspections.

Response: Our response here is the same as it for the similar comment to § 1309.10(j): We have changed the language of the NPRM to allow architects as well as engineers to make the inspections, but have not otherwise altered the NPRM. As with § 1309.10(j), we wish to make it clear that any engineer or architect qualified to judge the soundness of the modular unit and its installation—whether working in the private or public sector—may make the certification.

Section 1309.41—Record Retention

Comment: A comment was received stating that it should be explicitly stated that the record-keeping requirements of this section are not meant to apply to lenders.

Response: The NPRM states that all records pertinent to the purchase must be maintained *by the grantee* for the period stated. Since this is clear by itself, we state here only that this requirement applies to Head Start grantees only and has no application to lenders.

Section 1309.42—Audit of Mortgage; Five Year Appraisal—(Reference to Five Year Appraisal Has Been Deleted From the Final Rule)

Comment: A comment on this section, which requires an appraisal of the value of a facility purchased with grant funds at least once every five years, states that the appraisal will be unnecessary and a poor use of program money.

Response: Upon reconsideration, we agree with the respondent that the requirement of an appraisal of the property at least once every five years is unnecessary and not the best use of scarce grant funds. We have deleted this requirement.

Section 1309.43—Use of Grant Funds to Pay Fees

We received no comments on this section and made no technical changes.

Section 1309.44—Program Income (Deleted From the Final Rule)

Comments: Two comments on this section disagree with the mandate of this section that program income, other than income from the sale of equipment or real property purchased with grant funds, be deducted from the total allowable costs of the budget period in which the income was produced.

Response: Generally, grantees are authorized to use program income under the additional costs alternative (which allows the use of the income to further eligible program objectives) unless there are persuasive reasons not to allow this alternative. The NPRM, however, limits the use of income derived from a facility purchased with grant funds to the deductive alternative, which requires the income to be deducted from the grantee's total costs for the budget period. Upon reflection, we are no longer convinced that there are persuasive reasons to limit grantees' flexibility on the use of this program income as a general rule, and this section has been deleted to reflect this change. Questions regarding program income from the sale or rental of real property purchased with grant funds will be answered by reference to the applicable provisions of 45 CFR part 74 or part 92. We wish to encourage grantees to collocate services with other service providers in the community and to use the facility, and program income generated from it, to further the goals and objectives of the program.

Section 1309.45—Independent Analysis (Redesignated § 1309.44 in This Final Rule)

Comment: One comment to this section was received, which proposed that this analysis should be conducted within 45 days to avoid the risk of grantees losing lenders and facilities.

Response: We appreciate that the independent analysis should not unduly delay a decision on the application. On the other hand if there were an unusually complicated transaction presented it would not be advisable to abandon the analysis because the 45 day period had expired. We therefore view this 45 day period as a goal which we expect to achieve in the future except under unusual circumstances.

This section has been redesignated § 1309.44 as a result of the deletion of the NPRM section on program income.

V. Impact Analysis

Executive Order 12866

Executive Order 12866 requires that regulations be drafted to ensure that they are consistent with the priorities and principles set forth in the Executive Order. The Department has determined that this rule is consistent with these priorities and principles. This Final Rule implements the statutory authority for Head Start grantees to apply to use grant funds to purchase facilities. Congress made no additional appropriation to fund this new authority, however, and so any money spent toward the purchase of facilities for Head Start programs is money that would have been spent otherwise by the program or other programs from the same appropriation amount.

Regulatory Flexibility Act of 1980

The Regulatory Flexibility Act (5 U.S.C. CH. 6) requires the Federal government to anticipate and reduce the impact of rules and paperwork requirements on small businesses. For each rule with a ''significant economic impact on a substantial number of small entities'' an analysis must be prepared describing the rule's impact on small entities.

Small entities are defined by the Act to include small businesses, small non-profit organizations and small governmental entities. While these regulations would affect small entities, they would not affect a substantial number. Furthermore, the cost of the application process and other activities undertaken as a result of these regulations will not have a significant economic impact because the Head Start program covers 80% of the allowable costs of grantees under the program. The remaining costs associated with compliance are part of the share of costs grantees agree to meet from their own resources when they enter the Head Start program. For these reasons, the Secretary certifies that this rule will not have a significant impact on substantial numbers of small entities.

Paperwork Reduction Act

Under the Paperwork Reduction Act of 1995, Pub. L. 104–13, all Departments are required to submit to the Office of Management and Budget (OMB) for review and approval any reporting or record-keeping requirement inherent in a proposed or final rule. This final rule contains information collection and record-keeping requirements in §§ 1309.10 (application), 1309.40 (copies of documents), and 1309.41 (record retention) which have been submitted to OMB for review and approval in accordance with the Paperwork Reduction Act.

The respondents to the information collection requirements in the rule are Head Start grantees who may be State or local non-profit agencies or organizations. The Department needs to require this collection of information in order to assure that grantees who apply for approval to purchase a facility with Head Start funds have followed certain necessary legal and administrative procedures. Also these collection of information requirements are necessary for monitoring purposes.

The grantees who will be affected by these requirements will be those who request approval and are approved to purchase facilities for the purpose of operating a Head Start program. Based on the average number of grantees who have requested approval from the Department since the statutory authority became effective, October 7, 1992, the estimated annual number of grantees that will be affected is 200.

The actual submittal of an application (§ 1309.10) from a grantee to purchase a facility is a one time activity which is preceded by a number of preparatory activities. We estimate the time it will take to prepare the application in accordance with the requirements of this rule is 40 hours per grantee, calculated over a period of time. On an annual basis, the total hours estimated for submittal of applications from grantees are 8,000.

For copies of documents (§ 1309.40) and record retention (§ 1309.41) activities, we estimate the number of hours to be 1 hour per grantee and the total annual hours for all grantees who submit applications to be 200.

The Administration for Children and Families (ACF) will consider comments by the public on these proposed collections of information in:

- Evaluating whether the proposed collections are necessary for the proper performance of the functions of ACF, including whether the information will have practical utility;
- Evaluating the accuracy of ACF's estimate of the burden of the proposed collections of information;
- Enhancing the quality, usefulness, and clarity of the information to be collected; and
- Minimizing the burden of the collection of information on those who are to respond.

OMB is required to make a decision concerning the collection of information contained in this final rule between 30 and 60 days after publication of this document in the **Federal Register**. Therefore, a comment is best assured of having its full effect if OMB receives it within 30 days of publication. Written comments to OMB for the proposed information collection should be sent directly to the following: Office of Management and Budget, Paperwork Reduction Project, 725 17th Street, NW, Washington, DC 20503, Attn: Wendy Taylor.

List of Subjects in 45 CFR Part 1309

Acquisition, Facilities Purchase, Head Start, Real Property, Modular Units.

(Catalog of Federal Domestic Assistance Program Number 93.600, Project Head Start)

Dated: August 3, 1998.

Olivia A. Golden,

Assistant Secretary for Children and Families.

Approved: October 28, 1998.

Donna E. Shalala,

Secretary.

For the reasons set forth in the Preamble, 45 CFR Chapter XIII is amended by adding Part 1309 as follows:

PART 1309—HEAD START FACILITIES PURCHASE

Subpart A—General

Sec.
1309.1 Purpose and application.
1309.2 Approval of previously purchased facilities.
1309.3. Definitions.

Subpart B—Application Procedures

1309.10 Application.
1309.11 Cost comparison.
1309.12 Timely decisions.

Subpart C—Protection of Federal Interest

1309.20 Title.
1309.21 Recording of Federal interest and other protection of Federal interest.
1309.22 Rights and responsibilities in the event of grantee's default on mortgage, or withdrawal or termination.
1309.23 Insurance, bonding, and maintenance.

Subpart D—Modular Units

1309.30 General.
1309.31 Site description.
1309.32 Statement of procurement procedure for modular units.
1309.33 Inspection.
1309.34 Costs of installation of modular unit.

Subpart E—Other Administrative Provisions

1309.40 Copies of documents.
1309.41 Record retention.
1309.42 Audit of mortgage.
1309.43 Use of grant funds to pay fees.
1309.44 Independent analysis.

Authority: 42 U.S.C. 9801 *et seq.*

Subpart A—General

§ 1309.1 Purpose and application.

This part prescribes regulations implementing sections 644(c) and 644(f)

of the Head Start Act, 42 U.S.C. 9801 *et seq.*, as it applies to grantees operating Head Start programs under the Act. It describes the procedures for applying for Head Start grant funds to purchase facilities in which to operate Head Start programs, and the conditions under which grant funds may be awarded to purchase facilities. It also specifies the measures which must be taken to protect the Federal interest in facilities purchased with Head Start grant funds.

§ 1309.2 Approval of previously purchased facilities.

Head Start grantees which purchased facilities after December 31, 1986, and before October 7, 1992, may request retroactive approval of the purchase by submitting an application which conforms to the requirements of this Part and the Act. Grant funds may be used to pay facility purchase costs incurred only after the responsible HHS official approves an application for a previously purchased facility.

§ 1309.3 Definitions.

As used in this part,

ACF means the Administration for Children and Families in the Department of Health and Human Services, and includes the Regional Offices.

Acquire means to purchase in whole or in part with Head Start grant funds through payments made in satisfaction of a mortgage agreement (both principal and interest), as a down payment, for professional fees, for closing costs, and for any other costs associated with the purchase of the property that are usual and customary for the locality.

Act means the Head Start Act, 42 U.S.C. section 9801, *et seq.*

ACYF means the Administration on Children, Youth and Families, a component of the Administration for Children and Families in the Department of Health and Human Services.

Facility means a structure such as a building or modular unit appropriate for use by a Head Start grantee to carry out a Head Start program.

Grant funds means Federal financial assistance received by a grantee from ACF to administer a Head Start program pursuant to the Head Start Act.

Grantee means the local public, private non-profit or for-profit agency designated to operate a program pursuant to 42 U.S.C. 9836 or 42 U.S.C. 9840a.

Head Start center or a direct support facility for a Head Start program means a facility used primarily to provide Head Start services to children and their families, or for administrative or other activities necessary to the conduct of the Head Start program.

Modular unit means a portable prefabricated structure made at another location and moved to a site for use by a Head Start grantee to carry out a Head Start program.

Purchase means to buy an existing facility, either outright or through a mortgage. Purchase also refers to an approved purchase of a facility, commenced between December 31, 1986 and October 7, 1992, as permitted by the Head Start Act, and by § 1309.2 of this part.

Real property means land, including land improvements, structures and appurtenances thereto, excluding movable machinery and equipment.

Responsible HHS official means the official who is authorized to make the grant of financial assistance to operate a Head Start program, or such official's designee.

Subpart B—Application Procedures

§ 1309.10 Application.

A grantee which proposes to use grant funds to purchase a facility must submit a written application to the responsible HHS official. The application must include the following information:

(a) A legal description of the site of the facility, and an explanation of the appropriateness of the location to the grantee's service area, including a statement of the effect that purchase of the facility has had or will have on the transportation of children to the program, on the grantee's ability to collaborate with other child care, social services and health providers, and on all other program activities and services.

(b) Plans and specifications of the facility, including information on the size and type of structure, the number and a description of the rooms and the lot on which the building is located (including the space available for a playground and for parking).

(c) The cost comparison described in § 1309.11 of this part.

(d) If minor renovations are necessary to make the facility suitable to carry out the Head Start program, a description of the renovations, and the plans and specifications required by paragraph (b) of this section for the facility as it will be after renovations are complete.

(e) The intended uses of the facility, including information demonstrating that the facility will be used principally as a Head Start center or a direct support facility for a Head Start program. If the facility is to be used for purposes in addition to the operation of the Head Start program, the grantee must state what portion of the facility is to be used for such other purposes.

(f) Assurance that the facility complies (or will comply after completion of the renovations described in paragraph (d) of this section) with local licensing and code requirements, the access requirements of the Americans with Disabilities Act (ADA), if applicable, and section 504 of the Rehabilitation Act of 1973. The grantee also will assure that it has met the requirements of the Flood Disaster Protection Act of 1973, if applicable.

(g) If the grantee is claiming that the lack of alternative facilities will prevent or would have prevented operation of the program, a statement of how it was determined that there is or was a lack of alternative facilities. This statement must be supported, whenever possible, by a written statement from a licensed real estate professional in the grantee's service area. If a grantee requesting approval of the previous purchase of a facility is unable to provide such statements based on circumstances which existed at the time of the purchase, the grantee and the licensed real estate professional may use present conditions as a basis for making the determination.

(h) The terms of any proposed or existing loan(s) related to the purchase of the facility and the repayment plans (detailing balloon payments or other unconventional terms, if any) and information on all other sources of funding of the purchase, including any restrictions or conditions imposed by other funding sources.

(i) A statement of the effect that the purchase of the facility would have on the grantee's meeting of the non-Federal share requirement of section 640(b) of the Head Start Act, including whether the grantee is seeking a waiver of its non-Federal share obligation under that section of the Act.

(j) Certification by a licensed engineer or architect that the building is structurally sound and safe for use as a Head Start facility. If minor renovations are necessary to make the facility suitable for use to carry out a Head Start program, the application must include a certification by a licensed engineer or architect as to the cost and technical appropriateness of the proposed renovations.

(k) A statement of the effect that the purchase of a facility would have on the grantee's ability to meet the limitation on development and administrative costs in section 644(b) of the Head Start Act. One-time fees and expenses necessary to the purchase, such as the down payment, the cost of necessary minor renovations, loan fees and related

expenses, and fees paid to attorneys, engineers, and appraisers, are not considered to be administrative costs.

(l) A proposed schedule for acquisition, renovation and occupancy of the facility.

(m) Reasonable assurances that the applicant will obtain, or in the case of a previously purchased facility, has obtained a fee simple or such other estate or interest in the site sufficient to assure undisturbed use and possession for the purpose of operating the Head Start program. If the grantee proposes to purchase a facility without also purchasing the land on which the facility is situated, the application must describe the easement, right of way or land rental it will obtain or has obtained to allow it sufficient access to the facility.

(n) An assessment of the impact of the proposed acquisition on the human environment if it involves significant renovation or a significant change in land use, including substantial increases in traffic in the surrounding area due to the provision of Head Start transportation services, pursuant to section 102(2)(C) of the National Environmental Policy Act of 1969 (42 U.S.C. 4332(2)(C)) and its implementing regulations (40 CFR parts 1500–1508), and a report showing the results of tests for environmental hazards present in the facility, ground water, and soil (or justification why such testing is not necessary). In addition, such information as may be necessary to comply with the National Historic Preservation Act of 1966 (16 U.S.C. 470f) must be included.

(o) Assurance that the grantee will comply with the requirements of the Uniform Relocation Assistance and Real Property Acquisition Policies Act of 1970, as amended (42 U.S.C. 4601 *et seq.* and 49 CFR part 24), and information about the costs that may be incurred due to compliance with this Act.

(p) A statement of the share of the cost of purchase that will be paid with grant funds.

(q) For a grantee seeking approval of a previous purchase, a statement of the extent to which it has attempted to comply and will be able to comply with the provisions of § 1309.22(a) of this part.

(r) Such additional information as the responsible HHS official may require.

§ 1309.11 Cost comparison.

(a) A grantee proposing to purchase a facility with grant funds must submit a detailed estimate of the cost of the proposed purchase, including the cost of any necessary minor renovations, and must compare the cost of purchasing the proposed facility to the cost of renting an alternative facility.

(b) All costs of purchase and ownership must be identified, including, but not limited to, professional fees, minor renovation costs, moving expenses, additional transportation costs, maintenance, taxes, insurance, and easements, rights of way or land rentals. An independent appraisal of the current value of the facility proposed to be purchased or previously purchased, made by a professional appraiser, must be included.

(c) The comparison described in paragraph (a) of this section must compare the cost of the proposed facility to the cost of the facility currently used by the grantee, unless the grantee has no current facility, will lose the use of its current facility, intends to continue to use its current facility after it purchases the new facility, or has shown to the satisfaction of the responsible HHS official that its existing facility is inadequate. Where the grantee's current facility is not used as the alternate facility, the grantee must use for comparison a facility (or facilities) available for lease in the grantee's service area and which are usable as a Head Start facility (meaning a facility large enough to meet the foreseeable needs of the Head Start grantee, and which complies with local licensing and code requirements and the access requirements of the Americans With Disabilities Act, if applicable, and section 504 of the Rehabilitation Act of 1973) or which can be made useable through minor renovation, the cost of which shall be included in the cost comparison. In the case of an application for approval of the previous purchase of a facility, the cost of the present facility must be compared to the cost of the facility used by the grantee before purchase of its current facility. If the facility used by the grantee before the purchase of its present facility was deemed inadequate by the responsible HHS official, the grantee had no previous facility, or if the grantee continued to use its previous facility after the current facility was purchased the alternative facility shall be an available, appropriate facility (or facilities) of comparable size that was available for rent in the grantee's service area at the time of its purchase of the current facility.

(d) The grantee must separately delineate the following expenses in the application:

(1) One-time costs, including, but not limited to, the down payment, professional fees, moving expenses, the cost of site preparation and installation of a modular unit, and the costs of necessary minor renovations; and

(2) Ongoing costs, including, but not limited to, mortgage payments, insurance premiums, maintenance costs, and property taxes. If the grantee is exempt from the payment of property taxes, this fact must be stated.

(e) The period of comparison is twenty years, except that for the purchase of a modular unit the period of comparison is ten years. For a proposed purchase the period of comparison begins on the date on which the proposal is made. For approvals of previous purchases, the period of comparison begins on the date the purchase of the facility took place.

(f) If the facility is to be used for purposes in addition to the operation of the Head Start program, the cost of use of that part of the facility used for such other purposes must be allocated in accordance with applicable Office of Management and Budget cost principles.

§ 1309.12 Timely decisions.

The responsible HHS official shall promptly review and make final decisions regarding completed applications under this part.

Subpart C—Protection of Federal Interest

§ 1309.20 Title.

Title to facilities acquired with grant funds vests with the grantee upon acquisition, subject to the provisions of this part.

§ 1309.21 Recording of Federal interest and other protection of Federal interest.

(a) The Federal Government has an interest in all real property and equipment purchased with grant funds for use as a Head Start facility. The responsible HHS official may agree to subordinate the Federal interest in such property to that of a lender which finances the purchase of the property subject to the conditions set forth in paragraph (f) of this section.

(b) Facilities acquired with grant funds may not be mortgaged or used as collateral, or sold or otherwise transferred to another party, without the written permission of the responsible HHS official.

(c) Use of the facility for other than the purpose for which the facility was funded, without the express written approval of the responsible HHS official, is prohibited.

(d) Immediately upon purchasing a facility with grant funds, or receiving permission to use funds for a previously purchased facility, the grantee shall

record a Notice of Federal Interest in the appropriate official records for the jurisdiction in which the facility is located. The Notice shall include the following information:

(1) The date of the award of grant funds for the purchase of the property to be used as a Head Start facility, and the address and legal description of the property to be purchased;

(2) That the grant incorporated conditions which include restriction on the use of the property and provide for a Federal interest in the property;

(3) That the property may not be used for any purpose inconsistent with that authorized by the Head Start Act and applicable regulations;

(4) That the property may not be mortgaged or used as collateral, sold or otherwise transferred to another party, without the written permission of the responsible HHS official;

(5) That these grant conditions and requirements cannot be altered or nullified through a transfer of ownership; and

(6) The name (including signature) and title of the person who completed the Notice for the grantee agency, and the date of the Notice.

(e) Grantees must meet all of the requirements in 45 CFR parts 74 or 92 pertaining to the purchase and disposition of real property, or the use and disposal of equipment, as appropriate.

(f) In subordinating its interest in a facility purchased with grant funds, the responsible HHS official does not waive application of paragraph (d) of this section and § 1309.22. A written agreement by the responsible HHS official to subordinate the Federal interest must provide:

(1)(i) The lender shall notify the Office of the Regional Administrator, Administration for Children and Families, the Office of the Commissioner, Administration on Children, Youth and Families, Washington, D.C., and the Office of the General Counsel, Department of Health and Human Services, Washington, DC, or their successor agencies, immediately, both telephonically and in writing of any default by the Head Start grantee;

(ii) Written notice of default must be sent by registered mail return receipt requested; and,

(iii) The lender will not foreclose on the property until at least 60 days after the required notice by the lender has been sent.

(2) Such notice will include:

(i) The full names, addresses, and telephone numbers of the lender and the Head Start grantee;

(ii) The following statement prominently displayed at the top of the first page of the notice: ''The Federal Interest in certain real property or equipment used for the Head Start Program may be at risk. Immediately give this notice to the appropriate government official'';

(iii) The date and nature of the default and the manner in which the default may be cured; and

(iv) In the event that the lender will be exercising its remedy of foreclosure or other remedies, the date or expected date of the foreclosure or other remedies.

(3) Head Start grantees which purchase facilities with respect to which the responsible HHS official has subordinated the Federal Interest to that of the lender must keep the lender informed of the current addresses and telephone numbers of the agencies to which the lender is obligated under paragraph (b) of this section to give notice in the event of a default.

§ 1309.22 Rights and responsibilities in the event of grantee's default on mortgage, or withdrawal or termination.

(a) The mortgage agreement, or security agreement in the case of a modular unit which is proposed to be purchased under a chattel mortgage, shall provide in the case of default by the grantee or the withdrawal or termination of the grantee from the Head Start program that ACF may intervene. In the case of a default, the mortgage agreement or security agreement must provide that ACF may intervene to ensure that the default is cured by the grantee or another agency designated by ACF and that the lender shall accept the payment of money or performance of any other obligation by ACF's designee, for the grantee, as if such payment of money or performance had been made by the grantee. The agreement shall also provide that ACF will have a period of 60 days after notification by the grantee of default in which to intervene to attempt to cure the default. The agreement shall further provide that in the event of a default, or the withdrawal or termination of the grantee the mortgage may be assumed by an organization designated by ACF. The mortgagee or creditor will have the right to approve the organization designated to assume the mortgage, but such approval will not be withheld except for good reason. The provisions required for inclusion in mortgages must be included in the mortgages of previously purchased facilities unless a convincing justification for not doing so is shown by the Head Start grantee.

(b) The grantee must immediately provide the responsible HHS official with both telephonic and written notification of a default of any description on the part of the grantee under a real property or chattel mortgage.

(c) In the event that a default is not cured and foreclosure takes place, the mortgagee or creditor shall pay ACF that percentage of the proceeds from the foreclosure sale of the property attributable to the Federal share as defined in 45 CFR 74.2, or, if part 92 is applicable, to ACF's share as defined in 45 CFR 92.3. If ACF and the mortgagee or creditor have agreed that ACF's Federal interest will be subordinated to the mortgagee's or creditor's interest in the property, that agreement must be set forth in a written subordination agreement that is signed by the responsible HHS official and that complies with § 1309.21 and any other applicable Federal law.

§ 1309.23 Insurance, bonding and maintenance.

(a) At the time of acquiring a facility or receiving approval for the previous purchase of a facility, the grantee shall obtain insurance coverage for the facility which is of the same type as the coverage it has obtained for other real property it owns, which includes student liability insurance and which at least meets the requirements of the coverage specified in paragraphs (a)(1) and (2) of this section as follows:

(1) A title insurance policy which insures the fee interest in the facility for an amount not less than the full appraised value as approved by ACF, or the amount of the purchase price, whichever is greater, and which contains an endorsement identifying ACF as a loss payee to be reimbursed if the title fails. If no endorsement naming ACF as loss payee is made, the grantee is required to pay ACF the title insurance proceeds it receives in the event of title failure; and

(2) A physical destruction insurance policy, including flood insurance where appropriate, which insures the full replacement value of the facility from risk of partial and total physical destruction. The insurance policy is to be maintained for the period of time the facility is owned by the grantee.

(b) The grantee shall submit copies of such insurance policies to ACF within five days of acquiring the facility or receiving approval for the previous purchase of a facility. If the grantee has not received the policies in time to submit copies within this period, it shall submit evidence that it has obtained the appropriate insurance

policies within five days of acquiring the facility or receiving approval for the previous purchase of a facility, and it shall submit copies of the policies within five days of its receipt of them.

(c) The grantee must maintain facilities acquired with grant funds in a manner consistent with the purposes for which the funds were provided and in compliance with State and local government property standards and building codes.

Subpart D—Modular Units

§ 1309.30 General.

In addition to the special requirements of §§ 1309.31-1309.34 of this part, the proposed purchase or request for approval of a previous purchase of a modular unit is subject to all of the requirements of this part with the following exceptions:

(a) Section 1309.10(j) of this part, which requires a certification by a licensed engineer or architect of the structural soundness of a facility prior to approval of an application for grant funds, is replaced by § 1309.33; and

(b) Section 1309.21(d) of this part does not apply to the proposed purchase of modular units if the land on which the unit is installed is not owned by the grantee.

§ 1309.31 Site description.

(a) An application for the purchase or approval of a previous purchase of a modular unit must state specifically where the modular unit will be installed, and whether the land on which the modular unit will be installed will be purchased by the grantee. If the grantee does not propose to purchase land on which to install the modular unit or if the previously purchased modular unit is located on land not owned by the grantee, the application must state who owns the land on which the modular unit is or will be situated and describe the easement, right-of-way or land rental it will obtain or has obtained to allow it sufficient access to the modular unit.

(b) Modular units which are purchased with grant funds and which are not permanently affixed to land, or which are affixed to land which is not owned by the grantee, must have posted in a conspicuous place the following notice: ''On (date), the Department of Health and Human Services (DHHS) awarded (grant number) to (Name of grantee). The grant provided Federal funds for conduct of a Head Start program, including purchase of this modular unit. The grant incorporated conditions which included restrictions on the use and disposition of this property, and provided for a continuing Federal interest in the property. Specifically, the property may not be used for any purpose other than the purpose for which the facility was funded, without the express written approval of the responsible DHHS official, or sold or transferred to another party without the written permission of the responsible DHHS official. These conditions are in accordance with the statutory provisions set forth in 42 U.S.C. 9839; the regulatory provisions set forth in 45 CFR part 1309, 45 CFR part 74 and 45 CFR part 92; and Administration for Children and Families' grants policy.''

(c) A modular unit which has been approved for purchase and installation in one location may not be moved to another location without the written permission of the responsible HHS official.

§ 1309.32 Statement of procurement procedure for modular units.

(a) An application for the purchase of a modular unit must include a statement describing the procedures which will be used by the grantee to purchase the modular unit.

(b) This statement must include a copy of the specifications for the unit which is proposed to be purchased and assurance that the grantee will comply with procurement procedures in 45 CFR parts 74 and 92, including assurance that all transactions will be conducted in a manner to provide, to the maximum extent practical, open and free competition. A grantee requesting approval of a previous purchase of a modular unit also must include a copy of the specifications for its unit.

§ 1309.33 Inspection.

A grantee which purchases a modular unit with grant funds or receives approval of a previous purchase must have the modular unit inspected by a licensed engineer or architect within 15 calendar days of its installation or approval of a previous purchase, and must submit to the responsible HHS official the engineer's or architect's inspection report within 30 calendar days of the inspection.

§ 1309.34 Costs of installation of modular unit.

Consistent with the cost principles referred to in 45 CFR part 74 and 45 CFR part 92, all reasonable costs necessary to the installation of a modular unit the purchase of which has been approved by the responsible HHS official are payable with grant funds. Such costs include, but are not limited to, payments for public utility hook-ups, site surveys and soil investigations.

Subpart E—Other Administrative Provisions

§ 1309.40 Copies of documents.

Certified copies of the deed, loan instrument, mortgage, and any other legal documents related to the purchase of the facility or to the discharge of any debt secured by the facility must be submitted to the responsible HHS official within ten days of their execution.

§ 1309.41 Record retention.

All records pertinent to the purchase of a facility must be retained by the grantee for a period equal to the period of the grantee's ownership of the facility plus three years.

§ 1309.42 Audit of mortgage.

Any audit of a grantee which has purchased a facility with grant funds shall include an audit of any mortgage or encumbrance on the facility. Reasonable and necessary fees for this audit are payable with grant funds.

§ 1309.43 Use of grant funds to pay fees.

Consistent with the cost principles referred to in 45 CFR part 74 and 45 CFR part 92, reasonable fees and costs associated with and necessary to the purchase of a facility (including reasonable and necessary fees and costs incurred prior to the submission of an application under § 1309.10 of this part or prior to the purchase of the facility) are payable with grant funds, but require prior, written approval of the responsible HHS official.

§ 1309.44 Independent analysis.

(a) The responsible HHS official may direct the grantee applying for funds to purchase a facility to obtain an independent analysis of the cost comparison submitted by the grantee pursuant to § 1309.11 of this part, or the statement under § 1309.10(g) of this part, or both, if, in the judgment of the official, such an analysis is necessary to adequately review a proposal submitted under this part.

(b) The analysis shall be in writing and shall be made by a qualified, disinterested real estate professional in the community in which the property proposed to be purchased is situated.

(c) Section 1309.43 of this part applies to payment of the cost of the analysis.

[FR Doc. 99–2860 Filed 2–5–99; 8:45 am]

BILLING CODE 4184–01–P

FEDERAL COMMUNICATIONS COMMISSION

47 CFR Part 0

[FCC 98–136]

Rules To Reflect the Elimination of the Competition Division

AGENCY: Federal Communications Commission.

ACTION: Final rule.

SUMMARY: This document amends the Commission's rules to reflect: the elimination of the Competition Division within the Office of General Counsel; changes in the functions of the Office of General Counsel and Office of Plans and Policy; and a delegation of authority to the Common Carrier Bureau to act on applications for determinations of exempt telecommunications company status.

EFFECTIVE DATE: February 8, 1999.

FOR FURTHER INFORMATION CONTACT: Rebecca Dorch, Office of Engineering and Technology, (202) 418–1868.

SUPPLEMENTARY INFORMATION:

1. Through this *Order*, FCC 98–136, adopted June 23, 1998, and released June 29, 1998, the Commission eliminates the Competition Division of the Office of General Counsel. We conclude that this action, and reassignment of the personnel involved, will make more effective and efficient use of the Commission's scarce resources.

2. The implementation of this decision requires amendment of part 0 of the Commission's rules and regulations. This *Order* makes the necessary revisions and other minor editorial changes in part 0 of the Commission's rules. To ensure continuity in the dispatch of the duties and functions performed by the Competition Division, certain responsibilities and delegations of authority are being reassigned. In particular, 47 CFR 0.21 and 0.41 are amended by revising the duties and responsibilities of the Office of General Counsel by eliminating paragraph (g) of section 0.41 and by transferring from the Office of General Counsel to the Office of Plans and Policy the responsibility to help ensure that FCC policy encourages and promotes competitive market structures by providing bureaus and offices with the necessary support to identify, evaluate, and effectively and consistently resolve competitiveness issues.

3. The General Counsel currently has delegated authority, pursuant to 47 CFR 0.251(g), to act upon any application for a determination of exempt telecommunications company status filed pursuant to section 34(a)(1) of the Public Utility Holding Company Act of 1935, as amended by section 103 of the Telecommunications Act of 1996. *See Amendment of Part 0 of the Commission's Rules to Delegate Authority to the General Counsel to Act Upon Applications for Determination of Exempt Telecommunications Company Status,* 11 FCC Rcd 22166 (1996) 61 FR 26464, May 28, 1996. The Commission has concluded that the effective and efficient dispatch of these duties and responsibilities is best ensured by delegating such authority to the Common Carrier Bureau.

4. The amendments adopted herein pertain to agency organization. The notice and comment and effective date provisions of the Administrative Procedure Act, 5 U.S.C. 553, are therefore inapplicable. Authority for the amendments adopted herein is contained in Sections 4(i), 5(b) and 5(c) of the Communications Act of 1934, as amended, 47 U.S.C. 154(i), 155(b) and 155(c).

5. Accordingly, it is ordered, pursuant to authority delegated by Commission Order, FCC 98–136, released June 29, 1998, and effective upon publication in the **Federal Register**, that part 0 of the Commission's rules and regulations is amended as set forth in the rule changes.

List of Subjects in 47 CFR Part 0

Organization and functions (government agencies).

Federal Communications Commission.

Magalie Roman Salas,

Secretary.

Rule Changes

For the reasons discussed in the preamble, the Federal Communications Commission amends 47 CFR part 0 as follows:

PART 0—COMMISSION ORGANIZATION

1. The authority citation for part 0 continues to read as follows:

Authority: Secs. 5, 48 Stat. 1068, as amended; 47 U.S.C. 155.

2. Section 0.21 is amended by adding a new paragraph (j) to read as follows:

§ 0.21 Functions of the Office.

* * * * *

(j) To help ensure that FCC policy encourages and promotes competitive market structures by providing bureaus and offices with the necessary support to identify, evaluate, and effectively and consistently resolve competitiveness issues.

§ 0.41 [Amended]

3. Section 0.41 is amended by removing paragraph (g) and redesignating paragraphs (h) through (o) as (g) through (n).

§ 0.251 [Amended]

4. Section 0.251 is amended by removing paragraph (g) and redesignating paragraphs (h) and (i) as (g) and (h).

5. Section 0.304 is added to read as follows:

§ 0.304 Authority for determinations of exempt telecommunications company status.

Authority is delegated to the Chief, Common Carrier Bureau to act upon any application for a determination of exempt telecommunications company status filed pursuant to section 34(a)(1) of the Public Utility Holding Company Act of 1935, as amended by section 103 of the Telecommunications Act of 1996.

[FR Doc. 99–2864 Filed 2–5–99; 8:45 am]

BILLING CODE 6712–01–P

FEDERAL COMMUNICATIONS COMMISSION

47 CFR Parts 11 and 76

[FO Docket No. 91–171, 91–301; FCC 98–329]

Emergency Alert System

AGENCY: Federal Communications Commission.

ACTION: Termination of rulemaking.

SUMMARY: In this *Third Report and Order* the FCC determined that cable systems should not be required to install channel override equipment in order to prevent EAS messages from appearing on specific channels on a cable system. In the *Second Further Notice and Proposed Rule Making* 63 FR 29660, June 1, 1998, the Commission requested comment regarding the effectiveness of proposed rule amendments that would require cable systems to purchase and install equipment to prevent EAS messages from overriding broadcast stations programming carried on a cable system. Commission rules allow broadcast stations and cable system operators to enter into voluntary written agreements that prevent broadcast program interruption. After review of the record it was determined that the Commission should not mandate rules to require broadcast channel overrides.

FOR FURTHER INFORMATION CONTACT: Frank Lucia, Compliance and Information Bureau, (202) 418–1220.

SUPPLEMENTARY INFORMATION: This is a synopsis of the Commission's *Third Report and Order* in FO Dockets 91–171/91–301, adopted December 14, 1998, and released December 23, 1998.

The full text of this Federal Communications Commission's (FCC) *Third Report and Order* is available for inspection and copying during normal business hours in the FCC's Public Reference Center (Room 239), 1919 M Street, N.W., Washington, D.C. 20554. The complete text may also be purchased from the Commission's duplication contractor, International Transcription Service, Inc., 1231 20th Street, NW, Washington, D.C. 20336; phone: (202) 857–3800, facsimile: (202) 857–3805.

Synopsis of Third Report and Order

The FCC adopted a *Third Report and Order* which declined to mandate rules that require the installation of selective channel switching equipment at cable systems. This equipment prevents program interruption on broadcast channels carried on cable systems during cable initiated EAS activations. The FCC has not changed or amended the rules that provide for cable and broadcast stations entering into voluntary written agreements that prevent EAS interruption to a broadcast station. Finally, the *Third Report and Order* also rejected arguments to preempt provisions of local franchise agreements that require local emergency messages. The record indicates that many local municipalities use cable franchise agreements as a primary means of alerting residents to non-weather related local emergencies.

Background

EAS replaced the Emergency Broadcast System (EBS), and uses various communications technologies, such as broadcast stations and cable systems, to alert the public regarding national, state and local emergencies. EAS, compared to EBS, includes more sources capable of alerting the public and specifies new equipment standards and procedures to improve alerting capabilities.

In 1994 the Commission issued a *Report and Order and Further Notice of Proposed Rulemaking* 59 FR 67090, December 28, 1994. This proceeding directed broadcast stations and cable system participation in EAS. In our *Memorandum Opinion and Order,* 10 FCC Rcd 11494 (1995), we responded to petitions for reconsideration filed regarding the *Report and Order and Further Notice of Proposed Rulemaking.* We found no merit in arguments asserting that the statutory language exempts local broadcast station programming from interruption by cable system EAS requirements. The *Memorandum Opinion and Order* also rejected NAB's arguments that EAS interruptions violate provisions set forth in the Copyright Act and the Commissions must carry rules.

The *Second Report and Order,* which was released in September of 1997, modified some of the requirements in the *Report and Order* and addressed issues raised in the *FNPRM* that applied to wired and wireless cable systems. The *Second Report and Order* also declined to exercise preemption of local cable franchise agreements unless a jurisdiction takes action that interferes with the national warning functions of EAS.

Legal Basis

Authority for issuance of this Third Report and Order is contained in Sections 4(i), 257, 303(b), 303(g), 303(r), 309(j), and 332(a) of the Communications Act of 1934, as amended, 47 U.S.C. §§ 154(i), 257, 303(b), 303(g), 303(r), 309(j), and 332(a).

List of Subjects

47 CFR Part 11

Emergency alert system.

47 CFR Part 76

Cable television.

Federal Communications Commission.

Magalie Roman Salas,

Secretary.

[FR Doc. 99–2863 Filed 2–5–99; 8:45 am]

BILLING CODE 6712–01–P

FEDERAL COMMUNICATIONS COMMISSION

47 CFR Part 100

[MM Docket 93–25; FCC 98–307]

Direct Broadcast Satellite Public Interest Obligations

AGENCY: Federal Communications Commission.

ACTION: Final rule.

SUMMARY: In this document, the Commission imposes requirements on Direct Broadcast Satellite Service (DBS) providers to comply with the political broadcast rules of the Communications Act of 1934, as amended, and mandates that DBS providers reserve between 4 percent and 7 percent of their channel capacity exclusively for ''noncommercial programming of an educational or informational nature.'' These rules will provide for the carriage on DBS systems of qualified political candidates for national office and will make DBS channel capacity available to ''national educational programming suppliers,'' upon reasonable prices, terms, and conditions.

DATES: Effective June 15, 1999 except for § 100.5(c)(6) which contains information collection requirements that are not effective until approved by the Office of Management and Budget. The FCC will publish a document in the **Federal Register** announcing the effective date for that section. Written Comments regarding the Paperwork Reduction Act requirements in § 100.5(c)(6) should be submitted on or before April 9, 1999.

ADDRESSES: Comments regarding the paperwork reduction act requirements in § 100.5(c)(6) should be submitted to Les Smith at 445 12th Street S.W., Rm. 1–A804, Washington D.C. 20554 or via internet at lesmith@fcc.gov; phone 202–418–0217.

FOR FURTHER INFORMATION CONTACT: For more information regarding the *Report and Order* contact Rosalee Chiara (202) 418–0754 or James Taylor (202) 418–2113 of the International Bureau. For more information regarding the information collections and to submit comments, contact Les Smith at 202–418–0217; 445 12th Street S.W., Rm. 1–A804, Washington D.C. 20554 or via internet at lesmith@fcc.gov, and Timothy Fain, OMB Desk Officer, Rm. 10236 NEOB, 725 17th Street, N.W., Washington, D.C. 20503 or fain__t@al.eop.gov.

SUPPLEMENTARY INFORMATION: This is a summary of the Commission's *Report and Order* in MM Docket No. 93–25; FCC 98–307, adopted November 19, 1998 and released on November 25, 1998. The complete text of this *Report and Order* is available for inspection and copying during normal business hours in the FCC Reference Center (Room), 445 12th Street, S.W. Washington, D.C. 20554, and also may be purchased from the Commission's copy contractor, International Transcription Service, Inc., 1231 20th Street, N.W., Washington, DC 20036, telephone: 202–857–3800, facsimile: 202–857–3805.

Summary of Report and Order

1. On March 2, 1993 the Commission released a Notice of Proposed Rulemaking to implement Section 25 of the 1992 Cable Television Consumer Protection and Competition Act of 1992

(''1992 Cable Act'').[1] Specifically, Section 25 of the 1992 Cable Act, which added new Section 335 to the Communications Act of 1934, as amended, (the Act) required the Commission to impose on providers of Direct Broadcast Satellite Service (DBS), the political programming requirements of Sections 312(a)(7) and 315 of the Act and adopt rules requiring the set aside of channels for noncommercial educational and informational programming. In addition, Section 25 also directed the Commission to examine the opportunities for localism.

2. On September 16, 1993 the United States District Court for the District of Columbia held that Section 25 of the 1992 Cable Act was unconstitutional.[2] On August 30, 1996, the United States Court of Appeals for the District of Columbia Circuit reversed the District Court.[3] In light of the interval between the original Notice of Proposed Rulemaking and the appellate court decision, the Commission released a Public Notice on January 31, 1997 seeking to update and refresh the record.[4] Following review of the comments provided, the Commission released the Report and Order summarized here.

3. *Entities responsible for complying with DBS public interest obligations.* The Commission will hold part 100 and part 25 DBS licensees ultimately responsible for compliance with these rules. Licensees will, however, be able to demonstrate compliance with the public service obligations by relying on certifications from distributors that expressly state that they have complied with the public service obligations. Satellites licensed under Part 25, but operating in the C-band, are not covered by these rules because the statute specifies only Ku-band licensees. In the case of Part 25 licensees, the Commission has imposed a threshold for inclusion under the rules that requires an entity control at least enough programming channels so that 4 percent of the total programming channels available for video yields a set-aside of at least one noncommercial, educational or informational programming channel.

4. *Application of public service obligations to foreign satellites entering the U.S. Market.* Section 25.137 of the Commission's rules requires that earth stations operating with non-U.S. licensed satellites be licensed by the Commission. As a condition of its license, the Commission will require the earth station licensee communicating with a non-U.S. licensed satellite to comply with Section 335 public interest rules.

5. *Application of the political broadcasting provisions of Section 335(a).* Section 335(a) of the Act states, among other things, that any regulations shall, at a minimum, impose the political broadcast rules of Sections 312 and 315 of the Act.

6. *Access for Federal Candidates.* Section 312(a)(7) of the Act requires broadcasters to allow legally qualified candidates for federal office reasonable access to their facilities. Access can be provided on a free or paid basis. Since the passage of Section 312(a)(7), the Commission's policy has generally been to defer to the reasonable, good faith judgment of licensees as to what constitutes ''reasonable access'' under the circumstances present in a particular case. Factors the Commission would consider in reviewing such a case include the number of candidates requesting time, the technical difficulties in satisfying the request, and the availability of reasonable alternatives.

7. The Commission will monitor DBS providers' performance in this area so that it can modify the Commission's rules if necessary and as experience dictates. The Commission will require DBS providers to maintain a file available to the public at the providers' headquarters containing requests for political advertising time and disposition of those requests. Where DBS providers carry the programming of a terrestrial broadcast television station, it is the responsibility of the terrestrial broadcaster and not the DBS provider to satisfy the political broadcasting requirements of Sections 312(a)(7).

8. *Equal Opportunities.* In conformance with statutory mandate, the Commission will apply the equal opportunities provisions of Section 315(a) of the Act, Section 73.1940 of the Commission's rules, and the policies delineated in prior Commission orders to DBS providers. DBS providers will be required to ensure, by contractual means or otherwise, that these rules are followed. If one legally qualified candidate is afforded access to a DBS system, all other candidates for the same office who make timely requests must be afforded that same opportunity.[5] To ensure that competing candidates will be able to ascertain what equal opportunities they are entitled to, we will require the DBS provider to maintain a political file similar to the one maintained by broadcasters.[6] The *Report and Order* retains the definitions of ''use'' and ''legally qualified candidate'' in current rules and policies. The Commission will resolve issues involving DBS providers' equal opportunities obligations in the context of particular cases.

9. *Lowest Unit Charge.* If advertising is sold on DBS systems, legally qualified candidates must be afforded the benefit of the lowest unit charge (LUC) during the pre-election periods prescribed by Section 315 of the Act. Section 315(b) of the Act and Section 73.1942 of the Commission's rules provide that broadcasters may not charge any legally qualified candidate more than the LUC for advertising on the station during certain periods preceding the election. Although DBS providers do not currently have commercial rates on which to base a LUC determination, they can set a reasonable rate, based on consideration of marketplace factors such as what other media charge to reach a similar audience if they sell time to candidates pursuant to Sections 312 or 315 of the Act or otherwise choose to do so. DBS providers, like broadcasters and cable operators, must disclose to candidates information about rates and discount privileges and give any discount privileges to candidates. A DBS provider may make time available without charge on a nondiscriminatory basis.

10. *Opportunities for Localism.* Section 335(a) also requires the Commission ''to examine the opportunities that the establishment of direct broadcast satellite service provides for the principle of localism under [the] Act, and the methods by which such principle may be served through technological and other developments in, or regulation of, such service.'' Although there have been significant technological developments in the DBS industry since the Commission first developed rules for DBS, and some DBS providers are providing limited local service, no DBS provider has the technical capability to provide local service to all markets in the country. If legal and technical issues regarding localized programming are resolved, the Commission may consider

[1] *In the Matter of Implementation of Section 25 of the Cable Television Consumer Protection and Competition Act of 1992,* Direct Broadcast Satellite Public Service Obligations, 8 FCC Rcd. 1589 (1993).

[2] *Daniels Cablevision, Inc.* v. *United States,* 835 F. Supp. 1 (D.D.C. 1993).

[3] *Time Warner Entertainment Co., L.P.* v. *FCC,* 93 F.3d 957 (D.C. Cir. 1996).

[4] Public Notice (No. 72078, rel. January 31, 1997).

[5] 47 CFR 73.1941(c) (a request must be made within one week of the day on which the first prior use giving rise to the right of equal opportunities occurred).

[6] See 47 CFR 73.1943 (requiring the licensee to keep and permit public inspection of a complete record of all requests for broadcast time made and a notation showing the disposition, charges, etc.).

requiring DBS providers to offer some amount of locally-oriented programming.

11. *Public Interest or Other Obligations.* The *Report and Order* does not impose upon the DBS industry additional programming requirements. The Commission found that DBS is a relatively new entrant attempting to compete with an established, financially stable cable industry. Although the DBS industry has grown significantly since 1992, it still claims just under eight million subscribers in contrast to cable's 64 million customers. Additional obligations on DBS providers might hinder the development of DBS as a viable competitor to cable. The Commission concluded that, although Section 335(a) provides ample authority to impose other public interest programming requirements upon DBS providers, it would not exercise its authority at this time. If it becomes evident that there is a need, the Commission will reconsider this conclusion.

12. *Carriage Obligations for Educational and Informational Programming.* The 1992 Cable Act requires the Commission to adopt rules requiring DBS providers to make available channel capacity for programming of an educational or informational nature. The Commission concluded that discrete channels should be reserved to fulfill the noncommercial reservation requirements of Section 335(b) to assure continuity, predictability and easier monitoring and enforcement. Requiring the set aside of discrete channels will make it easier for consumers to locate such programming on one or more particular channels.

13. *Determination of Total Channel Capacity.* For the purpose of applying Section 335(b), channel capacity should be based on the total channel capacity that is being, or could be, used to provide video programming. Barker and other informational guide channels will be included as available channels for determining the required set aside, as they are video channels supplied to the customers. In addition, unused channels that could be used to provide DBS service will be included in the set aside calculation. Channels used for audio or other non-video services will not be included.

14. Because advances in digital compression technology will continue to expand the number of programming channels that can be offered to customers in a given amount of spectrum and the number of available channels will change depending on the complexity of the type of programming transmitted, the total number of programming channels offered by a DBS licensee on all its satellites can vary on a weekly or even a daily basis. To address these fluctuations, each DBS licensee will have to calculate on a quarterly basis the number of channels available for video programming on all its satellites. Each DBS licensee will then use the average of these quarterly measurements during the year to ascertain the total number of channels for purposes of determining the number of reserved channels. DBS providers will be required to record these quarterly channel measurements and average calculations as well as their response to any capacity changes in logs kept at their main offices and available to the Commission and to the public.

15. *Reservation Percentage.* The Commission concluded that DBS providers will be required to reserve four percent of their channel capacity exclusively for noncommercial educational and informational programming. In the event that the four percent calculation creates any fraction of a channel, the DBS provider will round the calculation upward.[7] The public interest programming provided for in this order must be made available to all of a DBS provider's subscribers without additional charge.

16. *Impact on Existing Programming Contracts.* The Commission concluded that the reservation requirement applies notwithstanding existing programming contracts and DBS providers will have to make available sufficient channel capacity to fulfill the reservation requirement, regardless of existing programming contracts.

17. *National Educational Programming Supplier.* Pursuant to Section 335(b)(3), DBS providers must make the reserved channels available to ''national educational programming suppliers'' upon certain terms. Section 335(b)(5)(B) provides that the term national educational programming supplier ''includes any qualified noncommercial educational television station, other public telecommunications entities, and public or private educational institutions.'' Neither this section of the statute nor the legislative history define ''noncommercial educational broadcast station,'' ''public broadcasting entity'' or ''public telecommunications entity.'' In the absence of any other Congressional guidance the Commission looked to other provisions of the Act in which those terms are defined such as Section 397 of the Act.

18. Section 397(6) of the Act defines a ''noncommercial educational broadcast station'' as a television or radio broadcast station that (i) ''is eligible to be licensed by the Commission as a noncommercial educational radio or television broadcast station and which is owned and operated by a public agency or nonprofit private foundation, corporation, or association,'' or (ii) ''is owned and operated by a municipality and which transmits only noncommercial programs for educational purposes.'' The Commission found it appropriate to use the definition of noncommercial educational television station and public telecommunication entity used in the noncommercial broadcast context and noted that Section 615(1) of the Act further defines such a station to include any television broadcast station that has as its licensee an entity eligible to receive a community service grant from the Corporation for Public Broadcasting.

19. Section 397(12) of the Act defines ''public telecommunications entity'' as any enterprise which (i) ''is a public broadcast station or a noncommercial telecommunications entity'' and (ii) ''disseminates public telecommunications services to the public.'' A ''noncommercial telecommunications entity'' is defined as ''any enterprise which is owned and operated by a state, a political or special purpose subdivision of a state, a public agency, or a nonprofit private foundation, corporation or association, and has been organized primarily for the purpose of disseminating audio or video noncommercial educational and cultural programs to the public by means other than a primary television or radio broadcast station.''[8] These entities are required to disseminate ''public telecommunications services,'' which are defined as noncommercial educational and cultural radio and television programs, and related noncommercial instructional or informational material.[9]

20. Section 397 of the Act does not define the term ''public or private educational institutions.'' The Commission looked elsewhere for guidance in defining that term including incorporating the eligibility criteria established by the rules for instructional

[7] For example, if a DBS provider supplies 120 video channels to customers, the provider will have to reserve initially five channels for noncommercial programming of an educational or informational nature. Four percent of 120 channels amounts to 4.8 channels. Under the rule this figure would be rounded up to 5 channels.

[8] 47 U.S.C. 397(7). The means of dissemination include, but are not limited to, coaxial cable, optical fiber, broadcast translators, cassettes, discs, microwave, or laser transmission through the atmosphere.

[9] 47 U.S.C. 397(14).

television fixed stations (''ITFS'') contained in Section 74.932 of the Commission's rules because the types of services provided by educational institutions and ITFS are analogous.[10] Section 74.932(a) provides that a license for an ITFS will be issued only to an accredited institution or to a governmental organization engaged in the formal education of enrolled students or to a nonprofit organization whose purposes are educational and include providing educational and instructional television material to such accredited institutions and governmental organizations. The Commission adopted the ITFS criteria in interpreting ''public and private educational institutions.''

21. *Additional Entities.* The Commission determined that the list of entities in Section 335(b)(5)(B) was not intended to be an exclusive list of entities that can qualify as national educational programming suppliers but a nonexclusive list that may be enlarged upon. Although the Commission did not interpret Section 335(b)(5)(B) as an exclusive list of eligible program suppliers, the Commission found that Congress intended to limit eligibility to entities that share the same essential characteristics as those listed.

22. *The Report and Order* states that the term ''national educational programming supplier'' in Section 335(b)(5)(B) includes only noncommercial entities with an educational mission. The term should not be interpreted as including ''commercial'' entities organized for profit-making purposes. The Commission found that the eligibility of a programming supplier under the statute should depend on its noncommercial character, not merely whether its programming contains commercials.

23. The Commission also found that the tax code definition of non-profit will apply to qualify an entity as an eligible national educational programming supplier.[11] Thus, an entity with an educational mission that is organized under the tax code as a nonprofit corporation will be eligible as a national educational programming supplier. An entity that is not organized as a nonprofit corporation may also qualify if it shows to the Commission's satisfaction that it is organized for a noncommercial purpose and has an educational mission. The *Report and Order* permits joint ventures as long as participants demonstrate that the joint venture is noncommercial within the meaning of Section 335 and that the venture's mission is educational.

24. *Definition of the Term ''National''.* The Commission interpreted the term ''national'' broadly so as to include local, regional, or national domestic nonprofit entities that qualify under the definitions listed above and produce noncommercial programming designed for a national audience. The Commission also found that the definition should include international nonprofit programmers that satisfy the terms of the definitions in Section 397 of the Act and the Commission's ITFS rules.

25. *Noncommercial Programming of an Educational or Informational Nature.* Section 335(b)(1) requires that the reserved channels be used ''exclusively for noncommercial programming of an educational or informational nature.'' The Commission concluded that the rules need not elaborate on the term ''educational and informational'' programming and that a DBS provider can comply with the reservation requirement by affording access to programming supplied by specific categories of noncommercial entities. The Commission will reconsider this conclusion, however, if it appears that more specific guidance on the definition of this term is necessary.

26. *Implementation of Section 335(b)(3); Editorial Control.* Section 335(b)(3) requires DBS providers to make channel capacity available to national educational programming suppliers but prohibits the DBS provider from exercising any editorial control over any video programming provided on the reserved channels. The Commission concluded that the best reading of the editorial control language is that it prohibits DBS providers from controlling the selection of, or in any way editing or censoring, individual programs that will be carried on the reserved channels. The *Report and Order* does not, however, prohibit DBS operators from selecting among national educational programming suppliers so long as the DBS provider does not refuse to make unused reserved capacity available to qualified suppliers. Nor does it prohibit DBS providers from refusing to carry non-qualifying programming or ineligible programmers.

27. The Commission rejected arguments that the interpretation of Section 335 is constrained by similar language in the cable leased access provision. Section 335 only prohibits DBS providers from exercising ''editorial control over programming,'' while the cable leased access provision, Section 612, also prohibits cable operators from ''in any other way consider[ing] the content of such programming.'' The Commission found that omission of this last clause from the DBS provision suggests that DBS providers are not necessarily barred from considering certain factors relating to programming in selecting programmers, but are prohibited from exercising control over such programming. Thus, DBS providers might consider a variety of factors in deciding which programmers to select, including the broad genres of programming they plan to provide (*e.g.*, cultural, documentary, children's educational), the programmers' experience, reliability, and reputation for quality programming, and the quality of programming they may have produced in the past. They may not, however, require the programmers they select to include particular series or programs on their channels as a condition of carriage. If in the future, it appears that DBS operators seek to use the selection process as a means of improperly influencing programming provided on the reserved channels, the Commission will take appropriate action.

28. The *Report and Order* does not prohibit the operators from electing to use a consortium or clearinghouse of educators and public interest specialists to choose among qualifying programs that would be aired on the set-aside capacity. With regard to qualifications, the *Report and Order* recognizes that someone must make the determination that programmers who wish to use the reserved channels are eligible under the statute to do so and that the programming carried on the reserved channels qualifies under the statute as noncommercial programming of an educational or informational nature. The Commission found that DBS providers should be responsible for ensuring that the obligations imposed by the statute are fulfilled. In order to avoid undue intrusion into the programming decisions of qualified programmers, however, the Commission does not believe that it would be appropriate for DBS providers to pre-screen all programming carried on the reserved channels. Rather, if an abuse of the reserved channels by a particular programmer comes to the DBS provider's attention, it can then take action to ensure that only qualified programs are carried on the reserved channels by that programmer in the future.

29. DBS providers may not alter or censor the content of the programming or otherwise exercise any control over the programming. To aid in monitoring and enforcing the obligations of DBS

[10] 47 CFR 74.932(a). ITFS are intended primarily to provide formal educational or cultural development to students enrolled in accredited public or private institutions or colleges or universities.

[11] 26 U.S.C. 501(c)(3).

providers, we will require them to maintain files available for public inspection concerning use of the reserved capacity. These files should identify the entities that request access, the entities to whom noncommercial capacity is being provided, the amount of capacity being provided to each entity, the conditions under which it is being provided and the rates, if any, being paid by the entity, and, when access is denied, a brief description of the reason or reasons why access was denied.

30. *Non-commercial channel limitation.* In order to ensure that access to non-commercial channels is not dominated by a few national educational program suppliers, the *Report and Order* limits to one the number of channels that can be initially allocated to a single qualified program provider on each DBS system. The Commission found this will make a greater variety of educational and informational programs available to the U.S. viewing public and will provide an opportunity for carriage of programming that might not otherwise be shown.

31. In order to ensure that a particular programmer will be allowed access to only one channel, the Commission will require that individual programmers be separate entities. If two national educational programming suppliers are directly or indirectly under common control or ownership, the will be treated as one entity for purposes of obtaining access to the reserved channels. In applying this provision, the Commission will define cognizable ownership and other interests according to the Commission's broadcast attribution rules.[12] Those rules seek to identify those interests in, or relationships with, an entity that confer on their holders a degree of influence or control such that the holders have a realistic potential to affect the programming decisions of the entity or other core operating functions. If, after all qualified entities that have sought access have been offered access on at least one channel, a provider may allocate an additional channel to a qualified programmer without having to make additional efforts to secure other qualified programmers.

32. *Liability for Violations.* Because Section 335 prohibits DBS providers from exercising any editorial control over programming utilizing the reserved channels, the Commission interpreted the statute in accordance with the Supreme Court's holding in *Farmers Educational and Cooperative Union of America* v. *WDAY,*[13] as immunizing the DBS providers from liability under state and local laws as a result of the content of the programming. Section 335(b) prohibits DBS providers from exercising ''any editorial control'' over noncommercial programming using the set-aside capacity, and thus implicitly grants them immunity from liability under state and local law for distributing such programming. By the same token, the Commission will enforce any requirements imposed by the Act or our rules, other than these public interest obligations, against the programmers who supply such programming, rather than the DBS providers who carry it under Section 335.

33. *Applicability of Political Broadcasting Rules to the Noncommercial Set Aside Capacity.* The statutory language makes clear that noncommercial programming suppliers are not considered DBS providers for purpose of either Section 335(a) or Section 335(b) and are not subject to those requirements.

34. *Refusal to Carry Programming Supplier.* Section 335 does not appear to allow DBS operators to refuse to carry any particular program. This does not, however, mean that a DBS provider is prevented from making an initial threshold determination as to whether a programmer is qualified for carriage or whether the programming proposed is noncommercial, educational, or informational. The Commission found this approach consistent with judicial interpretation of the editorial control prohibition for public, educational, and governmental set-aside channels provided by cable operators. In addition, a DBS provider can set technical quality standards for programming carried on its satellite system and these standards can be applied to programming on the set-aside channels.

35. *Unused Channel Capacity.* Section 335(b)(2) of the Communications Act permits a DBS provider to utilize for any purpose any unused channel capacity required to be reserved under this subsection pending the actual use of such channel capacity for noncommercial programming of an educational or informational nature. A DBS provider will however, be required to vacate reserved capacity, regardless of contractual obligations, within a reasonable time after a qualified programmer's request for access has been received.

36. *Reasonable Prices, Terms, and Conditions.* The Commission concluded that costs that can be specifically allocated to noncommercial programmers are those that are directly related to making the capacity available to noncommercial programmers. These include, incremental labor required for traffic management at the uplink facility, incremental compression equipment, incremental labor required to authorize viewers to receive particular programming, and any backhaul costs actually incurred by the DBS provider in order to transmit the noncommercial educational or informational programming. If a DBS provider has an authorization center or procedure used solely for the provision of noncommercial channels, such costs may be allocated to noncommercial programmers as well.

37. With regard to rates that are appropriate for the set aside channels under Section 335(b), the statute gives certain guidelines for the Commission to apply. First, Section 335(b)(4) says the Commission should take into account the nonprofit character of the programmer and any federal funds used to support programming. Second, the statute provides that the Commission shall not allow rates to exceed 50 percent of the direct costs, which we have discussed above.

38. The Commission thinks that it should not be involved in setting rates for noncommercial programmers because the Commission does not set rates for satellite capacity in any other context. The Commission will address any disputes with respect to rates in the context of a complaint proceeding. Because the statute does not give the Commission any basis upon which to differentiate among noncommercial educational and informational programming based on the availability of outside financing, the Commission concluded that the 50 percent cap applies to all qualified programmers and not just those who receive no outside funding for their programs.

39. *Effective Date.* The Commission concluded that a long phase-in period is unnecessary. The Commission recognized, however, that DBS providers and programmers need some amount of time in which to solidify plans and execute contracts. The Commission will require each DBS provider make available the channel capacity for educational and informational programming of a noncommercial nature as soon as the rules become effective. DBS providers must open a window at that time to allow interested programming suppliers to enter into discussions with the DBS providers regarding program carriage. Programming intended to fulfill the

[12] 47 CFR 73.3555 note 1 & 2.

[13] 360 US 525 (1959) (*Farmers Union*).

provisions of this section must be made available to the public no later than six months after these rules are effective. Until the four percent of capacity is filled with qualified programming, DBS providers may not assert that capacity is unavailable if there are qualified entities seeking carriage who are ready to meet the prices, terms and conditions established by the DBS provider.

Ordering Clauses

40. Accordingly, *it is ordered* that Part 100 of the Commission's rules is hereby amended as set out.

41. *It is further ordered* that the Commission's Office of Managing Director *shall send* a copy of this *Report and Order,* including the Final Regulatory Flexibility Analysis, to the Chief Counsel for Advocacy of the Small Business Administration.

42. *It is further ordered* that the amendments to part 100 of the Commission's rules, 47 CFR part 100, and the Commission's policies, rules and requirements established in this *Report and Order* shall take effect 60 days after publication of the amendments in the **Federal Register**, or in accordance with the requirements of 5 U.S.C. 801(a)(3) and 44 U.S.C. 3507, whichever occurs later. The Commission will publish a notice announcing the effective date of this *Report and Order.*

43. *It is further ordered* that the Commission *shall send* a copy of this *Report and Order*, including the Final Regulatory Flexibility Analysis, to the Chief Counsel for Advocacy of the Small Business Administration.

44. This *Report and Order* is issued under § 0.261 of the Commission's rules, 47 CFR 0.261 (1996). Petitions for reconsideration under § 1.429 of the Commission's rules, 47 CFR 1.429 (1996), or applications for review under Section 1.115 of the Commission's rules, 47 CFR 1.115 (1996), may be filed within 30 days of the date of this *Report and Order* in the **Federal Register** (See 47 CFR 1.4(b)(1)).

Paperwork Reduction Act

The Federal Communications Commission, as part of its continuing effort to reduce paperwork burden invites the general public and other Federal agencies to take this opportunity to comment on the following information collection, as required by the Paperwork Reduction Act of 1995, Public Law 104–13. An agency may not conduct or sponsor a collection of information unless it displays a currently valid control number. No person shall be subject to any penalty for failing to comply with a collection of information subject to the Paperwork Reduction Act (PRA) that does not display a valid control number. Comments are requested concerning (a) whether the proposed collection of information is necessary for the proper performance of the functions of the Commission, including whether the information shall have practical utility; (b) the accuracy of the Commission's burden estimate; (c) ways to enhance the quality, utility, and clarify of the information collected; and (d) ways to minimize the burden of the collection of information on the respondents, including the use of automated collection techniques or other forms of information technology.

OMB Approval Number: New.

Title: Implementation of Section 25 of the Cable Television Consumer Protection and Competition Act of 1992, Direct Broadcast Satellite Public Interest Obligations.

Form No.: NA.

Type of Collection: New Collection.

Respondents: Business or other for-profit.

Number of Respondents: 8.

Estimated Time for Response: 12 hours.

Total Annual Burden: 96 hours.

Needs and Uses: The information will be used by the Federal Communications Commission (FCC) and interested members of the public to monitor DBS providers' compliance with public interest obligations. Without such information, the FCC could not determine whether DBS providers have complied with their obligations.

List of Subjects in 47 CFR Part 100

Satellite.

Federal Communications Commission.

Magalie Roman Salas,

Secretary.

Rule Changes

For the reasons discussed in the preamble, the Federal Communications Commission amends 47 CFR part 100 as follows:

PART 100—DIRECT BROADCAST SATELLITE SERVICE

1. The authority citation for part 100 is amended to read as follows:

Authority: 47 U.S.C. 154, 303, 335, 309 and 554.

2. Add § 100.5 to read as follows:

Subpart A—General Information

§ 100.5 Public interest obligations.

(a) DBS providers are subject to the public interest obligations set forth in paragraphs (b) and (c) of this section. For purposes of this rule, DBS providers are any of the following:

(1) Entities licensed pursuant to 47 CFR part 100; or

(2) Entities licensed pursuant to part 25 of this chapter that operate satellites in the Ku-band fixed satellite service and that sell or lease capacity to a video programming distributor that offers service directly to consumers providing a sufficient number of channels so that four percent of the total applicable programming channels yields a set-aside of at least one channel of non-commercial programming pursuant to paragraph (c) of this section, or

(3) Non-U.S. licensed satellite operators in the Ku-band that offer video programming directly to consumers in the United States pursuant to an earth station license issued under part 25 of this title and that offer in a sufficient number of channels to consumers so that four percent of the total applicable programming channels yields a set-aside of one channel of non-commercial programming pursuant to paragraph (c) of this section,

(b) *Political broadcasting requirements*—(1) *Reasonable access.* DBS providers must comply with § 312(a)(7) of the Communications Act of 1934, as amended, by allowing reasonable access to, or permitting purchase of reasonable amounts of time for, the use of their facilities by a legally qualified candidate for federal elective office on behalf of his or her candidacy.

(2) *Use of facilities.* DBS providers must comply with § 315 of the Communications Act of 1934, as amended, by providing equal opportunities to legally qualified candidates.

(c) *Carriage obligation for noncommercial programming*—(1) *Reservation requirement.* DBS providers shall reserve four percent of their channel capacity exclusively for use by qualified programmers for noncommercial programming of an educational or informational nature. Channel capacity shall be determined annually by calculating, based on measurements taken on a quarterly basis, the average number of channels available for video programming on all satellites licensed to the provider during the previous year. DBS providers may use this reserved capacity for any purpose until such time as it is used for noncommercial educational or informational programming.

(2) *Qualified programmer.* For purposes of these rules, a qualified programmer is:

(i) A noncommercial educational broadcast station as defined in § 397(6)

of the Communications Act of 1934, as amended,

(ii) A public telecommunications entity as defined in § 397(12) of the Communications Act of 1934, as amended,

(iii) An accredited nonprofit educational institution or a governmental organization engaged in the formal education of enrolled students (A publicly supported educational institution must be accredited by the appropriate state department of education; a privately controlled educational institution must be accredited by the appropriate state department of education or the recognized regional and national accrediting organizations.), or

(iv) A nonprofit organization whose purposes are educational and include providing educational and instructional television material to such accredited institutions and governmental organizations.

(v) Other noncommercial entities with an educational mission.

(3) *Editorial control.*

(i) A DBS operator will be required to make capacity available only to qualified programmers and may select among such programmers when demand exceeds the capacity of their reserved channels.

(ii) A DBS operator may not require the programmers it selects to include particular programming on its channels.

(iii) A DBS operator may not alter or censor the content of the programming provided by the qualified programmer using the channels reserved pursuant to this section.

(4) *Non-commercial channel limitation.* A DBS operator cannot initially select a qualified programmer to fill more than one of its reserved channels except that, after all qualified entities that have sought access have been offered access on at least one channel, a provider may allocate additional channels to qualified programmers without having to make additional efforts to secure other qualified programmers.

(5) *Rates, terms and conditions.* (i) In making the required reserved capacity available, DBS providers cannot charge rates that exceed costs that are directly related to making the capacity available to qualified programmers. Direct costs include only the cost of transmitting the signal to the uplink facility and uplinking the signal to the satellite.

(ii) Rates for capacity reserved under paragraph (c)(1) of this section shall not exceed 50 percent of the direct costs as defined in this section.

(iii) Nothing in this section shall be construed to prohibit DBS providers from negotiating rates with qualified programmers that are less than 50 percent of direct costs or from paying qualified programmers for the use of their programming.

(iv) DBS providers shall reserve discrete channels and offer these to qualifying programmers at consistent times to fulfill the reservation requirement described in these rules.

(6) *Public file.* (i) Each DBS provider shall keep and permit public inspection of a complete and orderly record of:

(A) Quarterly measurements of channel capacity and yearly average calculations on which it bases its four percent reservation, as well as its response to any capacity changes;

(B) A record of entities to whom noncommercial capacity is being provided, the amount of capacity being provided to each entity, the conditions under which it is being provided and the rates, if any, being paid by the entity;

(C) A record of entities that have requested capacity, disposition of those requests and reasons for the disposition; and

(D) A record of all requests for political advertising time and the disposition of those requests.

(ii) All records required by this paragraph shall be placed in a file available to the public as soon as possible and shall be retained for a period of two years.

(7) *Effective date.* DBS providers are required to make channel capacity available pursuant to paragraph (c) of this section upon the effective date. Programming provided pursuant to this rule must be available to the public no later than six months after the effective date.

* * * * * *

[FR Doc. 99–1346 Filed 2–5–99; 8:45 am]

BILLING CODE 6712–01–P

DEPARTMENT OF THE INTERIOR

Fish and Wildlife Service

50 CFR Part 17

RIN 1018–AC88

Endangered and Threatened Wildlife and Plants; Determination of Whether Designation of Critical Habitat for the Coastal California Gnatcatcher is Prudent

AGENCY: Fish and Wildlife Service, Interior.

ACTION: Notice of determination.

SUMMARY: We, the U.S. Fish and Wildlife Service, have reconsidered our prudency finding for designating critical habitat for the coastal California gnatcatcher (*Polioptila californica californica*). We listed the coastal California gnatcatcher as a threatened species under the Endangered Species Act of 1973, as amended (Act) on March 30, 1993. At that time, we determined that designation of critical habitat was not prudent because designation would not benefit the coastal California gnatcatcher and would increase the degree of threat to the species. On May 21, 1997, the United States Court of Appeals for the Ninth Circuit issued an opinion that required us to issue a new decision regarding the prudency of designating critical habitat for the coastal California gnatcatcher. This notice of determination responds to that court order.

DATES: We made the finding announced in this document on January 21, 1999.

ADDRESSES: The complete file for this prudency reconsideration is available for inspection, by appointment, during normal business hours at the U.S. Fish and Wildlife Service, Carlsbad Fish and Wildlife Office, 2730 Loker Avenue West, Carlsbad, California 92008.

FOR FURTHER INFORMATION CONTACT: Ken S. Berg, Field Supervisor, at the above address (telephone: 760/431–9440; facsimile 760/431–9624).

SUPPLEMENTARY INFORMATION:

Background

We listed the coastal California gnatcatcher (*Polioptila californica californica*) (gnatcatcher) as a threatened species under the Endangered Species Act of 1973, as amended (Act) (16 U.S.C. 1531 *et seq.*) on March 30, 1993 (58 FR 16742). This small, insectivorous songbird typically occurs in several distinctive subassociations of the coastal sage scrub plant community. Coastal sage scrub vegetation is composed of relatively low-growing, dry-season deciduous, and succulent plants. Characteristic plants of this community include coastal sagebrush (*Artemisia californica*), various species of sage (*Salvia* spp.), California buckwheat (*Eriogonum fasciculatum*), lemonadeberry (*Rhus integrifolia*), California encelia (*Encelia californica*), prickly pear and cholla cactus (*Opuntia* spp.), and various species of *Haplopappus*. The gnatcatcher exhibits a strong affinity to coastal sage scrub vegetation dominated by coastal sagebrush, although in some portions of its range (e.g., western Riverside County) other plant species may be more abundant. The species occurs below about 912 meters (m) (3,000 feet (ft)) in elevation. The species remains

threatened by habitat loss and fragmentation resulting from urban and agricultural development, and the synergistic effects of cowbird parasitism and predation (58 FR 16742).

The precarious status of the gnatcatcher and the importance of habitat protection are well known to the general public and to land planning agencies. We are working with Federal, State, and local agencies and private landowners throughout the historic range of the gnatcatcher to implement or develop conservation plans for this species and the large array of other listed or sensitive species also found in its coastal sage scrub habitats.

Critical Habitat

Critical habitat is defined in section 3 of the Act as—(i) the specific areas within the geographical area occupied by a species, at the time it is listed in accordance with the Act, on which are found those physical or biological features (I) essential to the conservation of the species and (II) that may require special management considerations or protection; and, (ii) specific areas outside the geographical area occupied by a species at the time it was listed, upon a determination that such areas are essential for the conservation of the species. ''Conservation'' means the use of all methods and procedures needed to bring the species to the point at which listing under the Act is no longer necessary.

Section 4(a)(3) of the Act, as amended, and its implementing regulations (50 CFR 424.12) require that, to the maximum extent prudent and determinable, the Secretary designate critical habitat at the time a species is determined to be endangered or threatened. According to our regulations (50 CFR 424.12(a)(1)), designation of critical habitat is not prudent when one or both of the following situations exist—(1) The species is threatened by taking or other human activity, and identification of critical habitat can be expected to increase the degree of threat to the species, or (2) such designation of critical habitat would not be beneficial to the species.

In general, critical habitat designation contributes to species conservation primarily by highlighting habitat areas in need of special management considerations or protection, and by describing the features within those areas that are essential to the conservation of the species. Critical habitat designation may provide additional protection under section 7 of the Act with regard to activities that are funded, authorized, or carried out by a Federal agency on either Federal or non-Federal land. Section 7(a)(2) of the Act requires Federal agencies, in consultation with us, to ensure that any action they carry out, fund, or authorize does not jeopardize the continued existence of a federally listed species or result in the destruction or adverse modification of designated critical habitat. This requirement of Federal agencies is the only mandatory legal consequence of a critical habitat designation. We refer to areas where a Federal agency may be involved as having a ''Federal nexus.''

Regulations in 50 CFR part 402 define ''jeopardize the continued existence of'' and ''destruction or adverse modification of'' in similar terms. To jeopardize the continued existence of a species means to engage in an action ''that reasonably would be expected to reduce appreciably the likelihood of both the survival and recovery of a listed species.'' Destruction or adverse modification of habitat means an ''alteration that appreciably diminishes the value of critical habitat for both the survival and recovery of a listed species.'' Common to both definitions is an appreciable detrimental effect on both the survival and recovery of a listed species. Thus, actions that would adversely modify critical habitat generally also jeopardize the continued existence of the species.

At the time of the listing, we concluded that designation of critical habitat for the gnatcatcher was not prudent because such designation would not benefit the species and would make the species more vulnerable to activities prohibited under section 9 of the Act. We were aware of several instances of apparently intentional habitat destruction that had occurred during the listing process. In addition, most land occupied by the gnatcatcher was in private ownership and a designation of critical habitat was not believed to be of benefit because of a lack of a Federal nexus.

On May 21, 1997, the United States Court of Appeals for the Ninth Circuit (Court), issued an opinion (No. 95–56075; D.C. No. CV–93–999–LHM) that required us to issue a new decision regarding the prudency of determining critical habitat for the gnatcatcher. In this opinion, the Court held that the ''increased threat'' criterion in the regulations may justify a not prudent finding only when we have weighed the benefits of designation against the risks of designation. Secondly, with respect to the ''not beneficial'' criterion explicit in the regulations, the Court ruled that our conclusion that designation of critical habitat was not prudent because it would fail to control the majority of land-use activities within critical habitat was inconsistent with Congressional intent that the imprudence exception to designation should apply ''only in rare circumstances.'' The Court noted that a substantial portion of gnatcatcher habitat would be subject to a future nexus sufficient to trigger section 7 consultation requirements regarding critical habitat. Third, the Court determined that our conclusion that designation of critical habitat would be less beneficial to the species than another type of protection (i.e., State of California Natural Community Conservation Planning efforts) did not absolve us from the requirement to designate critical habitat. The Court was also critical of our lack of specificity in our analysis.

Prudency Redetermination Process

We have reevaluated our previous not prudent finding regarding critical habitat designation for the gnatcatcher as instructed by the Court. Initially, we inventoried all lands within the known range of the gnatcatcher containing coastal sage scrub habitats. These lands included coastal and inland areas—(1) that may support sage scrub or similar habitat within San Diego, Orange, Los Angeles, Riverside, San Bernardino, and Ventura counties, California, and (2) that are below 912 m (3,000 ft) in elevation (the approximate maximum elevation occupied by gnatcatchers). Once we defined the study area, we categorized lands by ownership within each County using Geographic Information System (GIS) theme coverages, and estimated approximate acreages for each category. We used Federal and non-Federal (i.e., Tribal, local/State jurisdiction, and private) land ownership categories for the purposes of this prudency determination. We also considered the likelihood of a Federal nexus through land ownership, project funding or activity jurisdiction (Table 1).

We considered all Federal and Tribal trust lands to have a Federal nexus. Because of its Tribal trust responsibilities, the Bureau of Indian Affairs (BIA) represents the Federal nexus on Tribal trust lands; the BIA does not represent a Federal nexus on Tribal fee-owned land. We evaluated State, local government, and private lands that contain gnatcatcher habitat for a potential Federal nexus. We expect some projects on State, local government, or private lands in Orange, San Diego and Ventura counties to have a Federal nexus.

Table 1.—Geographic Distribution, Ownership, and Size of Areas Evaluated in the Critical Habitat Prudency Redetermination for the Coastal California Gnatcatcher

Land ownership and county	Total area within gnatcatcher study area hectares (acres)	Gnatcatcher habitat hectares (acres) [a]	Gnatcatcher habitat with federal nexus hectares (acres) [b]	Gnatcatcher habitat with a Federal nexus where critical habitat is determined to be prudent hectares (acres)
Federal:				
Los Angeles	186,004(459,625)	11,470(28,343)	11,470(28,343)	11,470(28,343)
Orange	26,948(66,590)	991(2,448)	991(2,448)	991(2,448)
Riverside	88,072(217,631)	5,616(13,877)	5,616(13,877)	5,616(13,877)
San Bernardino	22,890(56,562)	1,256(3,104)	1,256(3,104)	1,256(3,104)
San Diego	178,285(440,550)	24,650(60,911)	24,650(60,911)	24,650(60,911)
Ventura	77,287(190,980)	4,381(10,825)	4,381(10,825)	4,381(10,825)
Total Federal	579,486(1,431,938)	48,364(119,508)	48,364(119,508)	48,364(119,508)
Non-Federal:				
Los Angeles	466,149(1,151,873)	53,058(131,108)	54(133)	0
Orange	178,040(439,944)	23,572(58,247)	[d]8,428(20,826)	473(1,169)
Riverside	380,789(940,946)	62,248(153,817)	[d]750(1,854)	83(205)
San Bernardino	128,953(318,649)	15,697(38,789)	[c]0	0
San Diego	510,191(1,260,706)	673,684(167,250)	[d]32,627(80,622)	1,095(2,706)
Ventura	221,167(546,514)	79,070(195,385)	[d]243(600)	243(600)
Total Non-Federal	1,885,289(4,658,632)	301,328(744,596)	42,102(104,035)	1,894(4,680)
Grand Totals	2,464,775(6,090,570)	349,691(864,104)	90,465(223,543)	50,257(124,188)

[a]Total amount of coastal sage scrub habitats within designated category.
[b]Extent of habitat where a Federal nexus exists.
[c]There are no known proposed projects or likely future activities with an established Federal nexus on lands within category.
[d]See text for individual Federal project action areas contributing to totals; action areas in these categories may include small amounts of State and local lands.

Of the approximately 2,464,775 hectares (ha) (6,090,570 acres (ac)) of land within the study area, 77 percent is non-Federal land and 23 percent is Federal (Table 1). The GIS-based analysis of the study area landscape further revealed that only about 349,691 ha (864,104 ac) or 14 percent of these lands support sage scrub habitat, with the majority of the habitat occurring on privately or federally owned lands (Table 1). This estimate of habitat availability is more precise than our previous efforts and may differ with some published estimates.

We followed existing statutes and regulations, the Court order, and our policy, to identify those lands for which a designation of critical habitat might be prudent. In general, we carried out the analytical steps for determining prudency sequentially—(1) we determined whether Federal lands were involved, (2) if lands were non-Federal, we determined whether a Federal nexus existed, (3) we determined whether any threats associated with designation as critical habitat of Federal lands and those non-Federal lands having a Federal nexus outweigh the benefits of such designation, and (4) we determined whether any threats associated with designation of non-Federal lands that lack a Federal nexus outweigh the benefits of such designation.

The potential threats associated with designation include an increased likelihood of intentional acts of vandalism due to widespread public misunderstanding of critical habitat. The benefits of designating critical habitat include the section 7 consultation benefit and the benefit of highlighting areas needing special management considerations or protections. We describe several instances of vandalism and intentional destruction of endangered species habitat in the ''Prudency Finding'' section of this notice.

In addition to determining whether designation of an area as critical habitat is prudent, we must also evaluate, in accordance with section 3(5)(A) of the Act, whether the area is essential to the conservation of the species and whether the area may require special management considerations or protection before designating the area as critical habitat. Section 4(b)(2) of the Act requires us to evaluate economic and other impacts, and exclude any area from the designation if the benefits of excluding the area outweigh the benefits of including the area. However, we can not exclude an area if the exclusion would result in the extinction of the species. These additional evaluations required to designate critical habitat are not a part of the prudency determination ordered by the Court, and, for the most part, have been deferred consistent with the current listing priority guidance published on May 8, 1998 (63 FR 10931).

Prudency Finding

The only regulatory impact of a critical habitat designation is through the consultation provisions of section 7. Section 7 applies only to activities having a Federal nexus, not to activities that are exclusively State or private. Thus, the existence or lack of a Federal nexus is a key consideration in determining whether designating critical habitat is prudent. A Federal nexus exists when a Federal agency carries out, funds, or authorizes an activity or project on Federal or non-Federal lands. As we previously stated, the designation of non-Federal lands that lack a Federal nexus may not be prudent because the limited benefit may be outweighed by the threat of destruction of these areas. On the other hand, the designation of non-Federal lands where a Federal nexus exists or may exist in the future could prove to be beneficial to the species. However, even for non-Federal lands where there may be a future Federal nexus, we must weigh the benefits of designation as

critical habitat against any threat associated with designation. We discuss our prudency findings, arranged by land ownership, below.

Tribal Lands. Tribal lands include Tribal fee-owned and Tribal trust lands. Tribal fee-owned lands are treated as private lands and thus have no inherent Federal nexus. However, activities on such lands are subject to section 7 consultation if a Federal action is involved. Tribal trust lands have a Federal nexus in light of the trust responsibility of the BIA. However, given the extremely small proportion of coastal sage scrub habitat on Tribal lands (2 percent of the 349,691 ha (864,104 ac) of total existing habitat) (Table 1), and because no significant gnatcatcher populations are known to occur on Tribal lands, we conclude that such lands are not essential to the conservation of the species and do not meet the definition of critical habitat.

Federal Lands. Federal lands are generally those administered by the Department of Defense (DOD) (including the Army Corps of Engineers (COE), Department of Navy, Marine Corps, and Air Force), Bureau of Land Management (BLM), Federal Aviation Administration (FAA), Forest Service, National Park Service, Fish and Wildlife Service, and Bureau of Reclamation. For convenience, we included Tribal trust lands in the Federal lands category in Table 1 due to the inherent BIA nexus; however, for the reasons stated above in the discussion under ''Tribal Lands,'' we conclude that Tribal trust lands are not essential to the conservation of the species and do not meet the definition of critical habitat. Approximately 579,486 ha (1,431,938 ac) of land within the study area are in this Federal land category. Of this total, an estimated 48,363 ha (119,508 ac), or 8 percent, support sage scrub habitat (Table 1). We have determined that it is prudent to designate critical habitat for the gnatcatcher on all Federal lands (not including Tribal trust lands) containing coastal sage scrub within the defined study area. We will further evaluate these lands during our development of a proposed critical habitat rule. That evaluation may indicate that not all of such habitat is essential for the conservation of the species or requires special management. We may also exclude some of these areas from designation as critical habitat because of economic impacts of such designation.

Non-Federal Lands. Non-Federal lands include lands owned by local and State jurisdictions and private entities. This category includes Tribal fee-owned lands. A Federal nexus exists on non-Federal lands when there is Federal authorization or funding of, or participation in, a project or activity. In such cases, a Federal action agency is required to consult with us under section 7(a)(2) of the Act if the proposed activity or project may affect a listed species or any designated critical habitat.

Several types of activities on non-Federal lands supporting sage scrub habitat could potentially involve a Federal nexus. We have evaluated all habitat within the range of the gnatcatcher and all types of projects for a potential Federal nexus. For each Federal agency, we describe below the agency's potential involvement in activities on non-Federal lands and identify those areas for which designation of critical habitat is prudent.

- The BIA may provide funding, logistical support, and technical assistance to Indian Tribes for activities that may involve Tribal fee-owned lands. In some cases these actions require the BIA to consult with us pursuant to section 7 of the Act. However, for the reasons stated above in the discussion under ''Tribal Lands,'' we conclude that Tribal fee-owned lands, as well as Tribal trust lands, are not essential to the conservation of the species and do not meet the definition of critical habitat.
- The Federal Highway Administration (FHWA) provides funding for transportation projects and approves linkages with the Federal highway system. These activities require section 7 consultation. Two regional transportation plans identify potential transportation alignments and alternatives with potential FHWA involvement in southern California. The 1998 Regional Transportation Plan authored by the Southern California Association of Governments addresses Los Angeles, Orange, Riverside, San Bernardino, and Ventura counties, while the Regional Transportation Plan 1996–2020 authored by the San Diego Association of Governments covers San Diego County. We have identified several projects having a Federal nexus through FHWA involvement that may affect gnatcatcher habitat. In Orange County, the action area of the Foothill Transportation Corridor, which is under the jurisdiction of FWHA, contains 461 ha (1,140 ac) of coastal sage scrub, and the action area of the State Route 133/Laguna Canyon Road Realignment project, which is also under the jurisdiction of FHWA, contains approximately 12 ha (29 ac) of habitat. In San Diego County, State Route 125 Project contains about 42 ha (105 ac) of habitat; State Route 905 Project contains about 8 ha (20 ac); State Route 78 Project contains about 0.25 ha (0.65 ac) of habitat; and State Route 76 Project contains about 7 ha (17 ac). The Moorpark Specific Plan ι2/Highway 118 Extension Project, which is a Ventura County project under the jurisdiction of the FHWA, contains 243 ha (600 ac) of coastal sage scrub habitat. We conclude that designation of critical habitat in these areas is prudent.
- The Fish and Wildlife Service conducts internal section 7 consultations when our actions may affect a listed species. Our activities on non-Federal lands include issuance of permits for incidental take of listed species under section 10 of the Act. Because the decision to apply for an incidental take permit, thereby creating a Federal nexus for consultation, rests solely with the potential non-Federal permit applicant, we do not consider the section 10 permit process as providing a reliable future Federal nexus for activities on non-Federal lands.
- The COE and the Environmental Protection Agency (EPA) administer the Clean Water Act Section 404 permit program. Under Section 404 of the Clean Water Act, a Department of the Army permit is required for projects on non-Federal and Federal lands involving a discharge of dredged or fill material into waters of the United States, including wetlands. The COE and EPA do not generally have jurisdiction over upland areas where gnatcatchers are found unless upland development is dependent upon an activity requiring a Section 404 permit. For this reason, Section 404 of the Clean Water Act would not ordinarily provide a Federal nexus for activities on non-Federal lands where gnatcatchers occur. However, the COE has exercised jurisdiction on the SilverHawk project in Riverside County which contains 83 ha (205 ac) of coastal sage scrub. We conclude that it is prudent to designate these 83 ha (205 ac) of coastal sage scrub as critical habitat. We do not know of any other projects in gnatcatcher habitat under the jurisdiction of the COE.

By delegation of authority from the Department of Defense through the Department of the Army, the COE also has responsibility to address all ordnance and explosive wastes concerns and environmental restoration activities at former defense sites. As a result, the COE has jurisdiction over the East Elliot Ordnance Removal, a project that would affect 243 ha (600 ac) of habitat in San Diego County. We conclude that it is prudent to designate these 243 ha (600 ac) of coastal sage scrub as critical habitat.

• The BLM and Forest Service occasionally exchange their lands for non-Federal lands. These land exchanges generally result in more manageable landownership configurations for these agencies. These agencies mostly try to acquire private inholdings within larger Federal holdings in exchange for isolated Federal parcels that are surrounded by non-Federal land. The BLM and Forest Service have already completed most such land exchanges in southern California, and we do not anticipate any future land exchange efforts that would affect the gnatcatcher. Occasionally, projects such as roads or utility rights-of-way will cross both private and Forest Service or BLM property. In these instances, both Federal and non-Federal lands will be considered during the section 7 consultation process. Because private lands in the vicinity of Forest Service or BLM land generally do not contain gnatcatcher habitat, the potential of utility projects on Federal land also affecting gnatcatcher habitat on private land is speculative and likely remote.

• The Immigration and Naturalization Service (INS) conducts activities along the United States/Mexico border and at immigration check stations on major highways north of the border. Current anticipated projects along the border include fences and roads to increase interdiction of illegal immigrants. These projects are generally located within 400 m (0.25 mile) of the international border. Within this area, there are approximately 786 ha (1941 ac) of non-Federal lands containing gnatcatcher habitat that may be affected by these projects. We conclude that the designation of critical habitat in these areas is prudent.

• The Department of Housing and Urban Development (HUD) conducts programs to assist private landowners in the purchase, sale, and development of their properties. However, these programs generally involve rehabilitation or redevelopment of previously disturbed areas that do not contain gnatcatcher habitat.

• The Federal Emergency Management Agency (FEMA) is involved with non-Federal lands following natural disasters and other emergencies such as floods, earthquakes, and other natural events. FEMA's involvement in the projects typically does not occur during an ''emergency'' situation, but rather after the disaster has occurred, so that any impact to gnatcatcher habitat from such natural disasters would also likely have already occurred prior to FEMA involvement. For example, actions taken on private lands during a flood event, placing riprap for example, do not involve FEMA funds since private landowners are taking actions immediately. FEMA may provide financial assistance for the repair of culverts, roads, etc. after a disaster. In these cases, FEMA consults with us to avoid or minimize impacts to gnatcatchers. Additionally under the Hazard Mitigation Grant Program, FEMA funds programs, including vegetation management activities to reduce the likelihood of wildfires. FEMA is currently consulting with us on these actions. The existence of a Federal nexus from future FEMA disaster relief or other actions cannot be predicted and is at best speculative.

• The Federal Aviation Administration (FAA) oversees activities at existing airports and evaluates proposed airport expansion and new airport construction. Construction of new airports and expansion of existing airports have already been planned in southern California, and we considered these projects in the development of this determination. The Ramona Airport expansion project contains 9 ha (22 ac) of habitat. The designation of critical habitat on this parcel is prudent. We do not know of any other FAA projects proposed in gnatcatcher habitat.

As discussed above, FHWA, FAA, INS, and COE may carry out, fund, or authorize projects in gnatcatcher habitat on non-Federal lands in San Diego, Orange, and Ventura counties. We evaluated these lands to determine whether a designation of critical habitat would be prudent. We found that a Federal nexus exists for projects covering a total of 1,894 ha (4,680 ac), and determined that a designation of critical habitat would be prudent for these lands.

Approved NCCP Efforts

Several multi-species planning efforts and habitat conservation planning efforts have been undertaken within the southern California range of the gnatcatcher to conserve the species and its coastal sage scrub habitat. Principal among these are State of California Natural Community Conservation Planning (NCCP) efforts in Orange and San Diego counties. NCCP plans completed and permitted to date have resulted in the conservation of 40,208 ha (99,310 ac) of gnatcatcher habitat.

In southern San Diego County, the development of the NCCP Multiple Species Conservation Program (MSCP) has resulted in our approval of three southern County subarea plans under section 10(a)(1)(B) of the Act. These three southern subarea plans account for approximately 95 percent of the gnatcatcher habitat in southern San Diego County. Approval is pending for four other subarea plans within southern San Diego County's MSCP. This planning effort has resulted in the establishment of conservation areas that collectively contain 28,844 ha (71,274 ac) of coastal scrub habitat within a 69,573–ha (171,917–ac) preserve area.

In addition, we have approved the Orange County NCCP Central/Coastal Plan and issued an incidental take permit under section 10(a)(1)(B) of the Act. This planning effort has resulted in the conservation of 15,677 ha (38,738 ac) of reserve lands, which contain 7,621 ha (18,831 ac) of coastal sage scrub habitat.

We have also approved several smaller multiple species habitat conservation plans (HCPs) in San Diego Riverside, Los Angeles, and Orange counties. These include, Bennett Property, Meadowlark Estates, Fieldstone, and Poway Subarea Plan in San Diego County; Coyote Hills East and Shell Oil in Orange County; Ocean Trails in Los Angeles County; and Lake Mathews in Riverside County. These efforts have resulted in the protection of 3,743 (9,250 ac) of gnatcatcher habitat.

The gnatcatcher habitat in the approved NCCPs in San Diego and Orange counties was selected for permanent preservation and configuration into a biologically viable interlocking system of reserves by the local jurisdictions with our technical assistance and that of the California Department of Fish and Game. The reserve system established under the approved NCCP plans includes the coastal sage scrub habitat subject to the jurisdiction of those plans that we consider essential to the long-term survival and recovery of the gnatcatcher. In addition, the plans provide for management of the reserve lands to protect, restore, and enhance their value as gnatcatcher habitat. Because the essential gnatcatcher habitat that is subject to the jurisdiction of the approved plans is permanently protected in the habitat reserves, no additional private lands covered by the plans warrant designation as critical habitat. In addition, because the gnatcatcher habitat preserved in the plan is managed for the benefit of the gnatcatcher as required under the plans, there are no ''additional management considerations or protections'' within the meaning of ''critical habitat'' under section 3(5)(A)(ii) of the Act required for those lands. Therefore, we have determined that private lands subject to the approved NCCPs do not meet the

definition of critical habitat in the Act and that designation of such lands would not benefit the gnatcatcher.

Private Lands Without a Federal Nexus

We conclude that the designation of critical habitat on the 259,226 ha (640,560 ac) of coastal sage scrub on non-Federal lands that either lack a Federal nexus or are covered by approved HCPs under the NCCP program is not prudent. Threats and acts of vandalism toward coastal sage scrub habitats were most acute at the time of the publication of the final listing for the gnatcatcher in 1993 (58 FR 16742). The destruction of coastal scrub habitat in apparent attempts to circumvent potential land use restrictions resulting from Endangered Species Act prohibitions continues. Our Law Enforcement Division has received information on six incidents of land clearing that cumulatively resulted in the destruction of about 243 ha (600 ac) of coastal sage habitat and the possible take of up to eight pairs of gnatcatchers. These actions involved clearing of coastal sage scrub, in some instances without County grading permits, in San Diego, Riverside and San Bernardino counties. We also have recently initiated investigation into activities that apparently affected two endangered species, the Quino checkerspot butterfly and the Delhi Sands flower-loving fly.

As has been documented by a series of recent newspaper articles, some members of the public believe that—(1) critical habitat can be ''* * *put off limits for development* * *'' (San Diego Union Tribune, May 22, 1997), and (2) the presence of listed species on a land parcel can create ''* * *a lot of uncertainty among developers* * *'' and complicate land sales (Riverside Press-Enterprise, January 7, 1998).

The vast majority of private lands lack a Federal nexus that would invoke the section 7 prohibition against adverse modification of critical habitat. Also, considering the common misunderstandings about the effects of designation, we believe that designating such lands as critical habitat would increase the instances of habitat destruction and exacerbate threats to the gnatcatcher. Therefore, we conclude that the threats that would result from designating these lands as critical habitat outweigh the benefit that would be provided.

We will continue to investigate all instances of coastal sage scrub clearing that may result in an unauthorized ''take'' of gnatcatchers in violation of section 9 of the Act. Also, we are continuing extensive outreach efforts to address public misunderstandings about the gnatcatcher and its habitat. We are continuing to encourage local jurisdictions to pursue comprehensive multi-species conservation plans (e.g., NCCP plans) to conserve the gnatcatcher and other sensitive species. Our cooperative approach is intended to ameliorate the circumstances that may have led private landowners to destroy coastal sage scrub habitat and to correct the misinformation presented by some media accounts.

We acknowledge that in some cases a designation of critical habitat on private lands may provide some benefit to a species by highlighting areas where the species may occur or areas that are important to the species' recovery. However, as discussed above, the status of the gnatcatcher, its coastal sage scrub habitat requirements, and the location of that habitat are already well known, and this information is readily available. County planning agencies inform members of the public about sensitive resources, including the gnatcatcher and its habitat, that may potentially occur on their lands. For example, the County of San Diego informs applicants for grading permits of the status of gnatcatchers and may require them to survey for the birds prior to receiving a permit. Numerous newspaper articles have also appeared describing the gnatcatcher and its habitat. The plight of this species and coastal sage scrub habitat is well known to the public, and a designation of critical habitat on private lands will not appreciably increase landowners' knowledge of areas important for gnatcatcher conservation.

We, therefore, conclude that no benefit would arise from designating critical habitat on private lands that do not have a Federal nexus. To the contrary, we believe it is likely that a designation of critical habitat on private lands may incite some members of the public and increase incidences of habitat destruction through acts of vandalism above current levels. Because, in this case, no benefit can be identified, and because of increased threats to the gnatcatcher and its habitat likely to result from designation, we conclude that designation of critical habitat on private lands that lack a Federal nexus is not prudent.

Summary and Conclusion

We conclude that designation of critical habitat totaling 50,257 ha (124,188 ac) on lands within the United States portion of the range of the gnatcatcher is prudent (Table 1). This total includes all Federal lands within the range of the gnatcatcher (48,364 ha (119,508 ac)) and 1,894 ha (4,680 ac) of non-Federal lands where a Federal nexus exists.

In addition to determining whether designation of an area as critical habitat is prudent, we must also evaluate, in accordance with section 3(5)(A) of the Act, whether the area is essential to the conservation of the species and whether the area may require special management considerations or protection before designating the area as critical habitat. Also, section 4(b)(2) of the Act requires us to evaluate economic and other impacts, and exclude any area from the designation if the benefits of excluding the area outweigh the benefits of including the area, unless the exclusion would result in the extinction of the species. These additional determinations required to designate critical habitat are not a part of the prudency determination ordered by the Court. We are deferring these additional determinations consistent with the current listing priority guidance published (63 FR 10931) described below.

Listing Priority Guidance

We published Listing Priority Guidance for Fiscal Years 1998 and 1999 on May 8, 1998 (63 FR 25502). The guidance clarifies the order in which we will process rulemakings, giving highest priority (Tier 1) to processing emergency rules to add species to the Lists of Endangered and Threatened Wildlife and Plants; second priority (Tier 2) to processing final determinations on proposals to add species to the lists, processing new listing proposals, processing administrative findings on petitions (to add species to the lists, delist species, or reclassify listed species), and processing a limited number of proposed and final rules to delist or reclassify species; and third priority (Tier 3) to processing proposed and final rules designating critical habitat. Upon completion of higher priority listing actions in accordance with the listing priority guidance, we intend to go forward with the critical habitat designation process for the gnatcatcher.

References Cited

Riverside Press-Enterprise. January 7, 1998. Rats! Irked developers frustrated by butterfly. Page 22.

San Diego Union Tribune. May 22, 1997. Court says gnatcatcher must have safe habitat. Page A–3.

Authors

The primary authors of this document are Loren R. Hays, Doug Krofta, Art Davenport, Clark Roberts, and Jim

Bartel, Carlsbad Fish and Wildlife Office (see **ADDRESSES** section).

Authority

The authority for this action is the Endangered Species Act of 1973, as amended (16 U.S.C. 1531 *et seq.*).

Dated: January 21, 1999.

Jamie Rappaport Clark,

Director, U.S. Fish and Wildlife Service.

[FR Doc. 99–2866 Filed 2–5–99; 8:45 am]

BILLING CODE 4310–55–U

DEPARTMENT OF THE INTERIOR

Fish and Wildlife Service

50 CFR Part 17

RIN 1018–AC26

Endangered and Threatened Wildlife and Plants; Determination of Threatened Status for the Sacramento Splittail

AGENCY: Fish and Wildlife Service, Interior.

ACTION: Final rule.

SUMMARY: We, the U.S. Fish and Wildlife Service (Service), determine threatened status for the Sacramento splittail (*Pogonichthys macrolepidotus*) pursuant to the Endangered Species Act of 1973, as amended (Act). Sacramento splittail occur in Suisun Bay and the San Francisco Bay-Sacramento-San Joaquin River Estuary (Estuary) in California. The Sacramento splittail has declined by 62 percent over the last 15 years. This species is primarily threatened by changes in water flows and water quality resulting from the export of water from the Sacramento and San Joaquin rivers, periodic prolonged drought, loss of shallow-water habitat, introduced aquatic species, and agricultural and industrial pollutants. Designation of critical habitat is not prudent at this time. This rule implements the protection and recovery provisions afforded by the Act for Sacramento splittail.

EFFECTIVE DATE: March 10, 1999.

ADDRESSES: The complete file for this rule is available for public inspection, by appointment, during normal business hours at the Sacramento Fish and Wildlife Office, U.S. Fish and Wildlife Service, 3310 El Camino Avenue, Suite 130, Sacramento, CA 95821–6340.

FOR FURTHER INFORMATION CONTACT: Michael Thabault, Deputy Assistant Field Supervisor, U.S. Fish and Wildlife Service (see **ADDRESSES** section) (telephone 916–979–2710).

SUPPLEMENTARY INFORMATION:

Background

As used in this rule, the term ''Delta'' refers to all tidal waters contained within the legal definition of the San Francisco Bay-Sacramento-San Joaquin River Delta, as delineated by section 12220 of the State of California's Water Code. Generally, the Delta is contained within a triangular area that extends south from the City of Sacramento to the confluence of the Stanislaus and San Joaquin rivers at the southeast corner and Chipps Island in Suisun Bay. The term ''Estuary,'' as used in this rule, refers to tidal waters contained in the Sacramento and San Joaquin rivers, the Delta, and San Pablo and San Francisco bays. ''Export facilities,'' as used in this rule, refer to the Central Valley Project and State Water Project water export facilities in the South Delta.

Sacramento splittail were first described in 1854 by W.O. Ayres as *Leuciscus macrolepidotus* and by S.F. Baird and C. Girard as *Pogonichthys inaeqilobus.* Although Ayres' species description is accepted, the species was assigned to the genus *Pogonichthys* in recognition of the distinctive characteristics exhibited by the two California splittail species *P. ciscoides* and *P. macrolepidotus* (Hopkirk 1973). *Pogonichthys ciscoides,* endemic to Clear Lake, Lake County, California, has been extinct since the early 1970s. The Sacramento splittail (hereafter splittail) represents the only existing species in its genus in California.

The name splittail refers to the distinctive tail of the fish. Pogon-ichthys means bearded fish, referring to the small barbels (whisker-like sensory organs) on the mouth of the fish, unusual in North American cyprinids. Macro-lepidotus means large-scaled. The splittail is a large cyprinid fish that can exceed 40 centimeters (cm) (16 inches (in)) in length (Moyle 1976). Adults are characterized by an elongated body, distinct nuchal hump (on the back of the neck), and small, blunt head, usually with barbels at the corners of the slightly subterminal mouth. The enlarged dorsal lobe of the caudal fin distinguishes the splittail from other minnows in the Central Valley of California. Splittail are dull, silvery-gold on the sides and olive-gray dorsally. During spawning season, pectoral, pelvic, and caudal (tail) fins are tinged with an orange-red color. Males develop small white nuptial tubercles on the head. Breeding tubercles (nodules) also appear on the base of the fins (Moyle in prep).

Splittail are native to California's Central Valley, where they were once widely distributed (Moyle 1976). Historically, splittail were found as far north as Redding on the Sacramento River (at the Battle Creek Fish Hatchery in Shasta County), as far south as the present-day site of Friant Dam on the San Joaquin River, and up the tributaries of the Sacramento River as far as the current Oroville Dam site on the Feather River and Folsom Dam site on the American River (Rutter 1908). Recreational anglers in Sacramento reported catches of 50 or more splittail per day prior to the damming of these rivers (Caywood 1974). Splittail were captured in the past in southern San Francisco Bay and at the mouth of Coyote Creek in Santa Clara County, but they are no longer present there (Moyle in prep). The species was part of the Central Valley Native American diet (Caywood 1974).

In recent times, dams and diversions have increasingly prevented splittail from upstream access to the large rivers, and the species is now restricted to a small portion of its former range (Moyle and Yoshiyama 1992). However, during wet years, they migrate up the Sacramento River as far as the Red Bluff diversion dam in Tehama County, and into the lowermost reaches of the Feather and American rivers (Moyle in prep, Jones and Stokes 1993, Charles Hanson, State Water Contractors, *in litt.* 1993). Small numbers of splittail have recently been found in the upper Sacramento and San Joaquin rivers and their tributaries (Baxter 1995). Recent surveys of San Joaquin Valley streams found splittail in the San Joaquin River below its confluence with the Merced River, mainly following wet winters (Moyle in prep). Splittail have also been recorded using the Sutter and Yolo bypasses for spawning areas during wet winters (Sommer *et al.* 1997). Successful spawning has been recorded in the lower Tuolumne River during wet years in the 1980s, as well as in 1995. Both adults and juveniles were observed at Modesto, 11 kilometers (km) (6.6 miles (mi)) upriver from the mouth of the river (Moyle in prep). However, all of the sightings reported above were during wet years when splittail were able to exploit more spawning habitat. Except for very wet years, the species is for the most part now confined to the Delta, Suisun Bay, Suisun Marsh, and Napa Marsh. In the Delta, they are most abundant in the north and west portions when populations are low, but are more evenly distributed throughout the Delta following years of successful reproduction (Sommer *et al.* 1997).

Splittail are relatively long-lived, frequently reaching 5 to 7 years of age. An analysis of hard parts of the splittail indicate that larger fish may be 8 to 10

years old (Moyle in prep). Females are highly fecund, with the largest females producing over 250,000 eggs (Daniels and Moyle 1983). Populations fluctuate annually depending on spawning success, which is highly correlated with freshwater outflow and the availability of shallow-water habitat with submerged vegetation (Daniels and Moyle 1983). Fish usually reach sexual maturity by the end of their second year. The onset of spawning is associated with rising water levels, increasing water temperatures, and increasing day length. Peak spawning occurs from the months of March through May, although records of spawning exist for late January to early July (Wang 1986). In some years, most spawning may take place within a limited period of time. For instance, in 1995, a year of extraordinarily successful spawning, most splittail spawned over a short period in April, even though larval splittail were captured from February through early July (Moyle in prep). Within each spawning season older fish reproduce first, followed by younger individuals (Caywood 1974). Spawning occurs over flooded vegetation in tidal freshwater and euryhaline habitats of estuarine marshes and sloughs and slow-moving reaches of large rivers. Larvae remain in shallow, weedy areas close to spawning sites for 10 to 14 days and move into deeper water as they mature and swimming ability increases (Wang 1986 and Sommer *et al.* 1997).

Splittail are benthic (bottom) foragers. In Suisun Marsh, they feed primarily on opossum shrimp (*Neomysis mercedis*, and presumably, the exotic *Acanthomysis* spp. as well), benthic amphipods (Corophium), and harpactacoid copepods, although detrital (non-living and detached organic) material makes up a large percentage of their stomach contents (Daniels and Moyle 1983). In the Delta, clams, crustaceans, insect larvae, and other invertebrates also are found in the diet. Predators include striped bass (*Morone saxatilis*) and other piscivores (Moyle 1976).

In recent years, splittail have been found most often in slow moving sections of rivers and sloughs and dead-end sloughs (Moyle *et al.* 1982, Daniels and Moyle 1983). Reports from the 1950s, however, mention Sacramento River spawning migrations and catches of splittail during fast tides in Suisun Bay (Caywood 1974). Because they require flooded vegetation for spawning and rearing, splittail are frequently found in areas subject to flooding. Historically, the major flood basins distributed throughout the Sacramento and San Joaquin valleys provided spawning and rearing habitat. These flood basins have all been reclaimed or modified for flood control purposes (e.g., Yolo and Sutter bypasses). Although primarily a freshwater species, splittail can tolerate salinities as high as 10 to 18 parts per thousand (ppt) (Moyle 1976, Moyle and Yoshiyama 1992). California Department of Fish and Game (CDFG) survey data from 1979 through 1994 indicate that the highest abundances occurred in shallow areas of Suisun and Grizzly bays.

Recent research indicates that splittail will use the Yolo and Sutter bypasses during the winter and spring months for foraging and spawning (Sommer *et al.* 1997). However, the Yolo Bypass may only be used by splittail during wet winters, when water from the Sacramento River over-tops the Fremont Weir and spills over the Sacramento Weir into the Bypass. In 1998, the Yolo and Sutter bypasses provided good habitat for fish, particularly splittail, when they were flooded for several weeks in March and April. In order to provide spawning habitat for splittail, water must remain on the bypasses until fish have completed spawning, and larvae are able to swim out on their own, during the draining process.

The decline in splittail abundance has taken place during a period of increased human-induced changes to the seasonal hydrology of the Delta, especially the increased exports of freshwater. These changes include alterations in the temporal, spatial, and relative ratios of water diverted from the system. These hydrological effects, coupled with severe drought years, introduced aquatic species, the loss of shallow-water habitat to reclamation activities, and other human-caused actions, have reduced the species' capacity to recover from natural seasonal fluctuations in hydrology for which it was adapted.

Analyses of survey data collected from 1967 to 1993 (Meng 1993, Meng and Moyle 1995) and data from 1967 to 1997 by Service, CDFG, and University of California at Davis biologists from several different studies indicate the following results—(1) Overall, splittail abundance indices have declined. Meng and Moyle (1995) demonstrated that on average, splittail have declined in abundance by 60 percent through 1993. The CDFG updated these data to include the most current data available and provided to the Service. The CDFG calculated the data using the updated information. The results were similar. These updated data demonstrate that on average, splittail have declined significantly in abundance by 50 percent since 1984. The greatest declines (over 80 percent) were found from studies that sampled the shallow Suisun Bay area, the center of the range of the species (Meng and Moyle 1995). The updated information also show a significant decline (43 percent) for the studies that sampled the shallow Suisun Bay area. A study that began in 1980 in the lower Estuary, at the outermost edge of splittail range, found the lowest percent decline (20 percent) (CDFG unpublished data) through 1993. The analysis completed on the updated data also showed the smallest decline for this study (6 percent). The number of splittail young taken at State and Federal pumping facilities (measured as number of individuals per acre-foot of water pumped), as of 1993, had declined 64 percent since 1984. With the updated data, the number of splittail young taken at State and Federal pumping facilities demonstrated a 97 percent increase. This percent increase is due to the unusually high salvage that occurred during 1995.

We estimate splittail populations to be 35 to 60 percent of what they were in the 1940s, and these estimates may be conservative (Moyle in prep). CDFG midwater trawl data indicate a decline from the mid-1960s to the late 1970s, followed by a resurgence, with yearly fluctuations, through the mid-1980s. From the mid-1980s through 1994, splittail numbers have declined in the Delta, with some small increases in various years. This decline is also demonstrated in the updated CDFG data.

(2) Overall splittail abundances vary widely among years. Sommer *et al.* 1997 also found that splittail recruitment success fluctuates widely from year to year and over long periods of time. During dry years abundance is typically low. During the dry years of 1980, 1984, 1987, and 1988 through 1992, splittail abundance indices for young-of-the-year were low, indicating poor spawning success. Additionally, all year class abundances were low during these years. In 1994, the fourth driest year on record, all splittail indices were extremely low.

We believe wet years provide essential habitat for splittail and allow populations to rebound from dry years. Successful reproduction in splittail is often highly correlated with wet years. Large pulses of young fish were observed in wet years 1982, 1983, 1986, and 1995. In 1995, one of the wettest years in recent history, an increase in all indices was recorded, as in 1986, which was another wet year following a dry year. However, young of the year taken per unit effort (for example, either the number of fish per net that is towed or

the number of fish per volume of water sampled) has actually declined in wet years, steadily from a high of 12.3 in 1978 to 0.3 in 1993. The updated data from CDFG demonstrate this same decline in wet years, from 37.3 in 1978 to 0.6 in 1993. The abundance indices of splittail during the years of 1995, 1996, and 1997 were 44.5, 2.1, and 2.6, respectively. Year 1995 was a very wet year and splittail abundances were high. Years 1996 and 1997 were wet years, yet abundance indices were low. However, overall splittail declines remain high (82 percent/43 percent with updated data) in the shallow-water Suisun Bay area, the center of its distribution.

We believe high abundance indices in 1995 are an artifact of the highly unusual hydrological conditions that occurred. Therefore, we also calculated all of the percent declines, as stated above, without the 1995 abundance indices in the analysis. The overall decline is 67 percent. The decline from the studies in the shallow Suisun Bay area without 1995 is 80 percent. For the study in the lower Estuary, the decline is 39 percent. The salvage data collected at both the State and Federal pumping facilities demonstrate a 22 percent decline. Other than 1995, the salvage data include 1996 and 1997.

(3) A strong relationship exists between young-of-the-year abundance and outflow (i.e., river outflow into San Francisco Bay after water exports are removed). As outflow increases, annual abundance of young-of-the-year splittail increases. Changes in outflow explain 55 to 72 percent of the changes seen in young-of-the-year splittail abundance, depending on which survey data are analyzed.

(4) Splittail are most abundant in shallow areas of Suisun and Grizzly bays where they generally prefer low-salinity habitats. Salinities in Suisun and Grizzly bays increase when, as a result of water exports or drought conditions, the mixing zone (the freshwater-saltwater interface) shifts upstream.

(5) Concentration of splittail in shallow areas suggests that they are particularly vulnerable to reclamation activities, such as dredging, diking, and filling of wetlands.

The above data indicate that splittail abundances vary widely in response to environmental conditions, but the general population numbers are declining. The following are some reasons why the species is in decline. The splittail is primarily threatened by the altered hydraulics and reduced Delta outflow caused by the export of freshwater from the Sacramento and San Joaquin rivers through operation of the State and Federal water projects. These operations include not only the export of water from the Delta but also diversion of water to storage during periods of high run-off, which reduce instream flows and available submerged aquatic habitat for spawning and rearing. Additional threats to this species include—

(1) Direct and indirect mortality at power plants and in-Delta water diversion sites;

(2) Reduced river flows and changes in the seasonal patterns of flows in the Sacramento and San Joaquin rivers and their tributaries;

(3) The loss of spawning and nursery habitat as a consequence of draining and diking for agriculture;

(4) The loss of shallow-water habitat due to levee slope protection, marina construction, and other bank oriented construction activities;

(5) The reduction in the availability of highly productive brackish-water habitat;

(6) The presence of toxic substances, especially agricultural and industrial chemicals and heavy metals in their aquatic habitat;

(7) Human and natural disturbance of the food web through altered hydrology and introduction of exotic species;

(8) Flood control operations that strand eggs, larvae, juveniles, and adults;

(9) The increase in severity of these effects by six years of drought; and

(10) Entrainment (pulling) of fish through unscreened or inadequately screened municipal and agricultural diversions.

Previous Federal Action

We included the Sacramento splittail as a category 2 candidate species for possible future listing as endangered or threatened in the January 6, 1989, Animal Notice of Review (54 FR 554). Category 2 candidates were defined as those species for which information in our possession indicated that proposing to list as endangered or threatened was possibly appropriate, but for which conclusive data on biological vulnerability and threats were not currently available to support proposed rules. We discontinued the use of multiple candidate categories on February 28, 1996 (61 FR 7596), and species meeting the definition of the former category 2 are no longer considered candidates.

On November 5, 1992, we received a petition from Mr. Gregory A. Thomas of the Natural Heritage Institute to add the Sacramento splittail to the List of Endangered and Threatened Wildlife and to designate critical habitat for this species in the Sacramento and San Joaquin rivers and associated estuary. Mr. Thomas identified eight organizations as co-petitioners, including the American Fisheries Society, the Bay Institute of San Francisco, the Natural Heritage Institute, the Planning and Conservation League, Save San Francisco Bay Association, Friends of the River, the San Francisco Baykeeper, and the Sierra Club. We published a 90-day finding on July 6, 1993 (58 FR 36184), that the petition presented substantial information indicating that the requested action may be warranted. We initiated a status review and analyzed available data on this species (Meng 1993).

On January 6, 1994, we published a proposed rule to list the splittail as a threatened species and requested public comment (59 FR 862). The proposed rule constituted a 12-month finding that the petitioned action was warranted, in accordance with section 4(b)(3)(B) of the Act.

On January 10, 1995, we published in the **Federal Register** (60 FR 2638) a notice of a 6-month extension to make a final listing determination and reopened a 45-day public comment period on the proposed rule to list the splittail. The basis for this extension was to address differences of scientific opinion concerning the status of splittail upstream of the Delta, especially the existence of a resident population upstream of the Delta. In April 1995, subsequent to the close of the extension period, a moratorium on the processing of all final listing proposals was established by Congress in Public Law 104–6. The moratorium was lifted on April 26, 1996. As mandated by the moratorium, we conducted no actions to finalize the proposed rule during the period April 1995 to April 1996.

As described in detail below, we reopened the comment period on May 18, 1998. We solicited the latest information regarding the abundance and distribution of the species. Additionally, we requested comments concerning the publication, ''Resilience of Splittail in the Sacramento-San Joaquin Estuary'' (Sommer *et al.* 1997).

The processing of this final rule follows our final listing priority guidance for fiscal years 1998 and 1999 published in the **Federal Register** on May 8, 1998 (63 FR 25502). The guidance clarifies the order in which we will process rulemakings giving highest priority (Tier 1) to processing emergency rules to add species to the Lists of Endangered and Threatened Wildlife and Plants; second priority (Tier 2) to processing final determinations on proposals to add

species to the lists, processing new listing proposals, processing administrative findings on petitions (to add species to the lists, delist species, or reclassify listed species), and processing a limited number of proposed and final rules to delist or reclassify species; and third priority (Tier 3) to processing proposed and final rules designating critical habitat. Processing of this final rule is a Tier 2 action.

Summary of Comments and Recommendations

In the January 6, 1994, proposed rule (59 FR 862), we requested all interested parties to submit factual reports or information, that might contribute to the development of a final rule. We contacted State agencies, county governments, Federal agencies, scientific organizations, and other interested parties and requested comments. We held public hearings on the proposed splittail listing in conjunction with hearings on two other proposed Federal actions, the designation of critical habitat for delta smelt (*Hypomesus transpacificus*) (59 FR 852), and the United States Environmental Protection Agency's (USEPA's) water quality standards for the Estuary (59 FR 810). We published newspaper notices of the public hearings on February 4, 1994, in the *Sacramento Bee, Fresno Bee, Los Angeles Times,* and *San Francisco Chronicle,* all of which invited general public comment. We held public hearings on February 23, 1994, in Fresno; on February 24, 1994, in Sacramento; on February 25, 1994, in San Francisco; and on February 28, 1994, in Irvine. At each meeting, we took testimony from 1 p.m. to 4 p.m. and 6 p.m. to 8 p.m.

During the 3-month comment period from January 6 to March 7, 1994, we received comments (i.e., letters and oral testimony) from 133 individuals, organizations, or government agencies. Many of these comments were given at joint public hearings for the combined Federal rulemaking package for the Sacramento-San Joaquin Delta (including the proposal to list the Sacramento splittail, the proposal to designate critical habitat for the delta smelt, and final water quality standards for the Delta being proposed by the USEPA). Only 13 of the 133 commenters addressed the proposed rule to list the Sacramento splittail. Four of the 13 commenters that specifically addressed the proposed rule to list the Sacramento splittail provided oral testimony at the public hearings. Of the 13 commenters mentioned above, nine supported the listing of the splittail, two opposed the listing, and others provided comments considered as neutral. Five conservation organizations (or branches thereof), one sport fishing organization, two interested parties, and a Federal agency (the Bureau of Reclamation (BOR)) supported the proposed listing. The California Department of Water Resources (DWR) and the State Water Contractors opposed the proposed listing. We received no additional expert opinions from independent specialists concerning pertinent scientific or commercial data about the splittail.

On August 4, 1994, we received a letter dated August 3, 1994, from the State Water Contractors requesting a 6-month extension on the listing determination. The reasons provided in the request for extension were the same as those submitted during the public comment period, addressed below.

We granted a 6-month extension to address the status of splittail upstream of the Delta, and the importance of any such splittail to the population as a whole. Therefore, we reopened the public comment period for 45 days, beginning January 10, 1995, and ending February 24, 1995. During this second comment period we received one additional comment letter that opposed the listing of the splittail. The comment letter addressed this issue in part.

On March 19 and March 20, 1998, the DWR and the State Water Contractors, respectively, requested the comment period be reopened. The basis of this request was that substantial data had been collected since 1995 regarding the abundance and distribution of the splittail. We believe that consideration of this and any new information is significant to the final determination of the status of the Sacramento splittail. For this reason, we sought information concerning abundance and distribution data for this species from 1995–1997. Specifically, we sought comments regarding information presented in the publication, ''Resilience of Splittail in the Sacramento-San Joaquin Estuary'' (Sommer *et al.* 1997), and how the results affect our recommendation for listing the Sacramento splittail as a threatened species. The comment period was opened on May 18, 1998, and closed on July 17, 1998. We received comments from eight respondents, whose comments are summarized below.

The written comments and oral statements, questioning or opposing the listing of the splittail, or otherwise providing information, obtained during the public hearings and comment periods are combined into general issues that are summarized, discussed and responded to below. Most of the comments supporting the listing did not provide any additional information, so we have not prepared a discussion or response to these comments.

Issue 1: A respondent commented that our statement about splittail decline was based on data regarding splittail juveniles. The respondent argued that adult splittail are abundant and that our reliance on a limited portion of the year classes for a listing determination is inappropriate.

Service Response: We have reviewed the seven data sets used in the status review (Meng 1993). These data sets include—(1) a fall midwater trawl survey in the upper Estuary by CDFG; (2) a monthly midwater and otter trawl in the lower Estuary by CDFG (San Francisco Bay-Outflow Study, hereafter Bay Study); (3) a monthly otter trawl survey of Suisun Marsh (a tidal marsh next to Suisun Bay) by the University of California; (4) a midwater trawl survey that we conducted at Chipps Island in Suisun Bay; (5) a midwater trawl survey that we conducted in the Sacramento River; (6) a beach seine survey that we conducted in the Delta and Sacramento River; and (7) fish salvage data collected by CDFG and the BOR at the State and Federal pumping facilities located in the south Delta. The beach seine survey and Sacramento River midwater trawl were not used in the analysis of abundance trends because several years of data were missing. (See next comment for criteria used to identify data sets suitable for inclusion in abundance trend analysis.) Of the surveys that were used to establish abundance trends, ratios of young-of-the-year to adults were approximately equal for three out of five surveys (fall midwater trawl, Bay Study, and Suisun Marsh). Of the remaining surveys, the Chipps Island trawl was dominated by young-of-the-year, and fish salvage sampled five times as many young as adults. We calculated percent declines independently for each survey. When the two surveys dominated by young-of-the-year are removed from the analysis, overall average percent decline remains the same. Therefore, the contention that splittail adults are abundant, and that our analysis relied on a particular age-class of the species, is unfounded.

Issue 2: One respondent maintained that the studies we relied on were limited geographically (i.e., to the Estuary) and that splittail may occupy a wider range. Conversely, another respondent commented that the Estuary is the principal habitat of splittail and virtually all splittail are found in the Estuary for the first 2 years of their lives.

There was also disagreement about the gear types used for sampling. One respondent held that they were not appropriate, whereas another respondent stated that gear used by the studies, (i.e., bottom and midwater trawls) captured all sizes of splittail. The respondent that questioned gear suitability also commented that studies used in the listing determination were designed to capture striped bass, were limited in their ability to sample shallow and inshore habitats, and that the use of the CDFG abundance index was inappropriate.

Service Response: We used several criteria to determine if a data set could be incorporated into the analysis of trends in splittail abundance and distribution. Data had to be collected for at least 10 consecutive years and effort had to be relatively constant or a core data set had to be available to extract for analysis. A core data set of at least 10 consecutive years provides the necessary information to conduct an analysis of long term trends in abundance. One respondent referred to the use of two data sets that sampled upstream of the Estuary. These data sets were not included in the analysis of abundance trends because time of year of sampling varied, sampling sites varied, and some years of sampling were missing. These data sets were examined however, for trends in distribution, and showed that capture of splittail decreased as sampling was conducted further upstream from the Estuary. One of the surveys referred to by the respondent consists of samples taken upstream of the Delta and catches young-of-the-year almost exclusively. Because splittail migrate upriver to spawn in the spring (Meng and Moyle 1995), it is likely that these catches are the offspring of splittail that reside further downstream for the remainder of the year.

Regarding gear suitability, a respondent suggested that certain gear used, especially tow nets and trawls, were not appropriate for sampling splittail because of their benthic habits and preference for shallow water. The respondent also referred to gillnetting as an effective method for capturing splittail.

We agree that the summer townet survey is inefficient in sampling splittail and therefore, was not included in the analysis of abundance. However, several trawling methods were included. Meng (1993) compared the effectiveness of three types of gear from one survey—bottom (otter) trawls, midwater trawls, and beach seines. Bottom and midwater trawls sampled equal proportions of all splittail year classes (i.e., young-of-the-year, fish 1 year or older, and fish 2 years or older). The beach seine was selective for young-of-the-year. High catches of young-of-the-year in midwater trawls are thought to reflect movement of young out of near shore areas when water recedes. They are frequently captured in channels, presumably as they move downstream (Meng and Moyle 1995). The information outlined above suggests that regularly repeated bottom and midwater trawls are reasonably effective for sampling splittail and examining trends through time.

There are no long-term gillnetting data sets that meet the criteria above for inclusion in the analysis of abundance. Furthermore, gillnetting results in high fish mortality, and long-term sampling by gillnet is not feasible in waters with sensitive species. Almost all sampling techniques have biases. For the data used in the abundance analysis, the sampling remained constant. Therefore, the biases remained constant through time, and there was a consistent downward trend in splittail abundance.

Most of the sampling programs in the Estuary were initiated to track changes in striped bass or salmon (*Oncorhynchus tshawytscha*) populations. These long term data sets can be used to assess changes in abundance of other species as long as assumptions of sampling design are considered. Limitations of surveys designed for striped bass or salmon have been consistent through time. Problems with sampling shallow and inshore habitats have not changed and should not affect relative abundance trends. Therefore, trends or changes in splittail abundance reflected by these surveys should be unaffected by the various weaknesses identified by the respondent. The high correlation between the CDFG abundance index and numbers of fish (83 percent of the variability is explained) suggests that the index is a reasonable estimator of population trends.

Issue 3: One respondent commented that three separate data sets, including a gillnet survey, suggest that splittail are abundant throughout the Delta. Another respondent countered that gillnetting surveys cited as evidence of abundance were based on a single night of sampling in the American River when splittail were presumably concentrated for spawning. This respondent added that the 60 percent decline cited in the proposed rule is remarkable because one strong year class (such as occurred in 1983) can mask an overall decline in this long-lived species.

Service Response: The Act requires us to base listing determinations upon best available scientific and commercial data. The three data sets referred to by the respondent are limited temporally and geographically. One of the data sets referred to by the respondent covers one night of gillnet sampling in one location. The other two data sets refer to 2 years of sampling, separated by more than 10 years, at the Pacific Gas and Electric plant in Antioch. We considered all available data but determined that incorporation of sporadic or isolated sampling events was not appropriate because of problems associated with drawing conclusions from limited or sporadic data.

Issue 4: A respondent commented that no data were provided to support the conclusion that successful reproduction is highly correlated with wet years.

Service Response: Regression analyses of splittail young abundance versus spring outflow (February-May) show strong relationships. As spring outflow increases, abundance of splittail young increases. Changes in spring outflow explained varying percentages of changes in abundance of splittail young and ranged from 55 to 72 percent, depending on which survey data were analyzed (Meng and Moyle 1995). All of the regression analyses were significant (probability values ranged from less than 0.0001 to 0.0025) (Meng and Moyle 1995). This is a strong correlation between successful reproduction and wet years. The low and high abundance indices of juvenile abundance from 1994 and 1995, respectively, is consistent with this analysis.

Issue 5: One respondent commented that the data we used to determine the decline of splittail was biased by the fact that the time period used to determine pre-decline and post-decline was heavily weighted with wet years in the pre-decline period, thereby biasing the analysis.

Service Response: We analyzed only wet years to determine if there had been a decline within that year type. That analysis indicated that even in wet years, when one would anticipate substantially higher recruitment, there had been an overall decline in splittail abundance. Young-of-the-year abundance declined steadily in the annual Chipps Island trawl in wet years from 1978 to 1993. Abundance in 1993 was less than 3 percent of what it was in 1978. Abundance per unit effort was approximately 12.3 in 1978, 8.1 in 1982, 2.0 in 1983, 1.3 in 1986 and less than 0.3 in 1993. This first analysis was done using a catch-per-tow analysis. The second analysis of splittail abundance using a different analytical method that was based on a catch-per-volume of

water sampled yields a similar result. The volumetric methodology yields a catch per unit effort (CPUE) at the Chipps Island trawl site of 2.6 in 1978, 0.97 in 1982, 0.77 in 1983, 0.73 in 1986, and 0.21 in 1993. These two analyses show that there is an overall reduction in abundance that is not solely a result of drought conditions. Using the second analytical method yields a CPUE for 1995 and 1996 of 2.1 and 0.63 respectively, which were both wet years. If there were a stable number of sexually mature fish throughout the period of decline, one would expect similar reproduction in both years. However, there was a substantial decline from 1995 to 1996, which may indicate that there were not as many adult fish, reflected by the lower CPUE in 1996.

Issue 6: One respondent commented that there is no evidence to support the statement that lower numbers of splittail young-of-the-year during the drought may affect the stock's ability to recover.

Service Response: Our status report (Meng 1993) and the proposed rule (59 FR 862) indicated that wet years are required for splittail recruitment. However, as previously discussed in the analysis of only wet years, young-of-the-year abundance has declined during these years. Because splittail live 5 to 7 years and rely on wet years for strong year classes, a prolonged drought, such as the recent 6-year drought, may provide little recruitment opportunities. The steady decline in young-of-the-year abundance in the Chipps Island trawl, combined with a 5 to 7 year life span and reliance on wet years for strong year classes, suggests that lower numbers of splittail young during the drought will reduce the number of adult fish in subsequent wet years. This overall decline in splittail abundance, even during wet years, may affect the ability of the species to recover.

Issue 7: A respondent commented that the drought, not exports, was responsible for the recent decline in splittail abundance indices.

Service Response: Water exports at the State and Federal pumping facilities are not the only threat to the species related to the State Water Project and the Central Valley Project. The State and Federal water projects are interbasin water delivery systems that include 34 reservoirs, thousands of miles of aqueducts and canals, and large pumping facilities in the south Delta. Storage in reservoirs and conveyance components of the projects also have substantial effects on the splittail. Outflow conditions that inundate large vegetated areas are affected by pumping because increases in pumping must be supported, at some point, by increases in diversions to State and Federal reservoirs. Most rainfall occurs during winter and spring in California, and high spring flows are augmented by snow melt. Historically, high spring flows provided flooded areas and shallows for fish spawning and rearing. Construction of upstream reservoirs allowed large amounts of these high spring flows to be diverted to storage for later release. Diversion of water to storage dampens peak spring flows beneficial to splittail spawning success and provides water for pumping when flows to the Estuary decrease.

Since 1983, the proportion of water exported from the Delta during October through March has been higher than in earlier years (Moyle *et al.* 1992). Changes in timing and amounts of exports, as well as operations of upstream water storage facilities, affect fish migration and spawning habits. Dampening of peak spring flows by springtime diversions to storage to replenish depleted reservoirs has deleterious effects on estuarine species such as splittail, which evolved in a system with periodic spring flooding.

As previously discussed, in wet years when fish production is generally high, large segments of the juvenile population are vulnerable to export facilities both directly and indirectly through entrainment and altered Delta hydrology. This vulnerability is reflected in wet year abundance indices. The adverse effects of the pumps in wet years combined with poor recruitment during dry years exacerbates the population demographic outlook for the splittail.

Issue 8: A respondent commented that calculations in the status report were incorrect. This comment targeted a reference in the proposed rule regarding the abundance of splittail in the Suisun Bay area.

Service Response: This comment was apparently based on a misinterpretation of data included in the status report. The respondent incorrectly assumed that the top half of Figure 13 in the status report supported statements in the text regarding abundance of splittail in Suisun Bay. However, this portion of Figure 13 was intended to indicate the approximate locations and effort of the different surveys used for the status report. The bottom half of Figure 13 was intended to support statements about abundance of splittail in the Suisun Bay area. The respondent acknowledged the high catches in Suisun and Grizzly bays represented in the bottom of Figure 13. Furthermore, two CDFG surveys indicate that abundance of splittail captured by each survey, comprising 72 and 56 percent of the catch, respectively, was taken in those areas (Meng and Moyle 1995).

The respondent also stated that values used to construct the top half of Figure 13 were incorrect. The respondent recalculated the values, but used incomplete data sets (Chipps Island trawl) or incorrect data sets (Suisun Marsh). Furthermore, the respondent referred to Bay Study beach seine data that were not included in the analysis and constructed a table of values without using the appropriate scale included on the original figure. The respondent stated that adding ratios, as in Figure 13, violates basic laws of algebra. However, the figure was not intended to show the sums of catches in different areas. The figure was intended to illustrate the relative contributions of different surveys in different areas. The top half of Figure 13 has been removed from the status report because it was confusing and did not contribute to the analysis.

Issue 9: Two respondents commented that outflow conditions that inundate large vegetated areas and result in favorable spawning conditions are largely unaffected by diversion and export capabilities of the State and Federal water projects.

Service Response: Evidence offered to support this comment is a correlation analysis performed by DWR indicating that there is a positive relationship between the number of days that the Yolo and Sutter bypasses are flooded and splittail young abundance. The Yolo and Sutter bypasses are flood control structures that bypass flows 96 and 128 km (60 and 79 mi) upstream of the confluence of the Sacramento and San Joaquin rivers respectively. Because high outflows and number of days the bypasses are flooded are strongly correlated, it is difficult to isolate flooding of these specific areas as the most important factor influencing splittail abundance. Although flooding of the bypasses may result in favorable spawning conditions, young located in the bypasses are likely to experience high mortality because they become trapped in depressions and agricultural drainage canals when water recedes (Jones and Stokes 1993).

Issue 10: One respondent commented that the effects of entrainment on splittail are questionable. The respondent questioned statements in the proposed rule that splittail may be more vulnerable to the effects of entrainment in water project facilities in dry years. The respondent based the argument on strong relationships between splittail abundance and losses to project operations.

Service Response: An entrainment index was developed (a ratio of indices from two surveys, i.e., salvage of entrained fish at water project facilities divided by the fall midwater trawl index) that demonstrated entrainment of splittail young was higher in wet years. We acknowledge that based on the two surveys comprising the entrainment index, entrainment of splittail appears to occur in proportion to abundance, that is, entrainment is higher in wet years. Because splittail abundance relies on high levels of recruitment in wet years, taking more splittail in wet years does not remove the threat of entrainment in water project facilities from the population. In the early 1980s, hundreds of thousands of splittail young were salvaged monthly by the State export facility alone (this number has decreased as abundance has decreased). Since splittail abundance relies on strong year classes in wet years to support the population during poor environmental conditions, entrainment of large numbers of young, even in proportion to abundance, remains a threat.

With the exception of the Bay Study, all 1995 indices were less than historic wet year indices or, in the case of the Fall-midwater Trawl survey, not as high as pre-decline wet-year indices. However, the combined CVP/SWP salvage was more than double any previous year's salvage index, wet or dry (approximately 8 million young-of-the-year fish for the entire year versus less than 4 million young-of-the-year fish in 1986, which was the next highest entrainment index on record). This suggests that during 1995, the CVP/SWP export facilities in the Delta may have actually entrained fish in greater proportion to abundance than in past years.

Issue 11: One respondent questioned the mechanism by which shallow water habitat has been lost in recent years. The respondent stated that a significant amount of marsh habitat was diked and drained in the first part of this century, but relatively little reclamation of wetlands occurred within the last decade.

Service Response: We acknowledge that most wetland losses in the Estuary occurred in the first part of this century. The recent loss of shallow water habitat in the Estuary is due to increasing salinities in Suisun Bay, a shallow area. Suisun Bay was historically fresh to brackish much of the year and important for the rearing of Delta fishes. Increasing salinities in the Suisun Bay area due to decreases in outflow have reduced available shallow water habitat for splittail, primarily a freshwater species. Increasing salinities in this area have also decreased *Neomysis mercedis* production, a primary splittail food and a factor cited by the respondent as being a possible cause of decline.

Issue 12: One respondent commented that the possible effects of predators and competitors deserves greater consideration. The respondent referred to three introduced species that have experienced population explosions during the same period that splittail declined, two gobies and one atherinid, the inland silverside (*Menidia beryllina*).

Service Response: We acknowledge that the three introduced species and the splittail may occupy similar habitats. However, these introduced species rarely exceed 8 cm (3.4 in) in length as adults, one-fifth the size of splittail. Thus, direct predation by the introduced species on splittail is unlikely. It is also unlikely that adults of the introduced species consume splittail young because of differences in spawning sites, that is, many splittail spawn upstream of and in the upper portions of the Estuary. Furthermore, competition for food or resources (such as spawning sites) is unlikely and would be difficult to extract from the wide array of factors that may affect splittail. The introduced species most likely to affect splittail is striped bass, which is known to favor splittail for food (see Factor C in the ''Summary of Factors Affecting the Species'' section). Splittail and striped bass, however, have coexisted for decades in the Estuary. Recent declines in splittail have occurred in concert with striped bass declines.

Issue 13: A respondent stated that the reason for our decision not to designate critical habitat is not entirely clear from the proposed rule. Further, the respondent expressed concern that we provide splittail with a level of protection afforded by listing the species as threatened pursuant to the Act rather than addressing threats to the species in recovery work that is already being undertaken for Delta fisheries in general.

Service Response: We clarify the decision not to designate critical habitat in the ''Critical Habitat'' section of this rule. Based on our analysis of threats, including the lack of recovery efforts implemented and regulatory controls, we determined threatened status for the splittail in this rule. The Sacramento San-Joaquin Delta Native Fishes Recovery Plan (U.S. Fish and Wildlife Service 1996) discusses threats and needed restoration actions in detail.

Issue 14: One respondent questioned the need to list splittail with current protections in place for delta smelt and proposed USEPA water quality standards for the Estuary (59 FR 810). The respondent stated that increases in water demand for splittail would affect the predictability of water supplies for other users.

Service Response: In determining to list the splittail, we considered the effects of the listing of delta smelt and designation of critical habitat for the delta smelt (60 FR 4664) as well as implementation of the State's Water Quality Control Plan (WQCP). We believe that the life history and habitat requirements of splittail will not be satisfied by these actions.

The life history characteristics and habitat usage of splittail differ from those of delta smelt. Splittail migrate farther upstream to spawn in the Sacramento and San Joaquin rivers and their tributaries than do delta smelt. Consequently, protections for this species will not overlap completely with those needed for splittail. Splittail also differ from the already listed species in their habitat usage. Because splittail prefer shallow water, with emergent vegetation, they are particularly threatened by reclamation, dredging, and development activities in those habitat types. Finally, because splittail are long-lived and spend much of their lives in the Estuary, contaminants pose a greater threat to this species than to delta smelt.

As described in detail under Factor D of the ''Summary of Factors Affecting the Species'' section, water quality objectives developed by the SWRCB could benefit splittail. In 1995, the SWRCB adopted a WQCP for the San Francisco Bay/Sacramento-San Joaquin Delta Estuary (95–1WR, May 1995) to protect water quality and to control water resources that affect the beneficial uses of the Bay-Delta Estuary. As an interim implementation measure, the SWRCB adopted Water Rights Order 95–6, which relies on the CVP and SWP to comply with the new standards. The flows identified in the water rights decision 95–6 that were implemented through section 7 of the Act with the BOR and USEPA were intended to benefit splittail as well as delta smelt. These flows would provide spawning flows in tributaries as well as habitat and transport flows in and through the Delta if the WQCP is fully implemented. However, this WQCP has not proven entirely adequate to protect against the effects of entrainment both at the CVP/SWP export facilities and other agricultural and municipal water diversions. For example, operations of the CVP and SWP facilities were altered only slightly for a 3-day period of time

in June of 1995 to reduce the effects of salvage on out-migrating juvenile splittail. This action was taken after almost 6 million juvenile splittail were entrained and salvaged at the State and Federal export facilities in the spring of 1995. Between the middle of April and the end of June, over 6.3 million juvenile fish were salvaged at these facilities. Based on data that we received from ongoing monitoring programs during 1995, the vast majority of the fish were probably of San Joaquin River origin, where substantial spawning has not occurred in over a decade. The monitoring programs showed little juvenile production and out migration from the Sacramento River. Even if a population exists upstream of the Delta, State and Federal project operations have done little, even in this new regulatory environment, to protect against entrainment of those fish. Additionally, exports during the out migration period change the behavioral cues and hydrology that may affect the ability of juveniles to move out of the Delta.

Moreover, the SWRCB has not completed the development of a long term implementation plan for the 1995 WQCP. The SWRCB has prepared a draft Environmental Impact Statement that evaluates a range of potential alternative actions so that responsibility to meet the water quality objectives in the 1995 WQCP can be allocated. The SWRCB is currently holding hearings to obtain all necessary information so that an implementation plan can be developed. An experimental proposal has been developed by stakeholders on the San Joaquin River along with the Service and other State and Federal agencies. The proposal, known as the Vernalis Adaptive Management Plan (VAMP), would evaluate the effects of flow and exports on salmon, along with a barrier at the head of Old River, for the next 12 years. It may be accepted by the SWRCB and may provide some benefit to splittail, but full evaluation of the benefits and impacts to the species will not occur until the experiment is complete. We will participate in the implementation of VAMP.

Issue 15: Several respondents questioned our reliance on the entrapment zone (the area of the Estuary where saltwater and freshwater meet) and its importance to splittail. Another respondent questioned our reliance on changes in salinity and shifts in the distribution of splittail upstream concurrent with shifts in the salinity.

Service Response: We agree that there is little if any correlation between splittail abundance and the entrapment zone. However, the entrapment zone is an important ecological indicator. It provides an area in the estuary that is highly productive. However, when located upstream, the mixing zone is not as productive because it is confined to deep river channels where the total surface area is smaller, fewer shoal areas exist, water currents are swifter and more turbulent, and zooplankton productivity is low.

Issue 16: One respondent commented that we could not support the conclusion that all size classes of splittail suffer near total loss at the export facilities due to entrainment.

Service Response: According to salvage facility personnel, juvenile splittail may suffer up to 50 percent mortality due to salvage at the facilities (Scott Barrow, CDFG, pers. comm. 1995). Other forms of mortality exist due to screen efficiency, predation, and impingement that are not quantifiable at this time. We have modified the rule accordingly.

Issue 17: Several commenters raised the issue of peer review of the data and conclusions. One commenter also stated that there was no public access to the data.

Service Response: The proposed rule to list the splittail was published on January 6, 1994, prior to the time that the interagency policy on peer review (59 FR 126) was made effective on July 1, 1994. Despite this, we sent data used in the proposed rule to Dr. Bruce Herbold, USEPA; Dr. Peter Moyle, University of California at Davis; and Dr. Larry Brown, U.S. Geological Survey (USGS) for their review. None of these reviewers provided written comments concerning the data. Additionally, several meetings were held between the Service and CDFG's Bay-Delta Division during the comment period to discuss the data and methodologies used to establish trends in abundance. The CDFG did not disagree with the data used or the methodology used in the analysis.

As described above, we reopened the comment period twice, once in 1995 and again in 1998. During the reopened comment period beginning in January 1995, we considered a substantive issue that CDFG and others raised during the original comment period. The subject of the significant scientific disagreement, that resulted in reopening the comment period, was whether a resident population of Sacramento splittail existed in the upper rivers that was not being detected by the current sampling methodologies. The CDFG conducted a study in the Fall of 1994 to address this question. The results of the study were available in February of 1995 and largely supported our listing. This study was conducted by the CDFG under the review of an interagency science committee (the Interagency Ecological Program). The re-opening of the comment period in 1998 was based, in part, on information in the peer-reviewed publication ''Resilience of Splittail in the Sacramento-San Joaquin Estuary'' (Sommer *et al.* 1997).

Moreover, the status report that Meng prepared was peer reviewed for its scientific basis. That status report was the basis of an article in the Transactions of the American Fisheries Society, which was again peer reviewed (Meng L. and P. Moyle, 1995). Additionally, the final Sacramento-San Joaquin Delta Native Fishes Recovery Plan (U.S. Fish and Wildlife Service 1996) that discussed the status of the splittail was subject to public comment and review.

Although obtaining raw data from various agencies may have been delayed due to quality assurance and quality control, all data was available between the closing of the first comment period, and during both of the reopened comment periods. Although there may be minor differences in the final analysis contained in this final rule, these differences do not change our conclusion regarding the status of the species and the threats to the species.

Issue 18: The one comment received during the second comment period suggests that there may be a resident splittail population upstream of the Delta in the upper reaches of the mainstem rivers or their tributaries.

Service Response: We agree that splittail do occur in the upper reaches of the Sacramento and San Joaquin rivers in some years. While we excluded the beach seine data sets from the analysis of abundance (for the reasons stated in our response to Issue 2), we never eliminated these, or other data sets, from our analysis of distribution. The beach seine sampling collects relatively fewer fish, on a catch-per-unit-effort basis, than do the surveys further down the Estuary, such as the Chipps Island trawl. This sampling indicates that the splittail, although utilizing these upstream areas, are not utilizing them in substantial numbers, and certainly not in sufficient numbers to constitute a population. The CDFG sponsored a special study to try and determine if there were substantial resident populations upstream of the Delta in 1994 (Baxter 1994). The results of this study indicated that in 1994, the bulk of the population resided in and around Suisun Bay, Big Break, and Grizzly Bay, which correlates to the distribution of shallow water wetlands throughout this region.

Issue 19: Below we summarize comments from several respondents concerning the Sommer *et al.* (1997) paper. The respondents state the following reasons for not listing the splittail—(1) The splittail is more widely distributed and abundant than previously thought; (2) The splittail is a highly fecund, resilient, and long-lived species with more than one year class spawning at one time; therefore, it can rebound because of its high reproductive capacity; (3) The splittail's range has not decreased dramatically; (4) The splittail is able to endure drought conditions and rebound in wet years; (5) Splittail are robust and can handle stress at the export facilities; and (6) Splittail are not at risk from pumping; they are taken in relative proportion to their abundance.

Service Response: Item 1—We disagree with the statement that the splittail is more widely distributed and abundant than previously thought. However, we have always asserted that in some years splittail are found in the upper Sacramento and San Joaquin rivers. During wet years, splittail are more widely distributed and may be abundant, due to more available spawning habitat. For instance, the wet year of 1995 enabled splittail to use habitats that are normally unavailable to them during normal to dry years. During 1995, the Yolo Bypass provided good habitat for spawning splittail and splittail abundance increased. The Bypass provided suitable spawning habitat only because it was a wet year and the Bypass held water later in the year and for a longer duration than is typical. Therefore, when sampling was conducted during 1995, splittail seemed to be abundant and were found in areas, like the Yolo Bypass, that they may not normally be able to use. These managed habitats cannot be relied upon during normal or dry years to provide spawning habitat unless they are consistently managed for the spawning and rearing needs of splittail. During dry years, splittail abundance is restricted by the availability of spawning habitat.

Item 2—We agree that the data demonstrate that splittail are a fecund (fertile) species. However, even fecund species can become low in abundance due to poor habitat conditions for spawning, which may occur during normal or dry years. Young-of-the-year and juvenile survivability recruitment is important to the splittail's recovery. Even though splittail spawn several thousand eggs, not all will reach adulthood. Splittail need good habitat for survivability to spawning age.

Long-lived is a relative term. Compared to an annual species such as the delta smelt, splittail, which live for an average of 5 to 10 years, are long-lived. However, if compared to the green sturgeon, which lives to 20 to 40 years of age, the splittail has a short life span.

The term resilience is also a relative term. Due to the larger body size, splittail may be more resilient than delta smelt to entrainment or impingement, for example, but they are less resilient than larger fish such as salmon. We agree with the statement that more than one year class of splittail may spawn at one time. However, spawning is not always successful. Spawning success is correlated with several factors, including wet years, high Delta outflow, and the presence of flooded vegetation. If these parameters are not present, then the splittail may have low recruitment to the population during that year or years.

Item 3—We disagree with the statement that the splittail range has not decreased dramatically. Historically, splittail were found as far north as Redding on the Sacramento River (at the Battle Creek Fish Hatchery in Shasta County), as far south as the present-day site of Friant Dam on the San Joaquin River, and up the tributaries of the Sacramento River as far as the current Oroville Dam site on the Feather River and Folsom Dam site on the American River. Splittail were captured in southern San Francisco Bay and at the mouth of Coyote Creek in Santa Clara County, but they are no longer present there. The species is, for the most part, now confined to the Delta, Suisun Bay, Suisun Marsh, and the Napa River, reflecting a significant decrease in their historical range. Splittail are able to use the Sutter and Yolo bypasses only in wet years. In addition, these bypasses are managed artificially.

Item 4—We disagree with the statement that splittail are able to endure drought conditions and rebound in wet years. The years 1987 through 1992 were consecutive dry years and demonstrated low abundance indices for splittail. During dry years, splittail abundance is restricted by the availability of spawning habitat. However, 1993 was an above normal water year and splittail abundance indices remained low. During 1993, after the end of the dry and critically dry years of 1987 through 1992, water was diverted to fill up the reservoirs that had been depleted during the drought. Therefore, even though 1993 was an above normal year, the additional water was unavailable for the fish to use.

During the wet years of 1982, 1983, 1986, and 1995, splittail abundance indices were high for all age classes, as sampled in the fall mid-water trawl. During the wet years of 1984, 1996, and 1997, splittail indices were low. Therefore, if wet or above normal year types were the controlling factor, essential habitat for splittail would have been provided and splittail numbers should have been higher in 1984, 1996, and 1997. These data show that splittail do not necessarily have high abundance indices during all wet years. Even though 1984, 1996, and 1997 were wet years, they may not have had the appropriate hydrology, water quality, etc., to support a large spawning class. The timing and magnitude of flow events are likely significant parameters affecting splittail spawning success. Spring flows also have to be of adequate duration and timing to provide the fish with flooded vegetation for escape cover, foraging areas, etc. Weather patterns are too unpredictable to rely on wet years for the recovery of splittail; extended periods of drought would result in low reproduction and population declines. (Also see the response to Issue 6).

Item 5—We agree that splittail are a robust fish. They can obtain a size of over 40 cm total length. However, even though they are a relatively large fish, they are still subject to stress at the water export facilities. Eggs and larvae are still subject to entrainment and impingement at the facilities. The largest losses at the pumping plants occur in wet years when up to millions of splittail young are lost during the spring months. Although splittail salvage better than the delta smelt, which cannot be salvaged at all, recent problems at the export facilities have reduced the salvage of all fish. New species such as the exotic mitten crab have recently posed problems at the export facilities. Salvage of fish was requested to be stopped until the crab problem can be resolved.

Item 6—We disagree with the comment that splittail are not at risk from pumping and that they are taken in proportion to their relative abundance. Although it may appear that splittail are able to handle the stress of salvage at the export facilities, they may not necessarily survive after release. Better studies are needed to determine the extent of latent mortality.

Splittail are more likely to be at risk during pumping, depending on the water year and where the fish are distributed during spawning. During dry years, splittail are concentrated in the few areas that have flooded vegetation that can support spawning. Therefore,

most of the population may be concentrated in one part of the Delta, potentially resulting in more take at the pumps in proportion to the amount of fish in the system. Conversely, more splittail are taken at the pumps during wet years because there is more habitat available for spawning, which may result in more recruitment to that year class. Depending on the distribution of spawning, fish may be taken in disproportion to their overall abundance.

Issue 20: Several respondents stated that programs and agreements like the Bay/Delta Accord, CALFED (a consortium of State and Federal agencies convened to address water issues in California), and VAMP will result in recovery of splittail. Therefore, there is no need to list the species.

Service Response: We agree that the threats associated with the degradation of the Delta may be lessened by the successful implementation of the Bay/Delta Accord, CALFED, Central valley Project Improvement Act (CVPIA), and VAMP. However, to date, the results of these agreements and programs have not been quantified due to subsequent wet years that did not require regulatory intervention for delivery of water for fish species. At this time, it cannot be determined whether these actions have been implemented to an extent that will prevent the splittail from becoming endangered within the foreseeable future.

Issue 21: A respondent stated that we failed to comply with the Regulatory Flexibility Act and Executive Order 12630.

Service Response: The Endangered Species Act requires that listing decisions be made solely on the basis of biological information. The legislative history to the Endangered Species Act amendments of 1982 states:

''The Committee of Conference * * * adopted the House language which requires the Secretary to base determinations regarding the listing or delisting of species 'solely' on the basis of the best scientific and commercial data available to him. As noted in the House Report, economic considerations have no relevance to determinations regarding the status of species and the economic analysis requirements of Executive Order 12291, and such statutes as the Regulatory Flexibility Act and the Paperwork Reduction Act, will not apply to any phase of the listing process.'' (H.R. Conf. Rep. No. 567, 97th Cong., 2d Sess. 12, 19–20 (1982); S. Rep. No. 418, 97th Cong., 2d Sess. 4 (1982)).

In consultation with our Solicitor's Office, we have concluded that the analyses required by the Regulatory Flexibility Act are not applicable to listing determinations.

Regarding Executive Order 12630, Governmental Actions and Interference with Constitutionally Protected Property Rights, the Attorney General has issued guidelines to the Department of Interior (DOI) on implementation of this Executive Order. Under these guidelines, a special rule applies when an agency within the DOI is required by law to act without exercising its usual discretion—that is, to act solely upon specified criteria that leave the agency no discretion.

In this rulemaking context, we might be subject to legal challenge if we considered or acted upon economic data. In these cases, the Attorney General's guidelines state that Takings Implications Assessments (TIAs) shall be prepared after, rather than before, the agency makes the decision upon which its discretion is restricted. The purpose of TIAs in these special circumstances is to inform policy makers of areas where unavoidable fifth amendment taking exposures might exist. Such TIAs shall not be considered in the making of administrative decisions that must, by law, be made without regard to their economic impact.

As described above, Congress required us to list species based solely upon scientific and commercial data indicating whether or not they are in danger of extinction. The Act does not allow us to withhold a listing based on concerns regarding economic impact. The provisions of the guidelines relating to nondiscretionary actions clearly are applicable to the determination of threatened status for the Sacramento splittail.

Summary of Factors Affecting the Species

After thorough review and consideration of all the best scientific and commercial information available, we have determined that the Sacramento splittail should be classified as a threatened species. Procedures found at section 4 of the Act and regulations implementing the listing provisions of the Act (50 CFR part 424) were followed. A species may be determined to be endangered or threatened because of one or more of the five factors described in section 4(a)(1). These factors and their application to the Sacramento splittail (*Pogonichthys macrolepidotus*) are as follows:

A. *The present or threatened destruction, modification, or curtailment of its habitat or range.* The Sacramento splittail, once widely distributed in the Central Valley of California from Redding to the modern-day site of Friant Dam near Fresno, is now primarily restricted to the Estuary due to dams, diversions, dredging, and the diking and filling of historic flood basins. Within this constricted range, splittail have declined by about 62 percent since 1984. However, overall percentage decline over its historical range is much greater. Populations have fluctuated somewhat in the past, with most recruitment taking place in wet years. In wet years since 1978, however, splittail recruitment has declined consistently with catch-per-unit-effort of 12.3, 8.1, 2.0, 1.3, and 0.3 for 1978, 1982, 1983, 1986, and 1993, respectively. The updated data from CDFG demonstrate the same decline by wet years, with 37.3, 15.5, 8.9, 7.3, and 0.6 in 1993. Other wet year data include 1995, 1996, and 1997. These indices are 44.5, 2.1, and 2.6, respectively. However, as stated before, 1995 was a very wet year and there was suitable spawning habitat for splittail in the Estuary. The 1995 data point does not represent a reversal in the decline of the species. Splittail declines are highest (82 percent/83 percent with updated data) in the shallow water Suisun Bay area, the center of its distribution. Therefore, as stated above, wet years are not always indicative of high abundance indices. However, the current data do not indicate a change in this trend.

Delta water diversions and exports currently total about 9 million acre-feet per year, but plans now being prepared could increase exports and diversions in the future. The Federal and State water projects presently export about 6 million acre-feet per year from the Delta when sufficient water is available, and in-Delta agricultural uses result in diversion of about 3 million additional acre-feet per year. We know of 21 major Central Valley Project, State Water Project, or private organization proposals that would result in increased water exports from the Delta, reduced water inflow to the Delta, changes in timing and volume of Delta inflow, or increases in heavy metal contamination of the Delta. These proposed projects or actions include but are not limited to revisions to the Central Valley Project Operations Criteria and Plan, Los Banos Grandes Reservoir, Los Vaqueros Reservoir, South Delta Water Management Program, North Delta Water Management Project, West Delta Water Management Project, Delta Wetlands Corporation Water Storage Project, Folsom Dam Reoperation, Oroville Dam Reoperation, Auburn Dam, Central Valley Project contract renewals and amendments such as those on the American River that include the

Sacramento County water contracts, East Bay Municipal Utilities District water contract, as well as other increases in diversions resulting from the American River Water Forum process. Other water contracts renewals include the Solano County Water District. Contra Costa Water District is currently proposing to increase their diversions for future water supply. The Central Valley Project and State Water Project wheeling purchase agreement, reactivation of the San Luis Drain, Stanislaus-Calaveras River Basin Water Use Program, Suisun Marsh Project Phase Three and Four, Federal Water Project change in diversion point, and State Water Project Pump additions. All of these projects would impact the habitat of the splittail.

Changes in water diversions are most likely at the State Water Project. For the most part, the Federal pumping plant has operated at capacity for many years (pumping at rates up to 4,600 cubic feet per second (cfs)), so increased exports at this plant are unlikely. However, the State Water Project pumping plant and capacity of the State Aqueduct have considerable unused capacity. The State Water Project currently pumps at rates up to 6,400 cfs and plans to increase pumping rates by more than 50 percent. Local private diverters are relatively stable and export up to 5,000 cfs from about 1,800 diversions scattered throughout the Delta. The DWR (1992) reported past and projected State Water Project deliveries from Delta sources during the years of 1962 to 2035. In the 1980s, deliveries ranged from 1.5 million acre-feet to 2.8 million acre-feet. By 2010, deliveries of up to 4.2 million acre-feet are planned.

Since 1983, the proportion of water exported from the Delta during October through March has been higher than in earlier years (Moyle *et al.* 1992). Changes in timing and amounts of exports affect fish migration and spawning habits, as well as operations of upstream water storage facilities. Dampening of peak spring flows by springtime diversions to storage facilities to replenish depleted reservoirs has deleterious effects on estuarine species such as the splittail, which have evolved in a system with periodic spring flooding.

Federal and State water diversion projects in the southern Delta export, by absolute volume, mostly Sacramento River water with some San Joaquin River water. During periods of high export pumping and low to moderate river flows, reaches of the San Joaquin River reverse direction and flow upstream to the pumping plants located in the southern Delta. When total diversion rates are high relative to Delta outflow, the lower San Joaquin River and other channels have a net upstream (i.e., reverse or negative) flow. Out-migrating larval and juvenile fish of many species become disoriented due to reverse flows. Fish, including Sacramento splittail, delta smelt, longfin smelt (*Spirinchus thaleichthys*), and all runs of salmon and steelhead are lost at pumps and to predation at various water facilities and other diversion sites. Because data from State and Federal pumping facilities indicate that splittail migrate upstream to spawn, positive outflows are also important to transport splittail young downstream (Meng 1993).

In recent years, the number of days of reversed San Joaquin River flow have increased (Moyle *et al.* 1992), particularly during the February-June spawning months for splittail. Reverse flows in the San Joaquin River may transport more splittail young towards pumping facilities in the south Delta where the splittail are entrained by pumps and diversions. The survival rate of splittail salvaged from entrainment is unknown. However, salvage operations have been shown to result in 50 percent losses of salvaged fish (Scott Barrow, DFG, pers. comm. 1995) (see factors C and E of this section for more discussion about entrainment and salvage).

With full implementation of the WQCP for the Sacramento-San Joaquin Estuary (described below) we anticipate an overall reduction of the number of days of reverse flow in the lower San Joaquin River during the spring period. Pumping will shift from the spring period to later in the year. This pumping will likely have to be supported by reservoir withdrawals. Reservoir releases in the spring may not be as frequent depending on how much space is available in the reservoirs carried over from the previous year. Increasing demand will also require more support from reservoirs for export, which will alter the flow patterns. Changes in reservoir operations and ramping rates for flood control may affect shallow water spawning habitat along river corridors and exacerbate stranding of splittail.

Estuaries are ecosystems where the mixing zone and salinity levels are determined by interaction of river outflow and tidal action. Splittail are most abundant in the shallow water of Suisun Bay, which is historically associated with the entrapment zone. The young of this species require high zooplankton densities, which are common in the entrapment zone. Production of zooplankton increases when the entrapment zone occupies a large geographic area with extensive shoal regions within the euphotic zone (depths less than 4 meters), such as Suisun and Grizzly bays. Fall mid-water trawl survey data collected by CDFG indicate that 72 percent of the splittail captured from 1967 to 1992 in the Estuary were taken in the shallow water areas of Suisun and Grizzly bays (Meng 1993).

During periods of drought and increased water diversions, the entrapment zone and associated fish populations are shifted farther upstream in the Estuary. During years prior to 1984, the entrapment zone was located in Suisun Bay from October through March (except in months with exceptionally high outflows or during years of extreme drought). From April through September, the entrapment zone usually was located upstream in the river channels. Since 1984, with the exception of the record 1986 flood outflows, the entrapment zone has been located primarily in the river channels during the entire year because of drought and increased water exports and diversions. When located upstream, the entrapment zone is confined to deep river channels where the total surface area is smaller, fewer shoal areas exist, water currents are swifter and more turbulent, and zooplankton productivity is low. In all respects, the upstream river channels are much less favorable for rearing of splittail. Splittail declines since 1984 have been concurrent with an increasing amount and proportion of freshwater diversions that confine the mixing zone to narrow, deep, and less productive channels in the lower rivers.

Recent research indicates that splittail will use the Yolo and Sutter bypasses during the winter and spring months for foraging and spawning (Sommer *et al.* 1997). The bypasses are two extensive floodplain areas used for flood control, agriculture, and wildlife habitat. The bypasses serve as a control outlet for the Sacramento River, which historically flooded large areas of the adjacent valley during high water events in the winter and spring. The water from the Sacramento River is diverted to the bypasses through a passive system of weirs. Water enters the Yolo Bypass from the Sacramento River via the Fremont and Sacramento Weirs. The Sutter Bypass is inundated through the Tisdale Weir.

In 1995, the bypasses provided good habitat for fish, particularly splittail because it was an extremely wet year and the bypasses were flooded for several weeks in March and April. However, the bypasses do not get flooded at all in dry and critically dry years. Therefore, during those years,

when splittail would need the habitat the most, it is not provided by the bypasses.

The Yolo Bypass is inundated whenever the Sacramento River stage at Fremont Weir exceeds 33.5 feet. About 3/4 of the years going back to the mid-1930s have had overflows into the Yolo Bypass. Even though the water was high enough to overtop the Fremont Weir, the water may not have stayed on the Bypass consistently nor long enough to benefit splittail.

Under current water management practices, the bypasses cannot be relied upon throughout any given spawning season to provide habitat for splittail. As mentioned above, water is placed onto the bypasses by overtopping of weirs along the Sacramento River. The flooding of the bypasses is sporadic at best. The volume of water varies from year to year as well as does the time of year when the bypasses are inundated. The water may be placed intermittently on the bypasses, depending on how much rainfall occurs at any given time. For instance, water has been placed onto the Yolo Bypass as early as December and has remained on the Bypass as late as May. Water has also been placed on the Bypass for a short time and drained off. The water could be drained off at some point during the season and then with more heavy rainfall, the bypasses could become flooded again. Therefore, these systems would not provide suitable spawning habitat consistently for splittail. Also, the bypasses do not drain at consistent levels. There are pockets and holes that form which may trap and strand fish as the water drains. During some years, the bypasses do not have enough water or retain water long enough to allow fish to enter the bypasses, spawn, and then grow to a size that will allow them to out-migrate. The artificial systems of the Yolo and Sutter bypasses, as currently managed, cannot be relied upon to recover the splittail. The bypasses provide accessible and suitable splittail spawning habitat only during wet years where the water consistently remains on the bypasses for an extended period of time, as in 1995.

B. *Overutilization for commercial, recreational, scientific, or educational purposes.* Overutilization is not known to be a factor affecting this species. Some scientific collecting is conducted for splittail but these activities do not adversely affect this species. Striped bass anglers report occasional use of splittail as bait, but this usage is thought to have little effect on the species. A small fishery for splittail used to exist in the Sacramento River (Daniels and Moyle 1983, Caywood 1974). However, no recent records of splittail harvest exist, probably because little or no harvest now occurs due to its declines. Records of splittail harvest are also sketchy because identification of this species is often confused with other nongame species. No other recreational or educational uses of this species exist that may affect its abundance.

C. *Disease or predation.* Predation is thought to be a relatively minor factor affecting the Sacramento splittail, especially compared to the other factors discussed in this final rule. Striped bass and other predatory fish are attracted to concentrated prey at fish salvage release sites, such as occur at Clifton Court Forebay. The salvaged fish, including splittail, are collected from holding wells of the salvage facilities, placed in the salvage trucks, transported to the release sites, and deposited in bulk from a pipe running from the truck to a near-shore area, thus resulting in predator attraction. Fifty percent of the released fish are lost (Scott Barrow, CDFG, pers. comm. 1995). These losses are largely due to attraction of predatory fish to the release site of the salvage operations. Splittail and striped bass, however, coexisted for decades in the Estuary and recent declines in splittail have occurred in conjunction with striped bass population declines. Increases in striped bass populations could threaten reduced numbers of splittail. Recently, the CDFG has foregone striped bass stocking or modified their striped bass management because of potential harm to federally listed Sacramento River winter-run chinook salmon and delta smelt.

Susceptibility to disease, due to poor water quality, may be a factor in the decline of splittail. Workers at State and Federal water project facilities in the south Delta have reported high incidences of adult splittail in poor health. The south Delta is dominated by San Joaquin River flow, a large part of which is made up of agricultural drainage. Pesticides (e.g., chlorpyrifos, carbofuran, and diazinon), salts (e.g., sulfates, selenium), and total dissolved solids from this drainage are concentrated by reverse San Joaquin River flows and result in poor water quality (Dennis Westcot, Central Valley Regional Water Quality Control Board, pers. comm.).

D. *The inadequacy of existing regulatory mechanisms.* Regulatory mechanisms currently in effect do not adequately protect the splittail or its habitat. This species is not listed by the State of California.

We are analyzing the potential effects on splittail and other fish and wildlife resources in California as a result of enactment of the CVPIA (Pub. L. 102–575) under the National Environmental Policy Act (NEPA) and the Programmatic Environmental Impact Statement currently under development. The CVPIA may benefit the splittail, but does not adequately protect the species at this time. Two of the stated purposes of the CVPIA are to ''protect, restore, and enhance fish, wildlife, and associated habitats in the Central Valley and Trinity River basins of California'' and ''to contribute to the State of California's interim and long term efforts to protect the San Francisco Bay-Sacramento-San Joaquin Delta Estuary.'' Section 3406(b)(2) dedicates 800,000 acre-feet of Central Valley Project yield annually to implement fish, wildlife, and habitat restoration, and to help federally listed species. The 800,000 acre-feet identified in the CVPIA may be used to meet the DOI's obligations under the Bay-Delta Accord (discussed below). The rest of the water can be used for instream flows, additional Delta outflow, and the other purposes of the CVPIA. Because of the multiple purposes of the CVPIA, flows may be provided at times of the year that may not benefit splittail, such as spawning flows in the fall for salmon. Additionally, because of the need to balance these flows for all uses under the CVPIA, certain spring flows may be less than what is fully needed for spring spawning of splittail. We anticipate that splittail will benefit from implementation of the CVPIA, although the magnitude and timeliness of these protections may be inadequate to prevent further decline of splittail. On November 20, 1997, the DOI announced its decision regarding use of the 800,000 acre-feet of water identified in the CVPIA. The decision is to be implemented for the next 5 years and involves not only upstream actions but also actions in the Delta which may benefit splittail. However, since the Central Valley Project represents only a portion of the water development projects in the Central Valley, the CVPIA is likely insufficient to fully protect splittail at this time.

Protective measures currently being implemented to benefit the delta smelt may benefit the splittail, such as restrictions on pumping under certain conditions. However, the ecological requirements of these species differ, especially with respect to timing of important development stages and habitat uses. Unlike delta smelt, splittail require flooded lowland habitat for spawning and are particularly vulnerable to disturbance or destruction of marshy habitat.

The Suisun Bay area, including Suisun Marsh, is the best known habitat for splittail, but this habitat has been adversely altered by higher salinities in the spring. These higher salinities are caused by operations of reservoirs that divert water to storage as well as exports from the Delta that allow seawater to intrude farther upstream in Suisun Marsh. Prior to the Bay-Delta Accord/WQCP, there were relatively few periods when freshwater outflows of any significance were mandated to be released through the Delta and Suisun Bay for wildlife or fisheries. State and Federal agencies had planned to increase 1991 and 1992 water supplies for out-of-stream uses at the expense of environmental protection of estuarine fish and wildlife resources in the fifth and potentially sixth years of drought (Morat 1991). Because of significantly higher than normal precipitation and subsequent higher instream flows after March 1991, a State agency request for relaxation of Delta water quality standards was withdrawn.

Subsequently, on December 15, 1994, the Federal government, the State of California, and urban, agricultural and environmental interests agreed to the Principles for Agreement on a comprehensive, coordinated package of actions designed to provide interim protection to the San Francisco Bay and Sacramento-San Joaquin River Delta Estuary. That agreement is referred to as the 1994 Bay-Delta Accord (Accord). The Accord was recently extended to December 15, 1999. The Accord established parameters to protect the beneficial uses of the Bay-Delta Estuary. Among these beneficial uses are objectives to ensure adequate Delta outflow for the maintenance of suitable habitat for various life stages of aquatic organisms and objectives for export limits to protect the habitat of estuarine-dependent species and reduce their entrainment at the major export pumps in the southern Delta.

The X2 standard provides outflows to maintain low salinity (2 parts per thousand) habitat at three distinct areas in the Bay-Delta: 1) the confluence of the Sacramento and San Joaquin rivers, 2) Chipps Island, and 3) Roe Island. Compliance of this standard will provide variability for aquatic organisms and aid in their recovery. The E/I ratio establishes a combined export rate (Clifton Court Forebay inflow plus export at the Tracy Pumping Plant) based on the best available estimate of the Eight River Index. When the estimate of the Eight River Index is ultimately made, the export facilities may then pump a set percentage of Delta inflow. Although these parameters will likely protect fish and wildlife, they have not been adequately tested over the past 4 years due to the extreme wet conditions.

Present regulatory processes do not ensure that water inflows to Suisun Bay and the western Estuary will be adequate to maintain the mixing zone near or in Suisun Bay to benefit splittail. The SWRCB has the authority to condition or require changes in the amount of water inflow and the amount of water exported or diverted from the Delta. In testimony given before the SWRCB's Water Quality/Water Rights Hearings in 1987, one of our biologists expressed concern for several Delta species, including splittail (Lorentzen 1987). The SWRCB did not take regulatory or legal action to protect this fish or its habitat during the following 4 years. On May 1, 1991, the SWRCB adopted the WQCP for Salinity for the San Francisco Bay-Sacramento-San Joaquin Delta Estuary (1991 Bay/Delta Plan). On September 3, 1991, under provisions of the Clean Water Act, the USEPA disapproved certain water quality standards due to the SWRCB's failure to adopt criteria to protect estuarine habitat. In April 1992, the Governor of California announced a new water policy that included a directive to the SWRCB to establish ''interim measures'' to reverse the decline of fishes in the Bay and Delta. Accordingly, the SWRCB released an interim water quality plan (Draft Decision 1630) in December 1992 that immediately was suspended by the Governor. In 1993, the USEPA began the process of forming replacement standards for those portions of the 1991 Bay/Delta Plan that were disapproved.

Before USEPA's final rule on Water Quality Standards for Surface Waters of the Sacramento River, San Joaquin River, and San Francisco Bay and Delta became effective on December 14, 1994, and as a result of Bay-Delta Accord that was signed on December 15, 1994, the SWRCB issued and adopted Water Rights Order 95–6. The protections contained in this Water Rights Order were determined to be roughly equivalent to the protections in USEPA's final rule on water quality standards, and USEPA's rule was withdrawn. Although the SWRCB has issued a draft Environmental Impact Report (EIR), no long term implementation plan has been developed or actually implemented for the new water quality plan. Substantial opposition exists to certain implementation measures identified in EIR. Institutional guarantees of compliance have been lacking in the past and are needed in the future before existing mechanisms can contribute to protection of this species. Records show that the previous salinity standards contained in the SWRCB's Water Rights Decision 1485 were inconsistently implemented and frequently violated.

Among other things, the Bay-Delta Accord was intended to provide for increased flexibility in the water project operations to respond to ecological needs. Appropriate use of this increased flexibility may have demonstrated that the established regulatory mechanisms were sufficient to protect splittail. However, even though splittail were proposed for listing before the Bay-Delta Accord was signed, water project operations have rarely been changed to provide protection for splittail. In 1995, for example, a wet year that afforded opportunities to significantly reverse the decline of splittail while maintaining water supply, more than 6.3 million juvenile splittail were entrained at the CVP and SWP facilities in 2 months from late April to late June. Of these fish, at least 50 percent were lost due to transport and release. Predation in Clifton Court Forebay, inefficiency in screening fish from diversion facilities, and handling most likely increased this percentage. Despite the availability of the mechanism for increased flexibility in project operations provided by the Bay-Delta Accord, operations of the CVP and SWP were changed for only one 3-day period in late June of 1995 to minimize entrainment of splittail. Thus, an opportunity to significantly increase abundance and distribution of splittail, and the opportunity to reverse the decline of the species was lost.

As a direct result of a Framework Agreement, the Federal and State governments established the CALFED Bay-Delta Program (Program). This Program is a cooperative effort of the DOI, the U.S. Department of Commerce, the USEPA, the California Environmental Protection Agency, and the California Resources Agency, with the involved public formally participating through the Bay-Delta Advisory Council. The mission of the Program is to develop a long term comprehensive plan that will restore ecological health and improve water management for all beneficial uses of the Bay-Delta system. The plan will specifically address fish and wildlife protection, water supply reliability, levee stability, and water quality issues in the Delta. We are an active participant in the Program and we believe that the eventual implementation of the plan will contribute to the protection and recovery of the Sacramento splittail. However, the plan is not yet developed;

we cannot evaluate specific conservation measures until they have been identified, described, and committed to in an approved final plan.

As a result of the Bay-Delta Accord, a program was established to implement non-flow related actions to benefit fish and wildlife resources. This program is known as Category III. The Category III program is funded by Federal, State, and non-governmental organizations and was funded with $60 million annually for the first 3 years of the Bay-Delta Accord. There was approximately $10 million dollars funded in the first year by the Metropolitan Water District (MWD). The MWD contributed the same amount in the second year, with approximately $2–4 million contributed by other water districts and agencies. In November 1996, California voters passed Proposition 204, which provided State funds for the Category III activities as well as other CALFED activities. In 1997 the Federal government passed an $85 million appropriation for Category III activities and CALFED functions. In the Fall of 1997, CALFED awarded $60.6 million dollars toward proposals under the Category III program. Some of these proposals will benefit splittail through habitat enhancement or restoration. Some of these projects have been implemented. However, due to the time frame required to see if the project has met its objective, that is, to provide suitable spawning habitat for splittail, we cannot determine if these projects will be successful. However, because Category III projects are not intended to enhance flow conditions in the Delta or its tributaries, it cannot provide needed flows.

E. *Other natural or manmade factors affecting its continued existence.* Splittail are vulnerable to natural events, such as drought, because of the consistent decline in population indices and severely constricted range and distribution. Drought will reduce the available spawning area for the splittail because of reduced instream flows. Because the range is already restricted and the population has declined, a prolonged natural event such as drought (compounded by exports and diversions described in Factor A) could endanger the splittail.

Unscreened or inefficiently screened municipal, agricultural, and industrial water diversions and other water facilities are a significant problem for the splittail. It is estimated that there are currently over 1800 unscreened diversions in the Delta. Screens are currently designed for striped bass and salmonids. Approach velocities and mesh sizes are therefore not appropriate for splittail. Behavioral barriers (louver screens) at the State and Federal salvage facilities that were designed using striped bass and salmonid criteria, also are not appropriate for splittail. Release sites for salvaged fish attract predators, likely resulting in low survivorship overall (Lloyd Hess, BOR, pers. comm. 1995). Also, it is likely that few young survive salvaging at the Federal and State pumping plants because juveniles of most fish species are more delicate than adults.

Poor water quality also may adversely affect splittail, through direct exposure to toxins, which increases vulnerability to disease as described above in Factor C, and depletion of zooplankton and invertebrate food sources. All major rivers that are tributary to the Estuary are exposed to large volumes of agricultural and industrial chemicals that are applied in the Central Valley watershed (Nichols *et al.* 1986). Agricultural chemicals and their residues, as well as chemicals originating in urban runoff, find their way into the rivers and Estuary. Approximately 10 percent of the total pesticide use in the United States occurs in the Sacramento and San Joaquin River watersheds (Kuivila and Foe 1995). Recently, high concentrations of organophosphate and carbamate pesticides from agricultural uses have been documented entering the Estuary. These pesticides are acutely and chronically toxic to zooplankton and fishes as far west as Martinez in Suisun Bay and as far south as Vernalis on the San Joaquin River (Foe 1995, Bailey *et al.* unknown date). The periods of pesticide use coincide with the timing of migration, spawning, and early development of splittail. During rainfall runoff events, acutely toxic pulses of pesticides move down the rivers and through the Estuary with remarkable persistence and relatively little dilution (Kuivila and Foe 1995).

Toxicology studies of rice field irrigation drain water of the Colusa Basin Drainage Canal have documented significant toxicity of drain water to striped bass embryos and larvae, *Oryzias latipes* larvae (in the Cyprinodontidae family), and opossum shrimp, which is the major food organism of striped bass larvae and juveniles (Bailey *et al.* 1991), as well as all age classes of splittail. This drainage canal flows into the Sacramento River just north of the City of Sacramento. The majority of drain water samples collected during April and May 1990 were acutely toxic to striped bass larvae (96-hour exposures); this was the third consecutive year rice irrigation drain water from the Colusa Basin was acutely toxic (Bailey *et al.* 1991). Splittail may be similarly affected by agricultural and industrial chemical runoff, particularly because, like striped bass, adults migrate upriver to spawn and young rear upriver until waters recede in late spring.

Some heavy metal contaminants have been released into the Estuary from industrial, urban, and mining enterprises. While the effects of these contaminating compounds on splittail larvae and their zooplankton food resources are not well known, the compounds could adversely affect survival. In addition, increases in urban development in the Sacramento Valley will continue to result in concurrent increases in urban runoff. Selenium has been found in aquatic organisms (Saiki and Lowe 1987, Henderson *et al.* 1995) and fish species in the San Joaquin River watershed (Nakamoto and Hassler 1992). Selenium has been shown to cause reproductive failure, developmental defects, and mortality of fish species (Hermanutz 1992, Skorupa *et al.* 1996).

In recent years, untreated discharges of ship ballast water has introduced exotic aquatic species to the Estuary ecosystem (Carlton *et al.* 1990). Several exotic species may adversely affect the splittail. An Asian clam (*Potamocorbula amurensis*), introduced as veliger larvae in 1986, was first discovered in Suisun Bay during October 1986. By June 1987, the Asian clam was widespread in Suisun, San Pablo, and San Francisco bays irrespective of salinity, water depth, and sediment type at densities greater than 10,000 individuals per square meter. Asian clam densities declined to 4,000 individuals per square meter as the population aged during the year (Carlton *et al.* 1990). Persistently low river outflow and concomitant elevated salinity levels may have contributed to this species' population explosion (Carlton *et al.* 1990). The Asian clam could potentially play an important role in affecting the phytoplankton dynamics in the Estuary. The clam may have an effect on higher trophic levels by decreasing phytoplankton biomass.

The Chinese mitten crab (*Eriocheir sinensis*), has also been recently introduced to the Delta, either by deliberate release to establish a fishery or through accidental release via ballast water. The Chinese mitten crab has interfered with the ability to effectively salvage fish at the export facilities by clogging the internal piping.

Historically, *Eurytemora affinis*, the native euryhaline copepod, has been the most important food for larval fishes in the Estuary. Three non-native species of euryhaline copepods (*Sinocalanus*

doerrii, *Pseudodiaptomus forbesi*, and *P. marinus*) became established in the Delta between 1978 and 1987 (Carlton *et al.* 1990), while *E. affinis* populations have declined since 1980. It is not known if the exotic species have displaced *E.* affinis or whether changes in the estuarine ecosystem now favor *S. doerrii* and the two *Pseudodiaptomus* species (Moyle *et al.* 1989). *Sinocalanus doerrii* is difficult for larval fishes to catch because of its fast swimming and effective escape response (Meng and Orsi 1991). Reduced feeding efficiency and ingestion rates weaken and slow the growth of splittail young and make them more vulnerable to starvation or predation.

We have carefully assessed the best scientific and commercial information available regarding past, present, and future threats faced by this species in this listing determination. Sacramento splittail have declined by 62 percent over the last 15 years. This species has been effectively extirpated from the majority of its range and is now vulnerable to numerous threats in the Estuary as discussed above. Because Sacramento splittail are long-lived, their decline has been gradual, and extinction is not imminent, listing the splittail as endangered would not be appropriate. Although this species is not in imminent danger of extinction, it is likely to become endangered in the foreseeable future if present threats and current population trends continue. Therefore, based on the evaluation of all available information on abundance, present distribution, and threats to this species, we have determined that listing the Sacramento splittail as threatened is appropriate at this time. Critical habitat is not designated for reasons discussed in the ''Critical Habitat'' section of this rule.

Critical Habitat

Critical habitat is defined in section 3 of the Act as—(i) the specific areas within the geographical area occupied by a species, at the time it is listed in accordance with section 4 of the Act, on which are found those physical or biological features (I) essential to the conservation of the species and (II) which may require special management considerations or protection and; (ii) specific areas outside the geographical area occupied by a species at the time it is listed, upon determination that such areas are essential for the conservation of the species. ''Conservation'' as defined in section 3(3) of the Act means the use of all methods and procedures needed to bring the species to the point at which listing under the Act is no longer necessary.

Section 4(a)(3) of the Act, and implementing regulations (50 CFR 424.12) require that, to the maximum extent prudent and determinable, the Secretary designate critical habitat at the time the species is listed. The regulations (50 CFR 424.12(a)(1)) state that designation of critical habitat is not prudent when one or both of the following situations exist—(1) the species is threatened by taking or other human activity, and identification of critical habitat can be expected to increase the degree of threat to the species, or (2) such designation of critical habitat would not be beneficial to the species. We have determined that designation of critical habitat for the Sacramento splittail is not prudent.

Critical habitat receives consideration under section 7 of the Act. Section 7(a)(2) requires Federal agencies to consult with the Service to ensure that any action they carry out, authorize, or fund does not jeopardize the continued existence of a federally listed species or destroy or adversely modify designated critical habitat. The Service's implementing regulations (50 CFR part 402) define ''jeopardize the continuing existence of'' and ''destruction or adverse modification of'' in very similar terms. To jeopardize the continuing existence of a species means to engage in an action ''that reasonably would be expected, directly or indirectly, to reduce appreciably the likelihood of both the survival and recovery of a listed species by reducing the reproduction, numbers, or distribution of that species.'' Destruction or adverse modification of habitat means a ''direct or indirect alteration that appreciably diminishes the value of critical habitat for both the survival and recovery of a listed species in the wild.'' Common to both definitions is an appreciable detrimental effect to both the survival and recovery of a listed species.

For any listed species, an analysis to determine jeopardy under section 7(a)(2) would consider impacts to the species resulting from impacts to habitat. Therefore, an analysis to determine jeopardy would include an analysis closely parallel to or, for the splittail, equivalent to an analysis to determine adverse modification of critical habitat. For the Sacramento splittail, any modification to suitable habitat within the species' range has the potential to affect the species. Actions that may affect the habitat of the splittail include, but are not limited to—(1) reduction of fresh water flows, (2) degradation of water quality, (3) reduction in the quality or quantity of flooded vegetation, (4) alteration of shallow water areas containing submergent (under water) and/or emergent (above the water surface) vegetation, and (5) construction of structures that interfere with migration patterns or block free access to spawning or rearing areas. Although the splittail is a wide ranging species, actions affecting habitat can have relatively large impacts to the population. For example, an activity that destroys or degrades, or blocks access to, an important spawning site could result in reproductive failure of a significant portion of the population affecting population size and age structure in following years. For the Sacramento splittail, we have determined that, were critical habitat designated, it would include no areas that would not be subject to consultation under the jeopardy standard. Moreover, we have determined that the level of habitat impact necessary to result in a determination of destruction or adverse modification of critical habitat (were we to designate critical habitat for the splittail) would also result in a determination of jeopardy to the species. Therefore, were critical habitat to be designated for the splittail, no additional section 7 consultations beyond those caused by the listing itself would take place, nor would the practical result of any such consultations differ.

To date, we have prepared 284 conference reports for the Sacramento splittail for projects involving changes in hydrology, availability of spawning habitat, migratory cues, and other behavioral patterns as well as potential increase in entrainment. Three of these conferences resulted in initial draft jeopardy determinations. These draft jeopardy determinations provide evidence that, by their very nature, impacts to splittail habitat that would result in a determination of adverse modification would result in a determination of jeopardy to the species. For these projects, the habitat impacts were the primary basis for the jeopardy determinations.

The three projects that resulted in initial draft jeopardy conference reports included the proposed Delta Wetlands Project (March 1996) (this project has since been modified to avoid jeopardy), proposed modifications to the south Delta Temporary Barrier Program (January 1997), and the proposed Interim South Delta Program (April 1998). The consultations and conferences for these projects addressed the adverse effects on the delta smelt, its critical habitat, and the Sacramento

splittail. With respect to each project, we concluded that it was likely to jeopardize the continued existence of both species, and to cause the destruction or adverse modification of the delta smelt's critical habitat. In each of these examples, we expressly found that an activity that would destroy or adversely modify critical habitat for the delta smelt would also jeopardize its continued existence. In each case, the project's primary impacts to the splittail, and the primary bases for our conclusion that the splittail would be jeopardized by the project, were habitat impacts. Moreover, had critical habitat been proposed for the splittail, neither these conferences nor any of the others regarding the splittail would have resulted in a finding of adverse modification without a complementary finding of jeopardy.

Apart from section 7, the Act provides no additional protection to lands designated as critical habitat. Designating critical habitat does not create a management plan for the areas where the species occurs; does not establish numerical population goals or prescribe specific management actions (inside or outside of critical habitat); and does not have a direct effect on areas not designated as critical habitat.

A designation of critical habitat that includes private lands would only affect actions where a Federal nexus is present and would not confer any additional benefit beyond that already provided through section 7 consultation under the jeopardy standard. Designation of critical habitat on private lands could, however, result in a detriment to the species. The regulatory effect of critical habitat designation is often misunderstood by private landowners, particularly those whose property boundaries are included within a general description of critical habitat for a species. In the past, landowners have mistakenly believed that critical habitat designation will be an obstacle to development and impose restrictions on the use of their property. In some cases, landowners have believed that critical habitat designation is an attempt by the government to confiscate their private property. As a result of this misunderstanding, critical habitat designation has sometimes reduced private landowner cooperation in efforts to conserve species listed in California. Because the splittail is found in some rivers and tributaries flowing through private lands, the cooperation of private landowners is imperative to conserve the splittail. Controversy resulting from critical habitat designation has been known to reduce private landowner cooperation in the management of other listed species (e.g., the northern spotted owl (*Strix occidentalis caurina*) in Oregon, Washington, and California).

We are concerned that designating critical habitat increases the likelihood of intentional acts of vandalism and habitat destruction due to widespread public misunderstanding of critical habitat. Within the general area where splittail occur, we have documented a number of cases where habitat for listed species was deliberately vandalized or destroyed to avoid dealing with endangered species regulatory issues. Vernal pools, which provide habitat for several listed and candidate species, including the giant garter snake (*Thamnophis gigas*), have been affected negatively by landowners rerouting stream courses in order to eliminate potential endangered species regulatory effects (F. Muth, Fish and Wildlife Service, pers. comm.). We have documented the deliberate destruction of habitat for giant garter snakes (K. Hornaday, Fish and Wildlife Service, pers. comm.) and valley elderberry longhorn beetles (*Desmocerus californicus dimorphus*) (B. Cordone, Fish and Wildlife Service, pers. comm.; S. Pearson, Fish and Wildlife Service, pers. comm.; D. Weinrich, Fish and Wildlife Service, pers. comm.; B. Twedt, Fish and Wildlife Service, pers. comm.) along irrigation canals within the same general areas where the splittail occurs. We are concerned that designation of critical habitat for the splittail may precipitate further habitat destruction affecting splittail and the other species in these habitats.

We acknowledge that in some situations critical habitat designation may provide some value to the species by notifying the public about areas important for the species' conservation and calling attention to those areas in special need of protection. However, in the case of the splittail, we have already spent enormous effort on public outreach and education and believe that critical habitat designation for the splittail would not provide any further notification or education benefit. Subsequent to the publication of the proposed rule to list the splittail, we initiated an extensive public outreach strategy to inform and educate the general public and interested parties within the range of the species. We sent out press releases to local newspapers, contacted elected officials, Federal, State, and county agencies, and interested parties, including private landowners. We also provided the Recovery Plan for the Sacramento/San Joaquin Delta Native Fishes that addresses eight fish species including the splittail to these same interested parties. We will continue to inform and educate the public and private landowners within the range of the species through the dissemination of additional information including copies of the final rule, fact sheets, and question and answer sheets explaining relevant parts of the Act to the parties listed above.

In addition, up-to-date information about the splittail and its habitat, as well as detailed information about the Bay-Delta ecosystem and other areas critical to conserving species that utilize the Bay-Delta, is already widely disseminated to private landowners and to entities or individuals that may propose projects that could affect splittail. As discussed above in Factor E in the ''Summary of Factors Affecting the Species'' section, the CALFED Program is a cooperative effort to develop a long term comprehensive plan to restore ecological health and improve water management for all beneficial uses of the Bay-Delta system. In the process of developing a long term plan, CALFED has held numerous public meetings, workshops, and hearings throughout the State to receive information from the public, as well as to inform the public about the program's goals and ecological needs of the species, including splittail. CALFED maintains an extensive mailing list in order to keep landowners, local, State, and Federal entities, as well as the interested public, apprised of CALFED's actions and the ecological needs of the species that utilize the Bay-Delta ecosystem and other areas necessary for the conservation of species, including splittail.

Regarding any potential benefit provided by informing other Federal and State agencies about the splittail, the knowledge of the range and habitat requirements for this species is well known by Federal agencies, as is evidenced by the 284 conference reports we have prepared addressing the splittail. The Service's Sacramento Field Office stores information about the ranges of listed and other sensitive species by USGS 7½ quad maps in a database. When a Federal agency notifies the Service about a potential project they may authorize, fund, or carry out, the Service does a database search and provides a list of species that may be affected by the proposed action. The plants and animals that are included on the species list are those that may be affected, either directly or indirectly, by the proposed project. Fish and other aquatic species including the splittail appear on the species list if they are in the same watershed as the proposed action. In other words,

splittail appear on a species list if the action occurs anywhere in the Central Valley of California, including all rivers and the tributaries that drain to these rivers. This database is updated if new information about a species is made available. Use of this database provides a superior means of providing information about a species' location to a Federal agency.

Because of the sensitivity of the water community in California, State, Federal, and private water users are also very aware of the species range and habitat requirements. This knowledge extends to local reclamation boards, county boards of supervisors, individual water districts as well as a large number of private individuals. Private consultants, who provide the biological expertise for all of the above mentioned publics, have developed extensive knowledge of the current range, habitat requirements, and potential effects of project proposals on the splittail. Designation of critical habitat would not cause us to provide different or additional information to these entities for the purposes of preserving and/or recovering the species.

We have evaluated the potential notification and education benefit offered by critical habitat designation and find that, for the splittail, there would be no additional benefit over the current outreach and interagency coordination process currently in place. Notification and education can be conducted more effectively by working directly with landowners and communities through the recovery implementation process and, where a Federal nexus exists, through section 7 consultation and coordination. Critical habitat designation for the splittail would provide no further notification or education benefit. In addition, these existing processes preclude problems and potential risks associated with confusion and misunderstanding that may accompany a critical habitat designation.

Critical habitat designation can also aid in the development of a species' recovery plan by identifying the areas needing protection or requiring special management considerations. However, we have already developed the Recovery Plan for the Sacramento/San Joaquin Delta Native Fishes that addresses eight fish species, including the Sacramento splittail. The Recovery Plan identifies the important habitat areas for the splittail.

In summary, we have determined that the designation of critical habitat for the splittail would not be beneficial to the species. For the splittail, the section 7 consultation process will produce a jeopardy analysis that has results equivalent to a critical habitat adverse modification analysis. We already provide private landowners and agencies with up-to-date information on important areas for the splittail. Federal agencies are already engaged in splittail conservation efforts, and we will continue to provide them with up-to-date information on areas important for splittail conservation. We have completed recovery planning for the species, and we will review the information in the recovery plan periodically to determine if updates and revisions are needed. Finally, even if designation of critical habitat for the splittail would provide some small, incremental benefit to the species, that benefit is outweighed by the increased risk of (1) controversy that would hamper recovery efforts or (2) vandalism. Based on this analysis, we conclude that designation of critical habitat for the Sacramento splittail is not prudent.

Available Conservation Measures

Conservation measures provided to species listed as endangered or threatened under the Act include recognition, recovery actions, requirements for Federal protection, and prohibitions against certain activities. Recognition through listing encourages and results in conservation actions by Federal, State, and private agencies, groups, and individuals. The Act provides for possible land acquisition and cooperation with the States and requires that recovery actions be carried out for all listed species. We initiate such actions following listing. The protection required of Federal agencies and the prohibitions against taking and harm are discussed, in part, below.

Section 7(a) of the Act, as amended, requires Federal agencies to evaluate their actions with respect to any species that is proposed or listed as endangered or threatened and with respect to its critical habitat, if any is being designated. Regulations implementing this interagency cooperation provision of the Act are codified at 50 CFR part 402. Section 7(a)(4) of the Act requires Federal agencies to confer informally with us on any action that is likely to jeopardize the continued existence of a proposed species or result in destruction or adverse modification of proposed critical habitat. If a species is subsequently listed, section 7(a)(2) requires Federal agencies to insure that activities they authorize, fund, or carry out are not likely to jeopardize the continued existence of such a species or to destroy or adversely modify its critical habitat. If a Federal action may affect a listed species or its critical habitat, the responsible Federal agency must enter into consultation with us.

Federal actions that may affect the splittail include, but may not be limited to, those actions authorized, carried out, or funded by the Corps, BOR, National Marine Fisheries Service (NMFS), FERC, and USEPA. The Corps funds projects and issues permits for water pumping and diversion facilities, levee construction or repair, bank protection activities, deep-water navigation channel dredging and dredge spoil disposal projects, sand and gravel extraction, marina and bridge construction, diking of wetlands for conversion to farmland, and tidal gate or barrier installation. The BOR and DWR construct, operate, and manage water storage and delivery facilities. The FERC licenses and re-licenses hydroelectric power facilities, that manipulate instream flows, in the tributaries to the Sacramento and San Joaquin rivers. The USEPA reviews State water quality standards and promulgates replacement standards pursuant to the Clean Water Act if State standards are found to be inadequate. In 1991, USEPA disapproved portions of the SWRCB's WQCP for salinity in the Estuary. Subsequent to that decision, the USEPA developed new water quality standards to replace those that were disapproved. The USEPA published a proposed rule in December of 1993 requesting comments. Prior to finalizing the final rule, the State developed new water quality standards and proposed a new WQCP, 95–1WR, which was implemented, in-part, through Water Rights Order 95–6. The USEPA determined that the State's standards provided equivalent or better protection and has withdrawn the Federal proposal. The State is in the process of developing an implementation plan to fully achieve the goals of the WQCP, and is hearing testimony on many issues.

The Sacramento splittail proposed rule was published January 6, 1994. During the last 4 years, 284 conference opinions have been developed for projects proposed by various Federal agencies. We are prepared to adopt all conference opinions as final biological opinions for the Sacramento splittail, provided that the respective agencies request the adoption in writing and the reinitiation criteria listed under 50 CFR 402.16 do not apply. If there have been no significant changes in an action as planned or in the information used during the conference, we will confirm the conference opinion as the biological opinion on the project, and no further section 7 consultation will be necessary.

However, reinitiation of formal consultation is required where discretionary Federal agency involvement or control over the action has been maintained (or is authorized by law) and if—(1) the amount or extent of incidental take is exceeded; (2) new information reveals that the agency action may affect listed species or critical habitat in a manner or to an extent not considered in this opinion; (3) the agency action is subsequently modified in a manner that causes an effect to the listed species or critical habitat that was not considered in this opinion; or (4) a new species is listed or critical habitat designated that may be affected by the action. In instances where the amount or extent of incidental take is exceeded, any operations causing such take must cease pending reinitiation.

Under section 4 of the Act, listing the splittail provides additional impetus for development and implementation of a recovery plan to bring together Federal, State, and private efforts to develop conservation strategies for this species. We convened the Delta Native Fishes Recovery Team to prepare a recovery plan for declining native fishes in the Estuary. The draft recovery plan developed a framework for agencies to coordinate activities and cooperate with each other in conservation efforts. It also set recovery priorities and estimated costs of various tasks necessary to accomplish recovery goals. Site-specific management actions necessary to achieve survival and recovery of splittail and other fishes native to the Estuary ecosystem were also described in this draft plan. The draft recovery plan was released for public review and comment on January 8, 1995 (60 FR 2155). Notice of availability of the final plan was published in the **Federal Register** on November 26, 1996 (U.S. Fish and Wildlife Service 1996).

The Act and implementing regulations set forth a series of general prohibitions and exceptions that apply to all threatened wildlife. The prohibitions, codified at 50 CFR 17.21 and 17.31, in part, make it illegal for any person subject to the jurisdiction of the United States to take (including harass, harm, pursue, hunt, shoot, wound, kill, trap, capture, collect, or attempt any such conduct), import or export, transport in interstate or foreign commerce in the course of commercial activity, or sell or offer for sale in interstate or foreign commerce any listed species. It also is illegal to possess, sell, deliver, carry, transport, or ship any such wildlife that has been taken illegally. Certain exceptions apply to agents of the Service and State conservation agencies.

Our policy, as published in the **Federal Register** on July 1, 1994 (59 FR 34272), is to identify to the maximum extent practicable at the time a species is listed those activities that would or would not constitute a violation of section 9 of the Act if a species is listed. Section 9 of the Act prohibits certain activities that directly or indirectly affect listed species. The intent of this policy is to increase public awareness of the effect of a proposed listing on proposed and ongoing activities within a species' range. We believe that, based on the best available information, the following actions will not result in a violation of section 9, provided these actions are carried out in accordance with any existing regulations and permit requirements:

(1) Routine levee road maintenance;

(2) Weed and brush control on levees above the mean higher high water mark or the ordinary high water mark;

(3) Aquatic recreational activities;

(4) Actions that may affect splittail that are authorized, funded or carried out by a Federal agency, when the action is conducted in accordance with an incidental take statement issued by the Service pursuant to section 7 of the Act, and;

(5) Actions that may affect splittail that are not authorized, funded or carried out by a Federal agency, when the action is conducted in accordance with an incidental take permit issued by the Service pursuant to section 10(a)(1)(B) of the Act.

Activities that we believe could potentially harm the Sacramento splittail and result in ''take'' include, but are not limited to:

(1) Diversion of water from any river or stream or other water course that results in the entrainment, injury or death of splittail, including stranding of eggs, larvae, juveniles or adults; or diversions that result in the degradation of waters containing splittail;

(2) Levee slope and bank protection that occurs below the mean higher high water mark or the ordinary high water mark of a water body that results in the loss of shallow water habitat used by splittail for spawning and rearing;

(3) Dredging in any river or stream or other water body that contains Sacramento splittail including dredging in flooded areas where splittail may be spawning, or dredging that results in the degradation of waters containing splittail;

(4) Discharge of fill material into a water body supporting splittail that results in the destruction or degradation of spawning and rearing habitat, substrate composition, water salinity, water quality, channel stability, or migratory corridors;

(5) Discharge or dumping of toxic chemicals, pesticides, organic wastes or other pollutants into a water body supporting splittail, or discharge or dumping of pollutants that results in the degradation of a water body containing splittail; and

(6) Unauthorized collection of splittail.

Questions regarding whether specific activities will constitute a violation of section 9 should be directed to the Field Supervisor of the Service's Sacramento Office (see **ADDRESSES** section).

Permits may be issued to carry out otherwise prohibited activities involving threatened wildlife species under certain circumstances. Regulations governing permits for threatened species are codified at 50 CFR 17.32. Permits for threatened species are available for scientific purposes, to enhance the propagation or survival of the species, and/or for incidental take in connection with otherwise lawful activities. For threatened species, permits are available for zoological exhibition, educational purposes, or special functions consistent with the purposes of the Act. Requests for copies of the regulations on listed species and inquiries regarding permits may be addressed to the U.S. Fish and Wildlife Service, Ecological Services, Endangered Species Permits, 911 NE 11th Avenue, Portland, Oregon 97232–4181 (telephone 503–231–6241; facsimilie 503–231–6243).

National Environmental Policy Act

We have determined that Environmental Assessments and Environmental Impact Statements, as defined in the National Environmental Policy Act of 1969, need not be prepared in connection with regulations adopted pursuant to section 4(a) of the Endangered Species Act of 1973, as amended. We published a notice outlining our reasons for this determination in the **Federal Register** on October 25, 1983 (48 FR 49244).

Paperwork Reduction Act

This rule does not contain any new collections of information other than those already approved under the Paperwork Reduction Act, 44 U.S.C. 3501 *et seq.*, and assigned Office of Management and Budget clearance number 1018–0094. An agency may not conduct or sponsor, and a person is not required to respond to, a collection of information unless it displays a currently valid control number. For additional information concerning

permit and associated requirements for threatened species, see 50 CFR 17.32.

References Cited

A complete list of all references cited in this rule are available upon request from the Sacramento Fish and Wildlife Office (see **ADDRESSES** section).

Authors

The primary author of this rule is Michael G. Thabault, U.S. Fish and Wildlife Service, Sacramento Office (see **ADDRESSES** section).

List of Subjects in 50 CFR Part 17

Endangered and threatened species, Exports, Imports, Reporting and recordkeeping requirements, Transportation.

Regulation Promulgation

Accordingly, part 17, subchapter B of chapter I, title 50 of the Code of Federal Regulations, is amended as set forth below:

PART 17—[AMENDED]

1. The authority citation for part 17 continues to read as follows:

Authority: 16 U.S.C. 1361–1407; 16 U.S.C. 1531–1544; 16 U.S.C. 4201–4245; Pub. L. 99–625, 100 Stat. 3500, unless otherwise noted.

2. In § 17.11(h) add the following to the List of Endangered and Threatened Wildlife in alphabetical order under ''FISHES:'

§ 17.11 Endangered and threatened wildlife.

* * * * *

(h) * * *

Species		Historic range	Vertebrate population where endangered or threatened	Status	When listed	Critical habitat	Special rules
Common name	Scientific name						
FISHES							
*	*	*	*	*	*		*
Splittail, Sacramento	*Pogonichthys macrolepidotus.*	U.S.A. (CA)	Entire	T	656	NA	NA
*	*	*	*	*	*		*

Dated: February 1, 1999.

Jamie Rappaport Clark,

Director, Fish and Wildlife Service.

[FR Doc. 99–2867 Filed 2–5–99; 8:45 am]

BILLING CODE 4310–55–P

Proposed Rules

Federal Register
Vol. 64, No. 25
Monday, February 8, 1999

This section of the FEDERAL REGISTER contains notices to the public of the proposed issuance of rules and regulations. The purpose of these notices is to give interested persons an opportunity to participate in the rule making prior to the adoption of the final rules.

DEPARTMENT OF THE TREASURY

Office of Thrift Supervision

12 CFR Part 584

[No. 99–4]

RIN 1550–AB26

Regulated Activities; Exempt Savings and Loan Holding Companies

AGENCY: Office of Thrift Supervision, Treasury.

ACTION: Notice of proposed rulemaking.

SUMMARY: The Office of Thrift Supervision (OTS) proposes to amend its regulations to clarify the circumstances under which certain multiple savings and loan holding companies are able to engage in the same activities as unitary holding companies. In accordance with the governing statute and regulations, multiple holding companies are exempt from restrictions on the types of business activities in which they and their non-thrift subsidiaries may engage, if all (or all but one) of their thrift subsidiaries were acquired in certain types of supervisory transactions and if all their respective savings association subsidiaries are qualified thrift lenders. To retain the focus of the multiple holding company exemption on the statutory purpose, the proposal would establish certain standards by which the OTS would determine whether a multiple holding company would be entitled to exempt treatment. This proposal is intended to channel the benefits of the multiple holding company activities exemption to companies that actually participate in the resolution of failing or failed thrifts and clarify OTS regulatory policy in an area that has been unsettled.

DATES: Comments must be received on or before April 9, 1999.

ADDRESSES: Send comments to Manager, Dissemination Branch, Information Management and Services Division, Office of Thrift Supervision, 1700 G Street, NW., Washington, D.C. 20552, Attention Docket No. 99–4. Hand deliver comments to 1700 G Street, N.W., lower level, from 9:00 A.M. to 5:00 P.M. on business days. Send facsimile transmissions to FAX Number (202) 906–7755, or (202) 906–6956 (if the comment is over 25 pages). Send e-mails to public.info@ots.treas.gov and include your name and telephone number. Interested persons may inspect comments at 1700 G Street, NW., from 9:00 A.M. until 4:00 P.M. on business days.

FOR FURTHER INFORMATION CONTACT: Donna Deale, Manager, Supervision Policy, Office of Thrift Supervision (202/906–7488); Richard L. Little, Senior Counsel (Banking and Finance) (202/906–6447); or Kevin A. Corcoran, Assistant Chief Counsel for Business Transactions (202/906–6962), Business Transactions Division, Office of the Chief Counsel, Office of Thrift Supervision, 1700 G Street, NW., Washington, D.C. 20552.

SUPPLEMENTARY INFORMATION:

I. Background

Over the past year, OTS has received inquiries from several different savings and loan holding companies about their eligibility for exempt multiple status under section 10(c)(3) of the Home Owners' Loan Act (''HOLA'').[1] Because these inquiries have involved complex factual issues, including the details of transactions that occurred several years ago, and because OTS precedent exists only in the form of legal opinions, OTS is undertaking this proposed rulemaking in order to provide clearer guidance to the industry in a manner faithful to Congressional intent.

Section 10(c) of the HOLA[2] limits the types of business activities that savings and loan holding companies and their non-thrift subsidiaries may conduct generally to activities and services historically related to the thrift business and to activities approved by the Federal Reserve Board for bank holding companies under section 4(c) of the Bank Holding Company Act.[3] Exempt from these restrictions are all unitary savings and loan holding companies, *i.e.*, holding companies that control only one savings association (''unitary holding companies''), provided that the subsidiary savings association meets the qualified thrift lender test.[4] The HOLA also provides that the activities restrictions do not apply to any multiple savings and loan holding company (''multiple holding company''), *i.e.*, a holding company that controls more than one savings association, if

(i) All, or all but 1, of the savings association subsidiaries of such company were initially acquired by the company or by an individual who would be deemed to control such company if such individual were a company—

(I) Pursuant to an acquisition under section 13(c) or (k) of the Federal Deposit Insurance Act [12 U.S.C. 1823(c) or (k)], or section 408 (m) of the National Housing Act [12 U.S.C. 1730a (m)]; or

(II) Pursuant to an acquisition in which assistance was continued to a savings association under section 13(i) of the Federal Deposit Insurance Act [12 U.S.C. 1823(i)]; and

(III) All of the savings association subsidiaries of such company are qualified thrift lenders * * *.[5]

This so-called ''exempt multiple'' treatment in section 10(c) of the HOLA has been implemented by the OTS at 12 CFR 584.2a(a)(1)(ii). So long as all of its savings association subsidiaries are qualified thrift lenders, an exempt multiple holding company may engage in the same activities as any unitary holding company under the HOLA.

The exempt multiple structure proved to be a valuable incentive for attracting acquirors to resolve a number of ailing or failed institutions during the thrift crisis of the late 1980s and early 1990s. Many unitary holding companies were reluctant to acquire failed associations if their only options were to combine a failed association with a healthy subsidiary or to hold the failed association separately and be forced to limit their activities. The exempt multiple structure enabled these holding companies to segregate their failed institutions while they resolved the problems associated with these failed institutions and to continue conducting the same range of activities as unitary holding companies.

Despite its obvious supervisory benefits, the exempt multiple structure has been difficult for the OTS to

[1] 12 U.S.C. 1467a(c)(3).

[2] 12 U.S.C. 1467a(c).

[3] 12 U.S.C. 1843(c).

[4] 12 U.S.C. 1467a(c)(3)(A).

[5] 12 U.S.C. 1467a (c) (3). Section 408(m) of the National Housing Act was repealed by the Financial Institutions Reform, Recovery, and Enforcement Act of 1989, Title IV, § 407, Pub. L. No. 101–73, 103 Stat. 363 (1989).

administer. In large part, this problem has arisen because the statute does not state how mergers and acquisitions after a supervisory acquisition should affect exempt multiple holding company status. For instance, section 10(c) of the HOLA does not mandate or prohibit exempt multiple treatment in any of the following situations:

- An exempt multiple holding company merges a subsidiary supervisory association, *i.e.*, a subsidiary acquired in a supervisory transaction, with its non-supervisory savings association subsidiary.
- An exempt multiple holding company merges or consolidates with other companies, including other savings and loan holding companies.
- An exempt multiple holding company acquires additional savings association subsidiaries by merger with the company's existing supervisory association subsidiary.
- A unitary holding company, the savings association subsidiary of which is composed almost entirely of assets and liabilities acquired in supervisory transactions, seeks to establish a *de novo* thrift subsidiary and become an exempt multiple holding company.

OTS believes that the exempt multiple provision in section 10(c) of the HOLA serves a limited but important purpose: to facilitate unitary holding company acquisitions of troubled thrifts that could not otherwise be accomplished without loss of the holding company's unitary status. Accordingly, the OTS is proposing to amend 12 CFR 584.2a(a)(1)(ii) to delineate more precisely the circumstances under which exempt multiple status will be recognized. In general, exempt multiple status will be available only where a qualifying supervisory acquisition otherwise would threaten existing unitary status. However, because the language of section 10(c)(3) does not restrict the relative timing of supervisory and non-supervisory acquisitions, a unitary holding company that acquired its sole subsidiary savings association in a supervisory transaction and then acquires an additional association in a non-supervisory transaction will be entitled to exempt multiple status. When exempt multiple status is relinquished (for example, where a holding company acquires a savings association in a supervisory transaction, but does not continue to hold it separately,[6] or where a holding company qualifies as an exempt multiple, but acquires another non-supervisory association and holds it separately), the OTS believes that exempt multiple treatment should not be reactivated by later reorganizing the subsidiary associations.

Under the proposal, a holding company will be entitled to exempt multiple status, if (1) the holding company controls directly or indirectly multiple savings associations after a supervisory acquisition, and the subsidiary association that the holding company acquired in the supervisory acquisition continues to exist as an identifiable savings association subsidiary of the holding company; or (2) the holding company controls a savings association continuously after acquiring it in a supervisory acquisition and later acquires an additional association (including by establishing a *de novo* association) as a separate subsidiary in a non-supervisory acquisition.

In cases where an exempt multiple holding company controls a subsidiary supervisory association and later causes the association to engage in a merger, consolidation, or acquisition, the OTS will determine whether the supervisory association has existed continuously since the supervisory acquisition. If the later combination causes the supervisory association to lose its essential character, the OTS no longer will consider the holding company to be an exempt multiple. In making this determination, the OTS, as appropriate, will take into account the corporate identity of the surviving savings association as specified in its charter; the relative sizes of the savings associations or other depository institutions involved in terms of assets or liabilities, or both; and such other factors on a case-by-case basis as the Director considers appropriate. The OTS is interested in comments on whether the agency should apply different or additional criteria.

The merger criteria would apply only to mergers, consolidations, or acquisitions by existing exempt multiple holding companies and not to such transactions by unitary holding companies (except where a unitary holding company seeks to preserve the supervisory status of its subsidiary association). The reason is that a unitary holding company (other than one whose sole thrift subsidiary was acquired in a supervisory transaction) cannot achieve exempt multiple status through later mergers, consolidations, or non-supervisory acquisitions.

The proposed rule would have these practical consequences:

- An exempt multiple that merged its savings association subsidiaries to become a unitary would thereafter become eligible for exempt multiple status only if it later made a qualifying supervisory acquisition, unless all the savings association subsidiaries merged were acquired in supervisory transactions.
- The qualifying supervisory status of a savings association would not transfer from the initial acquiring holding company to a succeeding acquiror, with two exceptions. In general, once a savings association in supervisory status has been restored to health, a new holding company may not acquire it from the original acquiror and still claim supervisory status for the savings association.
- The first exception to the general rule against transferability of supervisory status is that a succeeding acquisition may itself qualify as a supervisory acquisition under section 10(c).
- The second exception is that if an existing exempt multiple holding company reorganizes internally and inserts a newly formed holding company into its structure, then the newly formed company may claim exempt multiple status.

The proposed rule would apply to all existing multiple holding companies, as well as all companies that may seek exempt multiple status on the basis of supervisory acquisitions that occurred before the effectiveness of the final rule. The OTS believes that efforts to grandfather particular classes of holding companies would be cumbersome and likely to lead to inconsistent results. However, it is important that holding companies have certainty as to whether they may exercise unitary powers. Therefore, OTS proposes to open a sixty-day ''window'' following the effective date of the final rule, during which holding companies that believe they may be entitled to exempt status based on past acquisitions and on earlier rulings or opinions by OTS may seek confirmation of that status from OTS. After the 60-day window closes, OTS will review all later requests for exempt multiple treatment against the criteria set forth in the regulation, even where the supervisory acquisitions that support the exempt multiple request occurred before the effective date of the regulation.

A multiple holding company that does not receive confirmation of exempt status and that does not qualify for exempt status under the regulation will have two years after the effective date of the final rule to cease or divest any activities that are not permissible for

[6] If an exempt multiple holding company with two supervisory savings association subsidiaries were to merge the two subsidiaries, OTS would not treat the holding company as having relinquished its exempt status.

multiple holding companies under section 10(c).

II. Solicitation of Comments

The OTS is asking for comment on the proposal. Specifically, the OTS seeks comment on:

- Whether the proposed amendment will accomplish its stated purposes?
- Whether a different approach would better accomplish the stated purposes?
- Whether, in applying the merger criteria to mergers, consolidations, or acquisitions by existing exempt multiple holding companies, OTS should take into account specific factors in addition to the corporate identity of the surviving savings association and the relative sizes of the savings associations or other depository institutions involved?

III. Executive Order 12866

The Director of the OTS has determined that this proposed rule does not constitute a ''significant regulatory action'' for the purposes of Executive Order 12866.

IV. Regulatory Flexibility Act Analysis

Pursuant to Section 605(b) of the Regulatory Flexibility Act, the OTS certifies that this proposal will not have a significant economic impact on a substantial number of small entities. The proposal clarifies the rules governing exempt multiple status and is designed to reduce the burden on multiple holding companies to determine whether they are entitled to exempt status. Moreover, the proposed rule would provide a procedure permitting multiple holding companies that may be relying on past rulings or opinions of the OTS to claim exempt status, to confirm that status after the effective date of the final rule.

V. Unfunded Mandates Act of 1995

Section 202 of the Unfunded Mandates Reform Act of 1995, Pub. L. 104–4 (Unfunded Mandates Act), requires that an agency prepare a budgetary impact statement before promulgating a rule that includes a federal mandate that may result in expenditures by state, local, and tribal governments, in the aggregate, or by the private sector, or $100 million or more in any one year. If a budgetary impact statement is required, Section 205 of the Unfunded Mandates Act also requires an agency to identify and consider a reasonable number of regulatory alternatives before promulgating a rule. The OTS has determined that the proposed rule will not result in expenditures by state, local, or tribal governments or by the private sector of $100 million or more. The proposed rule is directed solely to thrift holding companies. It clarifies the rules governing exempt multiple status and is designed to reduce the burden on holding companies to determine whether they are entitled to exempt status. Accordingly, this rulemaking is not subject to Section 202 of the Unfunded Mandates Act.

VI. Paperwork Reduction Act

OTS invites comment on:

(1) Whether the proposed information collection contained in this proposal is necessary for the proper performance of OTS's functions, including whether the information has practical utility;

(2) The accuracy of OTS's estimate of the burden of the proposed information collection;

(3) Ways to enhance the quality, utility, and clarity of the information to be collected;

(4) Ways to minimize the burden of the information collection on respondents, including through the use of automated collection techniques or other forms of information technology; and

(5) Estimates of capital and start-up costs of operation, maintenance and purchases of services to provide information.

Respondents are not required to respond to this collection of information unless it displays a currently valid OMB control number.

The collection of information requirements contained in this proposal have been submitted to the Office of Management and Budget for review in accordance with the Paperwork Reduction Act of 1995 (44 U.S.C. 3507(d)). Comments on the collections of information should be sent to the Office of Management and Budget, Paperwork Reduction Project (1550), Washington, D.C. 20503, with copies to the Regulations and Legislation Division, Chief Counsel's Office, Office of Thrift Supervision, 1700 G Street, NW., Washington, D.C. 20552.

The collection of information requirements in this proposed rule are found in 12 CFR 584.2a(a)(3). OTS requires this information in order to determine whether certain holding companies are or may be eligible for exempt multiple holding company status. The likely respondents are savings and loan holding companies.

Estimated average annual burden hours per respondent: 20.

Estimated number of respondents: 30.

Estimated total annual reporting burden: 600.

Start up costs to respondents: none.

List of Subjects in 12 CFR Part 584

Administrative practice and procedure, Exempt savings and loan holding companies, Holding companies, Reporting and recordkeeping requirements, Savings associations, Securities.

Accordingly, the Office of Thrift Supervision proposes to amend chapter V, title 12, Code of Federal Regulations, as set forth below.

PART 584—REGULATED ACTIVITIES

1. The authority citation for part 584 continues to read as follows:

Authority: 12 U.S.C. 1462, 1462a, 1463, 1464, 1467a, 1468.

2. Section 584.2a is amended by revising paragraph (a)(1) introductory text and paragraph (a)(1)(ii), redesignating paragraph (a)(2) as paragraph (a)(3), and adding new paragraph (a)(2) to read as follows:

§ 584.2a Exempt savings and loan holding companies and grandfathered activities.

(a) *Exempt savings and loan holding companies.* (1) The following savings and loan holding companies are exempt from the limitations of § 584.2(b):

* * * * *

(ii) Any savings and loan holding company (or subsidiary thereof) that controls more than one savings association if all, or all but one of the savings association subsidiaries of such holding company were initially acquired pursuant to an acquisition under section 13(c) or 13(k) of the Federal Deposit Insurance Act or section 408(m) of the National Housing Act, as in effect immediately prior to the date of enactment of the Financial Institutions Reform, Recovery, and Enforcement Act of 1989 (''supervisory acquisition''), and all of the savings association subsidiaries of such holding company are qualified thrift lenders as defined in § 583.17 of this chapter, provided that the Director determines that—

(A) Except in the case of a multiple holding company that has been formed in connection with an internal reorganization, such holding company has continuously controlled a savings association acquired pursuant to a supervisory acquisition at all times since such supervisory acquisition; and

(B) The savings association acquired through a supervisory acquisition on which the exemption contained in this subparagraph is based has continuously existed as an identifiable savings association subsidiary of such holding company at all times since such supervisory acquisition, provided that if

an exempt multiple savings and loan holding company merges its savings association subsidiaries to become a unitary savings and loan holding company, the resulting savings association subsidiary will be considered to have been acquired in a non-supervisory transaction, unless all the savings associations merged were acquired by the holding company in supervisory transactions.

(2)(i) For purposes of paragraph (a)(1)(ii)(B) of this section and subject to the restrictions therein, if any savings association subsidiary that was acquired in a supervisory acquisition engages in any acquisition, merger, or consolidation after the subsidiary's own supervisory acquisition, the Director, in determining whether that savings association has existed continuously since such supervisory acquisition, will consider the following factors, as appropriate:

(A) The corporate identity of the surviving savings association as specified in its charter;

(B) The relative sizes of the holding companies, savings associations or other depository institutions involved in terms of assets or liabilities, or both; and

(C) Such other factors on a case-by-case basis as the Director considers appropriate.

(ii) The supervisory status of a savings association may not be transferred from the initial acquiring holding company to a succeeding acquiror, unless the succeeding acquisition itself qualifies as a supervisory acquisition under section 10(e) of the Home Owners' Loan Act, or unless an internal reorganization of the initial acquiror causes an acquisition by a newly formed holding company.

(iii) A holding company that believes it is or may become entitled to exempt multiple status based on rulings or opinions that the OTS issued prior to [insert effective date of regulation] may request confirmation of that status from the OTS prior to [insert date 60 days after effective date of regulation]. Such requests must contain a detailed explanation of the basis for exempt multiple status. After [insert date 60 days after effective date of regulation], the OTS will apply only the provisions in paragraphs (a)(1)(ii) and (a)(2) of this section to requests for exempt multiple status. A multiple holding company that does not receive confirmation of exempt multiple status from the OTS and that does not qualify for exempt status under the regulation, will have two years after the effective date of the final rule to cease or divest any activities that are not permissible for multiple holding companies under section 10(c).

* * * * *

Dated: February 1, 1999.

By the Office of Thrift Supervision.

Ellen Seidman,

Director.

[FR Doc. 99–2834 Filed 2–5–99; 8:45 am]

BILLING CODE 6720–01–P

DEPARTMENT OF TRANSPORTATION

Federal Aviation Administration

14 CFR Part 39

[Docket No. 98–CE–80–AD]

RIN 2120–AA64

Airworthiness Directives; Avions Pierre Robin Model R2160 Airplanes

AGENCY: Federal Aviation Administration, DOT.

ACTION: Notice of proposed rulemaking (NPRM).

SUMMARY: This document proposes to adopt a new airworthiness directive (AD) that would apply to all Avions Pierre Robin Model R2160 airplanes. The proposed AD would require repetitively inspecting the aileron/flap common support bracket for cracks, loose rivets, or separation of the bracket from the skin, and reinforcing the bracket either immediately or at a certain time period depending on whether discrepancies are found during the inspections. Reinforcing the aileron/flap common support bracket terminates the repetitive inspection requirement. The proposed AD is the result of mandatory continuing airworthiness information (MCAI) issued by the airworthiness authority for France. The actions specified by the proposed AD are intended to detect defects in the aileron/flap common support bracket (cracks, loose rivets, or separation of the bracket from the skin), which could result in reduced or loss of control of the airplane.

DATES: Comments must be received on or before March 11, 1999.

ADDRESSES: Submit comments in triplicate to the Federal Aviation Administration (FAA), Central Region, Office of the Regional Counsel, Attention: Rules Docket No. 98–CE–80–AD, Room 1558, 601 E. 12th Street, Kansas City, Missouri 64106. Comments may be inspected at this location between 8 a.m. and 4 p.m., Monday through Friday, holidays excepted.

Service information that applies to the proposed AD may be obtained from Avions Pierre Robin, 1, route de Troyes, 21121 Darois-France; telephone: 33–3 80 44 20 50; facsimile: 33–3 80 35 60 80. This information also may be examined at the Rules Docket at the address above.

FOR FURTHER INFORMATION CONTACT: Mr. Karl M. Schletzbaum, Aerospace Engineer, FAA, Small Airplane Directorate, 1201 Walnut, suite 900, Kansas City, Missouri 64106; telephone: (816) 426–6932; facsimile: (816) 426–2169.

SUPPLEMENTARY INFORMATION:

Comments Invited

Interested persons are invited to participate in the making of the proposed rule by submitting such written data, views, or arguments as they may desire. Communications should identify the Rules Docket number and be submitted in triplicate to the address specified above. All communications received on or before the closing date for comments, specified above, will be considered before taking action on the proposed rule. The proposals contained in this notice may be changed in light of the comments received.

Comments are specifically invited on the overall regulatory, economic, environmental, and energy aspects of the proposed rule. All comments submitted will be available, both before and after the closing date for comments, in the Rules Docket for examination by interested persons. A report that summarizes each FAA-public contact concerned with the substance of this proposal will be filed in the Rules Docket.

Commenters wishing the FAA to acknowledge receipt of their comments submitted in response to this notice must submit a self-addressed, stamped postcard on which the following statement is made: ''Comments to Docket No. 98–CE–80–AD.'' The postcard will be date stamped and returned to the commenter.

Availability of NPRMs

Any person may obtain a copy of this NPRM by submitting a request to the FAA, Central Region, Office of the Regional Counsel, Attention: Rules Docket No. 98–CE–80–AD, Room 1558, 601 E. 12th Street, Kansas City, Missouri 64106.

Discussion

The Direction Générale de l'Aviation Civile (DGAC), which is the airworthiness authority for France, notified the FAA that an unsafe condition may exist on all Avions Pierre Robin Model R2160 airplanes. The DGAC reports cracks found in the area of the attachment points of the aileron/flap common support brackets and corresponding wing skin areas.

This condition, if not corrected, could result in these brackets separating from the wing skin with possible reduced or loss of control of the airplane.

Relevant Service Information

Avions Pierre Robin has issued Service Bulletin No. 90, dated May 3, 1982, which specifies procedures for inspecting the aileron/flap common support bracket. In addition, Avions Pierre Robin has developed repair kits that include all the parts and procedures for reinforcing the aileron/flap common support bracket.

The DGAC classified this service bulletin as mandatory and issued French AD 82–70–(A), dated May 19, 1982, in order to assure the continued airworthiness of these airplanes in France.

The FAA's Determination

This airplane model is manufactured in France and is type certificated for operation in the United States under the provisions of section 21.29 of the Federal Aviation Regulations (14 CFR 21.29) and the applicable bilateral airworthiness agreement. Pursuant to this bilateral airworthiness agreement, the DGAC has kept the FAA informed of the situation described above.

The FAA has examined the findings of the DGAC; reviewed all available information, including the service information referenced above; and determined that AD action is necessary for products of this type design that are certificated for operation in the United States.

Explanation of the Provisions of the Proposed AD

Since an unsafe condition has been identified that is likely to exist or develop in other Avions Pierre Robin Model R2160 airplanes of the same type design registered in the United States, the FAA is proposing AD action. The proposed AD would require repetitively inspecting the aileron/flap common support bracket for cracks, loose rivets, or separation of the bracket from the skin, and reinforcing the bracket either immediately or at a certain time period depending on whether discrepancies are found during the inspections.

Accomplishment of the proposed inspections would be required in accordance with Avions Pierre Robin Service Bulletin No. 90, dated May 3, 1982. The reinforcement specified in this proposed AD would be accomplished in accordance with Avions Pierre Robin Repair Kit No. 97.40.16, as specified in Avions Pierre Robin Service Bulletin No. 90, dated May 3, 1982.

Cost Impact

The FAA estimates that 10 airplanes in the U.S. registry would be affected by the proposed AD, that it would take approximately 4 workhours per airplane to accomplish the proposed action, and that the average labor rate is approximately $60 per work hour. Parts cost approximately $100 per airplane. Based on these figures, the total cost impact of the proposed AD on U.S. operators is estimated to be $3,400, or $340 per airplane.

Regulatory Impact

The regulations proposed herein would not have substantial direct effects on the States, on the relationship between the national government and the States, or on the distribution of power and responsibilities among the various levels of government. Therefore, in accordance with Executive Order 12612, it is determined that this proposal would not have sufficient federalism implications to warrant the preparation of a Federalism Assessment.

For the reasons discussed above, I certify that this action (1) is not a ''significant regulatory action'' under Executive Order 12866; (2) is not a ''significant rule'' under DOT Regulatory Policies and Procedures (44 FR 11034, February 26, 1979); and (3) if promulgated, will not have a significant economic impact, positive or negative, on a substantial number of small entities under the criteria of the Regulatory Flexibility Act. A copy of the draft regulatory evaluation prepared for this action has been placed in the Rules Docket. A copy of it may be obtained by contacting the Rules Docket at the location provided under the caption **ADDRESSES**.

List of Subjects in 14 CFR Part 39

Air transportation, Aircraft, Aviation safety, Safety.

The Proposed Amendment

Accordingly, pursuant to the authority delegated to me by the Administrator, the Federal Aviation Administration proposes to amend part 39 of the Federal Aviation Regulations (14 CFR part 39) as follows:

PART 39—AIRWORTHINESS DIRECTIVES

1. The authority citation for part 39 continues to read as follows:

Authority: 49 U.S.C. 106(g), 40113, 44701.

§ 39.13 [Amended]

2. Section 39.13 is amended by adding a new airworthiness directive (AD) to read as follows:

Avions Pierre Robin: Docket No. 98–CE–80–AD.

Applicability: Model R2160 airplanes, all serial numbers, certificated in any category.

Note 1: This AD applies to each airplane identified in the preceding applicability provision, regardless of whether it has been modified, altered, or repaired in the area subject to the requirements of this AD. For airplanes that have been modified, altered, or repaired so that the performance of the requirements of this AD is affected, the owner/operator must request approval for an alternative method of compliance in accordance with paragraph (f) of this AD. The request should include an assessment of the effect of the modification, alteration, or repair on the unsafe condition addressed by this AD; and, if the unsafe condition has not been eliminated, the request should include specific proposed actions to address it.

Compliance: Required as indicated in the body of this AD, unless already accomplished.

To detect defects in the aileron/flap common support bracket (cracks, loose rivets, or separation of the bracket from the skin), which could result in reduced or loss of control of the airplane, accomplish the following:

(a) Within the next 50 hours time-in-service (TIS) after the effective date of this AD, and thereafter at intervals not to exceed 50 hours TIS until the reinforcement required by paragraph (b) of this AD is accomplished, inspect the aileron/flap common support brackets for cracks, loose rivets, or separation of the bracket from the skin. Accomplish this inspection in accordance with Avions Pierre Robin Service Bulletin No. 90, dated May 3, 1982.

(b) At whichever of the compliance times in paragraphs (b)(1) and (b)(2) of this AD that occurs first, reinforce the left-hand and right-hand aileron/flap common support bracket in accordance with the instructions in Avions Pierre Robin Repair Kit No. 97.40.16 , as specified in Avions Pierre Robin Service Bulletin No. 90, dated May 3, 1982.

(1) Prior to further flight if any crack(s), loose rivet(s), and/or separation of the bracket from the skin are/is found during any inspection required by paragraph (a) of this AD; or

(2) Within the next 12 calendar months after the effective date of this AD.

(c) Reinforcing the aileron/flap common support bracket as specified in paragraph (b) of this AD is considered terminating action for the repetitive inspection requirement of this AD.

(d) As of the effective date of this AD, no person may install, on any affected airplane, an aileron/flap common support bracket that has not been reinforced as specified in paragraph (b) of this AD.

(e) Special flight permits may be issued in accordance with sections 21.197 and 21.199 of the Federal Aviation Regulations (14 CFR 21.197 and 21.199) to operate the airplane to

a location where the requirements of this AD can be accomplished.

(f) An alternative method of compliance or adjustment of the compliance times that provides an equivalent level of safety may be used if approved by the Manager, Small Airplane Directorate, FAA, 1201 Walnut, suite 900, Kansas City, Missouri 64106. The request shall be forwarded through an appropriate FAA Maintenance Inspector, who may add comments and then send it to the Manager, Small Airplane Directorate.

Note 2: Information concerning the existence of approved alternative methods of compliance with this AD, if any, may be obtained from the Small Airplane Directorate.

(g) Questions or technical information related to the service information referenced in this AD should be directed to Avions Pierre Robin, 1, route de Troyes, 21121 Darois-France; telephone: 33–3 80 44 20 50; facsimile: 33–3 80 35 60 80. This service information may be examined at the FAA, Central Region, Office of the Regional Counsel, Room 1558, 601 E. 12th Street, Kansas City, Missouri 64106.

Note 3: The subject of this AD is addressed in issued French AD 82–70–(A), dated May 19, 1982.

Issued in Kansas City, Missouri, on February 2, 1999.

Michael Gallagher,

Manager, Small Airplane Directorate, Aircraft Certification Service.

[FR Doc. 99–2902 Filed 2–5–99; 8:45 am]

BILLING CODE 4910–13–P

DEPARTMENT OF HEALTH AND HUMAN SERVICES

Food and Drug Administration

21 CFR Part 876

[Docket No. 98N–1134]

Gastroenterology and Urology Devices; Reclassification of the Extracorporeal Shock Wave Lithotripter

AGENCY: Food and Drug Administration, HHS.

ACTION: Proposed rule.

SUMMARY: The Food and Drug Administration (FDA) is issuing for public comment its proposal to reclassify from class III to class II the extracorporeal shock wave lithotripter, when intended for use to fragment kidney and ureteral calculi, and the recommendation of the Gastroenterology and Urology Devices Advisory Panel (the Panel) regarding this reclassification. The Panel made this recommendation after reviewing the relevant publicly available information and the proposed reclassification. FDA is also issuing for public comment its tentative findings on the Panel's recommendation. After considering any public comments on the Panel's recommendation and FDA's tentative findings, FDA will reclassify the device or retain it in class III. FDA's decision on the proposed reclassification will be announced in the **Federal Register**.

DATES: Written comments by May 10, 1999.

ADDRESSES: Submit written comments to the Dockets Management Branch (HFA–305), Food and Drug Administration, 5630 Fishers Lane, rm. 1061, Rockville, MD 20852.

FOR FURTHER INFORMATION CONTACT: John H. Baxley, Center for Devices and Radiological Health (HFZ–470), Food and Drug Administration, 9200 Corporate Blvd., Rockville, MD 20850, 301–594–2194.

SUPPLEMENTARY INFORMATION:

I. Background

The Federal Food, Drug, and Cosmetic Act (the act) (21 U.S.C. 301 *et. seq.*), as amended by the Medical Device Amendments of 1976 (the 1976 amendments) (Pub. L. 94–295), the Safe Medical Devices Act of 1990 (the SMDA) (Pub. L. 101–629), and the Food and Drug Administration Modernization Act of 1997 (the FDAMA) (Pub. L. 105–115), established a comprehensive system for the regulation of medical devices intended for human use. Section 513 of the act (21 U.S.C. 360c) established three categories (classes) of devices, depending on the regulatory controls needed to provide reasonable assurance of their safety and effectiveness. The three categories of devices are class I (general controls), class II (special controls), and class III (premarket approval).

Under section 513 of the act, devices that were in commercial distribution before May 28, 1976 (the date of enactment of the 1976 amendments), generally referred to as preamendments devices, are classified after FDA has: (1) Received a recommendation from a device classification panel (an FDA advisory committee); (2) published the panel's recommendation for comment, along with a proposed regulation classifying the device; and (3) published a final regulation classifying the device. FDA has classified most preamendments devices under these procedures.

Devices that were not in commercial distribution prior to May 28, 1976, generally referred to as postamendments devices, are classified automatically by statute (section 513(f) of the act (21 U.S.C. 360c(f))) into class III without any FDA rulemaking process. Those devices remain in class III and require premarket approval, unless and until the device is reclassified into class I or II or FDA issues an order finding the device to be substantially equivalent, under section 513(i) of the act (21 U.S.C. 360c(i)), to a predicate device that does not require premarket approval. The agency determines whether new devices are substantially equivalent to previously offered devices by means of premarket notification procedures in section 510(k) of the act (21 U.S.C. 360(k)) and part 807 of the regulations (21 CFR part 807).

A preamendments device that has been classified into class III may be marketed, by means of premarket notification procedures, without submission of a premarket approval application (PMA) until FDA issues a final regulation under section 515(b) of the act (21 U.S.C.360e(b)) requiring premarket approval.

Reclassification of classified postamendments devices is governed by section 513(f)(2) of the act (21 U.S.C. 360c(f)(2)). This section provides that FDA may initiate the reclassification of a device classified into class III under section 513(f)(1) of the act, or the manufacturer or importer of a device may petition the Secretary of Health and Human Services (the Secretary) for the issuance of an order classifying the device in class I or class II. FDA's regulations in 21 CFR 860.134 set forth the procedures for the filing and review of a petition for reclassification of such class III devices. In order to change the classification of the device, it is necessary that the proposed new class have sufficient regulatory controls to provide reasonable assurance of the safety and effectiveness of the device for its intended use.

Section 216 of FDAMA replaced the ''four of a kind'' rule in the old section 520(h)(4) of the act (21 U.S.C. 360j(h)(4)) with a provision that frees agency use of data in PMA's approved 6 or more years before FDA undertakes certain regulatory actions, including device reclassifications. Under section 520(h)(4) of the act, as amended by FDAMA, the agency has supplemented other sources of information that support reclassification of the extracorporeal shock wave lithotripter with data contained in PMA's approved 6 or more years before the date of this proposal. In this instance, FDA has only used data that would have been available to the agency under the superseded four of a kind rule.

Under section 513(f)(2)(B)(i) of the act (21 U.S.C. 360c(f)(2)(B)(i)), the Secretary, for good cause shown, may refer a proposed reclassification to a

device classification panel. The Panel shall make a recommendation to the Secretary respecting approval or denial of the proposed reclassification. Any such recommendation shall contain: (1) A summary of the reasons for the recommendation, (2) a summary of the data upon which the recommendation is based, and (3) an identification of the risks to health (if any) presented by the device with respect to which the proposed reclassification was initiated.

II. Regulatory History of the Device

The extracorporeal shock wave lithotripter intended for the fragmentation of kidney and ureteral calculi is a postamendments device classified into class III under section 513(f)(1) of the act. Therefore, this generic type of device cannot be placed in commercial distribution unless it is reclassified under section 513(f)(2), or is the subject of a PMA or notice of completion of a product development protocol (PDP) under section 515 of the act (21 U.S.C. 360e).

In accordance with section 513(f)(2) of the act, FDA, on its own initiative, is proposing to reclassify this device from class III to class II when intended to fragment kidney and ureteral calculi. FDA referred the proposed reclassification to the Panel for its recommendation on the requested change in classification. This panel meeting was held on July 30, 1998, and is summarized further in Section VI.

III. Device Description

An extracorporeal shock wave lithotripter is a device that focuses ultrasonic shock waves into the body to noninvasively fragment urinary calculi within the kidney and ureter. The primary components of the device are a shock wave generator, high voltage generator, control console, imaging/localization system, and patient table. Prior to treatment, the urinary stone is targeted using either an integral or stand-alone localization/imaging system. Shock waves are typically generated using electrostatic spark discharge (spark gap), electromagnetically repelled membranes, or piezoelectric crystal arrays, and focused onto the stone with either a specially designed reflector, dish, or acoustic lens. The shock waves are created under water within the shock wave generator, and are transferred to the patient's body through a water-filled rubber cushion or by direct contact of the patient's skin with the water. After the stone has been fragmented by the focused shock waves, the fragments pass out of the body with the patient's urine.

IV. Recommendations of the Panel

At a public meeting on July 30, 1998, the Panel unanimously recommended that the extracorporeal shock wave lithotripter indicated for the fragmentation of kidney and ureteral calculi be reclassified from class III to class II. The Panel believed that the special controls of consensus standards, clinical performance testing, labeling restrictions, and physician training restrictions would provide reasonable assurance of the safety and effectiveness of the device.

V. Risks to Health

After considering the information discussed by the Panel during the reclassification proceedings, the published literature, data in PMA applications available to FDA under section 520(h)(4) of the act, as amended by FDAMA, and the Medical Device Reports, FDA believes the following risks are associated with the use of the extracorporeal shock wave lithotripter in the fragmentation of kidney and ureteral calculi.

A. Bleeding

Interaction between the shock waves and internal tissues can result in bleeding within the urinary tract. Lithotripsy-induced bleeding typically presents as either hematuria (blood in the urine) or renal hematoma. Hematuria occurs following most treatments (Refs. 4, 69, and 85), is believed to be secondary to trauma to the renal parenchyma (Ref. 7), and usually resolves spontaneously within 24 to 48 hours of treatment (Refs. 8 and 69). Small, asymptomatic renal hematomas occur with 20 to 25 percent of treatments, which resolve without intervention (Ref. 52). In less than 1 percent of treatments, however, clinically significant intrarenal, subcapsular, or perirenal hematomas occur (Refs. 20 and 50). These patients typically present with severe, chronic flank pain (Refs. 4, 50, 52, and 84), and anuria secondary to renal compression has also been reported (Refs. 62 and 95). Although clinically significant hematomas often resolve with conservative management (Refs. 50, 52, and 84), severe hemorrhage (Refs. 4, 85, and 92) or death (Refs. 66 and 92) has been reported. Management of severe renal hemorrhage includes the administration of blood transfusions (Refs. 50, 52, 81, 85, and 92), percutaneous drainage (Ref. 72), or surgical intervention, which may include nephrectomy (Refs. 4, 50, and 62).

Lithotripsy-induced bleeding is believed to be caused by vessel damage secondary to the collapse of cavitation bubbles at the shock wave focus (Refs. 17 and 65). The risk of serious bleeding is minimized by the use of conservative treatment parameters (Ref. 17) and careful evaluation of the patient post-treatment (Ref. 50).

Patient characteristics associated with increased risk for the development of life threatening hemorrhage include the presence of coagulopathy or the use of anticoagulant therapy (including aspirin) (Refs. 45, 73, 85, and 91), presence of an arterial calcification or vascular aneurysm (Refs. 9, 19, and 91), and poorly-controlled hypertension (Refs. 49 and 50). For some of these high risk patients, however, lithotripsy can still be delivered safely as long as certain precautions are taken. Specifically, patients on anticoagulant therapy can undergo lithotripsy provided that their anticoagulation is temporarily reversed (Refs. 73 and 91). Furthermore, patients with an arterial calcification or vascular aneurysm have been treated without complication provided that the calcification or aneurysm is sufficiently outside of the shock wave path, treatment is limited to a minimum number of low-power shock waves, and the patient is carefully monitored (Refs. 9 and 19).

B. Renal Injury

The focused shock waves delivered by all extracorporeal shock wave lithotripters cause some degree of acute trauma to the treated kidney with associated functional impairment (Refs. 1, 7, 41, and 101). As with bleeding, renal injury is probably secondary to the effects of cavitation at the shock wave focus (Refs. 16, 17, and 82).

It is believed that renal trauma, with associated nephron loss and/or tubule damage, occurs during nearly all lithotripsy treatments (Refs. 1 and 82), is dependent upon the applied shock wave dose (Refs. 74, 82, and 86), and is typically limited to the size of the shock wave focal volume (Ref. 83). While a small region of renal scarring persists at the treated site (Refs. 74 and 86), any associated changes in renal function resolve within 30 days (Refs. 3, 6, 32, and 86). Although infrequently reported and of questionable clinical significance, permanent morphological changes to the kidney have been observed following lithotripsy (Refs. 6 and 74). The risk of renal injury is minimized by delivering fewer, less powerful shock waves (Refs. 70 and 74), and using a lower shock wave repetition rate (Refs. 17 and 86).

Patients with solitary kidneys or pre-existing impairment of renal function may be at increased risk for long-term changes (Refs. 74 and 100). Additionally, although many short-term studies have been published regarding the safe use of extracorporeal shock wave lithotripsy in children (Refs. 53, 55, 69, and 70), questions still exist regarding the long-term effects of shock waves upon the function and growth of the immature kidney (Refs. 15, 27, 70, and 74).

C. Hypertension

Early investigators reported new onset of hypertension in as many as 8 percent of patients between 1 and 2 years following extracorporeal shock wave lithotripsy to the kidney (Refs. 58 and 99). The physiological basis of this finding was theorized to be caused by the Page effect, secondary to the renal fibrosis that occurs following resolution of lithotripsy-induced intraparenchymal hemorrhage (Refs. 52 and 99). Despite the hypertension incidence rates reported by these early studies, however, subsequent research indicates that hypertension is not a risk of lithotripsy. Lingeman et al. noted no difference at 2 years in the rates of new onset of hypertension between patients who received lithotripsy and those who received alternative stone removal therapies, although a small but statistically significant increase in diastolic blood pressure was seen in the lithotripsy group (Ref. 61). In a subsequent report describing 3- and 4-year followup on the same patients, similar outcomes were observed (Ref. 60). In a similar investigation, Vaughan et al. observed no difference in either new onset of hypertension or blood pressure between lithotripsy and nonlithotripsy treated patients 2 years post-treatment (Ref. 98). The results of these controlled studies demonstrate that the development of hypertension is not an actual risk of lithotripsy among normal, healthy patients. However, due to the unknown effects of lithotripsy-induced damage to the growing kidney, concern has been raised that pediatric patients may be at increased risk of developing chronic hypertension (Ref. 74).

D. Cardiac Arrhythmia

Cardiac arrhythmias, most commonly premature ventricular contractions, are generally reported during extracorporeal shock wave lithotripsy at fixed shock wave delivery in 2 to 20 percent of patients (Refs. 14 and 30). While the specific cause of lithotripsy-induced arrhythmias is not fully understood, researchers have postulated several causes, including irritation or mechanical stimulation of the myocardium by the shock wave, autonomic nerve stimulation, or the effects of the intravenous sedatives (Refs. 14 and 43). Arrhythmias resolve spontaneously upon synchronizing the shock waves with the refractory period of the ventricular cycle (i.e., electrocadiograph (ECG) gating) or terminating treatment (Refs. 14, 30, and 102). Although these cardiac disturbances rarely pose a serious risk to the healthy patient, there is the potential for life threatening events to occur in those with a pre-existing history of cardiac disease (Ref. 43). Furthermore, patients with either cardiac pacemakers or implantable defibrillators may be at additional risk due to the possibility of the lithotripter interfering with the function of the pulse generator (Refs. 2, 91, and 97).

The risk of serious cardiac events during lithotripsy can be minimized by monitoring the cardiac activity of all patients during treatment to detect any arrhythmias, and either terminating treatment or switching to an ECG-gated mode of shock wave delivery should an arrhythmia occur (Refs. 59 and 102). Additionally, the risks of lithotripter interference with cardiac pacemakers and implantable defibrillators can be minimized by temporarily reprogramming the pulse generator prior to treatment, verifying the correct function of the pulse generator during and after shock wave delivery, and maintaining sufficient distance between the shock wave path and the pulse generator (Refs. 2, 5, 91, and 97).

E. Urinary Obstruction

Urinary obstruction occurs in up to 6 percent of patients following lithotripsy due to stone fragments becoming lodged in the ureter, and may be the result of either a single stone fragment or the accumulation of multiple small stone particles (i.e., Steinstrasse) (Refs. 24, 48, and 84). Patients with urinary obstruction typically present with persistent pain, and may be at risk of developing hydronephrosis with subsequent renal failure if the obstruction is not promptly treated (Ref. 29). Often, the obstructing fragments pass spontaneously and intervention is not necessary (Refs. 48 and 84). Intervention is indicated in the presence of severe pain, fever, sepsis, or failure of the obstruction to spontaneously resolve, and usually includes ureteroscopic manipulation or retrieval, electrohydraulic or laser lithotripsy, percutaneous nephrostomy drainage, open surgery, or repeat extracorporeal shock wave lithotripsy (Refs. 22, 48, 84, and 93).

F. Infection

Urinary tract infection (UTI) occurs in 1 to 7 percent of patients following extracorporeal shock wave lithotripsy as a result of the release of bacteria from the fragmentation of infected calculi (Refs. 18, 77, 80, and 84). Rarely, pyelonephritis secondary to lithotripsy has been reported (Refs. 77 and 84). Additionally, lithotripsy shock waves can cause local tissue trauma sufficient to permit bacteria to enter the bloodstream from the urinary tract, resulting in sepsis (Refs. 29 and 84). Although the incidence of sepsis following lithotripsy is not common, typically occurring in less than 1 percent of cases (Ref. 31), this complication has the potential for serious consequences (Ref. 84). Patients at greatest risk of developing severe infectious complications include those with pre-existing UTI and infected stones, as well as those who experience urinary obstruction due to the passage of stone fragments (Refs. 29, 38, and 84). Additionally, patients with cardiac disease, including valvular disease and implanted heart valves, and immunocompromised patients are at increased risk for developing bacterial endocarditis following lithotripsy (Ref. 68).

The risk of infectious complications secondary to extracorporeal shock wave lithotripsy can be effectively minimized through the use of prophylactic antibiotics in patients with pre-existing UTI, infected stones, cardiac disease, and compromised immune systems (Refs. 18, 38, 68, and 84).

G. Injury to Adjacent Organs

Because multiple shock waves pass through the patient's body during treatment, extracorporeal shock wave lithotripsy has the potential to cause injury to nontarget organs. Examples of injury to adjacent organs include splenic rupture requiring splenectomy (Refs. 63 and 78), liver hematoma (Ref. 84), and pancreatitis (Ref. 84). In addition, the interaction of shock waves with air-filled organs, such as the lung or bowel, results in hemorrhage secondary to tissue damage (Refs. 36, 65, and 84). Serious injury to adjacent organs is rare, and is minimized through proper patient selection, careful targeting of the shock wave focus, and the use of conservative treatment parameters and retreatment intervals (Refs. 36, 76, and 84).

In addition to the documented risks to adjacent organs described previously, extracorporeal shock wave lithotripsy

potentially represents significant hazards to other nontarget tissues. First, the administration of shock waves to pregnant animals at specific gestational stages has been shown to cause growth disturbances, serious injury, or death to the fetus (Refs. 33 and 71). As a result of these findings, pregnancy is regarded as an absolute contraindication of lithotripsy (Refs. 12, 74, 76, and 91). The medical community has raised the concern that lithotripsy for stones in the lower ureter in women of childbearing potential may cause irreversible damage to the ovary (Ref. 12). Although several investigators have failed to detect ovarian damage in women receiving extracorporeal shock wave lithotripsy to the lower ureter (Refs. 25 and 91), this potential risk has not been fully assessed (Ref. 12). Lastly, Yeaman et al. observed growth plate disturbances in the epiphyses of developing long bones in rats subjected to shock waves, indicating that extracorporeal shock wave lithotripsy may cause growth disturbances in children (Ref. 103). Although these same growth disturbances were not duplicated in a subsequent animal study (Ref. 96), the long-term effects of lithotripsy shock waves upon nontarget pediatric tissues remain unknown.

H. Other Complications

Other reported complications of extracorporeal shock wave lithotripsy include pain/renal colic, skin irritation/bruising, nausea/vomiting, fever, vasovagal syncope, autonomic dysreflexia, embedded stone fragments, and increased stone recurrence rate.

Pain/renal colic and skin irritation/bruising commonly occur during and immediately after treatment (Refs. 22, 24, 47, and 84), are less severe with lithotripters that have less powerful shock waves and larger shock wave generator apertures (Refs. 22, 47, and 79), and typically resolve spontaneously (Ref. 22). Temporary pain/renal colic may also occur secondary to the passage of stone fragments, which is often managed with medication. Chronic pain may be indicative of ureteral obstruction or renal hematoma (Refs. 4, 84, and 92).

Transient nausea and vomiting are occasionally reported immediately after lithotripsy (Refs. 22, 24, and 37), and may be associated with either pain or the administration of sedatives or analgesia.

Fever has been reported after lithotripsy (Refs. 24, 31, 47, and 77), and may be secondary to infection (Ref. 23).

Vasovagal syncope (heart rate suppression concurrent with hypotension) has been reported during lithotripsy, although its incidence is rare (Ref. 44). Researchers attribute this serious condition to either patient anxiety or shock wave stimulation of renal peripheral autonomic nerve fibers, and conclude that the risks of this condition can be minimized by closely monitoring cardiac activity during treatment.

Kabalin et al. demonstrated that while autonomic dysreflexia may occur in spinal cord injured patients during lithotripsy, this condition is effectively treated by terminating shock wave delivery and administering medical therapy (Ref. 42).

Although infrequently noted, stone fragments have the potential to become embedded in the ureteral wall during lithotripsy (Ref. 28). Obstructing submucosal calculi may necessitate endoscopic removal.

Some investigators have observed higher stone recurrence rates following extracorporeal shock wave lithotripsy as compared to alternative stone removal therapies, indicating that retained stone particles may act as a nidus for new stone formation (Ref. 10). However, the magnitude and significance of this finding are unclear and continue to undergo investigation.

VI. Summary of Reasons for Recommendation

After reviewing the data provided by FDA, and after consideration of the open discussions during the Panel meeting and the Panel members' personal knowledge of and clinical experience with the device, the Panel gave the following reasons in support of its recommendation to reclassify the generic type extracorporeal shock wave lithotripter for use in fragmenting kidney and ureteral calculi from class III into class II: (1) The safety and effectiveness of the extracorporeal shock wave lithotripter in the fragmentation of kidney and ureteral calculi has become well-established since approval of the first device in 1984; (2) extracorporeal shock wave lithotripsy is effective in treating most kidney and ureteral calculi, with a typical stone-free rate of 75 percent; and (3) the rates of serious complications from extracorporeal shock wave lithotripsy are low, and can be effectively minimized by: (a) Consensus standards regarding shock wave characterization measurements and general mechanical and electrical safety, (b) clinical performance testing, (c) labeling restrictions, and (d) physician training restrictions (Ref. 94). Based on information presented by FDA, along with the Panel members' personal knowledge and clinical experience, the Panel identified the following risks to health regarding the use of extracorporeal shock wave lithotripsy for the fragmentation of kidney and ureteral calculi: Bleeding and hematoma, renal injury and scarring, cardiac arrhythmia, urinary obstruction, urinary tract infection, and injury to adjacent organs. In addition, the Panel stated that the safety of lithotripsy among certain subgroups is unknown, such as pregnant women, children, and women of childbearing potential with lower ureteral stones. Although hypertension has historically been listed as a potential risk of extracorporeal shock wave lithotripsy, the Panel stated that sufficient evidence now exists to conclude that this condition should not be listed as an actual risk to health.

The Panel believes that the extracorporeal shock wave lithotripter should be reclassified into class II because special controls, in addition to general controls, provide reasonable assurance of the safety and effectiveness of the device, and there is sufficient information to establish special controls to provide such assurance.

VII. Summary of Data Upon Which the Panel Recommendation Is Based

Based on the information discussed by the Panel during the reclassification proceedings, the published literature, and data in premarket approval (PMA) applications available to FDA under section 520(h)(4) of the act, as amended by FDAMA, FDA believes that there is reasonable knowledge of the benefits of the device when used for the fragmentation of kidney and ureteral calculi. Extracorporeal shock wave lithotripsy successfully fragments most urinary calculi. Effectiveness, expressed as the percentage of patients rendered stone-free within 3 months, ranges between 55 to 98 percentage with a typical retreatment rate of 1 to 25 percentage (Refs. 11, 20, 22 to 24, 47, 51, 75, 84, 87, 89, and 93). Successful treatment outcome has been achieved despite the use of different shock wave generator designs (i.e., electrostatic spark discharge, electromagnetically repelled membranes, piezoelectric crystal arrays) and wide range of shock wave characteristics. Similarly, extracorporeal shock wave lithotripter effectiveness is comparable among the different anatomical sites of the upper urinary tract. Specifically, similar stone-free rates are reported for stones in the kidney and the upper, middle, and lower ureter, making extracorporeal shock wave lithotripsy the first-line therapy for most upper urinary calculi (Refs. 11, 13, 21, 46, 66, and 90).

Despite being capable of effectively fragmenting most urinary stones, there

are several limitations to the success of extracorporeal shock wave lithotripsy. Many studies have observed poor effectiveness with both staghorn and large (i.e., greater than 2 centimeters in largest dimension) stones, leading to the recommendation that alternative stone removal therapies should be considered for these cases (Refs. 57, 64, 75, 84, and 88). Furthermore, some stone compositions, particularly cystine calculi, are more resistant to fragmentation than others, and, therefore, may require more shocks than other stone types (Refs. 34 and 91). Because the effectiveness of lithotripsy is predicated on the resulting stone fragments passing from the urinary tract, patients with an obstruction distal to the stone cannot be successfully treated until resolution of the obstruction (Refs. 8, 29, and 57). Stones that are embedded or impacted within the tissue of the kidney or ureter are also not effectively treated with lithotripsy, due to the inability of the stone fragments to pass out of the body (Refs. 29 and 46). Lastly, lithotripsy is not effective in patients with anatomical conditions that prevent targeting of the shock wave focus at the stone, such as severe obesity (Refs. 29 and 91) or orthopedic deformity (Ref. 53).

Although extracorporeal shock wave lithotripsy is effective for the treatment of most ureteral calculi, in some specific instances it is not effective as a first-line therapy. Many authors report poor localization of ureteral stones using ultrasound imaging, making lithotripsy difficult or impossible if the lithotripter does not incorporate or use an x-ray imaging system (Refs. 35, 47, and 90). Additionally, small stones in the middle or lower ureter (i.e., 4 to 6 mm in largest dimension) have a high probability of passing spontaneously (Ref. 67), making the use of lithotripsy unnecessary unless immediate intervention is required.

Since its introduction in the United States in 1984, extracorporeal shock wave lithotripsy has become the preferred treatment for kidney and ureteral calculi (Refs. 56 and 91). Not only is lithotripsy extremely effective, but the overall rate of serious risks from extracorporeal shock wave lithotripsy, primarily clinically significant renal hematoma, severe hemorrhage, chronic renal injury, and sepsis, is low and can be effectively minimized. Treatment is noninvasive, often delivered in an outpatient setting, and can be performed without general or regional anesthesia with many systems (Refs. 37, 56, and 104). Compared to alternative therapies for the removal of urinary calculi, extracorporeal shock wave lithotripsy is either associated with less morbidity (e.g., open surgery, percutaneous nephrolithotomy, ureteroscopy) (Refs. 8, 54, 57, and 84) or increased success (e.g., watchful waiting) (Ref. 67).

Based on the available information, FDA believes that the special controls discussed in section VIII of this document are capable of providing reasonable assurance of the safety and effectiveness of the extracorporeal shock wave lithotripter with regard to the identified risks to health of this device.

VIII. Special Controls

In addition to general controls, FDA believes that the extracorporeal shock wave lithotripter should be subject to the special controls of labeling restrictions and a FDA guidance document to minimize the risks to health identified for this device.

A. Labeling Restrictions

Labeling restrictions can control the risks of bleeding, renal injury, cardiac arrhythmia, urinary obstruction, infection, injury to adjacent organs, and other reported complications by providing information on patient selection, treatment practices, post-treatment followup, and potential adverse events. Specifically, FDA is proposing that extracorporeal shock wave lithotripters be subject to the labeling statements listed in the appendix as a special control, in addition to other required labeling information.

Under 21 CFR 801.109(b)(ii) and section 520(e) of the act, FDA also proposes as described in the guidance document entitled ''Guidance for the Content of Premarket Notifications (510(k)s) for Extracorporeal Shock Wave Lithotripters Indicated for the Fragmentation of Kidney and Ureteral Calculi'' to require the following statement: ''CAUTION: Federal law restricts this device to sale by or on the order of a physician trained and/or experienced in the use of this device as outlined in an appropriate training program.''

B. FDA Guidance Document

Adherence to the FDA guidance document entitled ''Guidance for the Content of Premarket Notifications (510(k)s) for Extracorporeal Shock Wave Lithotripters Indicated for the Fragmentation of Kidney and Ureteral Calculi'' (Ref. 26) can control the risks of bleeding, renal injury, cardiac arrhythmia, urinary obstruction, infection, injury to adjacent organs, and other reported complications by recommending: (1) Conformance to consensus standards, (2) shock wave characterization measurements, (3) assessment of localization accuracy, (4) clinical performance testing, and (5) physician training restrictions for premarket notifications for extracorporeal shock wave lithotripters. These sections of the guidance document correspond to the controls recommended by the Panel.

1. Conformance to consensus standards

The FDA guidance document recommends conformance to the following consensus standards: (1) International Electrotechnical Commission (IEC) 60601–2–36 Medical electrical equipment—Part 2: Particular requirements for the safety of equipment for extracorporeally induced lithotripsy; (Ref. 39) and (2) IEC 61846 Ultrasonics—Pressure pulse lithotripters—Characteristics of fields (Ref. 40).

Conformance with IEC 60601–2–36 can control the risks of bleeding, renal injury, and injury to adjacent organs by requiring that the device accurately localize stones at the shock wave focus and be designed to guard against unintentional shock wave delivery.

Conformance with IEC 61846 can control the risks of bleeding, renal injury, and injury to adjacent organs by providing a standard method for characterizing the lithotripter's acoustic output for the purpose of determining whether its shock wave characteristics are within the range provided by existing systems.

2. Shock wave characterization measurements

Shock wave characterization measurements can control the risks of bleeding, renal injury, and injury to adjacent organs by having each manufacturer assess whether the shock wave characteristics of its lithotripter are within the range provided by existing systems.

3. Assessment of localization accuracy

Assessment of localization accuracy can control the risks of bleeding, renal injury, and injury to adjacent organs by having each manufacturer verify that its device accurately positions stones at the shock wave focus.

4. Clinical performance testing

Clinical performance testing can control the risks of bleeding, renal injury, cardiac arrhythmia, and injury to adjacent organs by verifying that the device accurately locates the target stone, delivers shock waves in accordance with the parameters set by the operator, and does not present an unreasonable risk of injury to the patient. As recommended by the Panel, this testing can take the form of either a small, confirmatory clinical study or a larger clinical investigation of safety and

effectiveness, depending upon the technological characteristics of the particular device (Ref. 94). For extracorporeal shock wave lithotripters that generate shock waves using a similar method to that of legally marketed systems and have comparable shock wave characteristics, a small, confirmatory clinical study should be performed. However, for systems that use a novel method of shock wave generation or have shock wave characteristics that are outside of the range of current devices, a larger clinical investigation is necessary to assess safety and effectiveness.

5. Physician training restrictions

Physician training restrictions can control the risks of bleeding, renal injury, cardiac arrhythmia, urinary obstruction, infection, injury to adjacent organs, and other reported complications by having each manufacturer develop a training program to instruct users of their device on both the operation of the particular lithotripsy system and the general practices for the safe and effective use of extracorporeal shock wave lithotripters (Ref. 76). Manufacturers should inform device users of this physician training restriction with the following labeling statement: ''CAUTION: Federal law restricts this device to sale by or on the order of a physician trained and/or experienced in the use of this device as outlined in a training program.''

IX. FDA's Tentative Findings

The Panel and FDA believe that the extracorporeal shock wave lithotripter should be classified into class II because special controls, in addition to general controls, would provide reasonable assurance of the safety and effectiveness of the device, and there is sufficient information to establish special controls to provide such assurance.

X. References

The following references have been placed on display in the Dockets Management Branch (address above) and may be seen by interested persons between 9 a.m. and 4 p.m., Monday through Friday:

1. Akdas, A., L. N. Türkeri, Y. Ilker, F. Simsek, and K. Emerk, Short-Term Bioeffects of Extracorporeal Shockwave Lithotripsy, *Journal of Endourology*, 8(3):187–190, 1994.

2. Albers, D. D., F. E. Lybrand, III, J. C. Axton, and J. R. Wendelken, ''Shockwave Lithotripsy and Pacemakers: Experience with 20 Cases,'' *Journal of Endourology*, 9(4):301–303, 1995.

3. Anderson, K. R., K. Kerbl, P. T. Fadden, M. R. Wick, E. M. McDougall, and R. V. Clayman, ''Effect of Piezoelectric Energy on Porcine Kidneys Using the EDAP LT.02,'' *Journal of Urology*, 153:1295–1298, 1995.

4. Antoniou, N. K., D. Karanastasis, and J. L. Stenos, ''Severe Perinephric Hemorrhage after Shock Wave Lithotripsy,'' *Journal of Endourology*, 9(3):239–241, 1995.

5. Asroff, S. W., T. E. Kingston, and B. S. Stein, ''Extracorporeal Shock Wave Lithotripsy in Patient with Cardiac Pacemaker in an Abdominal Location: Case Report and Review of the Literature,'' *Journal of Endourology*, 7(3):189–192, 1993.

6. Atahan, Ö., T. Alkibay, Ü. Karaoglan, N. Deniz, and I. Bozkirli, ''Acute Bioeffects of Electromagnetic Lithotripsy,'' *Scandinavian Journal of Urology and Nephrology*, 30:269–272, 1996.

7. Back, W., K. U. Köhrmann, J. Bensemann, J. Rassweiler, and P. Alken, ''Histomorphologic and Ultrastructural Findings of Shockwave-Induced Lesions in the Isolated Perfused Kidney of the Pig,'' *Journal of Endourology*, 8(4):257–261, 1994.

8. Bush, W. H. and G. E. Brannen, lithotripsy, Encyclopedia of Medical Devices and Instrumentation, J. G. Webster (ed.), John Wiley & Sons, New York, Vol. 3, pp. 1806–1820, 1988.

9. Carey, S. W., and S. B. Streem, ''Extracorporeal Shock Wave Lithotripsy for Patients with Calcified Ipsilateral Renal Arterial or Abdominal Aortic Aneurysms,'' *Journal of Urology*, 148:18–20, 1992.

10. Carr, L. K., R. J. D. Honey, M. A. S. Jewett, D. Ibanez, M. Ryan, and C. Bombardier, ''New Stone Formation: A Comparison of Extracorporeal Shock Wave Lithotripsy and Percutaneous Nephrolithotomy,'' *The Journal of Urology*, 155:1565–1567, 1996.

11. Cass, A. S., ''Comparison of First Generation (Dornier HM3) and Second Generation (Medstone STS) Lithotriptors: Treatment Results with 13,864 Renal and Ureteral Calculi,'' *Journal of Urology*, 153:588–592, 1995.

12. Cass, A. S., ''Extracorporeal Shock Wave Lithotripsy for Mid and Lower Ureteral Stones,'' *Journal of Endourology*, 6(5):323–326, 1992.

13. Cass, A. S., ''Extracorporeal Shock Wave Lithotripsy for Ureteral Calculi,'' *Journal of Urology*, 147:1495–1498, 1992.

14. Cass, A. S., ''The Use of Ungating with the Medstone Lithotripter,'' *Journal of Urology*, 156:896–898, 1996.

15. Claro, J. D., F. Denardi, U. Ferreira, N. R. Netto, Jr., L. B. Saldanha, and J. F. Figueiredo, ''Effects of Extracorporeal Shockwave Lithotripsy on Renal Growth and Function: An Animal Model,'' *Journal of Endourology*, 8(3):191–194, 1994.

16. Coleman, A. J. and J. E. Saunders, ''Review of the Physical Properties and Biological Effects of the High Amplitude Acoustic Fields Used in Extracorporeal Lithotripsy,'' *Ultrasonics*, 31(2):75–89, 1993.

17. Delius, M., W. Mueller, A. Goetz, H. Liebich, and W. Brendel, ''Biological Effects of Shock Waves: Kidney Hemorrhage in Dogs at a Fast Shock Wave Administration Rate of Fifteen Hertz,'' *Journal of Lithotripsy and Stone Disease*, 2(2):103–110, 1990.

18. Deliveliotis, Ch., A. Giftopoulos, G. Koutsokalis, G. Raptidis, and A. Kostakopoulos, ''The Necessity of Prophylactic Antibiotics during Extracorporeal Shock Wave Lithotripsy,'' *International Urology and Nephrology*, 29(5):517–521, 1997.

19. Deliveliotis, Ch., A. Kostakopoulos, N. Stavropoulos, E. Karagiotis, P. Kyriazis, and C. Dimopoulos, ''Extracorporeal Shock Wave Lithotripsy in 5 Patients with Aortic Aneurysm,'' *Journal of Urology*, 154:1671–1672, 1995.

20. Drach, G. W., S. Dretler, W. Fair, B. Finlayson, J. Gillenwater, D. Griffith, J. Lingeman, and D. Newman, ''Report of the United States Cooperative Study of Extracorporeal Shock Wave Lithotripsy,'' *Journal of Urology*, 135:1127–1133, 1986.

21. Ehreth, J. T., G. W. Drach, M. L. Arnett, R. B. Barnett, D. Govan, J. Lingeman, S. A. Loening, D. M. Newman, J. M. Tudor, and S. Saada, ''Extracorporeal Shock Wave Lithotripsy: Multicenter Study of Kidney and Upper Ureter Versus Middle and Lower Ureter Treatments,'' *Journal of Urology*, 152:1379–1385, 1994.

22. Elabbady, A., G. Mathes, D. D. Morehouse, J. Honey, J. Pahira, R. Zeman, J. Paquin, R. Faucher, and M. M. Elhilali, ''Safety and Effectiveness of Lithostar Shock Tube C in the Treatment of Urinary Calculi,'' *Journal of Endourology*, 9(3):225–231, 1995.

23. El-Damanhoury, H., T. Schärfe, J. Rüth, S. Roos, and R. Hohenfellner, ''Extracorporeal Shock Wave Lithotripsy of Urinary Calculi: Experience in Treatment of 3,278 Patients Using the Siemens Lithostar and Lithostar Plus,'' *Journal of Urology*, 145:484–488, 1991.

24. Elhilali, M. M., M. L. Stoller, T. C. McNamara, D. D. Morehouse, J. S. Wolf, Jr., and L. L. Keeler, Jr., ''Effectiveness and Safety of the Dornier Compact Lithotriptor: An Evaluative Multicenter Study,'' *Journal of Urology*, 155:834–838, 1996.

25. Erturk, E., A. M. Ptak, and J. Monaghan, ''Fertility Measures in Women after Extracorporeal Shockwave Lithotripsy of Distal Ureteral Stones,'' *Journal of Endourology*, 11(5):315–317, 1997.

26. FDA Guidance Document (Draft),'' Guidance for the Content of Premarket Notifications (510(k)s) for Extracorporeal Shock Wave Lithotripters Indicated for the Fragmentation of Kidney and Ureteral Calculi'' (Currently available for comment.)

27. Ferreira, U., J. D. Claro, N. R. Netto, Jr., F. Denardi, J. F. Figueiredo, and C. L. Z. Riccetto, ''Functional and Histologic Alterations in Growing Solitary Rat Kidney as a Result of Extracorporeal Shockwaves,'' *Journal of Endourology*, 9(1):45–49, 1995.

28. Grasso, M., J. Liu, B. Goldberg, and D. H. Bagley, ''Submucosal Calculi: Endoscopic and Intraluminal Sonographic Diagnosis and Treatment Options,'' *Journal of Urology*, 153:1384–1389, 1995.

29. Grasso, M., P. Loisides, M. Beaghler, and D. Bagley, ''The Case for Primary Endoscopic Managment of Upper Urinary Tract Calculi: I. A Critical Review of 121 Extracorporeal Shock-Wave Lithotripsy Failures,'' *Urology*, 45(3):363–371, 1995.

30. Greenstein, A., I. Kaver, V. Lechtman, and Z. Braf, ''Cardiac Arrhythmias during Nonsynchronized Extracorporeal Shock Wave Lithotripsy,'' *Journal of Urology*, 154:1321–1322, 1995.

31. Grenabo, L., K. Lindqvist, H. Adami, R. Bergström, and S. Pettersson, ''Extracorporeal Shock Wave Lithotripsy for the Treatment of Renal Stones,'' *Archives of Surgery*, 132:20–26 1997.

32. Groshar, D., O. Israel, J. Ginessin, D. R. Levin, B. Moskovitz, D. Front, and A. Frenkel, ''Effect of Extracorporeal Piezoelectric Lithotripsy Shock Waves on Renal Function Measured by Tc–99m–DMSA Using Spect,'' *Urology*, 38(6):537–539, 1991.

33. Gümüs, B., M. Lekili, A. R. Kandiloglu, A. Isisag, G. Temeltas, O. Nazli, and C. Büyüksu, ''Effects of Extracorporeal Shockwave Lithotripsy at Different Stages of Pregnancy in the Rabbit,'' *Journal of Endourology*, 11(5):323–326, 1997.

34. Gupta, M., D. M. Bolton, and M. L. Stoller, ''Etiology and Management of Cystine Lithiasis,'' *Urology*, 45(2):344–355, 1995.

35. Hamdy, S., D. D. Morehouse, H. Laporte, and M. M. Elhilali, Early Experience with ''Extracorporeal Shockwave Dornier Lithotriptor,'' *Journal of Endourology*, 9(3):219–223, 1995.

36. Holmberg, G., S. Spinnell, and J. Sjödin, ''Perforation of the Bowel during SWL in Prone Position,'' *Journal of Endourology*, 11(5):313–314, 1997.

37. Hosking, M. P., S. A. Morris, F. A. Klein, and C. Dobmeyer-Dittrich,'' Anesthetic Management of Patients Receiving Calculus Therapy with a Third-Generation Extracorporeal Lithotripsy Machine,'' *Journal of Endourology*, 11(5):309–311, 1997.

38. Ilker, Y., L. N. Türkeri, V. Korten, T. Tarcan, and A. Akdas, ''Antimicrobial Prophylaxis in Management of Urinary Tract Stones by Extracorporeal Shock-Wave Lithotripsy: Is It Necessary?,'' *Urology*, 46(2):165–167, 1995.

39. International Electrotechnical Commission, International Standard IEC 60601–2–36 Medical electrical equipment—Part 2: Particular requirements for the safety of equipment for extracorporeally induced lithotripsy, 1997 (IEC address: 3, rue de Varembé Geneva, Switzerland; IEC web site: ''http://www.iec.ch'').

40. International Electrotechnical Commission, International Standard IEC 61846 Ultrasonics—Pressure pulse lithotripters—Characteristics of fields, 1998 (IEC address: 3, rue de Varembé Geneva, Switzerland; IEC web site: ''http://www.iec.ch'').

41. Janetschek, G., F. Frauscher, R. Knapp, G. Höfle, R. Peschel, and G. Bartsch, ''New Onset of Hypertension after Extracorporeal Shock Wave Lithotripsy: Age Related Incidence and Prediction by Intrarenal Resistive Index,'' *Journal of Urology*, 158:346–351, 1997.

42. Kabalin, J. N., S. Lennon, H. S. Gill, V. Wolfe, and I. Perkash, ''Incidence and Management of Autonomic Dysreflexia and Other Intraoperative Problems Encountered in Spinal Cord Injury Patients Undergoing Extracorporeal Shock Wave Lithotripsy without Anesthesia on a Second Generation Lithotriptor,'' *Journal of Urology*, 149:1064–1067, 1993.

43. Kataoka, H., ''Cardiac Dysrhythmias Related to Extracorporeal Shock Wave Lithotripsy Using a Piezoelectric Lithotripter in Patients with Kidney Stones,'' *Journal of Urology*, 153:1390–1394, 1995.

44. Kataoka, H. and T. Tanigawa, ''Vasovagal Syncope Elicited by Extracorporeal Shock Wave Lithotripsy,'' *American Heart Journal*, 126:258–259, 1993.

45. Katz, R., D. Admon, and D. Pode, ''Life-Threatening Retroperitoneal Hematoma Caused by Anticoagulant Therapy for Myocardial Infarction after SWL,'' *Journal of Endourology*, 11(1):23–25, 1997.

46. Kim, H. H., J. H. Lee, M. S. Park, S. E. Lee, and S. W. Kim, ''*In Situ* Extracorporeal Shockwave Lithotripsy for Ureteral Calculi: Investigation of Factors Influencing Stone Fragmentation and Appropriate Number of Sessions for Changing Treatment Modality,'' *Journal of Endourology*, 10(6):501–505, 1996.

47. Kim, S. C. and Y. T. Moon, ''Experience with EDAP LT02 Extracorporeal Shockwave Lithotripsy in 1363 Patients: Comparison with Results of LT01 SWL in 1586 Patients,'' *Journal of Endourology*, 11(2):103–111, 1997.

48. Kim, S. C., C. H. Oh, Y. T. Moon, and K. D. Kim, ''Treatment of Steinstrasse with Repeat Extracorporeal Shock Wave Lithotripsy: Experience with Piezoelectric Lithotriptor,'' *Journal of Urology*, 145:489–491, 1991.

49. Knapp, P. M., and T. B. Kulb, ''Extracorporeal Shock Wave Lithotripsy Induced Perirenal Hematomas,'' *Journal of Urology*, 137:142A, abstract 155, 1987.

50. Knapp, P. M., T. B. Kulb, J. E. Lingeman, D. M. Newman, J. H. O. Mertz, P. G. Mosbaugh, and R. E. Steele, ''Extracorporeal Shock Wave Lithotripsy-Induced Perirenal Hematomas,'' *Journal of Urology*, 139:700–703, 1988.

51. Köhrmann, K. U., J. J. Rassweiler, M. Manning, G. Mohr, T. O. Henkel, K. P. Jünemann, and P. Alken, ''The Clinical Introduction of a Third Generation Lithotripter: Modulith SL 20,'' *Journal of Urology*, 153:1379–1383, 1995.

52. Krishnamurthi, V. and S. B. Streem, ''Long-Term Radiographic and Functional Outcome of Extracorporeal Shock Wave Lithotripsy Induced Perirenal Hematomas,'' *Journal of Urology*, 154:1673–1675, 1995.

53. Kroovand, R. L., ''Pediatric Urolithiasis,'' *Urologic Clinics of North America*, 24(1):173–184, 1997.

54. Lehtoranta, K., ''Cost Effectiveness of Different Treatment Alternatives in Urinary Stone Practice,'' *Scandinavian Journal of Urology and Nephrology*, 29:437–447, 1995.

55. Lim, D. J., R. D. Walker, III, P. I. Ellsworth, R. C. Newman, M. S. Cohen, M. A. Barraza, and P. S. Stevens, ''Treatment of Pediatric Urolithiasis between 1984 and 1994,'' *Journal of Urology*, 156:702–705, 1996.

56. Lingeman, J. E., ''Extracorporeal Shock Wave Lithotripsy: Development, Instrumentation, and Current Status,'' *Urologic Clinics of North America*, 24(1):185–211, 1997.

57. Lingeman, J. E., ''Lithotripsy and Surgery,'' *Seminars in Nephrology*, 16(5):487–498, 1996.

58. Lingeman, J. E. and T. B. Kulb, ''Hypertension following Extracorporeal Shock Wave Lithotripsy,'' *Journal of Urology*, 137:142A, abstract 154, 1987.

59. Lingeman, J. E., D. M. Newman, Y. I, Siegel, T. Eichhorn, and K. Parr, ''Shock Wave Lithotripsy with the Dornier MFL 5000 Lithotripter Using an External Fixed Rate Signal,'' *Journal of Urology*, 154:951–954, 1995.

60. Lingeman, J. E., J. R. Woods, and D. R. Nelson, ''Commentary on ESWL and Blood Pressure,'' *Journal of Urology*, 154:2–4, 1995.

61. Lingeman, J. E., J. R. Woods, and P. D. Toth, ''Blood Pressure Changes Following Extracorporeal Shock Wave Lithotripsy and Other Forms of Treatment for Nephrolithiasis,'' *The Journal of the American Medical Association*, 263(13):1789–1794, 1990.

62. Lipski, B., J. Miller, G. Rigaud, G. Stack, and C. Marsh, ''Acute Renal Failure from a Subcapsular Hematoma in a Solitary Kidney: An Unusual Complication of Extracorporal Shock Wave Lithotripsy,'' *Journal of Urology*, 157:2245, 1997.

63. Marcuzzi, D., R. Gray, and T. Wesley-James, ''Symptomatic Splenic Rupture following Extracorporeal Shock Wave Lithotripsy,'' *Journal of Urology*, 145:547–548, 1991.

64. Meretyk, S., O. N. Gofrit, O. Gafni, D. Pode, A. Shapiro, A. Verstandig, T. Sasson, G. Katz, and E. H. Landau, ''Complete Staghorn Calculi: Random Prospective Comparison Between Extracorporeal Shock Wave Lithotripsy Monotherapy and Combined with Percutaneous Nephrostolithotomy,'' *Journal of Urology*, 157:780–786, 1997.

65. Miller, D. L. and R. M. Thomas, ''Thresholds for Hemorrhages in Mouse Skin and Intestine Induced by Lithotripter Shock Waves,'' *Ultrasound in Medicine and Biology*, 21(2):249–257, 1995.

66. Mobley, T. B., D. A. Myers, J. McK. Jenkins, W. B. Grine, and W. R. Jordan, ''Effects of Stents on Lithotripsy of Ureteral Calculi: Treatment Results with 18,825 Calculi Using the Lithostar Lithotripter,'' *Journal of Urology*, 152:53–56, 1994.

67. Morse, R. M. and M. I. Resnick, ''Ureteral Calculi: Natural History and Treatment in an Era of Advanced Technology,'' *Journal of Urology*, 145:263–265, 1991.

68. Müller-Mattheis, V. G. O., D. Schmale, M. Seewald, H. Rosin, and R. Ackermann, ''Bacteremia During Extracorporeal Shock Wave Lithotripsy of Renal Calculi,'' *Journal of Urology*, 146:733–736, 1991.

69. Myers, D. A., T. B. Mobley, J. McK. Jenkins, W. B. Grine, and W. R. Jordan, ''Pediatric Low Energy Lithotripsy with the Lithostar,'' *Journal of Urology*, 153:453–457, 1995.

70. Newman, D. M., and M. Kaefer, ''Pediatric ESWL: Suitability Hinges on Long-Term Renal Effects,'' *Contemporary Urology*, pp. 71–76, September, 1992.

71. Ohmori, K., T. Matsuda, Y. Horii, and O. Yoshida, ''Effects of Shock Waves on the Mouse Fetus,'' *Journal of Urology*, 151:255–258, 1994.

72. Pacík, D., T. Hanák, P. Kumstát, M. Turjanica, P. Jelínek, and J. Kladensk , ''Effectiveness of SWL for Lower-Pole Caliceal Nephrolithiasis: Evaluation of 452 Cases,'' *Journal of Endourology*, 11(5):305–307, 1997.

73. Phillips, M. T., W. H. Merrell, and R. P. Knobloch, ''Extracorporeal Shock Wave Lithotripsy in a Patient on Chronic

Anticoagulant Therapy,'' *Journal of Lithotripsy and Stone Disease*, 3(4):353–356, 1991.

74. Preminger, G. M., ''Review: *In Vivo* Effects of Extracorporeal Shock Wave Lithotripsy: Animal Studies,'' *Journal of Endourology*, 7(5):375–378, 1993.

75. Psihramis, K. E., M. A. S. Jewett, C. Bombardier, D. Caron, M. Ryan, and the Toronto Lithotripsy Associates, ''Lithostar Extracorporeal Shock Wave Lithotripsy: The First 1,000 Patients,'' *Journal of Urology*, 147:1006–1009, 1992.

76. Radiation Safety Committee of the European Federation of Societies for Ultrasound in Medicine and Biology, ''Guidelines for the Safe Use of Extracorporeal Shock-Wave Lithotripsy (ESWL) Devices,'' *Ultrasound in Medicine and Biology*, 20(3):315–316, 1994.

77. Rahav, G., H. Strul, D. Pode, and M. Shapiro, ''Bacteriuria following Extracorporeal Shock-Wave Lithotripsy in Patients Whose Urine Was Sterile before the Procedure,'' *Clinical Infectious Diseases*, 20:1317–1320, 1995.

78. Rashid, P., D. Steele, and J. Hunt, ''Splenic Rupture after Extracorporeal Shock Wave Lithotripsy,'' *Journal of Urology*, 156:1756–1757, 1996.

79. Rassweiler, J., A. Westhauser, P. Bub, and F. Eisenberger, ''Second-Generation Lithotripters: A Comparative Study,'' *Journal of Endourology*, 2(2):193–204, 1988.

80. Raz, R., A. Zoabi, M. Sudarsky, and J. Shental, ''The Incidence of Urinary Tract Infection in Patients without Bacteriuria Who Underwent Extracorporeal Shock Wave Lithotripsy,'' *Journal of Urology*, 151:329–330, 1994.

81. Robertson, J. B., M. O. Koch, F. K. Kirchner, Jr., and J. A. Smith, Jr., ''Suboptimal Treatment Results with the Therasonics Lithotripter,'' *Journal of Urology*, 152:317–319, 1994.

82. Roessler, W., P. Steinbach, R. Seitz, F., Hofstaedter, and W. F. Wieland, ''Mechanisms of Shockwave Action in the Human Kidney,'' *Journal of Endourology*, 9(6):443–448, 1995.

83. Roessler, W., W. F. Wieland, P. Steinbach, F. Hofstaedter, S. Thüroff, and C. Chaussy, ''Side Effects of High-Energy Shockwaves in the Human Kidney: First Experience with Model Comparing Two Shockwave Sources,'' *Journal of Endourology*, 10(6):507–511, 1996.

84. Roth, R. A. and C. F. Beckmann, ''Complications of Extracorporeal Shock-Wave Lithotripsy and Percutaneous Nephrolithotomy,'' *Urologic Clinics of North America*, 15(2):155–166, 1988.

85. Ruiz, H. and B. Saltzman, ''Aspirin-Induced Bilateral Renal Hemorrhage after Extracorporeal Shock Wave Lithotripsy Therapy: Implications and Conclusions,'' *Journal of Urology*, 143:791–792, 1990.

86. Ryan, P. C., B. J. Jones, E. W. Kay, P. Nowlan, E. A. Kiely, E. F. Gaffney, and M. R. Butler, ''Acute and Chronic Bioeffects of Single and Multiple Doses of Piezoelectric Shockwaves (EDAP LT.01),'' *Journal of Urology*, 145:399–404, 1991.

87. Schmidt, A., J. Seibold, P. Bub, and F. Eisenberger, ''Urologic Experience with the Dornier Multipurpose Lithotripter MPL 9000,'' *Journal of Lithotripsy and Stone Disease*, 3(3):241–248, 1991.

88. Segura, J. W., G. M. Preminger, D. G. Assimos, S. P. Dretler, R. I. Kahn, J. E. Lingeman, J. N. Macaluso, Jr., and D. L. McCullough, ''Nephrolithiasis Clinical Guidelines Panel Summary Report on the Management of Staghorn Calculi,'' *Journal of Urology*, 151:1648–1651, 1994.

89. Simon, D., ''Experience with 500 Extracorporeal Shockwave Lithotripsy Patients Using a Low-Cost Unit,'' *Journal of Endourology*, 9(3):215–218, 1995.

90. Singal, R. K. and J. D. Denstedt, ''Contemporary Management of Ureteral Stones,'' *Urologic Clinics of North America*, 24(1):59–70, 1997.

91. Streem, S. B., ''Contemporary Clinical Practice of Shock Wave Lithotripsy: A Reevaluation of Contraindications,'' *Journal of Urology*, 157:1197–1203, 1997.

92. Stoller, M. L., L. Litt, and R. G. Salazar, ''Severe Hemorrhage after Extracorporeal Shock-Wave Lithotripsy,'' *Annals of Internal Medicine*, 111(7):612–613, 1989.

93. Tolon, M., C. Miroglu, H. Erol, J. Tolon, D. Acar, E. Bazmanoglu, A. Erkan, and S. Amato, ''A Report on Extracorporeal Shock Wave Lithotripsy Results on 1,569 Renal Units in an Outpatient Clinic,'' *Journal of Urology*, 145:695–698, 1991.

94. Transcripts of the Gastroenterology and Urology Devices Advisory Panel meeting, July 30, 1998.

95. Tuteja, A. K., J. P. Pulliam, T. H. Lehman, and L. W. Elzinga, ''Anuric Renal Failure from Massive Bilateral Renal Hematoma following Extracorporeal Shock Wave Lithotripsy,'' *Urology*, 50(4):606–608, 1997.

96. Van Arsdalen, K. N., S. Kurzweil, J. Smith, and R. M. Levin, ''Effects of Lithotripsy on Immature Rabbit Bone and Kidney Develoment,'' *Journal of Urology*, 146:213–216, 1991.

97. Vassolas, G., R. A. Roth, and F. J. Venditti, Jr., ''Effect of Extracorporeal Shock Wave Lithotripsy on Implantable Cardioverter Defibrillator,'' *PACE*, 16:1245–1248, 1993.

98. Vaughan E. D., Jr., J. N. Tobin, M. H. Alderman, R. E. Sosa, G. W. Drach, and the NEMA Kidney Stone Blood Pressure Study Group (KSBPS), ''Extracorporeal Shock Wave Monotherapy Does Not Cause Renal Dysfunction or Elevated Blood Pressure,'' *Journal of Urology*, 155:539A, abstract 915, 1996.

99. Williams, C. M., J. V. Kaude, R. C. Newman, J. C. Peterson, and W. C. Thomas, ''Extracorporeal Shock Wave Lithotripsy: Long-Term Complications,'' *American Journal of Roentgenology*, 150:311–315, 1988.

100. Willis, L. R., A. P. Evan, B. A. Connors, N. S. Fineberg, and J. E. Lingeman, ''Effects of SWL on Glomerular Filtration Rate and Renal Plasma Flow in Uninephrectomized Minipigs,'' *Journal of Endourology*, 11(1):27–32, 1997.

101. Willis, L. R., A. P. Evan, B. A. Connors, G. Reed, N. S. Fineberg, and J. A. Lingeman, ''Effects of Extracorporeal Shock Wave Lithotripsy to One Kidney on Bilateral Glomerular Filtration Rate and PAH Clearance in Minipigs,'' *Journal of Urology*, 156:1502–1506, 1996.

102. Winters, J. C. and J. N. Macaluso, Jr., ''Ungated Medstone Outpatient Lithotripsy,'' *Journal of Urology*, 153:593–595, 1995.

103. Yeaman, L. D., C. P. Jerome, and D. L. McCullough, ''Effects of Shock Waves on the Structure and Growth of the Immature Rat Epiphysis,'' *Journal of Urology*, 141:670–674, 1989.

104. Zommick, J., R. Leveillee, A. Zabbo, L. Colasanto, and D. Barrette, ''Comparison of General Anesthesia and Intravenous Sedation-Analgesia for SWL,'' *Journal of Endourology*, 10(6):489–491, 1996.

XI. Environmental Impact

The agency has determined under 21 CFR 25.34(b) that this reclassification action is of a type that does not individually or cumulatively have a significant effect on the human environment. Therefore, neither an environmental assessment nor an environmental impact statement is required.

XII. Analysis of Impacts

FDA has examined the impacts of the proposed rule under Executive Order 12866 and the Regulatory Flexibility Act (5 U.S.C. 601–612) (as amended by subtitle D of the Small Business Regulatory Fairness Act of 1996 (Pub. L. 104–121), and the Unfunded Mandates Reform Act of 1995 (Pub. L. 104–4)). Executive Order 12866 directs agencies to assess all costs and benefits of available regulatory alternatives and, when regulation is necessary, to select regulatory approaches that maximize net benefits (including potential economic, environmental, public health and safety, and other advantages, distributive impacts and equity). The agency believes that this reclassification action is consistent with the regulatory philosophy and principles identified in the Executive Order. In addition, the reclassification action is not a significant regulatory action as defined by the Executive Order and so is not subject to review under the Executive Order.

The Regulatory Flexibility Act requires agencies to analyze regulatory options that would minimize any significant impact of a rule on small entities. Reclassification of the device from class III to class II will relieve manufacturers of the cost of complying with the premarket approval requirements in section 515 of the act. Because reclassification will reduce regulatory costs with respect to this device, it will impose no significant economic impact on any small entities, and it may permit small potential competitors to enter the marketplace by lowering their costs. The agency therefore certifies that this reclassification action, if finalized, will

not have a significant economic impact on a substantial number of small entities. In addition, this reclassification action will not impose costs of $100 million or more on either the private sector or state, local, and tribal governments in the aggregate, and therefore a summary statement of analysis under section 202(a) of the Unfunded Mandates Reform Act of 1995 is not required.

XIII. Request for Comments

Interested persons may, on or before May 10, 1999 submit to the Dockets Management Branch (address above) written comments regarding this document. Two copies of any comments are to be submitted, except that individuals may submit one copy. Comments are to be identified with the docket number found in brackets in the heading of this document. Received comments may be seen in the office above between 9 a.m. and 4 p.m., Monday through Friday.

List of Subjects in 21 CFR Part 876

Medical devices.

Therefore, under the Federal Food, Drug, and Cosmetic Act and under authority delegated to the Commissioner of Food and Drugs, it is proposed that 21 CFR part 876 be amended as follows:

PART 876—GASTROENTEROLOGY–UROLOGY DEVICES

1. The authority citation for 21 CFR part 876 continues to read as follows:

Authority: 21 U.S.C. 351, 360, 360c, 360e, 360j, 360l, 371.

2. § 876.5990 is added to subpart F to read as follows:

§ 876.5990 Extracorporeal shock wave lithotripter.

(a) *Identification*. An extracorporeal shock wave lithotripter is a device that focuses ultrasonic shock waves into the body to noninvasively fragment urinary calculi within the kidney and ureter. The primary components of the device are a shock wave generator, high voltage generator, control console, imaging/localization system, and patient table. Prior to treatment, the urinary stone is targeted using either an integral or stand-alone localization/imaging system. Shock waves are typically generated using electrostatic spark discharge (spark gap), electromagnetically repelled membranes, or piezoelectric crystal arrays, and focused onto the stone with either a specially designed reflector, dish, or acoustic lens. The shock waves are created under water within the shock wave generator, and are transferred to the patient's body through a water-filled rubber cushion or by direct contact of the patient's skin with the water. After the stone has been fragmented by the focused shock waves, the fragments pass out of the body with the patient's urine.

(b) *Classification*. Class II (special controls).

(1) Labeling that contains the statements listed in the appendix in addition to other required labeling information.

(2) FDA guidance document entitled ''Guidance for the Content of Premarket Notifications (510(k)'s) for Extracorporeal Shock Wave Lithotripters Indicated for the Fragmentation of Kidney and Ureteral Calculi.''

APPENDIX TO § 876.5990: Labeling Restrictions

a. Contraindications:

Do not use the device in patients with:

Anatomy which precludes focusing the device at the target stone, such as severe obesity or excessive spinal curvature.

Arterial calcification or vascular aneurysm in the lithotripter's shock wave path.

Coagulation abnormalities (as indicated by abnormal prothrombin time, partial thromboplastin time, or bleeding time) or those currently receiving anticoagulants (including aspirin).

Confirmed or suspected pregnancy.

Urinary tract obstruction distal to the stone.

b. Warnings:

Air-filled interfaces in shock wave path: Do not apply shock waves to air-filled areas of the body, i.e., intestines or lungs. Shock waves are rapidly dispersed by passage through an air-filled interface, which can cause bleeding and other harmful side effects.

Anticoagulants: Patients receiving anticoagulants (including aspirin) should temporarily discontinue such medication prior to extracorporeal shock wave lithotripsy to prevent severe hemorrhage.

Bilateral stones: Do not perform bilateral treatment of kidney stones in a single treatment session, because either bilateral renal injury or total urinary tract obstruction by stone fragments may result. Patients with bilateral kidney stones should be treated using a separate treatment session for each side. In the event of total urinary obstruction, corrective procedures may be needed to ensure drainage of urine.

Cardiac arrhythmia during treatment: If a patient experiences cardiac arrhythmia during treatment at a fixed shock wave repetition rate, shock wave delivery should either be terminated or switched to an ECG-gated mode (i.e., delivery of the shock wave during the refractory period of the patient's cardiac cycle). As a general practice, patients with a history of cardiac arrhythmia should be treated in the ECG-gated mode. (If the system is capable of delivering shock waves at a fixed frequency.)

Cardiac disease, immunosuppression, and diabetes mellitus: Prophylactic antibiotics should be administered prior to extracorporeal shock wave lithotripsy treatment to patients with cardiac disease (including valvular disease), immunosuppression, and diabetes mellitus, to prevent bacterial and/or subacute endocarditis.

Cardiac monitoring: Always perform cardiac monitoring during lithotripsy treatment, because the use of extracorporeal shock wave lithotripsy has been reported to cause ventricular cardiac arrhythmias in some individuals. This warning is especially important for patients who may be at risk of cardiac arrhythmia due to a history of cardiac irregularities or heart failure.

Infected stones: Prophylactic antibiotics should be administered prior to treatment whenever the possibility of stone infection exists. Extracorporeal shock wave lithotripsy treatment of pathogen-harboring calculi could result in systemic infection.

Pacemaker or implantable defibrillator: To reduce the incidence of malfunction to a pacemaker or implantable defibrillator, the pulse generator should be programmed to a single chamber, non-rate responsive mode (pacemakers) or an inactive mode (implantable defibrillators) prior to lithotripsy, and evaluated for proper function post-treatment. Do not focus the lithotripter's shock wave through or near the pulse generator.

c. Precautions:

Impacted or embedded stones: The effectiveness of extracorporeal shock wave lithotripsy may be limited in patients with impacted or embedded stones. Alternative procedures are recommended for these patients.

Radiographic followup: All patients should be followed radiographically after treatment until stone-free or there are no remaining stone fragments which are likely to cause silent obstruction and loss of renal function.

Renal injury: To reduce the risk of injury to the kidney and surrounding tissues, it is recommended that: (1) The number of shock waves administered during each treatment session be minimized; (2) retreatment to the same

kidney/anatomical site occur no sooner than 1 month after the initial treatment; and (3) each kidney/anatomical site be limited to a total of three treatment sessions.

Small ureteral stones: Small middle and lower ureteral stones, 4 to 6 mm in largest dimension, are likely to pass spontaneously. Therefore, the risks and benefits of extracorporeal shock wave lithotripsy should be carefully assessed in this patient population.

Staghorn stones: The effectiveness of extracorporeal shock wave lithotripsy may be limited in patients with either staghorn or large (≤ 20 mm in largest dimension) stones. Alternative procedures are recommended for these patients.

d. Patient Selection and Treatment:

Children: The safety and effectiveness of this device in the treatment of urolithiasis in children have not been demonstrated. Although children have been treated with shock wave therapy for upper urinary tract stones, experience with lithotripsy in such cases is limited. Studies indicate that there are growth plate disturbances in the epiphyses of developing long bones in rats subjected to shock waves. The significance of this finding to human experience is unknown.

Women of childbearing potential: The treatment of lower ureteral stones should be avoided in women of childbearing potential. The application of shock wave lithotripsy to this patient population could possibly result in irreversible damage to the female reproductive system and to the unborn fetus in the undiagnosed pregnancy.

e. Adverse Events:

Potential adverse events associated with the use of extracorporeal shock wave lithotripsy include those listed below, categorized by frequency and individually described:

1. *Potential Adverse Events of Extracorporeal Shock Wave Lithotripsy Categorized by Frequency*:

a. Commonly reported (> 20 percentage of patients): Hematuria, pain/renal colic, skin redness at shock wave entry site.

b. Occasionally reported (1 to 20 percentage of patients): Cardiac arrhythmia, urinary tract infection, urinary obstruction/steinstrasse, skin bruising at shock wave entry site, fever (> 38EC), nausea/vomiting.

c. Infrequently reported (< 1 percentage of patients): Hematoma (perirenal/intrarenal), renal injury.

2. *Description of Adverse Events of Extracorporeal Shock Wave Lithotripsy*:

Cardiac arrhythmia: Cardiac arrhythmias, most commonly premature ventricular contractions, are generally reported during extracorporeal shock wave lithotripsy at fixed shock wave delivery in 2 to 20 percentage of patients. These cardiac disturbances rarely pose a serious risk to the healthy patient, and typically resolve spontaneously upon synchronizing the shock waves with the refractory period of the ventricular cycle (i.e., ECG gating) or terminating treatment.

Fever (> 38 C): Fever is occasionally reported after lithotripsy, and may be secondary to infection.

Hematoma (perirenal/intrarenal): Clinically significant intrarenal or perirenal hematomas occur in < 1 percentage of lithotripsy treatments. Typically patients who experience this complication present with severe flank pain. Although clinically significant hematomas often resolve with conservative management, severe hemorrhage and death have been reported. Management of severe renal hemorrhage includes the administration of blood transfusions, percutaneous drainage, or surgical intervention.

Hematuria: Hematuria occurs following most treatments, is believed to be secondary to trauma to the renal parenchyma, and usually resolves spontaneously within 24 to 48 hours of treatment.

Nausea/vomiting: Transient nausea and vomiting are occasionally reported immediately after lithotripsy, and may be associated with either pain or the administration of sedatives or analgesia.

Pain/renal colic: Pain/renal colic commonly occurs during and immediately after treatment, and typically resolves spontaneously. Temporary pain/renal colic may also occur secondary to the passage of stone fragments, and can be managed with medication.

Renal injury: Extracorporeal shock wave lithotripsy procedures have been known to cause damage to the treated kidney. The potential for injury, its long-term significance, and its duration are unknown.

Skin bruising at shock wave entry site: Skin bruising at the shock wave entry site occasionally occurs after treatment, and it typically resolves spontaneously.

Skin redness at shock wave entry site: Skin redness at the shock wave entry site commonly occurs during and immediately after treatment, and typically resolves spontaneously.

Urinary obstruction/steinstrasse: Urinary obstruction occurs in up to 6 percent of patients following lithotripsy due to stone fragments becoming lodged in the ureter, and may be the result of either a single stone fragment or the accumulation of multiple small stone particles (i.e., steinstrasse). Patients with urinary obstruction typically present with persistent pain, and may be at risk of developing hydronephrosis with subsequent renal failure if the obstruction is not promptly treated. Intervention is necessary if the obstructing fragments do not pass spontaneously.

Urinary tract infection: Urinary tract infection (UTI) occurs in 1 to 7 percent of patients following extracorporeal shock wave lithotripsy as a result of the release of bacteria from the fragmentation of infected calculi, and infrequently results in pyelonephritis or sepsis. The risk of infectious complications secondary to extracorporeal shock wave lithotripsy can be minimized through the use of prophylactic antibiotics in patients with UTI and infection stones.

Dated: January 21, 1999.

Linda S. Kahn,

Deputy Director for Regulations Policy, Center for Devices and Radiological Health.

[FR Doc. 99–2689 Filed 2–5–99; 8:45 am]

BILLING CODE 4160–01–F

DEPARTMENT OF TRANSPORTATION

Federal Highway Administration

23 CFR Part 180

Federal Railroad Administration

49 CFR Part 261

Federal Transit Administration

49 CFR Part 640

[FHWA Docket No. FHWA–98–47–15]

RIN 2125–AE49

Credit Assistance for Surface Transportation Projects

AGENCY: Federal Highway Administration (FHWA), Federal Railroad Administration (FRA), Federal Transit Administration (FTA), U.S. Department of Transportation (DOT).

ACTION: Notice of proposed rulemaking (NPRM); request for comments.

SUMMARY: This document proposes to implement a new program enacted under the Transportation Infrastructure Finance and Innovation Act of 1998 (TIFIA), to provide credit assistance to surface transportation projects. The TIFIA authorizes the DOT to provide secured (direct) loans, lines of credit, and loan guarantees to public and private sponsors of eligible surface transportation projects. Projects will be evaluated and selected by the Secretary of Transportation. Following selections,

individual credit agreements will be developed through negotiations between the project sponsors and the DOT. This document solicits comments on a proposed regulation to establish a new credit assistance program for surface transportation projects; and the process by which the DOT, through the FHWA, the FRA, and the FTA, will administer such credit assistance.

DATES: Comments must be submitted on or before March 10, 1999.

ADDRESSES: Your signed, written comments must refer to the docket number appearing at the top of this document and you must submit the comments to the Docket Clerk, U.S. DOT Dockets, Room PL–401, 400 Seventh Street, SW, Washington, DC 20590–0001. All comments received will be available for examination at the above address between 9:00 a.m. and 5:00 p.m., e.t., Monday through Friday, except Federal holidays. Those desiring notification of receipt of comments must include a self-addressed, stamped envelope or postcard.

FOR FURTHER INFORMATION CONTACT: *FHWA:* Mr. Max Inman, Office of Budget and Finance, Federal-Aid Financial Management Division, (202) 366–0673. *FRA:* Ms. JoAnne McGowan, Office of Passenger and Freight Services, Freight Program Division, (202) 493–6390. *FTA:* Mr. Paul Marx, Office of Policy Development, (202) 366–1734. Department of Transportation, 400 Seventh Street, SW, Washington, DC, 20590. Office hours are from 7:45 a.m. to 4:15 p.m., e.t., Monday through Friday, except Federal holidays. Hearing- and speech-impaired persons may access this number via TTY by calling the Federal Information Relay Service at 1–800–877–8339.

SUPPLEMENTARY INFORMATION:

Electronic Access

Internet users may access all comments received by the U.S. DOT Dockets, Room PL–401, by using the universal resource locator (URL) **http://dms.dot.gov**. It is available 24 hours each day, 365 days each year. Please follow the instructions on-line for more information and help. An electronic copy of this document may be downloaded using a modem and suitable communications software from the Government Printing Office's Electronic Bulletin Board Service at (202) 512–1661. Internet users may reach the **Federal Register**'s home page at http://www.nara.gov/fedreg and the Government Printing Office's web page at **http://www.access.gpo.gov/nara**.

Additional information on the TIFIA program and credit assistance for surface transportation projects generally is available at the TIFIA web site at http://tifia.fhwa.dot.gov. Among other information, the DOT will provide responses to commonly asked questions and information on program participation.

Background

The Transportation Equity Act for the 21st Century (TEA–21), Pub. L. 105–178, 112 Stat. 107, created two new Federal credit programs: The Transportation Infrastructure Finance and Innovation Act of 1998 (TIFIA) and the Railroad Rehabilitation and Improvement Financing Program (RRIF). RRIF will be addressed in a separate notice of proposed rulemaking. TIFIA, as amended by section 9007, Pub. L. 105–206, 112 Stat. 685, 849, and codified at 23 U.S.C. 181–189, establishes a new Federal credit program for surface transportation projects. Funding for this program is limited, meaning that projects obtaining assistance under TIFIA will be selected on a competitive basis. Final selections of projects will be made by the Secretary of Transportation.

Credit assistance programs such as TIFIA are designed to help financial markets develop the capability to supplement the role of the Federal Government in helping finance the costs of large projects of national significance. Developing, implementing, and evaluating financial assistance programs such as TIFIA is a crucial mission of the DOT. To help ensure financial and programmatic success, the DOT is establishing a multi-agency Credit Program Steering Committee and Working Group. The Steering Committee and Working Group are comprised of representatives from the Office of the Secretary, the Office of Intermodalism, the FHWA, the FRA, and the FTA, as well as other DOT agencies and offices. The Steering Committee and Working Group will coordinate and monitor all policy decisions and implementation actions associated with this Federal credit assistance program.

Outreach efforts have already been made to facilitate the implementation of TIFIA. At a July 13, 1998, meeting sponsored by the American Association of State Highway and Transportation Officials, DOT representatives met with over 100 State transportation officials to discuss implementation of provisions of TEA–21, including the Act's Federal credit assistance programs. On September 14, 1998, a public focus group meeting of about 70 Federal and State officials, project sponsors, and members of the financial community was held in New York City to discuss the provision of credit assistance under TEA–21 programs. Another public focus group meeting of about 60 governmental and private sector officials was held on December 8, 1998, near San Diego, California. On-going DOT activities include meeting with capital markets financial experts and disseminating program information to the public for their comments.

Program Information

Funding

The TIFIA authorizes annual funding levels for both total annual credit amounts (i.e., the total principal amounts that may be disbursed in the form of direct loans, loan guarantees, or lines of credit) and subsidy amounts (i.e., the amounts of budget authority available to cover the estimated present value of default losses associated with the provision of credit instruments, net of any fee income). Funding for the subsidy amounts is provided in the form of budget authority funded from the Highway Trust Fund, other than the Mass Transit Account. As a practical example, for fiscal year 1999, TIFIA provides $80 million in budget authority to fund the subsidy costs associated with a total nominal amount of direct loans, loan guarantees, and lines of credit that is limited to $1.6 billion. Depending on the individual risk assessments made for each of the projects receiving assistance, the total amount of credit assistance provided in fiscal year 1999 may be less than the $1.6 billion limitation.

Total Federal credit assistance authorized under TIFIA is limited to $1.6 billion in fiscal year 1999; $1.8 billion in fiscal year 2000; $2.2 billion in fiscal year 2001; $2.4 billion in fiscal year 2002; and $2.6 billion in fiscal year 2003. These amounts lapse if not awarded by the end of the fiscal year for which they are provided.

To support this assistance by funding the required subsidy amounts, TIFIA provides budget authority of $80 million in fiscal year 1999; $90 million in fiscal year 2000; $110 million in fiscal year 2001; $120 million in fiscal year 2002; and $130 million in fiscal year 2003. This budget authority is subject to annual obligation limitations that may be established in appropriations law. Of the amounts made available, the Secretary may use up to $2 million for each of the fiscal years for administrative expenses. Unobligated budget authority remains available for obligation in subsequent years.

Credit Instruments

Three types of credit instruments are permitted under TIFIA: secured (direct) loans, loan guarantees, and lines of credit. General rules concerning the terms governing these credit instruments appear at 23 U.S.C. 183 and 184. More specific terms will be determined on a project-specific basis during negotiations between the DOT and successful applicants.

Eligibility

Sections 181 and 182 of title 23, U.S.C., describe the conditions that govern a project's eligibility for assistance under TIFIA. Projects shall have eligible costs of at least $100 million or an amount equal to 50 percent of Federal-aid highway funds apportioned to the State in which the project is located for the most recently completed fiscal year, whichever is lesser. Projects principally involving the installation of an intelligent transportation system (ITS) must cost at least $30 million. To be eligible for assistance, projects must be classified within the following categories:

1. Surface transportation projects as defined under title 23 or chapter 53 of title 49 of the United States Code;
2. International bridge or tunnel projects for which an international entity authorized under Federal or State law is responsible;
3. Intercity passenger bus or rail facilities and vehicles, including those owned by the National Railroad Passenger Corporation and components of magnetic levitation transportation systems; or
4. Publicly-owned intermodal surface freight transfer facilities, provided that the facilities:

(a) are located on or adjacent to National Highway System routes or connections to the National Highway System, and (b) are not seaports or airports.

Application Process

Public or private applicants for credit assistance will be required to submit applications to the DOT in order to be considered for approval. Each fiscal year for which credit assistance is available, the DOT will publish a **Federal Register** notice to solicit applications for credit assistance. This notice will also be posted on the TIFIA web site, at the address cited above. The notice will specify the relevant due dates for that year's application submissions and funding approvals, as well as the address to which applications should be sent. It will also advise potential applicants of the estimated amount of funding available to support TIFIA credit instruments in the current and future fiscal years. An application checklist is appended to this NPRM. Respondents are encouraged to comment on the content of this checklist, which will serve as the basis for a standard application form. Detailed application information will be contained in a handbook of program guidelines that is currently being developed by the DOT and will be posted on the TIFIA web site and made available to the public at the time a solicitation for applications is published.

Charges

The DOT will require a non-refundable initiation charge for each project applying for credit assistance under TIFIA. The DOT may also require an additional credit processing charge for projects selected to receive assistance. The proceeds of any such charges will equal a portion of the costs to the Federal Government of soliciting and evaluating applications, selecting projects to receive assistance, and negotiating credit agreements. For fiscal year 1999, the DOT proposes an application initiation charge of $5,000 for each project applying for credit assistance under TIFIA. The DOT does not propose any credit processing charges for fiscal year 1999. For fiscal years 2000 and beyond, the DOT may adjust the amount of the application initiation charge, and will determine the appropriate amount of the credit processing charge based on early program implementation experience in fiscal year 1999. The DOT will publish these amounts in each **Federal Register** solicitation for applications.

The Secretary cannot accept or compel from borrowers the subsidy costs of TIFIA credit instruments. However, the Secretary does have the authority to establish fees at a level sufficient to cover all or a portion of the subsidy costs to the Federal Government of providing credit assistance under TIFIA. Therefore, such fees could potentially reduce the subsidy cost of a TIFIA credit instrument to zero. That is to say, if in a given year there is insufficient budget authority to fund the credit instrument for a qualified project that has been selected to receive TIFIA assistance, the DOT may increase the application initiation charge or the credit processing charge on the approved applicant to reduce the subsidy cost of that project. Note that any such fees or charges may not be included among total project costs for the purpose of calculating the maximum 33 percent credit amount of TIFIA assistance.

Limitations on Assistance

The amount of credit assistance that may be provided to a project under TIFIA is limited to not more than 33 percent of eligible project costs. Costs incurred prior to a project sponsor's submission of an application for credit assistance may be considered in calculating eligible project costs only upon approval by the DOT. In addition, applicants shall not include application charges or any other expenses associated with the application process (such as charges associated with obtaining the required preliminary rating opinion letter, as discussed below) in the total project cost. No costs financed internally or with interim funding may be reimbursed later than a year following substantial completion of the project.

Within the overall credit assistance limitation of 33 percent of eligible project costs, the DOT may consider making multi-year contingent commitments of budget authority and associated credit assistance for especially large projects with extended construction periods and financing needs. In this instance, any reservation of future-year funding shall be made through a letter of intent and shall be contingent on the project's demonstrating satisfactory progress to the DOT. Depending on the overall demand for credit assistance under TIFIA, the DOT may limit such contingent commitments to 50 percent of the budget authority becoming available in applicable future years. If such a multi-year commitment is made, each year's loan will be tied to distinct, clearly identified project segments or stages.

Rating Requirement

The TIFIA allows the DOT to partially fund a credit instrument up to the estimated subsidy amount based on a preliminary rating opinion letter. However, the DOT proposes to provide credit assistance only after a formal credit agreement has been executed and the project's senior obligations have obtained a formal investment-grade rating.

In administering this provision, the DOT will require each applicant to furnish a preliminary rating opinion letter as part of the application process. The applicant is responsible for identifying and approaching one or more rating agencies to obtain such letter. This letter is to indicate that the applicant project's senior obligations have the potential of attaining an

investment-grade rating. This letter will allow the DOT to evaluate the application and potentially select the project and execute a term sheet upon which funds are obligated. The disbursement of any funds will be contingent upon the execution of a formal credit agreement between the DOT and the project sponsor and the receipt of a formal investment-grade rating on the project's senior obligations. This rating must apply to all project obligations with claims senior to that of the Federal credit instrument on the security pledged to the Federal credit instrument.

As suggested by the preceding paragraphs, the DOT's Federal credit instrument may have a junior claim to other debt issued for the project in terms of its priority interest in the project's pledged security. However, the DOT's claim on assets should not be subordinated to the claims of other creditors in the event of a default leading to bankruptcy, insolvency, or liquidation of the obligor. The DOT's interest may include collateral other than pledged revenues.

Threshold Criteria

To be eligible to receive Federal credit assistance under TIFIA, a project shall meet the following five threshold criteria:

(1) The project shall be included in a State transportation plan and, at such time as an agreement to make a Federal credit instrument is entered into under this Act, in an approved State Transportation Improvement Program.

(2) A State, local servicer, or other entity undertaking the project shall submit a project application to the Secretary of Transportation;

(3) A project shall have eligible project costs that are reasonably anticipated to equal or exceed the lesser of $100 million or 50 percent of the amount of Federal-aid highway funds apportioned for the most recently completed fiscal year to the State in which the project is located (in the case of a project principally involving the installation of Intelligent Transportation Systems (ITS), eligible project costs shall be reasonably anticipated to equal or exceed $30 million);

(4) Project financing shall be repayable, in whole or in part, from tolls, user fees or other dedicated revenue sources; and

(5) In the case of a project that is undertaken by an entity that is not a State or local government or an agency or instrumentality of a State or local government, the project that the entity is undertaking shall be included in the State transportation plan and an approved State Transportation Improvement Program.

With this rulemaking, the DOT elaborates on criterion 4 (repayment of project financing from user fees or other dedicated revenue sources). In applying this threshold criterion, the DOT will not consider current or future Federal funds, regardless of source, to be a dedicated revenue source. This interpretation is consistent with congressional intent that the Federal Government position itself as a minority-share investor in the context of this credit program.

Selection Criteria

The Secretary shall consider the following eight criteria in evaluating and selecting among eligible projects to receive credit assistance:

(1) The extent to which the project is nationally or regionally significant, in terms of generating economic benefits, supporting international commerce, or otherwise enhancing the national transportation system;

(2) The creditworthiness of the project, including a determination by the Secretary that any financing for the project has appropriate security features, such as a rate covenant, to ensure repayment;

(3) The extent to which such assistance would foster innovative public-private partnerships and attract private debt or equity investment;

(4) The likelihood that such assistance would enable the project to proceed at an earlier date than the project would otherwise be able to proceed;

(5) The extent to which the project uses new technologies, including Intelligent Transportation Systems (ITS), that enhances the efficiency of the project;

(6) The amount of budget authority required to fund the Federal credit instrument made available;

(7) The extent to which the project helps maintain or protect the environment; and

(8) The extent to which such assistance would reduce the contribution of Federal grant assistance to the project.

With this rulemaking, the DOT requests comments on whether criterion 3 (the extent to which assistance under TIFIA would foster innovative public-private partnerships and attract private debt or equity investment) and criterion 8 (the extent to which assistance under TIFIA would reduce the contribution of Federal grant assistance to the project) should be elaborated. The DOT also requests comments on whether preference should be given to projects based on the total Federal contribution (including both credit and grant assistance from any source) and/or type of transportation project.

Tax Status of Loan Guarantees

The TIFIA did not amend the provisions in section 149(b) of the Internal Revenue Code that prohibit the use of direct or indirect Federal guarantees of tax-exempt obligations. Accordingly, the interest income on any project loan that is directly or indirectly federally guaranteed under TIFIA, shall not be exempt from Federal income taxation.

Rulemaking Analysis and Notices

The 30-day comment period is necessary to help ensure that this new program can be implemented before the credit amount authorized for fiscal year 1999 ($1.6 billion) lapses. Given the need for the DOT to solicit and evaluate applications, make selections, negotiate agreements with project sponsors, and obligate funds before the end of fiscal year 1999, the usual 60-day comment period would be both impracticable and contrary to public interest and congressional intent.

All comments received before the close of business on the comment closing date indicated above will be considered and will be available for examination using the docket number appearing at the top of this document in the docket room at the above address. The DOT will file comments received after the comment closing date in the docket and will consider late comments to the extent practicable. The DOT may, however, issue a final rule at any time after the close of the comment period. In addition to late comments, the DOT will also continue to file, in the docket, relevant information becoming available after the comment closing date. Interested persons should continue to examine the docket for new material.

Executive Order 12866 (Regulatory Planning and Review) and DOT Regulatory Policies and Procedures

The DOT has determined that issuance of a rule is necessary to implement TIFIA, and has concluded that this action represents a ''significant regulatory action'' within the meaning of DOT's Regulatory Policies and Procedures (44 FR 11034, February 26, 1979) and Executive Order 12866. This determination is based on a finding that the rule may have an annual effect on the economy of $100 million or more. The NPRM was reviewed by the Office of Management and Budget under E.O. 12866.

This section summarizes the estimated economic impact of the

proposed rule. This regulation would affect only those entities that voluntarily elected to apply for TIFIA assistance and were selected to receive a Federal credit instrument. It would not impose any direct involuntary costs on non-participants.

The DOT has undertaken a preliminary evaluation of the economic impact of this proposed regulatory action. However, because the number, nature, and size of projects to be assisted will not be known until specific applicants come forward, this analysis is by necessity an estimate. Congress recognized this by including a provision in TIFIA (23 U.S.C. 189) requiring the Secretary to submit a report summarizing the effectiveness of the program within four years of the date of enactment of the legislation (June 9, 2002).

DOT and industry research has indicated that there are substantial economic productivity gains to be derived from capital investment in surface transportation facilities. One study estimates that in the four-decade period from 1950 to 1989, U.S. firms realized annual production cost savings of 18 percent from general highway investment (yearly return of 18 cents per dollar invested in all roads) and 24 percent from investment in non-local roads.[1] In addition to these direct returns, transportation capital investment typically generates significant spillover benefits, which may be of a non-financial nature, such as reduced pollution, increased safety, improved international competitiveness, and enhanced accessibility. Market imperfections often prevent these intangible but nonetheless important public benefits from being monetized and captured.

Just as transportation investment produces benefits, failure to invest results in cost increases. Another recent study estimates that congestion costs the average U.S. citizen $370 annually, in terms of time lost and fuel wasted.[2] These costs are expected to increase as growing investment needs—both in terms of system renewal and capacity expansion—and limited availability of public funding contribute to declining performance.

Growth in both freight movement and passenger travel has grown dramatically in recent years, and is expected to continue growing. For example, since 1980, total ton-miles and intercity passenger miles have grown by 30 percent and 60 percent respectively, according to a recent study by the American Association of State Highway and Transportation Officials. Despite substantial increases in authorized Federal funding levels for surface transportation under the Transportation Equity Act for the 21st Century, current resources are not expected to be able to keep pace with maintenance and preservation needs, let alone the additional demands resulting from growth in population and goods movement. Funding shortfalls can be particularly acute for large infrastructure projects (costing $100 million or more) which, due to their scale, often cannot be readily accommodated in ongoing State and local capital renewal programs.

The economic drag created by under-investment in the nation's transportation network is substantial, as shippers and motorists incur increased vehicle maintenance and fuel costs, shipping delays, safety hazards, and time delays associated with congestion and poorly maintained roads.

The TIFIA was established to provide fractional credit assistance to major transportation infrastructure projects—such as border crossings, trade corridors, and intermodal transfer facilities—that have the potential of generating substantial economic benefits both regionally and nationally. In many cases, such projects are capable of being supported through direct user charges or dedicated revenue streams that can be used to access private capital and other non-Federal funding sources. The TIFIA is designed to fill market gaps through providing supplemental and/or subordinate capital to such projects. It should facilitate their ability to access the capital markets or other financing sources for the majority of their funding needs. Through TIFIA's leverage of limited Federal funds with private capital, these capital-intensive projects can be advanced without displacing smaller, more traditional grant-supported projects. Federal risk exposure should be mitigated by substantial co-investment from non-Federal parties and the use of objective, market-based credit evaluation criteria.

The TIFIA is authorized to receive $530 million of budget authority to support up to $10.6 billion in nominal amounts of credit (or such lesser amounts of credit as can be supported by the budget authority). Under the terms of the legislation, the Federal share is limited to not more than 33 percent of total eligible project costs. In many cases, the actual share of TIFIA assistance may be considerably less. For example, prior to TIFIA, three major surface transportation projects in southern California obtained Federal credit instruments pursuant to special appropriations from Congress. Between 1993 and 1996, the Congress approved a $120 million standby Federal line of credit for the San Joaquin Hills Toll Road; two standby lines of credit totaling $145 million for the Foothill-Eastern Toll Road; and a $400 million direct Federal loan for the Alameda Corridor project. Each of these projects would have met the threshold eligibility criteria under the terms of TIFIA. The Federal credit assistance as a percent of total project costs for these three investments is approximately 8.5 percent, 11.5 percent, and 17.5 percent, respectively.

Under the Federal Credit Reform Act of 1990 (FCRA), the amount of budget authority necessary to support a Federal credit instrument depends upon the subsidy cost (i.e., the estimated present value cost of estimated losses that will be incurred as a result of defaults, net of any fee income). Each project will be assigned a subsidy cost based upon an evaluation of its credit-worthiness.

Since the actual projects under TIFIA have yet to be identified, it is not possible at this stage to ascertain the appropriate subsidy amounts. If, for example, the assumed average subsidy rate under TIFIA were 10 percent, the $530 million of budget authority could support $5.3 billion in nominal amount of Federal credit instruments, and (assuming a 33 percent TIFIA share of project costs) an aggregate of $15.9 billion in capital investment. This would represent a benefit:cost ratio (total capital investment compared to federal budgetary cost) of 30:1. If the subsidy rate averaged 5 percent, the budget authority could support $31.8 billion in aggregate investment; and if the subsidy rate averaged 15 percent, the budget authority could support approximately $10.6 billion in aggregate investment. The only costs imposed on the participants are the repayment of credit at the U.S. Treasury rate (which in certain instances may be significantly less than their own marginal cost of capital), a credit processing charge, and an application charge based upon direct costs incurred by the DOT in processing applications.

On this basis, the DOT has concluded that TIFIA will promote the efficient functioning of project delivery and the private markets, and will generate both direct and indirect benefits, including reduced congestion, greater mobility, improved safety, an enhanced environment, and greater economic growth. These benefits are anticipated to

[1] Contribution of Highway Capital to Industry and National Productivity Growth—Executive Summary, Ishaq Nadirir, New York, FHWA, 1996.

[2] Measuring and Monitoring Urban Mobility, Texas Transportation Institute, November 1996.

far surpass the combined direct costs to the Federal Government ($530 million) and to the entities that elect to participate in the program. Because of the voluntary nature of participation in TIFIA, this regulatory action is not anticipated to impose any costs upon non-participants. The DOT requests comments, information, and data from the public and potential users concerning the economic impact of implementing this rule and the TIFIA program.

Regulatory Flexibility Act

The Regulatory Flexibility Act of 1980 (Pub. L. 96–354, 5 U.S.C. 601–612) requires an assessment of the extent to which proposed rules will have an impact on small business or other small entities. Consistent with the Regulatory Flexibility Act, the DOT has evaluated the effects of this rule on small business or other small entities. The NPRM proposes to implement a Federal Credit assistance program for surface transportation projects. There will be a substantial economic impact on the projects funded. However, the DOT anticipates that few, if any, of the applicants for assistance, will be small entities as defined by the Small Business Administration. For example, applicants are likely to include States and large public, or quasi-public entities. In addition, although it is difficult to judge how many applications will be received, we anticipate that the DOT will offer credit assistance to no more than a handful of projects each year. Based on that evaluation, the DOT hereby certifies that this action would not have significant economic impact on a substantial number of small entities. The DOT invites public comment on this determination.

Unfunded Mandates Reform Act of 1995

The Unfunded Mandates Reform Act of 1995 (Public Law 104–4) requires agencies to prepare a written assessment of the costs, benefits and other effects of proposed or final rules that include a Federal mandate likely to result in the expenditure by State, local or tribal governments, in the aggregate, or by the private sector, of more than $100 million annually. This proposed rule would not impose a Federal mandate resulting in the expenditure by State, local, and tribal governments, in the aggregate, or by the private sector, of $100 million or more in any one year. The rule simply implements a Federal credit assistance program.

Executive Order 12612 (Federalism Assessment)

This action has been analyzed in accordance with the principles and criteria contained in Executive Order 12612. The DOT has determined that this action does not have sufficient federalism implications to warrant the preparation of a federalism assessment. The bases for this determination are that a) eligibility for assistance under this program extends to both private and public entities; and b) the recipients of credit under this voluntary program will receive a benefit, rather than incur costs, through participation. The DOT invites public comment on this determination.

Executive Order 12372 (Intergovernmental Review)

Given that projects receiving assistance under TIFIA may fall under the programmatic jurisdiction of the FHWA, the FRA, or the FTA, the relevant Catalog of Federal Domestic Assistance Program Numbers are: 20.205 highway planning and construction; 20.310 Rail rehabilitation and improvement; and 20.500 transit capital improvement grants. The regulations implementing Executive Order 12372 regarding intergovernmental consultation on Federal programs and activities apply to this program.

Paperwork Reduction Act

This document does not contain information collection requirements for the purposes of the Paperwork Reduction Act of 1995 (44 U.S.C. 3501 *et seq.*); specifically, that fewer than ten respondents, as defined in 5 CFR 1320.3, are anticipated. Based upon preliminary assessments, research reports, meetings with focus groups and discussions with potential respondents, the DOT anticipates approximately six respondents to the application annually. If in the future, the DOT anticipates ten or more respondents annually, immediate steps will be taken to seek approval from OMB for an information collection, as required under the Paperwork Reduction Act.

National Environmental Policy Act

As specified under § 1503 of TIFIA, and codified under § 182(c)(2) of title 23, U.S.C., each project obtaining assistance under this program is required to adhere to the National Environmental Policy Act of 1969, as amended (42 U.S.C. 4321 *et seq.*). This rulemaking simply provides the procedure to apply for credit assistance; therefore, by itself, this rulemaking will not have any effect on the quality of the environment.

Regulation Identification Number

A regulation identification number (RIN) is assigned to each regulatory action listed in the Unified Agenda of Federal Regulations. The Regulatory Information Service Center publishes the Unified Agenda in April and October of each year. The RIN contained in the heading of this document may be used to cross-reference this action with the Unified Agenda. The agency-specific proposed common rule appears at the end of this common preamble.

List of Subjects in 23 CFR Part 180 and 49 CFR Parts 261 and 640

Credit programs—transportation, Highways and roads, Mass transit, Railroads, Investments, Reporting and recordkeeping requirements.

Text of the Common Proposed Rule

The text of the common proposed rule appears below:

PART __—CREDIT ASSISTANCE FOR SURFACE TRANSPORTATION PROJECTS

Sec.

____.1 Purpose.
____.3 Definitions.
____.5 Limitations on assistance.
____.7 Application process.
____.9 Federal requirements.
____.11 Investment-grade ratings.
____.13 Threshold criteria.
____.15 Selection criteria.
____.17 Charges.
____.19 Reporting requirements.

Authority: 23 U.S.C. 180–189 and 315; secs. 1501 *et seq.*, Public Law 105–178, 112 stat. 107, 241, as amended, 49 CFR 1.48.

§ ____.1 Purpose.

This rule implements a Federal credit assistance program for surface transportation projects.

§ ____.3 Definitions.

Eligible project costs means amounts substantially all of which are paid by, or for the account of, an obligor in connection with a project, including the cost of:

(1) Development phase activities, including planning, feasibility analysis, revenue forecasting, environmental review, permitting, preliminary engineering and design work, and other pre-construction activities;

(2) Construction, reconstruction, rehabilitation, replacement, and acquisition of real property (including land related to the project and improvements to land), environmental mitigation, construction contingencies, and acquisition of equipment; and

(3) Capitalized interest necessary to meet market requirements, reasonably

required reserve funds, capital issuance expenses, and other carrying costs during construction.

Federal credit instrument means a secured loan, loan guarantee, or line of credit authorized to be made available under this subchapter with respect to a project.

Investment-grade rating means a rating category of BBB minus, Baa3, or higher assigned by a rating agency to project obligations offered into the capital markets.

Lender means any non-Federal qualified institutional buyer as defined in § 230.144A(a) of title 17, Code of Federal Regulations, known as Rule 144A(a) of the Securities and Exchange Commission and issued under the Securities Act of 1933 (15 U.S.C. 77a *et seq.*), including:

(1) A qualified retirement plan (as defined in § 4974(c) of the Internal Revenue Code of 1986) that is a qualified institutional buyer; and

(2) A governmental plan (as defined in § 414(d) of the Internal Revenue Code of 1986) that is a qualified institutional buyer.

Line of credit means an agreement entered into by the Secretary with an obligor under § 184 of title 23, United States Code, to provide a direct loan at a future date upon the occurrence of certain events.

Loan guarantee means any guarantee or other pledge by the Secretary to pay all or part of the principal of and interest on a loan or other debt obligation issued by an obligor and funded by a lender.

Local servicer means:

(1) A State infrastructure bank established under title 23; or

(2) A State or local government or any agency of a State or local government that is responsible for servicing a Federal credit instrument on behalf of the Secretary.

Obligor means a party primarily liable for payment of the principal of or interest on a Federal credit instrument, which party may be a corporation, partnership, joint venture, trust, or governmental entity, agency, or instrumentality.

Project means:

(1) Any surface transportation project eligible for Federal assistance under title 23 or chapter 53 of title 49, United States Code.

(2) A project for an international bridge or tunnel for which an international entity authorized under Federal or State law is responsible;

(3) A project for intercity passenger bus or rail facilities and vehicles, including facilities and vehicles owned by the National Railroad Passenger Corporation, and components of magnetic levitation transportation systems; and

(4) A project for publicly owned intermodal surface freight transfer facilities, other than seaports and airports, if the facilities are located on or adjacent to National Highway System routes or connections to the National Highway System.

Project obligation means any note, bond, debenture, or other debt obligation issued by an obligor in connection with the financing of a project, other than a Federal credit instrument.

Rating agency means a bond rating agency identified by the Securities and Exchange Commission as a Nationally Recognized Statistical Rating Organization.

Secured loan means a direct loan or other debt obligation issued by an obligor and funded by the Secretary in connection with the financing of a project under § 183 of title 23, United States Code.

State means any one of the fifty states, the District of Columbia, or Puerto Rico.

Subsidy amount means the amount of budget authority sufficient to cover the estimated long-term cost to the Federal Government of a Federal credit instrument, calculated on a net present value basis, excluding administrative costs and any incidental effects on governmental receipts or outlays in accordance with the provisions of the Federal Credit Reform Act of 1990 (2 U.S.C. 661 *et seq.*).

Substantial completion means the opening of a project to vehicular or passenger traffic.

TIFIA means the Transportation Infrastructure Finance and Innovation Act of 1998.

§ ____.5 Limitations on assistance.

(a) The total amount of Federal credit offered to any project receiving credit assistance under this part shall not exceed 33 percent of the anticipated eligible project costs.

(b) Costs incurred prior to a project sponsor's submission of an application for credit assistance may be considered in calculating eligible project costs only upon approval of the Secretary. In addition, applicants shall not include application charges or any other expenses associated with the application process (such as charges associated with obtaining the required preliminary rating opinion letter) among the eligible project costs.

(c) No costs financed internally or with interim funding may be refinanced under this part later than a year following substantial completion of the project.

(d) Within the overall credit assistance limitation of 33 percent of eligible project costs, the DOT may consider making multi-year contingent commitments of budget authority and associated credit assistance for especially large projects with extended construction periods and financing needs. In this instance, any reservation of future-year funding shall be made through a letter of intent and shall be contingent on the project's demonstrating satisfactory progress to the DOT. Depending on the overall demand for credit assistance under this part, the DOT may limit such contingent commitments to 50 percent of the budget authority becoming available in the applicable future years. If such a multi-year commitment is made, each year's loan will be tied to distinct, clearly identified project segments or stages.

§ ____.7 Application process.

(a) Public and private applicants for credit assistance under this part will be required to submit applications to the DOT in order to be considered for approval by the Secretary of Transportation.

(b) At a minimum, such applications shall provide:

(1) Documentation sufficient to demonstrate that the project satisfies each of the threshold criteria in § ____.13 and describe the extent to which the project satisfies each of the selection criteria in § ____.15.

(2) Background information on the project for which assistance is sought, such as the project's description, status of the environmental permitting process, and construction schedule;

(3) Background information on the applicant and/or project sponsor;

(4) Historical information, if applicable, concerning the applicant's financial condition, including, for example, independently audited financial statements and certifications concerning bankruptcies or delinquencies on other debt; and

(5) Current financial information concerning both the project and the applicant, such as sources and uses of funds for the project and a forecast of cash flows available to service all debt instruments.

(c) An application for a project located in or sponsored by more than one State or other entity shall be submitted to the DOT by just one State or entity. The sponsoring States or entities shall designate a single obligor for purposes of applying for, receiving, and repaying TIFIA credit assistance.

(d) Each fiscal year for which Federal assistance is available under this part, the DOT will publish a **Federal Register** notice to solicit applications for credit assistance. Such notice will specify the relevant due dates, the estimated amount of funding available to support TIFIA credit instruments for the current and future fiscal years, contact name(s), and other details for that year's application submissions and funding approvals. The DOT will also maintain a centralized mailing list for sending notices to prospective applicants.

§ ____.9 Federal requirements.

All projects receiving credit assistance under this part shall comply with:

(a) the relevant requirements of title 23 of the United States Code for highway projects, chapter 53 of title 49, United States Code, for transit projects, and § 5333(a) of title 49, United States Code, for rail projects, as appropriate;

(b) Title VI of the Civil Rights Act of 1964 (42 U.S.C. 2000d *et seq.*);

(c) the National Environmental Policy Act of 1969 (42 U.S.C. 4321 *et seq.*);

(d) the Uniform Relocation Assistance and Real Property Acquisition Policies Act of 1970 (42 U.S.C. 4601 *et seq.*); and

(e) other Federal and compliance requirements as may be applicable.

§ ____.11 Investment-grade ratings.

(a) The full funding of a secured (direct) loan, loan guarantee, or line of credit shall be contingent on the assignment of an investment-grade rating by a recognized bond rating agency to all project obligations that have a lien senior to that of the Federal credit instrument on the pledged security.

(b) An investment-grade rating must be received before the DOT will disburse any funds.

§ ____.13 Threshold criteria.

(a) To be eligible to receive Federal credit assistance under this part, a project shall meet the following five threshold criteria:

(1) The project shall be included in a State transportation plan and, at such time as the DOT and project sponsor initially execute a credit agreement, in an approved State Transportation Improvement Program.

(2) The State, local servicer, or other entity undertaking the project shall submit a project application to the Secretary of Transportation;

(3) A project shall have eligible project costs that are reasonably anticipated to equal or exceed the lesser of $100 million or 50 percent of the amount of Federal-aid highway funds apportioned for the most recently completed fiscal year to the State in which the project is located (in the case of a project principally involving the installation of Intelligent Transportation Systems (ITS), eligible project costs shall be reasonably anticipated to equal or exceed $30 million);

(4) Project financing shall be repayable, in whole or in part, from tolls, user fees or other dedicated revenue sources; and

(5) In the case of a project that is undertaken by an entity that is not a State or local government or an agency or instrumentality of a State or local government, the project that the entity is undertaking shall be included in the State transportation plan and an approved State Transportation Improvement Program as provided in paragraph (a)(1) of this section.

(b) With respect to paragraph (a)(3), for a project located in more than one State, the minimum cost threshold size shall be the lesser of $100 million or 50 percent of the amount of Federal-aid highway funds apportioned for the most recently completed fiscal year to the participating State that receives the least amount of such funds.

(c) With respect to paragraph (a)(4), the DOT will not consider current or future Federal funds, regardless of source, to be a dedicated revenue source.

§ ____.15 Selection criteria.

(a) The Secretary shall consider the following eight criteria in evaluating and selecting among eligible projects to receive credit assistance:

(1) The extent to which the project is nationally or regionally significant, in terms of generating economic benefits, supporting international commerce, or otherwise enhancing the national transportation system;

(2) The creditworthiness of the project, including a determination by the Secretary that any financing for the project has appropriate security features, such as a rate covenant, to ensure repayment;

(3) The extent to which such assistance would foster innovative public-private partnerships and attract private debt or equity investment;

(4) The likelihood that such assistance would enable the project to proceed at an earlier date than the project would otherwise be able to proceed;

(5) The extent to which the project uses new technologies, including Intelligent Transportation Systems (ITS), that enhances the efficiency of the project;

(6) The amount of budget authority required to fund the Federal credit instrument made available;

(7) The extent to which the project helps maintain or protect the environment;

(8) The extent to which such assistance would reduce the contribution of Federal grant assistance to the project.

(b) In addition, section 182(b)(2)(B) of title 23, United States Code, conditions a project's approval for credit assistance on receipt of a preliminary rating opinion letter indicating that the project's senior obligations have the potential to attain an investment-grade rating.

(c) The DOT shall evaluate each project's distinct public benefits (including personal and freight mobility, economic development, and impact on international competitiveness) and contribution to program goals (including leverage of the Federal contribution and increased private investment in surface transportation infrastructure).

(d) The DOT may give preference to those projects for which the total Federal contribution (including both credit and grant assistance from any Federal source) requested is small. This preference supports the policy goal of the DOT to position itself as a minority-share investor in any project receiving credit assistance under TIFIA to induce significant private co-investment.

(e) The DOT may also give preference to applications for loan guarantees rather than other forms of Federal credit assistance. This preference is consistent with Federal policy that, when Federal credit assistance is necessary to meet a Federal objective, loan guarantees should be favored over direct loans, unless attaining the Federal objective requires a subsidy, as defined by the Federal Credit Reform Act of 1990, deeper than can be provided by a loan guarantee.

§ ____.17 Charges.

(a) The DOT will require a non-refundable application initiation charge for each project applying for credit assistance under TIFIA. The DOT may also require an additional credit processing charge for projects selected to receive assistance. The proceeds of any such charges will cover a portion of the costs to the Federal Government of soliciting and evaluating applications, selecting projects to receive assistance, and negotiating credit agreements. For fiscal year 1999, the DOT will require an application initiation charge of $5,000 for each project applying for credit assistance under TIFIA. The DOT will not require any credit processing charges for fiscal year 1999. For fiscal years 2000 and beyond, the DOT may

adjust the amount of the application initiation charge, and will determine the appropriate amount of the credit processing charge, based on early program implementation experience in fiscal year 1999.

(b) Applicants shall not include application charges or any other expenses associated with the application process (such as charges associated with obtaining the required preliminary rating opinion letter) in the total project cost for the purposes of calculating the 33 percent credit limitation referenced in § ____.5(a).

(c) If, in any given year, there is insufficient budget authority to fund the credit instrument for a qualified project that has been selected to receive assistance under TIFIA, the Secretary may increase the application initiation charge or the credit processing charge on the approved applicant to reduce the subsidy cost of that project. No such fees or charges may be included among eligible project costs for the purpose of calculating the maximum 33 percent credit amount of TIFIA assistance under § ____.5.

§ ____.19 Reporting requirements.

At a minimum, any recipient of Federal credit under this part shall submit an annual project performance report and audited financial statements to the DOT within 120 days following the recipient's fiscal year-end for each year during which the recipient's obligation to the Federal Government remains in effect. The DOT may conduct periodic financial and compliance audits of the recipient of credit assistance, as determined necessary by the DOT. The specific credit agreement between the recipient of credit assistance and the DOT may contain additional reporting requirements.

1. The Federal Highway Administration proposes to add part 180 to 23 CFR Chapter I as set forth at the end of the common preamble.

2. The Federal Railroad Administration proposes to add part 261 to 49 CFR Chapter II as set forth at the end of the common preamble.

3. The Federal Transit Administration proposes to add part 640 to 49 CFR Chapter VI as set forth at the end of the common preamble.

Appendix ____—Application Checklist

Note: This appendix will not appear in the Code of Federal Regulations.

The DOT is in the process of developing a standard application form for credit assistance for surface transportation projects. This appendix specifies the documentary materials that the DOT is considering for inclusion in the standard application form. The following list of information items derives, in part, from the DOT's research concerning State and Federal credit assistance programs, as well as internal DOT guidance. The following list of items potentially to be included in a standard application form is being provided for public comment.

a. Summary of how the proposed project satisfies each of the threshold criteria in § ____.13 and the extent to which it satisfies each of the selection criteria in § ____.15 of this part. (Each criterion should be addressed separately by the applicant).

b. Project information.

1. Detailed description of the project, including type of project, geographic location, economic impact, public benefits, and purpose or purposes.

2. Documentation sufficient to demonstrate the project's current inclusion in the long-range State transportation plan and anticipated inclusion in the State Transportation Improvement Program (STIP).

3. Copies of permits and approvals required by local, regional, State, and Federal agencies, including environmental and other permits and approvals, and other documentation sufficient to demonstrate compliance with other statutory and regulatory requirements.

4. Documentation specifying the project's status with regard to conformance with the National Environmental Policy Act of 1969 (NEPA).

5. Description of project construction phases and timeline.

6. Description of the current condition of all facilities relating to the project.

7. Description of the maintenance and operation plan for the project.

c. Applicant information.

1. Legal applicant's name, headquarters address, mailing address, phone and fax numbers.

2. Primary contact person's name, title, address, phone and fax numbers.

3. Full description of type of sponsoring entity (general partnership, limited partnership, corporation, other), the parties forming the entity, and the date on which the entity was established.

4. Applicant's tax identification number.

5. Name of the entity that will exercise ownership control of project.

6. Names of the entities charged with planning, developing, and operating the project.

7. Names of various other parties involved in the project with description of responsibilities and evidence of agreements or commitments.

8. Disclosure of current or past litigation involving the parties that will own, plan, develop and/or operate the project.

d. Historical financial information relating to the applicant.

1. Signed, audited financial statements.

2. Credit references or release forms.

3. Federal income tax returns.

4. Certification and/or resolution of any delinquency or default on Federal debt.

5. Bankruptcy history.

e. Initial financial plan for the project.

1. Initial total cost estimate.

i. Costs of feasibility studies.

ii. Costs of preliminary engineering.

iii. Costs of environmental assessment.

iv. Costs of right of way.

v. Costs of construction.

vi. Costs of construction engineering/inspection.

vii. Costs of project management.

viii. Costs relating to financing.

ix. Proposed cost containment strategies (e.g., design-build, use of cost control teams, management cost control strategies, and value engineering).

2. Implementation plan for the project.

i. Schedule, presented in annual increments, for completing and operating the project based on initial base year costs adjusted for inflation and any cost escalation.

ii. Methodology for all cost assumptions.

iii. Sources of potential future cost estimates (e.g., environmental costs, litigation costs, overtime costs, and value engineering savings).

3. Funding sources: all proposed sources and uses of project funds presented as annual amounts.

i. Supporting documentation to verify the availability of all sources of public and private funding.

ii. Comparison of annual amounts available for project obligations versus annual obligation needs.

4. Cash flows: Long-term pro-forma cash flow projection clearly delineating all cash flows by category (revenues and expenses) and subcategory (e.g., operations and maintenance, debt service to senior bondholders, debt service to the Federal Government, reserves) and specifying coverage ratios for each year.

5. Type of Federal credit assistance that the applicant is requesting and proposed terms (e.g., amount, maturity, allowances for prepayment and deferral).

6. Proposed timing and use of disbursements of requested Federal credit assistance.

7. Proposed collateral/security for Federal credit assistance.

8. Copy of preliminary rating opinion letter on senior debt obligations from at least one nationally recognized rating agency.

9. Copy of narrative financial analysis and/or feasibility study, including documentation to support revenue projections, such as traffic studies and regional economic projections, as applicable.

10. For loan guarantees, additional documentation including copies of the obligation agreement between the proposed guaranteed lender and borrower, background information on the proposed guaranteed lender, and other data specifically pertaining to a loan guarantee.

f. Any other information which the DOT may deem necessary for project evaluation and selection.

Issued in Washington, DC on January 28, 1999.

Kenneth R. Wykle,

Federal Highway Administration Administrator.

Jolene M. Molitoris,

Federal Railroad Administration Administrator.

Gordon J. Linton,

Federal Transit Administration Administrator.

[FR Doc. 99–2637 Filed 2–5–99; 8:45 am]

BILLING CODE 4910–22–P

DEPARTMENT OF THE INTERIOR

Office of Surface Mining Reclamation and Enforcement

30 CFR Part 935

[OH–244–FOR]

Ohio Regulatory Program

AGENCY: Office of Surface Mining Reclamation and Enforcement (OSM), Interior.

ACTION: Proposed rule; public comment period and opportunity for public hearing.

SUMMARY: OSM is announcing receipt of a proposed amendment to the Ohio regulatory program (Ohio program) under the Surface Mining Control and Reclamation Act of 1977 (SMCRA). Ohio is proposing revisions to section 1513–3–21 of the Ohio Administrative Code (OAC) as it relates to awards of costs and expenses, including attorney's fees, arising in connection with appeals heard by the Reclamation Commission. The amendment is intended to revise the Ohio program to be consistent with its statute at Ohio Revised Code (ORC) § 1513.13(E) as well as the corresponding Federal regulations.

DATES: If you submit written comments, they must be received by 4:00 p.m., [E.D.T.] March 10, 1999. If requested, a public hearing on the proposed amendment will be held on March 5, 1999. Requests to speak at the hearing must be received by 4:00 p.m., on February 23, 1999.

ADDRESSES: Mail or hand-deliver your written comments and requests to speak at the hearing to George Rieger, Field Branch Chief, at the address listed below.

You may review copies of the Ohio program, the proposed amendment, a listing of any scheduled public hearings, and all written comments received in response to this document at the addresses listed below during normal business hours, Monday through Friday, excluding holidays. You may receive one free copy of the proposed amendment by contacting OSM's Appalachian Regional Coordinating Center.

George Rieger, Field Branch Chief, Appalachian Regional Coordinating Center, Office of Surface Mining Reclamation and Enforcement, 3 Parkway Center, Pittsburgh PA 15220, Telephone: (412) 937–2153.

Ohio Division of Mines and Reclamation, 1855 Fountain Square Court, Columbus, Ohio 43244, Telephone: (614) 265–1076.

FOR FURTHER INFORMATION CONTACT: George Rieger, Field Branch Chief, Appalachian Regional Coordinating Center, Telephone: (412) 937–2153. Internet: grieger@osmre.gov.

SUPPLEMENTARY INFORMATION:

I. Background on the Ohio Program

On August 16, 1982, the Secretary of the Interior conditionally approved the Ohio program. You can find background information on the Ohio program, including the Secretary's findings, the disposition of comments, and the conditions of approval in the August 10, 1982, **Federal Register** (47 FR 34688). You can find later actions on conditions of approval and program amendments at 30 CFR 935.11, 935.15, and 935.16.

II. Description of the Proposed Amendment

By letter dated January 21, 1999 (Administrative Record No.OH–2177–00) Ohio submitted proposed amendments to its program concerning award of costs and fees in connection with appeals heard by the Reclamation Commission. Ohio submitted the proposed amendments at its own initiative. The changes proposed by Ohio in the amendment are discussed briefly below:

OAC 1513–3–21 Award of costs and expenses.

(a) Paragraphs (A) and (B) are amended by changing the reference from the ''board of review'' to the ''Reclamation Commission'' and specifically requiring that a petition for costs and expenses including attorney's fees be submitted in accordance with Section 1513.13(E) and (E)(1)(c) of the ORC.

(b) New paragraph (C) is added to specify that a decision by the Chief of the Division of Mines and Reclamation granting or denying in whole or in part a request for an award of costs and expenses including attorney's fees made under Section 1513.13(E)(1)(a) or 1513.13(E)(1)(b) of the ORC shall be appealable to the commission under Section 1513.13(A) of the ORC.

(c) Existing Paragraph (C) pertaining to the contents of a petition is re-numbered as (D) and further amended by including the specific references to the ORC included in (a) and (b) above.

(d) Existing Paragraphs (D),(E) and (F) are re-numbered as (E), (F), and (G) and are further amended by changing the references from the board to the Reclamation Commission.

III. Public Comment Procedures

According to the provisions of 30 CFR 732.17(h), we are seeking comments on whether the proposed amendment satisfies the applicable program approval criteria of 30 CFR 732.15. If we determine the amendment to be adequate, it will become part of the Ohio program.

Written Comments

Your written comments should be specific, pertain only to the issues proposed in this rulemaking, and include explanations in support of your recommendations. Comments received after the time indicated under ''DATES'' or at locations other than the Appalachian Regional Coordinating Center will not necessarily be considered in the final rulemaking or included in the Administrative Record.

Public Hearing

If you wish to speak at the public hearing, you should contact the person listed under **FOR FURTHER INFORMATION CONTACT** by 4:00 p.m., [E.D.T.] on February 23, 1999. The location and time of the hearing will be arranged with those persons requesting the hearing. If no one requests an opportunity to speak at the public hearing, the hearing will not be held.

Filing a written statement at the time of the hearing is requested as it will greatly assist the transcriber. Submission of written statements in advance of the hearing will also allow us to prepare adequate responses and appropriate questions.

The public hearing will continue on the specified date until all persons scheduled to speak have been heard. Persons in the audience who have not been scheduled to speak, and who wish to do so, will be heard following those who have been scheduled. The hearing will end after all persons scheduled to speak and persons present in the audience who wish to speak have been heard.

Any disabled individual who has need for a special accommodation to attend a public hearing should contact the individual listed under **FOR FURTHER INFORMATION CONTACT**.

Public Meeting

If only one person requests an opportunity to speak at a hearing, a public meeting, rather than a public hearing, may be held. Persons wishing to meet with OSM representatives to discuss the proposed amendment may request a meeting by contacting the person listed under **FOR FURTHER INFORMATION CONTACT**. All such meetings will be open to the public and, if possible, notices of meetings will be posted at the locations listed under **ADDRESSES**. A written summary of each meeting will be made a part of the Administrative Record.

IV. Procedural Determinations

Executive Order 12866

This rule is exempted from review by the Office of Management and Budget (OMB) under Executive Order 12866 (Regulatory Planning and Review).

Executive Order 12988

The Department of the Interior has conducted the reviews required by section 3 of Executive Order 12988 (Civil Justice Reform) and has determined that, to the extent allowed by law, this rule meets the applicable standards of subsections (a) and (b) of that section. However, these standards are not applicable to the actual language of State regulatory programs and program amendments since each such program is drafted and promulgated by a specific State, not by OSM. Under sections 503 and 505 of SMCRA (30 U.S.C. 1253 and 1255) and 30 CFR 730.11, 732.15, and 732.17(h)(10), decisions on proposed State regulatory programs and program amendments submitted by the States must be based solely on a determination of whether the submittal is consistent with SMCRA and its implementing Federal regulations and whether the other requirements of 30 CFR Parts 730, 731, and 732 have been met.

National Environmental Policy Act

No environmental impact statement is required for this rule since section 702(d) of SMCRA (30 U.S.C. 1292(d)) provides that agency decisions on proposed State regulatory program provisions do not constitute major Federal actions within the meaning of section 102(2)(C) of the National Environmental Policy Act (42 U.S.C. 4332(2)(C)).

Paperwork Reduction Act

This rule does not contain information collection requirements that require approval by OMB under the Paperwork Reduction Act (44 U.S.C. 3507 *et seq.*).

Regulatory Flexibility Act

The Department of the Interior has determined that this rule will not have a significant economic impact on a substantial number of small entities under the Regulatory Flexibility Act (5 U.S.C. 601 *et seq.*). The State submittal which is the subject of this rule is based upon counterpart Federal regulations for which an economic analysis was prepared and certification made that such regulations would not have a significant economic effect upon a substantial number of small entities. Accordingly, this rule will ensure that existing requirements previously promulgated by OSM will be implemented by the State. In making the determination as to whether this rule would have a significant economic impact, the Department relied upon the data and assumptions for the counterpart Federal regulations.

Unfunded Mandates

In accordance with the Unfunded Mandates Reform Act (2 U.S.C. 1501 *et seq.*), this rule will not produce a Federal mandate of $100 million or greater in any year, i.e., it is not a ''significant regulatory action'' under the Unfunded Mandates Reform Act.

List of Subjects in 30 CFR 935

Intergovernmental relations, Surface mining, Underground mining.

Dated: January 29, 1999.

Allen D. Klein,

Regional Director, Appalachian Regional Coordinating Center.

[FR Doc. 99–2899 Filed 2–5–99; 8:45 am]

BILLING CODE 4310–05–P

DEPARTMENT OF TRANSPORTATION

Coast Guard

33 CFR Part 165

[CGD 05–98–043]

RIN 2115–AA97

Safety Zone; Atlantic Ocean, Vicinity of Cape Henlopen State Park, DE

AGENCY: Coast Guard, DOT.

ACTION: Notice of proposed rulemaking.

SUMMARY: The Delaware Aerospace Education Foundation plans to launch a Super Loki Meteorological Rocket from Cape Henlopen State Park on the second Saturday of May each year. The Coast Guard proposes to establish a Safety Zone in the Atlantic Ocean near Cape Henlopen State Park, Delaware to protect spectators and vessels from the potential hazards associated with this launch.

DATES: Comments must be received on or before March 25, 1999.

ADDRESSES: Comments may be mailed to Commanding Officer, USCG MSO/Group Office, 1 Washington Avenue, Philadelphia, Pennsylvania 19147–4395, Attention: Chief Petty Officer Ward, or hand-delivered to the same address between 8 a.m. and 5 p.m., Monday through Friday, except Federal holidays. The telephone number is (215) 271–4888. Comments will become part of this docket and will be available for inspection and copying at the above address.

FOR FURTHER INFORMATION CONTACT: Lieutenant (Junior Grade) Fallacy or Chief Petty Officer Ward, Project Managers, Waterways and Waterfront Facilities Branch, at (215) 271–4888.

SUPPLEMENTARY INFORMATION:

Request for Comments

The Coast Guard encourages interested persons to participate in this rulemaking by submitting written views, data, or arguments. Persons submitting comments should include their names and addresses, identify this rulemaking (CGD 05–98–043) and the specific section of this proposal to which each comment applies, and give the reason for each comment. Please submit two copies of all comments and attachments in an unbound format, no larger than 8½ by 11 inches, suitable for copying and electronic filing. Persons wanting acknowledgment of receipt of comments should enclose stamped, self-addressed postcards or envelopes.

The Coast Guard will consider all comments received during the comment period. It may change this proposal in view of the comments. The Coast Guard plans no public hearing. Persons may request a public hearing by writing to the address listed under **ADDRESSES**. The request should include the reasons why a hearing would be beneficial. If it determines that the opportunity for oral presentations will aid this rulemaking, the Coast Guard will hold a public hearing at a time and place announced by a later notice in the **Federal Register**.

Background and Purpose

The Delaware Aerospace Education Foundation plans to launch a Super Loki Meteorological Rocket from Cape Henlopen State Park each year on the second Saturday in May for the purpose of collecting meteorological data. If the Saturday launch is canceled due to inclement weather, it will be scheduled

for the next day. The rocket motor is expected to splash down within 2 nautical miles of the launch point. This proposed safety zone is necessary to protect spectators and transiting vessels from the potential hazards associated with the launch and the subsequent splashdown of the rocket motor.

Although the exact launch time is subject to change due to weather, the entire launch/splashdown process is expected to occur between 2 p.m. and 4:30 p.m. The Coast Guard will announce via Broadcast Notice to Mariners the anticipated day (either Saturday or Sunday) and time of the launch and will grant general permission to enter the safety zone during those times in which the launch and spent rocket motor do not pose a hazard to mariners. Because the hazardous condition is expected to last for only 2½ hours of one day, and because general permission to enter the safety zone will be given during non-hazardous times, the impact of this rule on commercial and recreational traffic is expected to be minimal.

The rocket payload, assisted by parachute, is expected to splash down in the Atlantic Ocean approximately 22 nautical miles southeast of the launch point, which is an area outside of the proposed safety zone. The Coast Guard advises all marine traffic to exercise caution when transiting that area during launch times.

Discussion of Proposed Rule

The proposed safety zone would include an 8 square mile section of the Atlantic Ocean adjacent to the launch site at Cape Henlopen State Park in Delaware. Specifically, the proposed safety zone would include the waters of the Atlantic Ocean that are within the area bounded by a line drawn north from the tip of Cape Henlopen located latitude 38°48.2′ North, longitude 75°05.5′ West, to a point located at latitude 38°49.4′ North, longitude 75°05.5′ West; then east to a point located at latitude 38°49.4′ North, longitude 75°01.4′ West; then south to a point located at latitude 38°43.0′ North, longitude 75°01.4′ West; then west to a point on the shoreline located at latitude 38°43.0′ North, longitude 75°04.5′ West.

The proposed safety zone is necessary to protect spectators and transiting vessels from the potential hazards associated with the launch of the Super Loki Meteorological Rocket and the subsequent spashdown of the rocket motor. The safety zone would be in effect on the second Saturday in May and the following day. Vessels would be prohibited from transiting through the safety zone without first obtaining permission from the Captain of the Port of Philadelphia. The Captain of the Port would announce via Broadcast Notice to Mariners the anticipated day and time of the launch and grant general permission to enter the safety zone during all non-hazardous times.

Regulatory Evaluation

This proposal is not a significant regulatory action under section 3(f) of Executive Order 12866 and does not require an assessment of potential costs and benefits under section 6(a)(3) of that order. It has been exempted from review by the Office of Management and Budget under that order. It is not significant under the regulatory policies and procedures of the Department of Transportation (DOT) (44 FR 11040; February 26, 1979). The regulated area would be limited to 8 square miles and permission to enter the area would be denied only during the 2½ hours in which the rocket launch poses a hazard. Therefore, the Coast Guard expects the economic impact of this proposal to be so minimal that a full Regulatory Evaluation under paragraph 10e is unnecessary.

Small Entities

Under the Regulatory Flexibility Act (5 U.S.C. 601–612), the Coast Guard must consider whether this proposal will have a significant economic impact on a substantial number of small entities. ''Small Entities'' include independently owned and operated small businesses that are not dominant in their field and that otherwise qualify as ''small business concerns'' under section 3 of the Small Business Act (15 U.S.C. 632). The proposed regulated area would be limited to 8 square miles and permission to enter it would be withheld for about 2½ hours each year. Because it expects the impact of this proposal to be minimal, the Coast Guard certifies under 5 U.S.C. 605(b), that this proposal, if adopted, will not have a significant economic impact on a substantial number of small entities.

Collection of Information

This proposal contains no Collection of Information requirements under the Paperwork Reduction Act (44 U.S.C. 3501–3520).

Federalism

The Coast Guard has analyzed this proposal under the principles and criteria contained in Executive Order 12612 and has determined that this proposal does not have sufficient federalism implications to warrant the preparation of a Federalism Assessment.

Environment

The Coast Guard considered the environmental impact of this proposal and concluded that, under figure 2–1, paragraph (34)(g), of COMDTINST M16475.1C, this proposal is categorically excluded from further environmental documentation. A Categorical Exclusion Determination statement has been prepared and placed in the rulemaking docket.

List of Subjects in 33 CFR Part 165

Harbors, Marine Safety, Navigation (water), Reporting and recordkeeping requirements, Security measures, Waterways.

For the reasons set out in the preamble, the Coast Guard proposes to amend 33 CFR Part 165 as follows:

PART 165—[AMENDED]

1. The authority citation for Part 165 continues to read as follows:

Authority: 33 U.S.C. 1231; 50 U.S.C. 191; 33 CFR 1.05–1(g), 6.04–1, 6.04–6, and 160.5; 49 CFR 1.46.

2. A new Section 165.535 is added to read as follows:

§ 165.535 Safety Zone: Atlantic Ocean, Vicinity of Cape Henlopen State Park, Delaware.

(a) *Location.* The following area is a safety zone: All waters of the Atlantic Ocean that are within the area bounded by a line drawn north from the tip of Cape Henlopen located at latitude 38°48.2′ North, longitude 75°05.5′ West, to a point located at latitude 38°49.4′ North, longitude 75°05.5′, West; thence east to a point located at latitude 38°49.4′ North, longitude 75°01.4′ West; thence south to a point located at latitude 38°43.0′ North, longitude 75°01.4′ West; thence west to a point on the shoreline located at latitude 38°43.0′ North, longitude 75°04.5′ West. All coordinates reference Datum: NAD 1983.

(b) *Regulation.* The general regulations governing safety zones contained in § 165.23 apply. Vessels may not enter the safety zone without first obtaining permission from the Captain of the Port (COTP) Philadelphia.

(c) *Effective Dates.* This rule is effective annually on the second Saturday in May and the following day.

(d) *General Information.*

(1) Those times during which hazardous conditions exist inside the safety zone will be announced via Broadcast Notice to Mariners. General permission to enter the safety zone will be broadcast during non-hazardous times.

(2) The COTP Philadelphia and the Duty Officer at the Marine Safety Office, Philadelphia, Pennsylvania, can be contacted at telephone number (215) 271–4940 and on VHF channels 13 and 16.

(3) The COTP Philadelphia may authorize and designate any Coast Guard commissioned, warrant, or petty officer to act on his behalf in enforcing this safety zone.

Dated: January 25, 1999.

T.E. Bernard,

Captain, U.S. Coast Guard, Acting Commander, Fifth Coast Guard District.

[FR Doc. 99–2973 Filed 2–5–99; 8:45 am]

BILLING CODE 4910–15–M

ENVIRONMENTAL PROTECTION AGENCY

40 CFR Part 52

[MN55–01–7280b; MN56–01–7281b; MN57–01–7282b; FRL–6230–4]

Approval and Promulgation of State Implementation Plans; Minnesota

AGENCY: Environmental Protection Agency (EPA).

ACTION: Proposed rule.

SUMMARY: In this document, the EPA is proposing to approve revisions to Minnesota's State Implementation Plan (SIP) for particulate matter and sulfur dioxide in the Minneapolis-St. Paul area. This revision amends State Administrative Orders for North Star Steel Company, LaFarge Corporation, and GAF Building Materials.

In the final rules section of this **Federal Register**, EPA is approving the State's request as a direct final rule without prior proposal because EPA views this action as noncontroversial and anticipates no adverse comments. A detailed rationale for approving the State's request is set forth in the direct final rule. The direct final rule will become effective without further notice unless the Agency receives relevant adverse written comment on this action within 30 days of this publication. Should the Agency receive such comment, it will publish a document informing the public that the direct final rule will not take effect and such public comment received will be addressed in a subsequent final rule based on this proposed rule. If no adverse comments are received, the direct final rule will take effect on the date stated in that document and no further activity will be taken on this proposed rule. EPA does not plan to institute a second comment period on this action. Any parties interested in commenting on this action should do so at this time.

DATES: Written comments must be received on or before March 10, 1999.

ADDRESSES: Written comments should be sent to: Carlton T. Nash, Chief, Regulation Development Section, Air Programs Branch (AR–18J), U.S. Environmental Protection Agency, 77 West Jackson Boulevard, Chicago, Illinois 60604.

FOR FURTHER INFORMATION CONTACT: Christos Panos at (312) 353–8328.

SUPPLEMENTARY INFORMATION: For additional information see the direct final rule published in the rules section of this **Federal Register**. Copies of the documents relevant to this action are available for public inspection during normal business hours at the above address. (Please telephone Christos Panos at (312) 353–8328 before visiting the Region 5 Office.)

List of Subjects in 40 CFR Part 52

Environmental protection, Air pollution control, Intergovernmental relations, Particulate matter, Sulfur dioxide.

Dated: January 19, 1999.

JoLynn Traub,

Acting Regional Administrator, Region 5.

[FR Doc. 99–2786 Filed 2–5–99; 8:45 am]

BILLING CODE 6560–50–P

ENVIRONMENTAL PROTECTION AGENCY

40 CFR Part 83

[FRL–6230–7]

RIN 2060–AI11

Control of Emissions From New Nonroad Spark-Ignition Engines Rated Above 19 Kilowatts and New Land-Based Recreational Spark-Ignition Engines

AGENCY: Environmental Protection Agency (EPA).

ACTION: Notice of Proposed Finding.

SUMMARY: EPA proposes a finding that nonroad spark-ignition engines rated above 19 kilowatts, as well as all land-based recreational nonroad spark-ignition engines, cause or contribute to air quality nonattainment in more than one ozone or carbon monoxide nonattainment area. EPA also proposes a finding that particulate matter emissions from these engines cause or contribute to air pollution that may reasonably be anticipated to endanger public health or welfare. This proposal does not address marine propulsion engines.

DATES: EPA requests comment on this proposal no later than April 12, 1999. EPA will hold a public hearing on this proposed finding on March 11, 1999 if one is requested on or before February 23, 1999.

ADDRESSES: Materials related to this action are contained in Public Docket A–98–01, located at room M–1500, Waterside Mall (ground floor), U.S. Environmental Protection Agency, 401 M Street, S.W., Washington, DC 20460. Anyone may inspect the docket from 8:00 a.m. until 5:30 p.m., Monday through Friday. EPA may charge a reasonable fee for copying docket materials.

Send comments on this notice to Public Docket A–98–01 at the above address. EPA requests that you also send a copy of any comments to Alan Stout, U.S. EPA, 2000 Traverwood Drive, Ann Arbor, MI 48105.

FOR FURTHER INFORMATION CONTACT: Alan Stout (734) 214–4805.

SUPPLEMENTARY INFORMATION: EPA has established emission standards for several nonroad engine categories. The categories of nonroad engines for which standards currently exist cover a variety of applications, including farm and construction equipment, marine vessels, locomotives, and lawn and garden equipment. Lawn and garden equipment uses nonroad spark-ignition engines, but these engines are generally rated below 19 kW. Emission standards targeting lawn and garden engines therefore apply only to engines rated at or below 19 kW.

In contrast, nonroad spark-ignition engines rated above 19 kW (25 hp) and all spark-ignition engines used in land-based recreational applications are not currently subject to federal emission standards.[1] With this document, EPA is beginning the process leading to eventual emission standards for these engines.

I. Statutory Authority

Section 213(a)(1) of the Clean Air Act, 42 U.S.C. 7547(a), requires that the Agency study the emissions from all categories of nonroad engines and equipment (other than locomotives) to determine, among other things, whether these emissions ''cause or significantly contribute to air pollution which may reasonably be anticipated to endanger public health and welfare.'' Section 213(a)(2) further requires EPA to determine, through notice and comment, whether the emissions of

[1] For the purposes of this document, all references to spark-ignition engines rated above 19 kW includes marine auxiliary engines, but excludes marine propulsion engines.

carbon monoxide (CO), volatile organic compounds (VOCs), and oxides of nitrogen (NO_X) found in the above study significantly contributes to ozone or CO concentrations in more than one ozone or CO nonattainment area. With such a determination of significance, section 213(a)(3) requires the Agency to establish emission standards applicable to CO, VOC, and NO_X emissions from classes or categories of new nonroad engines and vehicles that cause or contribute to such air pollution. Moreover, if EPA determines that any other emissions from new nonroad engines contribute significantly to air pollution, EPA may promulgate emission standards under section 213(a)(4) regulating emissions from classes or categories of new nonroad engines that EPA finds contribute to such air pollution.

As directed by the Clean Air Act, EPA conducted a study of emissions from nonroad engines, vehicles, and equipment in 1991.[2] Based on the results of that study, referred to as NEVES, EPA determined that emissions of NO_X, HC, and CO from nonroad engines and equipment contribute significantly to ozone and CO concentrations in more than one nonattainment area (see 59 FR 31306, June 17, 1994).[3] Given this determination, section 213(a)(3) of the Act requires EPA to promulgate emissions standards for those classes or categories of new nonroad engines, vehicles, and equipment that in EPA's judgment cause or contribute to such air pollution. EPA is proposing in this document that nonroad SI engines rated above 19 kW and all land-based recreational nonroad SI engines ''cause or contribute'' to such air pollution.

Where EPA determines that other emissions from nonroad engines, vehicles, or equipment significantly contribute to air pollution that may reasonably be anticipated to endanger public health or welfare, section 213(a)(4) authorizes EPA to establish (and from time to time revise) emission standards from those classes or categories of new nonroad engines, vehicles, and equipment that EPA determines cause or contribute to such air pollution, taking into account cost, noise, safety and energy factors associated with the application of technology used to meet the standards. EPA has made this determination for emissions of particulate matter (PM) and smoke from nonroad engines (see 59 FR 31306, June 17, 1994). In that rulemaking, EPA found that smoke emissions from nonroad engines significantly contribute to such air pollution based on smoke's relationship to the particulate matter that makes up smoke. Particulate matter can be inhaled into the lower lung cavity, posing a potential health threat. EPA cited recent studies associating PM with increased mortality. EPA also noted smoke's impact on visibility and soiling of urban buildings and other property.[4] EPA also promulgated standards for emissions of PM and smoke from nonroad diesel engines in that rulemaking. With this document, EPA is proposing to find that emissions of PM from nonroad SI engines rated above 19 kW and all land-based recreational nonroad SI engines ''cause or contribute'' to such air pollution, taking cost, noise, safety and energy factors into account.

II. Emission Modeling

EPA is in the process of developing its updated Nonroad Emissions Model, which computes nationwide emission levels for a wide variety of nonroad engines. The model incorporates information on emission rates, operating data, and population to determine annual emission levels of various pollutants. Population and operating data, including load factor and operating rate, are determined separately for dozens of different applications. Load factor refers to the degree to which an engine is loaded, with full-power operation indicated by a load factor of 1.0. In addition to gasoline, Large SI engines can operate on liquefied petroleum gas (LPG) or compressed natural gas (CNG). An EPA memorandum describes the detailed inputs and methodology for this modeling.[5] Some of the key operating parameters from the model are reproduced in Tables 1 and 2.

TABLE 1.—OPERATING PARAMETERS AND POPULATION ESTIMATES FOR VARIOUS APPLICATIONS OF ENGINES RATED ABOVE 19 kW

Application	Load factor	Hours per year	1996 population	2010 population	Percent LPG/CNG
Forklift	0.30	1500	442,000	547,063	95
Generator	0.68	115	205,990	202,177	50
Welder	0.51	208	55,495	67,872	50
Commercial turf	0.60	733	41,440	55,074	0
Pump	0.69	221	41,104	44,830	50
Air compressor	0.56	484	24,182	28,633	50
Baler	0.62	68	21,937	27,597	0
Irrigation set	0.60	716	17,800	9,724	50
Aerial lift	0.46	361	15,734	15,555	50
Scrubber/sweeper	0.71	516	14,154	13,955	50
Chipper/grinder	0.78	488	12,218	16,262	50
Leaf blower/vacuum	0.75	56	10,823	14,384	0
Oil field equipment	0.90	1104	8,792	8,924	100
Sprayer	0.65	80	8,635	10,863	0
Trencher	0.66	402	8,168	9,604	50
Specialty vehicle/cart	0.58	65	7,833	8,726	50
Skid/steer loader	0.58	310	7,795	9,164	50
Other general industrial	0.54	713	3,987	3,942	50
Rubber-tired loader	0.71	512	3,476	4,088	50

[2] ''Nonroad Engine and Vehicle Emission Study—Report and Appendices,'' EPA–21A–201, November 1991 (available in Air docket A–96–40).

[3] The terms HC (hydrocarbon) and VOC (volatile organic carbon) refer to similar sets of chemicals and are generally used interchangeably.

[4] The nonroad study (NEVES) found that nonroad sources are responsible for approximately 5.55% of the total anthropogenic inventory of PM emissions and over one percent of total PM emissions in six to ten of the thirteen nonattainment areas surveyed.

[5] ''Emission Modeling for Large SI Engines,'' EPA memorandum from Alan Stout to Docket A–98–01 (document II–B–01), January 28, 1999.

TABLE 1.—OPERATING PARAMETERS AND POPULATION ESTIMATES FOR VARIOUS APPLICATIONS OF ENGINES RATED ABOVE 19 kW—Continued

Application	Load factor	Hours per year	1996 population	2010 population	Percent LPG/CNG
Gas compressor	0.60	8500	3,023	1,620	100
Paving equipment	0.59	175	2,996	3,524	50
Terminal tractor	0.78	827	2,905	2,872	50
Bore/drill rig	0.79	107	2,618	3,080	50
Ag. tractor	0.62	550	2,152	2,707	0
Concrete/industrial saw	0.78	610	2,133	2,509	50
Rough terrain forklift	0.63	413	1,933	2,273	50
Roller	0.62	621	1,596	1,878	50
Crane	0.47	415	1,584	1,864	50
Other material handling	0.53	386	1,535	1,518	50
Paver	0.66	392	1,337	1,573	50
Other agriculture equipment	0.55	124	1,234	1,552	0
Other construction	0.48	371	1,222	1,436	50
Pressure washer	0.85	115	1,207	2,271	50
Aircraft support	0.56	681	840	1,238	50
Crushing/processing equip	0.85	241	532	628	50
Surfacing equipment	0.49	488	481	567	50
Tractor/loader/backhoe	0.48	870	416	489	50
Hydraulic power unit	0.56	450	339	384	50
Other lawn & garden	0.58	61	333	443	0
Refrigeration/AC	0.46	605	163	226	100

TABLE 2.—OPERATING PARAMETERS AND POPULATION ESTIMATES FOR LAND-BASED RECREATIONAL ENGINES

Application	Load factor	Hours per year	1996 population	2010 population	Percent 2-stroke
ATV/Nonroad Motorcycle*	0.72	135	1,743,801	1,880,196	19
Snowmobile	0.81	121	1,289,302	1,390,148	100
Specialty vehicle	0.58	65	413,492	445,853	43

* Including mini-bikes, mopeds, and go-carts.

Emission modeling runs for the years 2000 and 2010 are summarized in Tables 3 and 4. These tables show relative contributions of the different mobile source categories to the overall emissions inventory. Of the total emissions from mobile sources, nonroad SI engines rated above 19 kW contribute 1 percent, 2 percent, 3 percent, and 0.4 percent of HC, NO_X, CO, and PM emissions in the year 2000. The results for land-based recreational engines reflect the much different emissions profile from two-stroke engines. These engines are estimated to contribute 15 percent of mobile source HC emissions, 9 percent of CO emissions, and 0.2 percent of NO_X emissions. PM emissions from land-based recreational engines amount to 2 percent of total mobile source emissions. Since highway engines account for a large fraction of mobile source emissions, as shown in Tables 3 and 4, the contribution of these engines as a percentage of total nonroad emissions will be significantly higher than that from total mobile sources emissions.

These emission figures are projected to change somewhat by 2010. The contribution of CO emissions from SI engines above 19 kW increases to 4 percent and the contribution of HC and CO emissions from land-based recreational engines increases to 19 percent and 11 percent. Population growth and the effects of regulatory control programs are factored into these later emissions estimates. Table 4 shows that the relative importance of uncontrolled engines grows over time as other engines reduce their emission levels. The effectiveness of all control programs is offset by the anticipated growth in engine populations.

TABLE 3.—MODELED ANNUAL EMISSION LEVELS FOR MOBILE SOURCE CATEGORIES IN 2000

[Thousand short tons.]

Category	NO_X		HC		CO		PM	
	tons	percent	tons	percent	tons	percent	tons	percent
Nonroad SI > 19 kW	227	2	57	1	2,060	3	3	0.4
Recreational SI equip.	25	0.2	1,100	15	6,652	9	16	2
Nonroad SI < 19 kW	82	0.7	623	8	13,859	19	14	2
Marine SI	39	0.4	609	8	2,177	3	30	4
Nonroad diesel	2,803	25	371	5	1,002	1	306	44
Marine diesel	206	2	45	1	76	0.1	30	4
Locomotive	1,075	10	46	1	104	0.1	27	4
Aircraft	178	2	183	2	1,017	1	39	6

TABLE 3.—MODELED ANNUAL EMISSION LEVELS FOR MOBILE SOURCE CATEGORIES IN 2000—Continued

[Thousand short tons.]

Category	NO_X		HC		CO		PM	
	tons	percent	tons	percent	tons	percent	tons	percent
Total Nonroad	4,635	42	3,034	40	26,947	38	465	66
Total Highway	6,397	58	4,482	60	44,244	62	238	34
Total Mobile Source	11,032	100	7,516	100	71,191	100	703	100

TABLE 4.—MODELED ANNUAL EMISSION LEVELS FOR MOBILE SOURCE CATEGORIES IN 2010

[Thousand short tons.]

Category	NO_X		HC		CO		PM	
	tons	percent	tons	percent	tons	percent	tons	percent
Nonroad SI > 19 kW	288	3	46	1	2,427	4	3	0.4
Recreational SI equip.	26	0.3	1,174	19	6,900	11	18	2
Nonroad SI < 19 kW	73	0.8	293	5	11,528	18	15	2
Marine SI	49	0.5	363	6	2,221	3	22	3
Nonroad diesel	2,248	24	249	4	699	1	375	51
Marine diesel	211	2	46	1	78	0.1	31	4
Locomotive	1,075	11	46	1	104	0.2	27	4
Aircraft	209	2	215	4	1,279	2	42	6
Total Nonroad	4,179	44	2,432	40	25,236	39	533	73
Total Highway	5,354	56	3,683	60	40,201	61	200	27
Total Mobile Source	9,533	100	6,115	100	65,437	100	733	100

In presenting this analysis, EPA has estimated national emissions as a proxy for emissions within nonattainment areas. This should be a reasonable approximation due to the fact that the equipment listed in the above tables is generally not isolated to individual areas. However, EPA recognizes that some applications may not contribute equally to emissions in both attainment and nonattainment areas. EPA would like to include current data on the contribution of these sources to nonattainment area emissions when it finalizes a finding based on this proposal and the associated public comments. Accordingly, EPA seeks comments and data that address the degree to which emissions from these engines and equipment contribute to air pollution in nonattainment areas.

EPA's 1991 study analyzed emissions from nonroad engines in several nonattainment areas.[6] The analysis showed that Large SI equipment and SI recreational vehicles contribute to emissions of VOCs, NO_X, CO and PM in the vast majority of the nonattainment areas surveyed. The 1991 study does not provide total inventories for Large SI equipment because equipment categories were aggregated using different criteria than are used in this notice. However, a review of, for example, spark-ignited forklifts in the New York City Consolidated Metropolitan Statistical Area area indicated contributions of 4868, 84 853, 5148 and 27 tons per year of VOCs, CO, NO_X, and PM, respectively. According to the study, spark-ignited recreational vehicles (mini-bikes and mopeds, and others vehicle types) in the New York City Consolidated Metropolitan Statistical Area contributed 11 280, 19 054, 82 and 217 tons of these pollutants per year.[7] In the South Coast (Los Angeles) area, spark-ignited forklifts contributed 4612, 80 649, 4893 and 25 tons of VOCs, CO, NO_X and PM, respectively, while SI recreational vehicles contributed 8066, 28 465, 53 and 80 tons of these pollutants per year. Many of the factors that EPA used in creating the emission estimates for the 1991 study have been revised in the current modeling as EPA gathers more complete information regarding, for example, emission factors and population estimates. These revisions do not, however, change the central analysis of contribution in the 1991 study.

III. General Approach for an Emission Control Program

EPA has made an extensive effort to coordinate EPA's anticipated regulatory program for spark-ignited engines rated above 19 kW with the requirements adopted by the California Air Resources Board (California ARB). The California ARB finalized emission standards for these engines on October 22, 1998. An EPA memorandum provides additional information about the requirements approved by the California ARB and highlights a few issues that will warrant further attention in the EPA rulemaking.[8]

EPA believes that equipment in the large nonroad SI category generally use engines of similar design. The same is true of engines in the recreational vehicle category. Manufacturers will generally be able to produce engine models with the projected control technologies that can be used in most applications in a category without significant modification. EPA seeks additional information on relevant similarities and distinctions between engines used in these categories.

[6] See ''Nonroad Engine and Vehicle Emission Study—Report and Appendices'' and ''Nonroad Inventory Tables: Inventories A and B,'' in EPA Air Docket A–91–24.

[7] The New York City CMSA includes New York City, Long Island, parts of New York north of New York City, parts of Northern New Jersey and parts of Connecticut.

[8] ''California Requirements for Large SI Engines and Possible EPA Approaches,'' EPA memorandum from Alan Stout to Docket A–98–01 (Document II–B–02), January 28, 1999.

IV. Conclusion

Based on the analysis described in this document, EPA proposes that emissions of HC, NO_X, and CO from nonroad spark-ignition engines rated above 19 kW and from nonroad land-based spark-ignition recreational engines contribute to ozone or carbon monoxide concentrations in more than one ozone or CO nonattainment area, and emissions of PM from such engines cause or contribute to air pollution that may reasonably be anticipated to endanger public health or welfare.

V. Public Participation

Publication of this document opens a formal comment period for this proposal. EPA will accept comments for the period indicated under **DATES** above. The Agency encourages all parties that have an interest in the program described in this document to offer comment on all aspects of this rulemaking, including the memoranda referenced in this document. All comments, with the exception of proprietary information, should be directed to the EPA Air Docket Section, Docket No. A–97–50 before the date specified above. The Agency will hold a public hearing if one is requested, as noted under **DATES** above.

Commenters wishing to submit proprietary information for consideration should clearly separate such information from other comments by (1) labeling proprietary information ''Confidential Business Information'' and (2) sending proprietary information directly to the contact person listed (see **FOR FURTHER INFORMATION CONTACT**) and not to the public docket. This will help ensure that proprietary information is not inadvertently placed in the docket. If a commenter wants EPA to use a submission of confidential information as part of the basis for the final rule, then a nonconfidential version of the document that summarizes the key data or information should be sent to the docket.

Information covered by a claim of confidentiality will be disclosed by EPA only to the extent allowed and in accordance with the procedures set forth in 40 CFR part 2. If no claim of confidentiality accompanies the submission when it is received by EPA, it will be made available to the public without further notice to the commenter.

VI. Administrative Requirements

A. Administrative Designation and Regulatory Analysis

Under Executive Order 12866, the Agency must determine whether this regulatory action is ''significant'' and therefore subject to Office of Management and Budget (OMB) review and the requirements of the Executive Order (58 FR 51735, Oct. 4, 1993). The order defines ''significant regulatory action'' as any regulatory action that is likely to result in a rule that may:

(1) Have an annual effect on the economy of $100 million or more or adversely affect in a material way the economy, a sector of the economy, productivity, competition, jobs, the environment, public health or safety, or State, local, or tribal governments or communities.

(2) Create a serious inconsistency or otherwise interfere with an action taken or planned by another agency;

(3) Materially alter the budgetary impact of entitlements, grants, user fees, or loan programs or the rights and obligations of recipients thereof; or, (4) Raise novel legal or policy issues arising out of legal mandates, the President's priorities, or the principles set forth in the Executive Order.

EPA has submitted this proposed finding to the Office of Management and Budget pursuant to Executive Order 12866.

B. Regulatory Flexibility

The Regulatory Flexibility Act (RFA) generally requires an agency to conduct a regulatory flexibility analysis of any rule subject to notice and comment requirements, unless the agency certifies that the rule will not have a significant economic impact on a substantial number of small entities. Small entities include small businesses, small not-for-profit enterprises, and small governmental jurisdictions.

The Agency certifies that this proposal will not have a significant economic impact on a substantial number of small entities. This proposal involves no requirements that would impose any burden on industry or other segments of society. A finding that Large SI engines cause or contribute to air pollution in at least two nonattainment areas, however, will lead EPA to initiate a rulemaking to set emission standards for these engines. In that separate rulemaking, EPA will review whether the proposed regulations would have a significant economic impact on a substantial number of small entities. The subsequent rulemaking will provide ample opportunity for notice and comment.

C. Paperwork Reduction Act

This proposal contains no requirements for collecting, storing, or reporting information.

D. Unfunded Mandates Reform Act

Title II of the Unfunded Mandates Reform Act of 1995 (UMRA), Pub .L. 104–4, establishes requirements for federal agencies to assess the effects of their regulatory actions on state, local, and tribal governments and the private sector. Under section 202 of the UMRA, EPA generally must prepare a written statement, including a cost-benefit analysis, for proposed and final rules with ''federal mandates'' that may result in expenditures to state, local, and tribal governments, in the aggregate, or to the private sector, of $100 million or more in any one year. Before promulgating an EPA rule for which a written statement is needed, section 205 of the UMRA generally requires EPA to identify and consider a reasonable number of regulatory alternatives and adopt the least costly, most cost-effective, or least burdensome alternative that achieves the objectives of the rule. The provisions of section 205 do not apply when they are inconsistent with applicable law. Moreover, section 205 allows EPA to adopt an alternative other than the least costly, most cost-effective, or least burdensome alternative if the Administrator publishes with the final rule an explanation of why that alternative was not adopted. Before EPA establishes any regulatory requirements that may significantly or uniquely affect small governments, including tribal governments, it must have developed under section 203 of the UMRA a small government agency plan. The plan must provide for notifying potentially affected small governments, enabling officials of affected small governments to have meaningful and timely input in the development of EPA regulatory proposals with significant federal intergovernmental mandates, and informing, educating, and advising small governments on compliance with the regulatory requirements.

EPA has determined that this proposed finding does not contain federal mandates that may result in expenditures of $100 million or more for State, local, and tribal governments, in the aggregate, or the private sector in any one year. The rule does not impose any enforceable duties on State, local, or tribal governments. This rule also contains no regulatory requirements that might significantly or uniquely affect small governments. In addition, there will be no economic effects resulting from this proposed rule Thus, this proposed rule is not subject to the requirements of sections 202 and 205 of the UMRA.

E. National Technology Transfer and Advancement Act

Section 12(d) of the National Technology Transfer and Advancement Act of 1995 (''NTTAA''), Public Law 104–113, section 12(d) (15 U.S.C. 272 note) directs EPA to use voluntary consensus standards in its regulatory activities unless doing so would be inconsistent with applicable law or otherwise impractical. Voluntary consensus standards are technical standards (e.g., materials specifications, test methods, sampling procedures, and business practices) that are developed or adopted by voluntary consensus standards bodies. NTTAA directs EPA to provide Congress, through OMB, explanations when the Agency decides not to use available and applicable voluntary consensus standards.

This proposed finding involves no technical standards.

F. Protection of Children

Executive Order 13045, entitled ''Protection of Children from Environmental Health Risks and Safety Risks'' (62 FR 19885, April 23, 1997), applies to a rule that is determined to be ''economically significant,'' as defined under Executive Order 12866, if the environmental health or safety risk addressed by the rule has a disproportionate effect on children. For these rules, the Agency must evaluate the environmental health or safety effects of the planned rule on children; and explain why the planned regulation is preferable to other potentially effective and reasonably feasible alternatives considered by the Agency.

This proposed finding is not subject to Executive Order 13045, because it does not involve decisions on environmental health or safety risks that may disproportionately affect children.

G. Enhancing the Intergovernmental Partnership under Executive Order 12875

Under Executive Order 12875, EPA may not issue a regulation that is not required by statute and that creates a mandate upon a State, local or tribal government, unless the Federal Government provides the funds necessary to pay the direct compliance costs incurred by those governments, or EPA consults with those governments. If EPA complies by consulting, Executive Order 12875 requires EPA to provide to the Office of Management and Budget a description of the extent of EPA's prior consultation with representatives of affected State, local and tribal governments, the nature of their concerns, copies of any written communications from the governments, and a statement supporting the need to issue the regulation. In addition, Executive Order 12875 requires EPA to develop an effective process permitting elected officials and other representatives of State, local and tribal governments ''to provide meaningful and timely input in the development of regulatory proposals containing significant unfunded mandates.''

This rule would not create a mandate on State, local or tribal governments. The rule would not impose any enforceable duties on these entities. This rule would be implemented at the federal level and would impose no compliance obligations on any party. Accordingly, the requirements of section 1(a) of Executive Order 12875 do not apply to this rule.

H. Consultation and Coordination With Indian Tribal Governments

Under Executive Order 13084, EPA may not issue a regulation that is not required by statute, that significantly or uniquely affects the communities of Indian tribal governments, and that imposes substantial direct compliance costs on those communities, unless the Federal government provides the funds necessary to pay the direct compliance costs incurred by the tribal governments, or EPA consults with those governments. If EPA complies by consulting, Executive Order 13084 requires EPA to provide to the Office of Management and Budget, in a separately identified section of the preamble to the rule, a description of the extent of EPA's prior consultation with representatives of affected tribal governments, a summary of the nature of their concerns, and a statement supporting the need to issue the regulation. In addition, Executive Order 13084 requires EPA to develop an effective process permitting elected officials and other representatives of Indian tribal governments ''to provide meaningful and timely input in the development of regulatory policies on matters that significantly or uniquely affect their communities.''

This rule would not significantly or uniquely affect the communities of Indian tribal governments. This rule would be implemented at the federal level and would impose no compliance obligations on any party. Accordingly, the requirements of section 3(b) of Executive Order 13084 do not apply to this rule.

List of Subjects in 40 CFR Part 83

Environmental protection, Administrative practice and procedure, Confidential business information, Gasoline, Imports, Motor vehicle pollution, Reporting and recordkeeping requirements, Research, Warranties.

Dated: January 29, 1999.

Carol M. Browner,

Administrator.

[FR Doc. 99–2694 Filed 2–5–99; 8:45 am]

BILLING CODE 6560–50–P

DEPARTMENT OF HEALTH AND HUMAN SERVICES

Administration for Children and Families

45 CFR Part 1309

RIN 0970—AB54

Head Start Program

AGENCY: Administration on Children, Youth and Families (ACYF), Administration for Children and Families (ACF), HHS.

ACTION: Notice of Proposed Rulemaking.

SUMMARY: The Administration on Children, Youth and Families is issuing this Notice of Proposed Rulemaking to implement a statutory provision that authorizes Head Start grantees to use grant funds to finance the construction and major renovation of Head Start facilities.

DATES: In order to be considered, comments on this proposed rule must be received on or before April 9, 1999.

ADDRESSES: Please address comments to the Associate Commissioner, Head Start Bureau, Administration for Children, Youth and Families, P.O. Box 1182, Washington, DC 20013. Beginning 14 days after close of the comment period, comments will be available for public inspection in Room 2219, 330 C Street, SW., Washington, DC 20201, Monday through Friday, between the hours of 9 a.m. and 4 p.m.

FOR FURTHER INFORMATION CONTACT: Douglas Klafehn, Deputy Associate Commissioner, Head Start Bureau, Administration for Children, Youth and Families, P.O. Box 1182, Washington, DC 20013; (202) 205–8572.

SUPPLEMENTARY INFORMATION:

I. Program Purpose

Head Start is authorized under the Head Start Act (42 U.S.C. 9801 *et seq.*). It is a national program providing comprehensive developmental services to low-income preschool children, primarily age three to the age of compulsory school attendance, and their families. To help enrolled children achieve their full potential, Head Start programs provide comprehensive

health, nutritional, educational, social and other services. In addition, Section 645A of the Head Start Act provides authority to fund programs serving infants and toddlers. Programs receiving funds under the authority of this section are referred to as Early Head Start programs.

Head Start programs are required to provide for the direct participation of the parents of enrolled children in the development, conduct, and direction of local programs. Parents also receive training and education to foster their understanding of and involvement in the development of their children. In fiscal year 1997, Head Start served 794,000 children through a network of over 2,000 grantees and delegate agencies.

While Head Start is intended to serve primarily children whose families have incomes at or below the poverty line, or who receive public assistance, Head Start policy permits up to 10 percent of the children in local programs to be from families who do not meet these low-income criteria. Tribal grantees can exceed this limit under certain conditions. The Act also requires that a minimum of 10 percent of the enrollment opportunities in each program be made available to children with disabilities. Such children are expected to participate in the full range of Head Start services and activities with their non-disabled peers and to receive needed special education and related services.

II. Summary of the Proposed Regulation

The authority for this Notice of Proposed Rulemaking (NPRM) is section 644(g) of the Head Start Act (42 U.S.C. 9839). Paragraph (g) was added by Public Law 103–252, Title I of the Human Services Amendments of 1994. Section 644(g) states that the Secretary may authorize the use of federal financial assistance to make payments for capital expenditures, such as expenditures for the construction and major renovation of facilities. Authorization for the use of grant funds in this manner requires a determination by the Secretary that suitable facilities are not otherwise available to Indian tribes, rural communities, and other low-income communities to carry out Head Start programs, that the lack of suitable facilities (including public school facilities) will inhibit the operation of such programs, and that construction of such facilities is more cost effective than the purchase or renovation of available facilities. The Act also provides that grant funds may be used to pay the cost of amortizing the principal and paying interest on loans. It directs the Secretary to establish uniform procedures for Head Start agencies to request approval to use grant funds to construct new facilities or make major renovations to existing facilities.

A Notice of Proposed Rulemaking (NPRM) on Purchase of Head Start Facilities was published in the **Federal Register** on December 1, 1994 (59 FR 61575). The Final Rule on Purchase of Head Start Facilities, published elsewhere in this issue of the **Federal Register**, does not address construction or major renovation since the statutory change concerning construction and major renovation occurred too close to publication of that NPRM to permit the inclusion of procedures covering construction and major renovation. We recognize, however, that procedures covering the purchase, construction and major renovation of facilities using Head Start grant funds should be consistent and should be brought together in one place. Therefore, the procedures on construction and major renovation when made final will amend the final rule on purchase of Head Start facilities so that 45 CFR part 1309 will cover, in one single rule, the use of grant funds to purchase, construct and make minor renovations to Head Start facilities.

The proposed rule:

- Defines major renovation to mean structural changes to the foundation, roof, floor, or exterior or load-bearing walls of a facility, or the extension of a facility to increase its floor area. Major renovation also means extensive alteration of a facility such as to significantly change its function and purpose, even if such renovation does not include any structural change to the facility.
- Specifies what information the grantee must provide to establish eligibility to be awarded grant funds to construct or make a major renovation to a Head Start facility.
- Requires that a grantee receive approval from HHS of the final working drawings and specifications for construction or major renovation before it advertises for bids.
- Requires that all construction and major renovation contracts be on a lump sum fixed-price basis.

III. Section by Section Discussion of the NPRM

We propose to revise the heading of Part 1309 to reflect the addition of major renovation and construction requirements in this part. The revised heading is ''Head Start Facilities Purchase, Major Renovation and Construction.''

Section 1309.1—Purpose and application

We propose to revise § 1309.1 to include reference to the applicability of part 1309 to the construction or major renovation of Head Start facilities in addition to the purchase of such facilities.

Section 1309.3—Definitions

We propose to revise § 1309.3 by adding five definitions. The definition for ''construction,'' a new definition, is based on the statutory language found in section 644(g)(2)(A) of the Head Start Act, which states that grant funds may be used to pay for ''construction of facilities that are not in existence on the date'' the Secretary determines the grantee meets the statutory criteria for eligibility. In addition, we revised the definition of ''acquire'' to encompass construction in whole or part.

The second definition we propose is ''incidental alterations and renovations.'' This definition is added to distinguish such alterations and renovations from major renovations which are defined also in this proposed rule. Alterations and renovations are considered ''incidental'' if they readily modify a facility to meet program requirements, if the cost of the alterations and renovations do not exceed the lesser of $150,000 or 25 percent of total direct costs expected to be approved for the grantee's budget period, and the renovations or alterations do not meet the definition for major renovations described below. A third new definition is for ''major renovation,'' which has two parts. Major renovation means structural changes to the foundation, roof, floor, or exterior or load-bearing walls of a facility, or the extension of an existing facility to increase its floor area, or extensive alteration of a facility such as to significantly change its function and purpose, even if such renovation does not include any structural change to the facility.

Classification as a major renovation will have two consequences: the grantee will be able to pay the principal and interest on a loan to finance the work, and the grantee will be required to meet the preliminary eligibility and other criteria found in this regulation.

The fourth and fifth new definitions we propose are for the terms ''suitable facility'' and ''useable facility.'' The terms are necessary because section 644(g) of the Head Start Act requires that a determination be made that no ''suitable'' facility is available within a community before a grantee can be permitted to use grant funds for the

construction or renovation of a facility. The term ''suitable'' means a facility in the grantee's service area that is owned by the grantee or is available for lease or purchase, is useable as a Head Start facility, and is not more expensive to purchase, own or lease than other comparable facilities. The term ''useable'' is included and intended to describe a facility not in need of renovation to increase its size or to bring it into compliance with local licensing and code requirements and the access requirements of the Americans with Disabilities Act (ADA), if applicable, and section 504 of the Rehabilitation Act of 1973.

Section 1309.10—Application

We propose to revise the heading of § 1309.10 to read ''Applications for the purchase, construction and major renovation of facilities.'' We also propose to revise § 1309.10, which appears in the final rule on purchase of Head Start facilities which is published today, to include requirements for application for the construction and major renovation of facilities with Head Start funds. The proposed provision will establish requirements for applications from Head Start grantees who wish to obtain funds to: (1) Purchase existing facilities; (2) continue to pay costs of purchases begun during the period from December 21, 1986 to October 7, 1992; (3) construct new facilities; (4) renovate facilities which they own or lease; or (5) purchase facilities for the purpose of renovating them to make them usable for their Head Start programs. With the exception of existing paragraphs (f) and (r) which we have redesignated (e) and (q), we propose modifications in all of the existing provisions of § 1309.10 to apply to applications for construction and major renovation as well as for purchase of existing facilities. We propose to incorporate the existing paragraph (d) into a new paragraph (b). In addition, a proposed amendment to the newly redesignated paragraph (l) requires that a grantee proposing to undertake a major renovation of a leased facility must have a lease with a duration of at least five years from the date the renovation is completed. We propose to add to the newly redesignated paragraph (m) a requirement for an assessment of the impact of proposed construction or major renovation under the National Environmental Policy Act of 1969 (42 U.S.C. 4332(2)(C)). We propose further that before submitting an application under proposed section 1309.10, grantees seeking funds for construction or for major renovations must establish their eligibility under one of two new provisions proposed as §§ 1309.49 and 1309.50.

Section 1309.11—Cost comparisons for purchase, construction and major renovation of facilities

We are proposing to amend § 1309.11, which appears as a final rule published today, to apply to cost comparisons for construction and major renovation of facilities. We are proposing to amend the heading of this section to read ''Cost comparisons for purchase, construction and major renovation of facilities'' to apply the proposed provisions of § 1309.11 to cost comparisons for construction and major renovation of facilities. Paragraph (a) of the proposed rule requires that a cost comparison be conducted subject to the proposed paragraph (c) which is expanded to include not only purchase of facilities but also comparisons required for construction and major renovations of facilities. In conformance with section 644(g)(1) of the Head Start Act, paragraph (c)(2) of the proposed rule will require Head Start grantees requesting funding for the construction of a new facility to compare the cost of constructing to the cost of owning, purchasing or leasing an alternative facility which may be made useable as a Head Start facility by means of renovation of the facility. Paragraph (c)(3) proposes that grantees applying for funding to undertake a major renovation of a facility must compare the cost of the proposed renovation, including the cost of purchasing the facility to be renovated (if the grantee is proposing to purchase the facility) to the cost of constructing a facility of similar size. ACF proposes to request grantees to furnish this information in order that it may properly exercise discretion in selecting grantees to receive funding under section 644(g) of the Head Start Act. We are proposing that paragraph (e) include clarification that the period of comparison for renovations of leased facilities is the period of the lease remaining after the major renovation is completed. Paragraph (f) is identical to the final rule.

Section 1309.21 Recording of Federal interest and other protection of federal interest

We propose to apply the same provisions for the subordination of Federal interest for construction and major renovation of Head Start facilities as are found in the final rule for the purchase of facilities. We propose to revise paragraph (a) of this section to read ''The Federal government has an interest in all real property and equipment acquired or upon which major renovations have been undertaken with grant funds for use as a Head Start facility. The responsible HHS official may subordinate the federal interest in such property to that of a lender which finances the acquisition or major renovation costs subject to the conditions set forth in paragraph (f) of this section.'' We are proposing some technical changes in paragraph (d) of this section by inserting the words ''or at the commencement of major renovation or construction of a facility'' after the word purchasing, and in (d)(1) we propose to substitute the words ''acquisition or major renovation'' for the word ''purchase'' and finally we propose to revise paragraph (f) by substituting the word ''purchased'' with the words ''acquired or upon which major renovations have been undertaken.''

Section 1309.23 Insurance, bonding and maintenance

In this section we propose to add a sentence clarifying that for facilities which have been constructed or renovated, insurance coverage must begin at the commencement of the expenditure of costs in fulfillment of construction or renovation work.

Sections 1309.40 through 1309.43

The proposed revisions to §§ 1309.40, 1309.41, 1309.42, and 1309.43 replace the word ''purchase'' with ''acquisition or major renovation.'' Sections 1309.41, 1309.42 and 1309.43 contain technical edits also.

A new subpart F has been added to cover very specific requirements on construction and major renovation of Head Start Facilities.

Section 1309.49—Eligibility—construction

Section 1309.50—Eligibility—major renovation

These two sections conform to section 644 (g)(1) in requiring applicants to demonstrate that the Head Start program serves an Indian Tribe or is available in a low-income or rural community and that the lack of a suitable facility in the grantee's service area will inhibit the operation of the program.

Applicants requesting funding for construction of facilities must demonstrate that there are no facilities available for lease or purchase or facilities that are available are not suitable for use by a Head Start program.

Grantees requesting funds for major renovations must demonstrate that there are no facilities available for lease or purchase or that facilities available are not suitable for use without major

renovations. Applicants for funding for major renovations and who are leasing the facilities must have a lease guaranteeing the use of the facility for a minimum period of five years from the time the renovations are completed.

We are proposing further in this rule that all applicants support, whenever possible, the determination that there are no suitable facilities with a written statement by a licensed real estate professional in the grantee's service area.

Section 1309.51—Approval of drawings and specifications

In this section we propose to require that grantees receive approval from the responsible HHS official of the final drawings and specifications for the proposed construction or major renovation before soliciting bids or awarding a contract for the work. The architect or engineer shall make a certification to the responsible HHS official of whether in his or her professional opinion the plans and specifications conform to Head Start programmatic requirements and are appropriate from a cost and technical point of view.

Section 1309.52—Procurement procedures

Paragraph (a) of this section refers to the Department's procurement policy, found in 45 CFR parts 74 and 92, and reiterates the basic rule that all facility transactions be conducted in a manner to provide, to the maximum extent practicable, open and free competition. Paragraph (b) provides that all construction and major renovation contracts shall be on a lump sum fixed-price basis, and prohibits the grantee from entering into a contract without prior written approval of the responsible HHS official. Paragraph (c) requires prior written approval of the responsible HHS official for unsolicited modifications that would change the scope or objective of the project. In paragraph (d) we propose that all contracts for HHS-funded construction or major renovation of Head Start facilities contain a clause stating that the responsible HHS official or his or her designee shall have access at all reasonable times to the work being performed pursuant to the contract, at any stage of preparation or progress, and requiring the contractor to facilitate such access and inspection.

The intent of these provisions is to protect the grantee and the Department against substandard work and cost overruns.

Section 1309.53—Inspection of work

This section proposes that the grantee shall provide competent and adequate architectural or engineering inspection at the work site to insure that the completed work conforms to the approved plans and specifications. Also, a final architectural or engineering inspection report of the facility must be submitted to the responsible HHS official within 30 calendar days of substantial completion of the construction or major renovation. This is intended to insure that the project is being properly managed and that any problems or unusual circumstances are identified and dealt with as early as possible.

Section 1309.54—Davis-Bacon Act

Construction and major renovation contracts and subcontracts are subject to the Davis-Bacon Act (40 U.S.C. 276a *et seq.*). In this section we propose that the grantee must provide an assurance that all laborers and mechanics employed by contractors or subcontractors in the construction or renovation of Head Start facilities shall be paid wages at not less than those prevailing on similar construction in the locality, as determined by the Secretary of Labor. Grantees are required to comply with the requirements found in the Davis-Bacon Act and the regulations of the Department of Labor which implement that Act. Those regulations are found in Title 29 of the Code of Federal Regulations.

IV. Impact Analysis

Executive Order 12866

Executive Order 12866 requires that regulations be drafted to ensure that they are consistent with the priorities and principles set forth in the Executive Order. The Department has determined that this rule is consistent with these priorities and principles. This Notice of Proposed Rulemaking implements the statutory authority for Head Start grantees to apply to use grant funds to construct or make major renovations to facilities. Congress made no additional appropriation to fund this new authority, however, and so any money spent toward the construction or renovation of Head Start facilities is money that would have been spent otherwise by the program or other programs from the same appropriation amount.

Regulatory Flexibility Act of 1980

The Regulatory Flexibility Act (5 U.S.C. CH. 6) requires the Federal government to anticipate and reduce the impact of rules and paperwork requirements on small businesses. For each rule with a ''significant economic impact on a substantial number of small entities'' an analysis must be prepared describing the rule's impact on small entities. Small entities are defined by the Act to include small businesses, small non-profit organizations and small governmental entities. While these regulations would affect small entities, they would not affect a substantial number. Furthermore, the cost of the application process and other activities undertaken as a result of these regulations will not have a significant economic impact because the Head Start program covers 80% of the allowable costs of grantees under the program. The remaining costs associated with compliance are part of the share of costs grantees agree to meet from their own resources when they enter the Head Start program. For these reasons, the Secretary certifies that this rule will not have a significant impact on substantial numbers of small entities.

Paperwork Reduction Act

Under the Paperwork Reduction Act of 1995, Pub. L. 104–13, all Departments are required to submit to the Office of Management and Budget (OMB) for review and approval any reporting or recordkeeping requirement inherent in a proposed or final rule. This NPRM contains information collection and record-keeping requirements in § 1309.10 (application), 1309.49 (eligibility construction), and 1309.50 (major renovation) which will be submitted to OMB for review and approval in accordance with the Paperwork Reduction Act.

The respondents to the information collection requirements in the rule are Head Start grantees who may be State or local non-profit agencies or organizations. The Department needs to require this collection of information in order to assure that grantees who apply for approval to construct or make major renovations to a facility with Head Start funds have followed certain necessary legal and administrative procedures. Also, these collection of information requirements are necessary for monitoring purposes.

The grantees who will be affected by these requirements will be those who request approval and are approved to construct or make major renovations to a facility for the purpose of operating a Head Start program. Based on the average number of grantees who requested approval from the Department since the statutory authority became effective, the estimated annual number of grantees that will be affected is 200.

The actual submittal of an application under § 1309.10 from a grantee to construct or make a major renovation to a facility is a one time activity which is preceded by a number of preparatory activities. We estimate the time it will take to prepare the application in accordance with the requirements of this rule is 40 hours per grantee, calculated over a period of time. On an annual basis, the total hours estimated for submittal of applications from grantees are 8,000.

The Administration for Children and Families (ACF) will consider comments by the public on these proposed collection of information in:

- Evaluating whether the proposed collections are necessary for the proper performance of the functions of ACF, including whether the information will have practical utility;
- Evaluating the accuracy of ACF's estimate of the burden of the proposed collections of information;
- Enhancing the quality, usefulness, and clarity of the information to be collected; and
- Minimizing the burden of the collection of information on those who are to respond.

OMB is required to make a decision concerning the collections of information contained in this final rule between 30 and 60 days after publication of this document in the **Federal Register**. Therefore, a comment is best assured of having its full effect if OMB receives it within 30 days of publication. Written comments to OMB for the proposed information collection should be sent directly to the following: Office of Management and Budget, Paperwork Reduction Project, 725 17th Street, NW, Washington, DC 20503, Attn: Wendy Taylor.

List of Subjects in 45 CFR Part 1309

Acquisition, Construction, Facilities, Head Start, Real property, Renovation

(Catalog of Federal Domestic Assistance Program Number 93.600, Project Head Start)

Dated: August 3, 1998.

Olivia A. Golden,

Assistant Secretary for Children and Families.

Approved: September 15, 1998.

Donna E. Shalala,

Secretary.

For the reasons set forth in the Preamble, 45 CFR part 1309 is proposed to be amended as follows:

1. The authority citation for part 1309 continues to read as follows:

Authority: 42 U.S.C. 9801 *et seq.*

2. The heading of part 1309 is revised to read as follows:

PART 1309—HEAD START FACILITIES PURCHASE, MAJOR RENOVATION AND CONSTRUCTION

3. Section 1309.1 is revised to read as follows:

§ 1309.1 Purpose and application.

This part prescribes regulations implementing sections 644(c), (f) and (g) of the Head Start Act, 42 U.S.C. 9801 *et seq.*, as they apply to grantees operating Head Start programs under the Act. It prescribes the procedures for applying for Head Start grant funds to purchase, construct, or make major renovations to facilities in which to operate Head Start programs. It also details the measures which must be taken to protect the Federal interest in facilities purchased, constructed or renovated with Head Start grant funds.

4. Section 1309.3 is amended by revising the definition ''acquire'' and adding five new definitions to read as follows:

§ 1309.3 Definitions.

* * * * *

Acquire means purchased or constructed in whole or in part with Head Start grant funds through payments made in satisfaction of a mortgage agreement (both principal and interest), as a down payment, for professional fees, closing costs and any other costs associated with the purchase or construction of the property that are usual and customary for the locality.

* * * * *

Construction means new building, and excludes renovations, alterations, additions, or work of any kind to existing buildings.

* * * * *

Incidental alterations and renovations means improvements to a facility which can be readily made, which are not considered major or structural renovations as defined in this section and the total costs of which do not exceed the lesser of $150,000 or 25 percent of total direct costs approved for a budget period.

Major renovation means structural changes to the foundation, roof, floor, or exterior or load-bearing walls of a facility, or the extension of an existing facility to increase its floor area. Major renovation also means extensive alteration of an existing facility such as to significantly change its function and purpose, even if such renovation does not include any structural change to the facility.

* * * * *

Suitable Facility means a facility that is owned by the grantee or is available for lease or purchase, is useable as a Head Start facility and is not more expensive to purchase, own or lease than other comparable facilities in the grantee's service area.

Useable facility means a facility which is large enough to meet the foreseeable needs of the Head Start program and which complies with local licensing and code requirements and the access requirements of the Americans with Disabilities Act (ADA), if applicable, and section 504 of the Rehabilitation Act of 1973.

5. Section 1309.10 is revised to read as follows:

§ 1309.10 Applications for the purchase, construction and major renovation of facilities.

A grantee which proposes to use grant funds to purchase a facility, or a grantee found eligible under section § 1309.49 to apply for funds to construct a facility, or section § 1309.50 to undertake major renovation of a facility, including facilities purchased for that purpose, must submit a written application to the responsible HHS official. The application must include the following information:

(a) A legal description of the site of the facility, and an explanation of the appropriateness of the location to the grantee's service area, including a statement of the effect that acquisition or major renovation of the facility has had or will have on the transportation of children to the program, on the grantee's ability to collaborate with other child care, social services and health providers, and on all other program activities and services.

(b) Plans and specifications of the facility to be purchased, including information on the size and type of structure, the number and a description of the rooms, and the lot on which the building is located (including the space available for a playground and for parking). If incidental alterations and renovations or major renovations are being proposed to make a facility useable to carry out the Head Start program, a description of the renovations, and the plans and specifications submitted must also describe the facility as it will be after renovations are complete. In the case of a proposed major renovation, a certification by a licensed engineer or architect as to the cost and technical appropriateness of the proposed renovation must be included.

(c) The cost comparison described in § 1309.11 of this part.

(d) The intended uses of the facility proposed for acquisition or major renovation, including information demonstrating that the facility will be

used principally as a Head Start center or a direct support facility for a Head Start program. If the facility is to be used for purposes in addition to the operation of the Head Start program, the grantee must state what portion of the facility is to be used for such other purposes.

(e) An assurance that the facility complies (or will comply when constructed or after completion of the renovations described in paragraph (b) of this section) with local licensing and code requirements, the access requirements of the Americans with Disabilities Act (ADA), if applicable, and section 504 of the Rehabilitation Act of 1973. The grantee also will assure that it has met the requirements of the Flood Disaster Protection Act of 1973, if applicable.

(f) If the grantee proposing to purchase a facility without undertaking major renovations is claiming that the lack of alternative facilities will prevent or would have prevented operation of the program, a statement of how it was determined that there is or was a lack of alternative facilities. This statement must be supported, whenever possible, by a written statement from a licensed real estate professional in the grantee's service area. If a grantee requesting approval of the previous purchase of a facility is unable to provide such statements based on circumstances which existed at the time of the purchase, the grantee and the licensed real estate professional may use present conditions as a basis for making the determination.

(g) The terms of any proposed or existing loan(s) related to acquisition or major renovation of the facility and the repayment plans (detailing balloon payments or other unconventional terms, if any), and information on all other sources of funding of the acquisition or major renovation, including any restrictions or conditions imposed by other funding sources.

(h) A statement of the effect that the acquisition or major renovation of the facility would have on the grantee's meeting of the non-Federal share requirement of section 640(b) of the Head Start Act, including whether the grantee is seeking a waiver of its non-Federal share obligation under that section of the Act.

(i) Certification by a licensed engineer or architect that the building proposed to be purchased or previously purchase is structurally sound and safe for use as a Head Start facility. The applicant must certify that upon the completion of major renovation to a facility or construction of a facility that inspection by a licensed engineer or architect will be conducted to determine that the facility is structurally sound and safe for use as a Head Start facility.

(j) A statement of the effect that the acquisition or major renovation of a facility would have on the grantee's ability to meet the limitation on development and administrative costs in section 644(b) of the Head Start Act. One-time fees and expenses necessary to the acquisition or major renovation, such as the down payment, the cost of necessary renovation, loan fees and related expenses, and fees paid to attorneys, engineers, and appraisers, are not considered to be administrative costs.

(k) A proposed schedule for acquisition, renovation and occupancy of the facility.

(l) Reasonable assurances that the applicant will obtain a fee simple or such other estate or interest in the site of the facility to be acquired sufficient to assure undisturbed use and possession for the purpose of operating the Head Start program. If the grantee proposes to acquire a facility without also purchasing the land on which the facility is situated, the application must describe the easement, right of way or land rental it will obtain or has obtained to allow it sufficient access to the facility. If the grantee proposes to undertake a major renovation of a leased facility, the grantee must have a lease of at least five years duration from the date the renovation is completed.

(m) An assessment of the impact of the proposed purchase on the human environment if it involves more than a simple incidental alteration and renovation or any significant change in land use, including substantial increases in traffic in the surrounding area due to the provision of Head Start transportation services and an assessment of all proposed construction and major renovation pursuant to section 102(2)(C) of the National Environmental Policy Act of 1969 (42 U.S.C. 4332(2)(C) and its implementing regulations (40 CFR parts 1500–1508), as well as a report showing the results of tests for environmental hazards present in the facility, ground water, and soil (or justification why such testing is not necessary). In addition, such information as may be necessary to comply with the National Historic Preservation Act of 1966 (16 U.S.C. 470f) must be included.

(n) Assurance that the grantee will comply with the requirements of the Uniform Relocation Assistance and Real Property Acquisition Policies Act of 1970, as amended (42 U.S.C. 4601 *et seq.* and 49 CFR Part 24), and information about the costs that may be incurred due to compliance with this Act.

(o) A statement of the share of the cost of acquisition or major renovation that will be paid with grant funds.

(p) For a grantee seeking approval of a previous purchase, a statement of the extent to which it has attempted to comply and will be able to comply with the provisions of § 1309.22 of this part.

(q) Such additional information as the responsible HHS official may require.

6. Section 1309.11 is revised to read as follows:

§ 1309.11 Cost comparisons for purchase, construction and major renovation of facilities.

(a) A grantee proposing to acquire or undertake a major renovation of a facility must submit a detailed estimate of the costs of the proposed activity and compare the cost of the proposed activity as provided under paragraph (c) of this section.

(b) All costs of acquisition, renovation and ownership must be identified, including, but not limited to, professional fees, purchase of the facility to be renovated, renovation costs, moving expenses, additional transportation costs, maintenance, taxes, insurance, and easements, rights of way or land rentals. An independent appraisal of the current value of the facility proposed to be purchased, previously purchased or renovated, made by a professional appraiser, must be included.

(c)(1) Grantees proposing to purchase a facility, without requesting funds for major renovations to the facility, must compare the cost of the proposed facility to the cost of the facility currently used by the grantee, unless the grantee has no current facility, will lose the use of its current facility, intends to continue to use its current facility after it purchases the new facility, or has shown to the satisfaction of the responsible HHS official that its existing facility is inadequate. Where the grantee's current facility is not used as the alternate facility, the grantee must use for comparison a facility (or facilities) available for lease in the grantee's service area and useable as a Head Start facility or which can be made useable through incidental alteration or renovation, the cost of which shall be included in the cost comparison. In the case of an application for approval of the previous purchase of a facility, the cost of the present facility must be compared to the cost of the facility used by the grantee before purchase of its current facility. If the facility used by the grantee before the purchase of its present facility was

deemed inadequate by the responsible HHS official, the grantee had no previous facility, or if the grantee continued to use its previous facility after it purchased the current facility, the alternative facility shall be an available, appropriate facility (or facilities) of comparable size that was available for rent in the grantee's service area at the time of its purchase of the current facility.

(2) Grantees proposing to construct a facility must compare the costs of constructing the proposed facility to the costs of owning, purchasing or leasing an alternative facility which can be made useable through incidental alterations and renovations or major renovations. The alternative facility is one now owned by the grantee or available for lease or purchase in the grantee's service area. If no such facility is available, this statement must explain how this fact was determined and the claim must be supported, whenever possible, by a written statement from a licensed real estate professional in the grantee's service area.

(3) A grantee proposing to undertake a major renovation of a facility must compare the cost of the proposed renovation (including the cost of purchasing the facility to be renovated, if the grantee is proposing to purchase the facility) to the cost of constructing a facility of comparable size.

(d) The grantee must separately delineate the following expenses in the application:

(1) One-time costs, including, but not limited to, cost of purchasing the facility to be renovated, the down payment, professional fees, moving expenses, the cost of site preparation; and

(2) Ongoing costs, including, but not limited to, mortgage payments, insurance premiums, maintenance costs, and property taxes. If the grantee is exempt from the payment of property taxes, this fact must be stated.

(e) The period of comparison for purchase, construction or renovation of a facility is twenty years, except that for the purchase of a modular unit the period of comparison is ten years and the period of comparison for major renovation of a leased facility is the period of the lease remaining after the renovations are completed. For approvals of previous purchases the period of comparison begins on the date the purchase took place.

(f) If the facility is to be used for purposes in addition to the operation of the Head Start program, the cost of use of that part of the facility used for such other purposes must be allocated in accordance with applicable Office of Management and Budget cost principles.

7. Section 1309.21 is amended by revising paragraphs (a), (d), introductory text, (d)(1), and (f), introductory text to read as follows:

§ 1309.21 Recording of Federal interest and other protection of Federal interest.

(a) The Federal government has an interest in all real property and equipment acquired or upon which major renovations have been undertaken with grant funds for use as a Head Start facility. The responsible HHS official may subordinate the federal interest in such property to that of a lender which finances the acquisition or major renovation costs subject to the conditions set forth in paragraph (f) of this section.

* * * * *

(d) Immediately upon purchasing or at the commencement of major renovation or construction of a facility, or receiving permission to use funds for a previously purchased facility the grantee shall record the Notice of Federal Interest in the appropriate official records for the jurisdiction is located. The Notice shall include the following information:

(1) The date of the award of grant funds for the acquisition or major renovation of the property to be used as a Head Start facility, and the address and legal description of the property to be acquired or renovated;

* * * * *

(f) In subordinating its interest in a facility acquired or upon which major renovations have been undertaken with grant funds, the responsible HHS official does not waive application of paragraph (d) of this section and § 1309.22. A written agreement by the responsible HHS official to subordinate the Federal interest must provide:

* * * * *

8. Section 1309.23 is amended by revising paragraph (a) to read as follows:

§ 1309.23 Insurance, bonding and maintenance.

(a) At the time of acquiring or undertaking a major renovation of a facility or receiving approval for the previous purchase of a facility the grantee shall obtain insurance coverage for the facility which is not lower in value than coverage it has obtained for other real property it owns, and which at least meets the requirements of the coverage specified in paragraphs (a)(1) and (2) of this section. For facilities which have been constructed or renovated, insurance coverage must begin at the commencement of the expenditure of costs in fulfillment of construction or renovation work.

* * * * *

9. Section 1309.40 is revised to read as follows:

§ 1309.40 Copies of documents.

Certified copies of the deed, lease, loan instrument, mortgage, and any other legal documents related to the acquisition or major renovation of the facility or to the discharge of any debt secured by the facility must be submitted to the responsible HHS official within ten days of their execution.

10. Section 1309.41 is revised to read as follows:

§ 1309.41 Record retention.

All records pertinent to the acquisition or major renovation of a facility must be retained by the grantee for a period equal to the period of the grantee's ownership (or occupancy, in the case of leased facilities) of the facility plus three years.

11. Section 1309.42 is revised to read as follows:

§ 1309.42 Audit of mortgage.

Any audit of a grantee which has acquired or made major renovations to a facility with grant funds shall include an audit of any mortgage or encumbrance on the facility. Reasonable and necessary fees for this audit are payable with grant funds.

12. Section 1309.43 is revised to read as follows:

§ 1309.43 Use of grant funds to pay fees.

Consistent with the cost principles referred to in 45 CFR part 74 and 45 CFR part 92, reasonable fees and costs associated with and necessary to the acquisition or major renovation of a facility (including reasonable and necessary fees and costs incurred to establish preliminary eligibility under § 1309.50 of this part, or otherwise prior to the submission of an application under § 1309.10 of this Part or acquisition of the facility) are payable with grant funds, but require prior, written approval of the responsible HHS official.

13. A new subpart F is added to read as follows:

Subpart F—Construction and Major Renovation

Sec.
1309.49 Eligibility—Construction.
1309.50 Eligibility—Major renovation.
1309.51 Approval of drawings and specifications.
1309.52 Procurement procedures.
1309.53 Inspection of work.
1309.54 Davis-Bacon Act.

Subpart F—Construction and Major Renovation

§ 1309.49 Eligibility—Construction.

Before submitting an application under section 1309.10 for construction of a facility, the grantee must establish that:

(a) The Head Start program serves an Indian Tribe; or is located in a rural or other low-income community; and

(b) There is a lack of suitable facilities (including public school facilities) in the grantee's service area which will inhibit the operation of the program, as demonstrated by a statement that neither the grantee's current facility nor any facility available for lease or purchase in the service area is suitable for use by a Head Start program. This statement must explain the factors considered, how it was determined that there is a lack of suitable facilities and be supported whenever possible by a written statement from a licensed real estate professional in the grantee's service area.

§ 1309.50 Eligibility—Major renovation.

(a) Before submitting an application under § 1309.10, the grantee must establish that:

(1) The Head Start program serves an Indian Tribe, or is available in a rural or other low-income community; and

(2) There is a lack of suitable facilities (including public school facilities) in the grantee's service area which will inhibit the operation of the program, as demonstrated by a statement that neither the grantee's current facility nor any facility available for lease or purchase in the service area is suitable or could be made suitable without major renovation. This statement must explain the factors considered, how it was determined that there is a lack of suitable facilities and be supported, whenever possible, by a written statement from a licensed real estate professional in the grantee's service area.

(b) In order to receive funding for major renovation of a leased facility, the grantee must have a lease that provides the Head Start program with a term of occupancy of at least five years from the time the renovation will be complete.

§ 1309.51 Approval of drawings and specifications.

(a) The grantee may not advertise for bids or award a contract for any part of construction or major renovation funded by grant funds until final working drawings and specifications have been approved by the responsible HHS official.

(b) Approval by the responsible HHS official shall be based on the certification by a licensed engineer or architect as to the cost and technical appropriateness of the proposed construction or renovation, and on a determination that the drawings and specifications conform to Head Start programmatic requirements.

§ 1309.52 Procurement procedures.

(a) All facility construction and major renovation transactions must comply with the procurement procedures in 45 CFR parts 74 and 92, and must be conducted in a manner to provide, to the maximum extent practicable, open and free competition.

(b) All construction and major renovation contracts for facilities acquired with grant funds require the prior, written approval of the responsible HHS official, and shall be on a lump sum fixed-price basis.

(c) Prior written approval of the responsible HHS official is required for unsolicited modifications that would change the scope or objective of the project, including proposed modifications that would materially alter the costs of the project or increase the amount of grant funds needed to complete the project.

(d) All construction and major renovation contracts for facilities acquired with grant funds shall contain a clause stating that the responsible HHS official or his or her designee shall have access at all reasonable times to the work being performed pursuant to the contract, at any stage of preparation or progress, and requiring that the contractor shall facilitate such access and inspection.

§ 1309.53 Inspection of work.

(a) The grantee must provide and maintain competent and adequate architectural or engineering inspection at the work site to insure that the completed work conforms to the approved plans and specifications.

(b) The grantee must submit a final architectural or engineering inspection report of the facility to the responsible HHS official within 30 calendar days of substantial completion of the construction or renovation.

§ 1309.54 Davis-Bacon Act.

Construction and renovation projects and subcontracts financed with funds awarded under the Head Start program are subject to the Davis-Bacon Act (40 U.S.C. 276a *et seq.*) and the regulations of the Department of Labor, 29 CFR part 5. The grantee must provide an assurance that all laborers and mechanics employed by contractors or subcontractors in the construction or renovation of affected Head Start facilities shall be paid wages at not less than those prevailing on similar construction in the locality, as determined by the Secretary of Labor.

[FR Doc. 99–2861 Filed 2–5–99; 8:45 am]

BILLING CODE 4184–01–U

FEDERAL COMMUNICATIONS COMMISSION

47 CFR Part 73

[MM Docket No. 99–22, RM–9426]

Radio Broadcasting Services; Ashland, WI

AGENCY: Federal Communications Commission.

ACTION: Proposed rule.

SUMMARY: This document requests comments on a petition filed by The State of Wisconsin Educational Communications Board proposing the allotment of Channel 275A to Ashland, Wisconsin, and reservation of the channel for noncommercial educational use. The channel can be allotted to Ashland without a site restriction at coordinates 46–35–24 NL and 90–53–00 WL. Canadian concurrence will be requested for the allotment of Channel *275A at Ashland.

DATES: Comments must be filed on or before March 22, 1999, and reply comments on or before April 6, 1999.

ADDRESSES: Federal Communications Commission, Washington, DC 20554. In addition to filing comments with the FCC, interested parties should serve the petitioner's counsel, as follows: Todd D. Gray, Margaret L. Miller, Christine J. Newcomb, Dow Lohnes & Albertson, PLLC, 1200 New Hampshire Avenue, NW, Suite 800, Washington, DC 20036.

FOR FURTHER INFORMATION CONTACT: Kathleen Scheuerle, Mass Media Bureau, (202) 418–2180.

SUPPLEMENTARY INFORMATION: This is a summary of the Commission's Notice of Proposed Rule Making, MM Docket No. 99–22, adopted January 13, 1999, and released January 29, 1999. The full text of this Commission decision is available for inspection and copying during normal business hours in the Commission's Reference Center (Room 239), 1919 M Street, NW., Washington, DC. The complete text of this decision may also be purchased from the Commission's copy contractors, International Transcription Services, Inc., 1231 20th Street, NW., Washington, DC. 20036, (202) 857–3800, facsimile (202) 857–3805.

Provisions of the Regulatory Flexibility Act of 1980 do not apply to this proceeding.

Members of the public should note that from the time a Notice of Proposed Rule Making is issued until the matter is no longer subject to Commission consideration or court review, all *ex parte* contacts are prohibited in Commission proceedings, such as this one, which involve channel allotments. See 47 CFR 1.1204(b) for rules governing permissible *ex parte* contact.

For information regarding proper filing procedures for comments, see 47 CFR 1.415 and 1.420.

List of Subjects in 47 CFR Part 73

Radio broadcasting.

Federal Communications Commission.

John A. Karousos,

Chief, Allocations Branch, Policy and Rules Division, Mass Media Bureau.

[FR Doc. 99–2732 Filed 2–5–99; 8:45 am]

BILLING CODE 6712–01–P

DEPARTMENT OF TRANSPORTATION

National Highway Traffic Safety Administration

49 CFR Part 571

[Docket No. NHTSA 98–4673, Notice 2]

RIN 2127–AG87

Federal Motor Vehicle Safety Standards; Lamps, Reflective Devices and Associated Equipment

AGENCY: National Highway Traffic Safety Administration (NHTSA), Department of Transportation.

ACTION: Extension of comment period for a notice of proposed rulemaking.

SUMMARY: This notice grants a request to extend the comment period on an agency proposal to reorganize the sections of Standard No. 108, Lamps, Reflective Devices and Associated Equipment, relating to headlighting (63 FR 63258, November 12, 1998). The comment closing date is changed from February 10, 1999 to April 11, 1999.

DATES: Comments on docket NHTSA 98–4673, Notice 1 must be received on or before April 11, 1999.

ADDRESSES: Comments should refer to the Docket NHTSA 98–4673, Notice 1 and be submitted to: Docket Management, Room PL–401, 400 Seventh Street, SW., Washington, DC 20590 (Docket hours are from 10 a.m. to 5 p.m.)

FOR FURTHER INFORMATION CONTACT: Patrick Boyd, Office of Safety Performance Safety Standards, NHTSA, telephone (202) 366–6346.

SUPPLEMENTARY INFORMATION: NHTSA's proposed rewrite of the headlighting sections of FMVSS No. 108 is intended to remove inconsistencies and to facilitate easy reference to the standard. A proposed rewrite of the signal lamp sections of the standard will follow.

DaimlerChrysler, Ford and General Motors requested a 60 day extension of the comment period because they wanted to provide a response coordinated through the newly formed Alliance of Automobile Manufacturers (AAM). Formerly, the American Automobile Manufacturers Association (AAMA) provided such coordinated responses to notices of proposed rulemaking, but it disbanded during the comment period.

After reviewing the situation, NHTSA agrees with the petitioners that additional time is desirable to obtain a coordinated response. The amended text is lengthy, but the amendments are intended primarily to improve clarity. Accordingly, the agency believes that there is good cause for the extension and that the extension is consistent with the public interest. Based on the above considerations, the agency has decided to extend the comment period until April 11, 1999.

Issued on: February 2, 1999.

Stephen R. Kratzke,

Acting Associate Administrator for Safety Performance Standards.

[FR Doc. 99–2937 Filed 2–5–99; 8:45 am]

BILLING CODE 4910–59–P

DEPARTMENT OF TRANSPORTATION

National Highway Traffic Safety Administration

49 CFR Part 583

[Docket No. NHTSA–98–5064]

RIN 2127–AH33

Motor Vehicle Content Labeling

AGENCY: National Highway Traffic Safety Administration (NHTSA), Department of Transportation.

ACTION: Notice of proposed rulemaking.

SUMMARY: This document proposes to amend the regulation NHTSA issued to implement the American Automobile Labeling Act. That Act requires passenger motor vehicles to be labeled with information about their domestic and foreign parts content. Congress recently amended that Act to make a number of changes in the labeling requirement. This proposal would make the regulation consistent with those changes.

DATES: Comments must be received by April 9, 1999.

ADDRESSES: Comments should refer to the docket number, and be submitted to: Docket Management, Room PL–401, 400 Seventh Street, SW, Washington, DC 20590 (Docket hours are from 10 a.m. to 5 p.m.)

FOR FURTHER INFORMATION CONTACT: For nonlegal issues: Henrietta Spinner, Office of Planning and Consumer Programs, National Highway Traffic Safety Administration, 400 Seventh Street, SW, Washington, DC 20590 (202–366–4802).

For legal issues: Edward Glancy, Office of the Chief Counsel, National Highway Traffic Safety Administration, 400 Seventh Street, SW, Washington, DC 20590 (202–366–2992).

SUPPLEMENTARY INFORMATION:

Background

On July 21, 1994, NHTSA published in the **Federal Register** (59 FR 37294) a new regulation, 49 CFR part 583, Automobile Parts Content Labeling, to implement the American Automobile Labeling Act (AALA). That Act, which is codified at 49 U.S.C. 32304, requires passenger motor vehicles to be labeled with information about their domestic and foreign parts content. We encourage interested persons to read the July 1994 notice, as well as the various subsequent notices published by the agency in response to petitions for reconsideration, for a detailed explanation of this program.

As part of the NHTSA Reauthorization Act of 1998,[1] Congress amended the AALA to make a number of changes in the labeling requirement. The changes are set forth in section 7106(d) of the NHTSA Reauthorization Act.

In this notice, the agency is proposing to amend Part 583 to conform it to the amended AALA. We will discuss each of the changes made by the Congress, and any conforming amendments being proposed for part 583, in the order set forth in section 7106(d).

Changes to the AALA; Proposed Conforming Amendments

Determination of Origin of Engine and Transmission (Subparagraph (1)(A) of Section 7106(d))

The original AALA specified, among other things, that vehicles were to be

[1] This Act was part of the Transportation Equity Act for the 21st Century (TEA–21). The full text of TEA–21 and the conference report is available on the Web at http://www.fhwa.dot.gov/tea21/.

labeled with the names of the countries of origin of the engine and transmission. The Act provided that these origin determinations were to be based on the purchase price of materials received at individual engine/transmission plants and were not to include engine/transmission assembly costs.

To reflect the fact these origin determinations did not include engine/transmission assembly costs and to ensure that accurate information was provided to the public, we specified that the label refer to ''Engine Parts'' and ''Transmission Parts'' instead of ''Engines'' and ''Transmissions':

Country of Origin:
Engine Parts: (name of country)
Transmission Parts: (name of country)

Section 7106(d)(1)(A) amended the AALA to specify that assembly and labor costs incurred for the final assembly of engines and transmissions are now to be included in making these country of origin determinations. This means that the terms ''Engine Parts'' and ''Transmission Parts'' will no longer be appropriate for the vehicle content label.

In order to conform part 583 to subparagraph (1)(A), we are proposing to amend the calculation procedures set forth in § 583.8. We are also proposing to amend § 583.5, so that the wording of the vehicle content label would no longer use the terms ''Engine Parts'' and ''Transmission Parts.'' It would instead use the terms ''Engine'' and ''Transmission.''

Definition of Final Assembly Place (Subparagraph (1)(B) of Section 7106(d)

Subparagraph (1)(B) amends the definition of ''final assembly place.'' The Conference Report notes that this amendment ''codifies certain regulations which permit labor costs of parts manufactured at the same location as final vehicle assembly to be included in the vehicle's overall content calculation * * *'' Congressional Record H3929 (May 22, 1998).

We note that subparagraph (1)(B) simply codifies an existing provision of part 583, i.e., the definition of final assembly set forth in § 583.4(b)(4). Therefore, we do not need to make conforming amendments.

Determination of U.S./Canadian Percentage of the Value of Items of Equipment by Outside Suppliers (Subparagraph (1)(C) of Section 7106(d)

The AALA specifies, among other things, that the vehicle content labels must indicate the percentage U.S./Canadian parts content, determined on a carline basis. To enable vehicle manufacturers to calculate this information, the statute requires suppliers of equipment to provide information about the origin of the equipment they supply.

The original AALA specified that, for equipment received from outside suppliers, the equipment is considered U.S./Canadian if it contains at least 70 percent value added in the U.S./Canada. Thus, any equipment that was at least 70 percent U.S./Canadian was valued at 100 percent U.S./Canadian. Any equipment under 70 percent was valued at zero percent. This provision was sometimes referred to as the ''roll-up, roll-down'' provision. It is reflected in § 583.6(c) of the current regulation.

Subparagraph (1)(C) amended the AALA to eliminate the ''roll-down'' portion of this provision. While equipment from an outside supplier that is at least 70 percent U.S./Canadian is still to be valued at 100 percent U.S./Canadian, any equipment under 70 percent is now valued, and must be reported, to the nearest five percent. As the Conference Report stated:

> Under this subparagraph, suppliers would report [U.S./Canadian] content to the nearest five percent. For instance, 38 percent would be reported to the manufacturer as 40 percent, rather than zero as under current law.

Congressional Record H3929 (May 22, 1998).

In order to conform part 583 to subparagraph (1)(C), we are proposing to amend the procedures for calculating U.S./Canadian parts content set forth in § 583.6 and the requirements for outside suppliers set forth in § 583.10.

We note that the proposed amendments would increase the costs of compliance with part 583 for some outside suppliers. The original AALA did not require outside suppliers to provide specific estimates of the U.S./Canada value added of their equipment. Instead, it only required them to indicate whether the U.S./Canada value added was at least 70 percent.[2] Under the amended AALA, however, outside suppliers which provide equipment with U.S./Canada value added of less than 70 percent are required to provide specific estimates (i.e., to the nearest five percent) of the U.S./Canada value added of their equipment.

Identification of Country of Assembly (Paragraph (2) of Section 7106(d))

Paragraph (2) amends section 32304(d) of the AALA to provide that a manufacturer's vehicle content label may include a line identifying the country in which the vehicle assembly was completed. We note, however, that section 32304(b)(1)(B) of the AALA already provides that the label must identify the final assembly place for the vehicle by city, State (where appropriate) and country. This requirement is reflected in § 583.5(b) of the current regulation.

Since, pursuant to another section of the AALA, Part 583 already requires the vehicle content label to state the country in which the vehicle assembly was completed, we believe that it is unnecessary to amend the regulation in light of paragraph (2).

U.S./Canadian Parts Content of a Vehicle Based on the Assembly Plant (Paragraph (3) of Section 7106(d))

Paragraph (3) amended the AALA to provide that a manufacturer's vehicle content label may display separately the domestic content of a vehicle based on the assembly plant. We note that, in enacting the original AALA, Congress decided that U.S./Canadian parts content should be calculated for groups of vehicles rather than for each individual vehicle. It also decided to adopt the concept of ''carline'' and its definition from the Corporate Average Fuel Economy Program, as the basis for determining the relevant groups of vehicles.

We also note that carline determinations are based on degree of commonality in construction, instead of commonality of assembly plant. Thus, it is possible that some vehicles in a carline may be manufactured at one assembly plant, while other vehicles in the same carline may be manufactured at another assembly plant, even one in another country.

If a carline is manufactured at more than one assembly plant, the U.S./Canadian content for the portion of the carline manufactured at one assembly plant may differ substantially from that for the portions manufactured at other assembly plants. Paragraph (3) permits a manufacturer to voluntarily display separately on the vehicle content label the U.S./Canadian parts content for the portion of the carline assembled at the plant where the vehicle was assembled. As noted by the Conference Report, this information would be reported in addition to the carline average percentage. Congressional Record H3929–30 (May 22, 1998).

We note that this provision appears to represent a variation of an option currently included in part 583 at § 583.5(e). That option applies to carlines consisting of vehicles some of which are assembled in the U.S./Canada

[2] NHTSA discussed in some detail the compliance burdens associated with the now superseded requirements for outside suppliers at 60 FR 47883–87 (September 15, 1995).

and others of which are assembled in one or more other countries. It permits manufacturers to voluntarily identify U.S./Canadian parts content for the portion of the carline assembled in the country in which the vehicle is actually assembled. If this information is provided, it must be included in an explanatory note at the end of the label.

In order to conform part 583 to paragraph (3), we are proposing to add to § 583.5 an additional option permitting manufacturers to voluntarily identify U.S./Canadian parts content based on the assembly plant in which the vehicle was assembled. The details of the option are generally patterned after the option included at § 583.5(e), which would be retained. We seek comment on whether § 583.5(e) will still be needed with this additional provision.

Outside Suppliers Failing To Report (Paragraph (4) of Section 7106(d)

For the past several years, we have provided a limited, temporary provision in the part 583 content calculation procedures to give a vehicle manufacturer added flexibility in making content determinations in those instances in which outside suppliers have not responded to the manufacturer's requests for content information.[3] This provision is set forth at § 583.6(c)(6). Paragraph (4) amended the AALA to codify this regulatory provision and make it permanent.

In order to conform part 583 to paragraph (4), we are proposing to remove the time limitation included in § 583.6(c)(6). We are also proposing conforming changes to make that section consistent with subparagraph (1)(C) of section 7106(d) which, as discussed above, changed the procedures for calculating the U.S./Canadian content of equipment supplied by outside suppliers.

Accounting for the Value of Small Parts (Paragraph (5) of Section 7106(d)

The original AALA excluded small parts such as nuts, bolts, clips, screws and pins from the definition of ''passenger motor vehicle equipment.'' This reduced the burdens associated with obtaining content information about these minor items. However, it also meant that they were not considered at all in determining parts content. Paragraph (5) amends the AALA to provide that the value of small parts is to be defaulted to the country of final assembly. In other words, these small parts are now considered to be passenger motor vehicle equipment and to represent value added in the country where final assembly takes place, regardless of actual country of origin of those small parts.

In order to conform part 583 to paragraph (5), we are proposing to amend the definition of passenger motor vehicle equipment set forth at § 583.4(b) and the calculation procedures set forth at § 583.6 and § 583.7.

Other Changes to the Label

We are proposing a change in the format of the label to make it easier to understand. Part 583 currently requires a brief explanatory note concerning parts content to be provided at the end of the label. We are proposing to move this note to the middle of the label, directly below the items of information for which the note is relevant, i.e., below the specified U.S./Canadian Parts Content and Major Sources of Foreign Parts Content. We request comments on whether any other changes to the label, e.g., wording changes or format changes, are appropriate in light of the amendments to the AALA.

Effective Date

The NHTSA Reauthorization Act was signed by the President on June 9, 1998. While the provisions amending the AALA changed the existing labeling requirement and content calculation procedures, they did not specify when those changes are to become effective for vehicle manufacturers and suppliers.

Given the leadtime needed to change labels and make calculations based on the new calculation procedures, it would not have been possible for the vehicle manufacturers to comply with the new requirements for their model year 1999 vehicles. However, we believe that manufacturers can comply with the new requirements with respect to all model year 2000 vehicles, with the possible exception of those introduced during the early part of 1999. Since the changes are relatively straightforward and leave us little discretion, the vehicle manufacturers can implement the changes needed to comply with the new requirements. They need not await the final rule to do so.

Accordingly, we are proposing to apply the new requirements to all model year 2000 carlines that are first offered for sale to ultimate purchasers on or after June 1, 1999. This would affect the vast majority of model year 2000 carlines, since most will be introduced in the fall of 1999. For model year 2000 carlines that are first offered for sale before June 1, 1999, manufacturers would have the option of following the new requirements or the old ones.

Rulemaking Analyses and Notices

A. Executive Order 12866 and DOT Regulatory Policies and Procedures

We have considered the impact of this rulemaking action under Executive Order 12866 and the Department of Transportation's regulatory policies and procedures. This rulemaking document was not reviewed by the Office of Management and Budget under E.O. 12866, ''Regulatory Planning and Review.'' The rulemaking action has been determined not to be significant under the Department's regulatory policies and procedures.

This document proposes to amend 49 CFR Part 583 to conform the agency's content labeling requirements and calculation procedures to recent statutory changes. The changes are so minor that they would not have any measurable effect on vehicle prices.

The change most likely to result in cost impacts is the one requiring outside suppliers to make calculations of U.S./Canadian content, to the nearest five percent, for equipment with U.S./Canadian content below 70 percent. This will increase compliance costs for some outside suppliers. The agency notes that there are about 15,000 suppliers to vehicle manufacturers. However, many small suppliers procure all their inputs from the same country, and will experience negligible costs. NHTSA believes that cost impacts for other suppliers will be small and will diminish over time. Somewhat higher costs are likely to be experienced the first year as suppliers become familiar with the new calculation procedures and incorporate them into their programming or other systems.

While the agency believes that the cost impacts will be small, it does not have sufficient information to quantify such costs. Comments are requested concerning this issue. Because the economic impacts of this proposal are so minimal, preparation of a full regulatory evaluation is not necessary.

B. Regulatory Flexibility Act

We have considered the effects of this rulemaking action under the Regulatory Flexibility Act (5 U.S.C. 601 *et seq.*) I hereby certify that the proposed amendment would not have a significant economic impact on a substantial number of small entities. Therefore, a regulatory flexibility analysis is not required for this action. Although certain small businesses, such as parts suppliers and some vehicle manufacturers, are affected by the regulation, the effect on them is minor. The requirements are strictly

[3] For an explanation of this provision, see 62 FR 33756 (June 23, 1997).

informational and, as discussed above, cost impacts small.

C. National Environmental Policy Act

We have analyzed this proposed amendment for the purposes of the National Environmental Policy Act and determined that it would not have any significant impact on the quality of the human environment.

D. Executive Order 12612 (Federalism)

We have analyzed this proposed amendment in accordance with the principles and criteria set forth in Executive Order 12612. We have determined that the proposed amendment does not have sufficient federalism implications to warrant the preparation of a Federalism Assessment.

E. Paperwork Reduction Act

Information collection requirements proposed in this notice differ from those approved by the Office of Management and Budget under the provisions of the Paperwork Reduction Act (Pub. L. 96–511) and assigned OMB Control Number 2127–0573. The current approval will expire on June 30, 2001. Since NHTSA believes that the changes proposed in this notice will result in a small increase in the paperwork burden of this reporting requirement, if the changes proposed in this NPRM are made final, NHTSA will ask OMB for approval to amend OMB Control Number 2127–0573 to account for any additional information collection burdens imposed on the public.

Request for Comments

We invite interested persons to submit comments on this proposal. Two copies should be submitted.

All comments must not exceed 15 pages in length (49 CFR 553.21). Necessary attachments may be appended to these submissions without regard to the 15-page limit. This limitation is intended to encourage commenters to detail their primary arguments in a concise fashion.

If a commenter wishes to submit certain information under a claim of confidentiality, three copies of the complete submission, including purportedly confidential business information, should be submitted to the Chief Counsel, NHTSA, at the street address given above, and two copies from which the purportedly confidential information has been deleted should be submitted to the Docket Section. A request for confidentiality should be accompanied by a cover letter setting forth the information specified in the agency's confidential business information regulation. 49 CFR part 512.

We will consider all comments received before the close of business on the comment closing date indicated above. The comments will be available for examination in the docket at the above address both before and after that date. To the extent possible, we will consider comments filed after the closing date. We will consider comments received too late for consideration in regard to this action as suggestions for further rulemaking action. Comments will be available for inspection in the docket. We will continue to file relevant information as it becomes available in the docket after the closing date, and recommend that interested persons continue to examine the docket for new material.

Those persons desiring to be notified upon receipt of their comments in the rules docket should enclose a self-addressed, stamped postcard in the envelope with their comments. Upon receiving the comments, the docket supervisor will return the postcard by mail.

List of Subjects in 49 CFR Part 583

Imports, Labeling, Motor vehicles, Reporting and recordkeeping requirements.

In consideration of the foregoing, we propose to amend 49 CFR part 583 as follows:

PART 583—AUTOMOBILE PARTS CONTENT LABELING

1. The authority citation for part 583 would continue to read as follows:

Authority: 49 U.S.C. 32304, 40 CFR 1.50, 501.2(f).

2. Section 583.4 would be amended by revising paragraph (b)(7) to read as follows:

§ 583.4 Definitions.

* * * * *

(b) * * *

(7) *Passenger motor vehicle equipment* means any system, subassembly, or component received at the final assembly point for installation on, or attachment to, such vehicle at the time of its initial shipment by the manufacturer to a dealer for sale to an ultimate purchaser. Passenger motor vehicle equipment also includes any system, subassembly, or component received by an allied supplier from an outside supplier for incorporation into equipment supplied by the allied supplier to the manufacturer with which it is allied.

* * * * *

3. Section 583.5 would be amended by revising paragraph (a)(4), (a)(5), (b), and (i) to read as follows:

§ 583.5 Label requirements.

(a) * * *

(4) *Country of origin for the engine.* The country of origin of the passenger motor vehicle's engine (the procedure for making this country of origin determination is set forth in § 583.8);

(5) *Country of origin for the transmission.* The country of origin of the passenger motor vehicle's transmission (the procedure for making this country of origin determination is set forth in § 583.8);

* * * * *

(b) Except as provided in paragraphs (e), (f) and (g) of this section, the label required under paragraph (a) of this section shall read as follows, with the specified information inserted in the places indicated (except that if there are no major sources of foreign parts content, omit the section ''Major Sources of Foreign Parts Content''):

Parts Content Information

For vehicles in this carline:
U.S./Canadian Parts Content: (insert number) %
Major Sources of Foreign Parts Content:
(name of country with highest percentage): (insert number) %
(name of country with second highest percentage): (insert number) %

Note: Parts content does not include final assembly, distribution, or other non-parts costs.

For this vehicle:
Final Assembly Point: (city, state, country)
Country of Origin:
Engine: (name of country)
Transmission: (name of country)

* * * * *

(i) *Carlines assembled in more than one assembly plant.* (1) If a carline is assembled in more than one assembly plant, the manufacturer may, at its option, add the following additional information at the end of the explanatory note specified in paragraph (a)(6) of this section, with the specified information inserted in the places indicated:

Two or more assembly plants produce the vehicles in this carline. The vehicles assembled at the plant where this vehicle was assembled have a U.S./Canadian parts content of [__]%.

(2) A manufacturer selecting this option shall divide the carline for purposes of this additional information into portions representing each assembly plant.

(3) A manufacturer selecting this option for a particular carline shall provide the specified additional information on the labels of all vehicles within the carline.

4. Section 583.6 would be amended by revising paragraphs (a), (c)(1)(ii), (c)(3)(ii), and (c)(6) to read as follows:

§ 583.6 Procedure for determining U.S./Canadian parts content.

(a) Each manufacturer, except as specified in § 583.5(f) and (g), shall determine the percentage U.S./Canadian Parts Content for each carline on a model year basis. This determination shall be made before the beginning of each model year. Items of equipment produced at the final assembly point (but not as part of final assembly) are treated in the same manner as if they were supplied by an allied supplier. All value otherwise added at the final assembly point and beyond, including all final assembly costs, is excluded from the calculation of U.S./Canadian parts content. The country of origin of nuts, bolts, clips, screws, pins, braces, gasoline, oil, blackout, phosphate rinse, windshield washer fluid, fasteners, tire assembly fluid, rivets, adhesives, grommets, and wheel weights, used in final assembly of the vehicle, is considered to be the country where final assembly of the vehicle takes place.

* * * * *

(c) * * *

(1) * * *

(ii) To otherwise have the actual percent of its value added in the United States and/or Canada, rounded to the nearest five percent.

* * * * *

(3) * * *

(ii) To otherwise have the actual percent of its value added in the United States and/or Canada, rounded to the nearest five percent.

* * * * *

(6) If a manufacturer or allied supplier requests information in a timely manner from one or more of its outside suppliers concerning the U.S./Canadian content of particular equipment, but does not receive that information despite a good faith effort to obtain it, the manufacturer or allied supplier may make its own good faith value added determinations, subject to the following provisions:

(i) The manufacturer or allied supplier shall make the same value added determinations as would be made by the outside supplier;

(ii) The manufacturer or allied supplier shall consider the amount of value added and the location in which the value was added for all of the stages that the outside supplier would be required to consider;

(iii) The manufacturer or allied supplier may determine that particular value is added in the United States and/or Canada only if it has a good faith basis to make that determination;

(iv) A manufacturer and its allied suppliers may, on a combined basis, make value added determinations for no more than 10 percent, by value, of a carline's total parts content from outside suppliers;

(v) Value added determinations made by a manufacturer or allied supplier under this paragraph shall have the same effect as if they were made by the outside supplier;

(vi) This provision does not affect the obligation of outside suppliers to provide the requested information.

* * * * *

5. Section 583.7 would be amended by revising paragraph (a) to read as follows:

§ 583.7 Procedure for determining major foreign sources of passenger motor vehicle equipment.

(a) Each manufacturer, except as specified in § 583.5(f) and (g), shall determine the countries, if any, which are major foreign sources of passenger motor vehicle equipment and the percentages attributable to each such country for each carline on a model year basis, before the beginning of each model year. The manufacturer need only determine this information for the two such countries with the highest percentages. Items of equipment produced at the final assembly point (but not as part of final assembly) are treated in the same manner as if they were supplied by an allied supplier. In making determinations under this section, the U.S. and Canada are treated together as if they were one (non-foreign) country. The country of origin of nuts, bolts, clips, screws, pins, braces, gasoline, oil, blackout, phosphate rinse, windshield washer fluid, fasteners, tire assembly fluid, rivets, adhesives, grommets, and wheel weights, used in final assembly of the vehicle, is considered to be the country where final assembly of the vehicle takes place.

* * * * *

6. Section 583.8 would be amended by revising paragraphs (b) and (d) to read as follows:

§ 583.8 Procedure for determining country of origin for engines and transmissions (for purposes of determining the information specified by §§ 583.5(a)(4) and 583.5(a)(5) only).

* * * * *

(b) The value of an engine or transmission is determined by first adding the prices paid by the manufacturer of the engine/transmission for each component comprising the engine/transmission, as delivered to the assembly plant of the engine/transmission, and the fair market value of each individual part produced at the plant. The assembly and labor costs incurred for the final assembly of the engine/transmission are then added to determine the value of the engine or transmission.

* * * * *

(d) Determination of the total value of an engine/transmission which is attributable to individual countries. The value of an engine/transmission that is attributable to each country is determined by adding the total value of all of the components installed in that engine/transmission which originated in that country. For the country where final assembly of the engine/transmission takes place, the assembly and labor costs incurred for such final assembly are also added.

* * * * *

7. Section 583.10 would be amended by revising paragraph (a)(5) to read as follows:

§ 583.10 Outside suppliers of passenger motor vehicle equipment.

(a) * * *

(5) For equipment which has less than 70 percent of its value added in the United States and Canada,

(i) The country of origin of the equipment, determined under § 583.7(c); and

(ii) The percent of its value added in the United States and Canada, to the nearest 5 percent, determined under § 583.6(c).

* * * * *

Issued on: January 29, 1999.

L. Robert Shelton,

Associate Administrator for Safety Performance Standards.

[FR Doc. 99–2970 Filed 2–5–99; 8:45 am]

BILLING CODE 4910–59–P

DEPARTMENT OF COMMERCE

National Oceanic and Atmospheric Administration

50 CFR Part 679

[Docket No. 981221311–8311–01; I.D. 113098C]

RIN 0648-AL21

Fisheries of the Exclusive Economic Zone Off Alaska; Western Alaska Community Development Quota Program

AGENCY: National Marine Fisheries Service (NMFS), National Oceanic and Atmospheric Administration (NOAA), Commerce.

ACTION: Proposed rule; request for comments.

SUMMARY: NMFS proposes amendments to the regulations governing the Western Alaska Community Development Quota (CDQ) Program. The proposed amendments would define how halibut CDQ fishing would be managed in 1999 and thereafter; remove or revise regulations governing groundfish and halibut CDQ fishing consistent with the combination of the management regimes for the fixed gear halibut and sablefish CDQ fisheries, the pollock CDQ fisheries, and the multispecies (MS) groundfish CDQ fisheries starting in fishing year 1999; and make miscellaneous technical and editorial revisions. This proposed action is intended to further the objectives of the Fishery Management Plan for the Groundfish Fishery of the Bering Sea and Aleutian Islands Area (FMP).

DATES: Comments must be received at the following address by March 10, 1999.

ADDRESSES: Comments should be sent to Sue Salveson, Assistant Regional Administrator, Sustainable Fisheries Division, Alaska Region, NMFS, P.O. Box 21668, Juneau, AK 99802, Attn: Lori Gravel, or delivered to the Federal Building, 709 West 9th Street, Juneau, AK. Copies of the Environmental Assessment/Regulatory Impact Review/Initial Regulatory Flexibility Analysis (EA/RIR/IRFA) prepared for this action may be obtained from the same address or by calling the Alaska Region, NMFS, at 907–586–7228. Send comments on collection-of-information requirements to the above address and to the Office of Information and Regulatory Affairs (OIRA), Office of Management and Budget (OMB), Washington, DC 20503 (Attn: NOAA Desk Officer).

FOR FURTHER INFORMATION CONTACT: Sally Bibb, 907–586–7228.

SUPPLEMENTARY INFORMATION:

Management Background and Need for Action

NMFS manages fishing for groundfish by U.S. vessels in the exclusive economic zone of the Bering Sea and Aleutian Islands management area (BSAI) according to the FMP. The North Pacific Fishery Management Council (Council) prepared the FMP under authority of the Magnuson-Stevens Fishery Conservation and Management Act (Magnuson-Stevens Act). Regulations governing fishing by U.S. vessels and implementing the FMP appear at 50 CFR parts 600 and 679.

For the 1998 fishing year, four separate CDQ fisheries existed under current regulations: (1) The fixed gear halibut and sablefish CDQ fisheries; (2) the pollock CDQ fisheries; (3) the multispecies (MS) groundfish CDQ fisheries; and (4) the crab CDQ fisheries.

NMFS published a final rule implementing the administrative and catch monitoring requirements for the MS groundfish CDQ fisheries under Amendment 39 to the BSAI FMP in the **Federal Register** on June 4, 1998 (63 FR 30381). That rule establishes a single management program for the fixed gear sablefish CDQ fisheries, the pollock CDQ fisheries, and the MS groundfish CDQ starting in 1999. Regulatory amendments are necessary to remove or revise sections of the regulations that govern the separate CDQ fisheries in 1998, and to further define how the halibut CDQ fisheries will be managed in 1999 and thereafter. The crab CDQ fisheries will continue to be managed as separate CDQ fisheries by the State of Alaska.

The proposed regulatory amendments fall into three categories: (1) Those governing vessels used to harvest halibut CDQ and the processors or registered buyers taking deliveries from these vessels; (2) those removing or revising sections of the regulations governing the fixed gear sablefish CDQ fishery in 1998; and (3) those executing other miscellaneous technical or editorial revisions to the MS groundfish CDQ regulations.

Management of the Halibut CDQ Fisheries

NMFS established the fixed gear halibut and sablefish CDQ fisheries with the fixed gear halibut and sablefish Individual Fishing Quota (IFQ) Program. The IFQ regulations provide for the reporting of halibut and sablefish CDQ caught with fixed gear through the end of 1998. As the recipients of annual allocations, CDQ groups were required to obtain a CDQ permit from NMFS. Each individual who landed fixed gear halibut or sablefish CDQ was required to have a NMFS-issued CDQ card and to telephone NMFS to provide 6 hours prior notice of landing. Registered buyers were required to report CDQ landings to NMFS using the electronic reporting system and transaction terminals.

In the proposed rule to implement Amendment 39 to the FMP, NMFS proposed to consolidate all of the CDQ fisheries under one set of monitoring and catch accounting regulations to implement the Council's and NMFS's intent that all catch in the groundfish and halibut CDQ fisheries be accounted for by CDQ allocations (62 FR 43865, August 15, 1997). Although NMFS proposed different observer coverage, equipment, and reporting requirements for different size and gear type vessels, no distinction was made between the requirements for vessels of the same size fishing in the halibut CDQ fisheries versus fishing in the groundfish CDQ fisheries.

Public comment on the proposed rule stated that the proposed regulations combining vessels and processors participating in the groundfish and halibut CDQ fisheries under one set of regulations were burdensome for participants in the halibut CDQ fishery, did not consider the differences between the groundfish fisheries and the halibut fisheries, and had information collection requirements not worth the additional effort and cost to the CDQ participants or NMFS. Specifically, requirements for CDQ observers in shoreside processors taking deliveries of halibut CDQ, retention and delivery of all groundfish CDQ species by small vessels, CDQ check-in/check-out reports for all vessels, and weekly summaries of the catch by all vessels were not considered necessary for the halibut CDQ fisheries.

Due to the large number of persuasive public comments that halibut CDQ fisheries are inherently different from other CDQ fisheries, NMFS did not implement many of the MS CDQ requirements for the halibut CDQ fisheries in the final rule. NMFS agreed that differences exist between the small vessel halibut CDQ fisheries and the other groundfish CDQ fisheries, including fixed gear sablefish. In 1997, 1,884,000 lb (854 mt) of halibut CDQ was allocated to six CDQ groups. At least 75 percent of the 1997 catch was landed by small boats and skiffs under 32 ft (9.73 m) length overall (LOA) at about 10 small shoreside processors or at buying stations in Western Alaska villages. These processors did not submit other landing reports to NMFS and were not required to have observer coverage. In contrast, NMFS expects that most of the groundfish CDQ will be harvested by catcher/processors or large catcher vessels delivering to groundfish shoreside processing plants located in relatively large ports.

Based on the public comment on the proposed rule, and on recommendations made by the Council at its October 1998 meeting, NMFS is proposing the following revisions for management of halibut CDQ in 1999 and thereafter:

A. Remove the definition of ''fixed gear sablefish and halibut CDQ fishing.''

B. Add a new definition for ''halibut CDQ fishing'' to mean fishing that results in the landing of halibut CDQ in a delivery by a catcher vessel or a set by

a catcher/processor in which the following conditions are met:

(1) Retained halibut CDQ represents the largest proportion of the catch by weight, and

(2) The weight of other retained groundfish does not exceed the maximum retainable bycatch amounts for each groundfish species or species group.

C. Remove the requirement at § 679.30(a)(5) to list in the Community Development Plan (CDP), halibut CDQ cardholders, vessels less than 60 ft (18.3 m) LOA that land groundfish harvested while halibut CDQ fishing, and processors or registered buyers who purchase halibut CDQ or groundfish harvested while halibut CDQ fishing from vessels less than 60 ft (18.3 m) LOA. Listing these entities in the CDP is not necessary because this information is available from the Restricted Access Management Division.

D. Revise the prohibition at § 679.7(d)(11) to clarify that catcher vessels less than 60 ft (18.3 m) LOA are not prohibited from discarding groundfish while halibut CDQ fishing, unless they are required to retain these fish under improved retention/utilization requirements. NMFS notes that § 679.7(f)(8), prohibits discarding Pacific cod and rockfish while IFQ halibut or IFQ sablefish are onboard, but does not prohibit this discard when CDQ halibut or CDQ sablefish are onboard.

E. Maintain a separate paragraph (f) in § 679.32 for halibut CDQ fishing that would:

(1) Require that the IFQ regulations would continue to govern the permitting, harvesting and landing of halibut CDQ.

(2) Require vessels harvesting halibut CDQ while groundfish CDQ fishing, as defined at § 679.2, to comply with all requirements for the MS groundfish CDQ fisheries with respect to their catch of groundfish CDQ.

(3) Require the shoreside processor to report on the CDQ delivery report and the CDQ group to report on the CDQ catch report, all groundfish CDQ harvested by vessels equal to or greater than 60 ft (18.3 m) LOA while halibut CDQ fishing. This groundfish CDQ would be subtracted from the CDQ groups' CDQ amounts for these species.

Shoreside processors would be required to report all groundfish, landed by vessels halibut CDQ fishing, to NMFS on logbooks and weekly production reports. They also would be required to report these landings to the State of Alaska on fish tickets. However, groundfish retained by catcher vessels less than 60 ft (18.3 m) LOA that are halibut CDQ fishing would not accrue against the CDQ groups' groundfish CDQs. Accounting for this incidental groundfish catch under the MS groundfish CDQs would require that shoreside processors or registered buyers taking deliveries of incidentally caught groundfish with a halibut CDQ delivery, fill out the IFQ/CDQ landings report (for the halibut CDQ) and a CDQ delivery report (for the groundfish CDQ). NMFS believes that the cost of requiring the submission of CDQ delivery reports from deliveries by catcher vessels less than 60 ft (18.3 m) LOA, to both the industry and NMFS, would exceed the benefits that would be gained by tracking what is expected to be small amounts of retained groundfish. In addition, allowing this incidental catch of groundfish to accrue against the non-CDQ total allowable catch (TAC) specifications is not expected to reduce the non-CDQ directed fisheries for the bycatch species.

F. Shoreside processors taking deliveries from catcher vessels less than 60 ft (18.3 m) LOA that met the definition of halibut CDQ fishing would not be required to have a CDQ observer to monitor those halibut CDQ deliveries. However, these shoreside processors would be required to comply with the general groundfish observer coverage requirements in § 679.50 that apply to all shoreside processors with a Federal processor permit.

This action proposes catch accounting regulations for operators of vessels less than 60 ft (18.3 m) LOA and halibut CDQ fishing, that are distinct from the catch accounting regulations for the same vessels if they are groundfish CDQ fishing. Specifically, if these vessel operators are halibut CDQ fishing they would not be required to retain all groundfish and deliver it to a shoreside processor, and their groundfish bycatch would not accrue against the groundfish CDQs. Shoreside processors taking deliveries from these vessels would not be required to have CDQ observers to monitor CDQ deliveries.

Under this proposed rule, the same catch accounting requirements would apply to operators of catcher vessels equal to or greater than 60 ft (18.3 m) LOA and catcher/processors while halibut CDQ fishing as would apply to the operators of the same vessels while groundfish CDQ fishing. This would include the accrual of all groundfish CDQ catch against the CDQ group's groundfish CDQ allocations, and the requirement to carry CDQ observers (one for catcher vessels and two for catcher/processors) in order to monitor and verify their catch of groundfish CDQ species that accrue to the MS groundfish CDQs. In addition, catcher vessels equal to or greater than 60 ft (18.3 m) LOA would be required to notify NMFS in the CDP whether they were going to (1) retain and deliver all groundfish CDQ species to a shoreside processor (Option 1 under § 679.32(c)(2)(ii)(A)), or (2) discard some groundfish CDQ species at sea (Option 2 under § 679.32(c)(2)(ii)(B)), in which case the owner or operator of the catcher vessel must provide an observer sampling station that complies with the requirements of § 679.28(d). Finally, shoreside processors would be required to have deliveries by catcher vessels equal to or greater than 60 ft (18.3 m) LOA monitored by a CDQ observer at the shoreside processor.

The proposed rule would revise § 679.32(a) and (c) to require vessels equal to or greater than 60 ft (18.3 m) LOA that are halibut CDQ fishing to comply with requirements necessary to account for their bycatch of groundfish CDQ.

Management of the Sablefish CDQ Fisheries in 1999 and Thereafter

No significant changes are proposed to the regulations for management of the catch of sablefish CDQ using fixed gear. However, NMFS is proposing to remove regulations that expired on December 31, 1998, and to add a prohibition against discarding sablefish caught with fixed gear (discussed below under Proposed Technical and Editorial Revisions).

The following description of the management of the sablefish CDQ fisheries in 1999 and thereafter is presented for clarification for CDQ groups, vessel operators, and processors who will be making a transition from the fixed gear halibut and sablefish CDQ fisheries managed under the IFQ regulations in 1998.

Under the final rule implementing Amendment 39 to the FMP (63 FR 30381, June 4, 1998), all operators of vessels harvesting sablefish CDQ and all processors taking deliveries of sablefish CDQ after December 31, 1998, are required to comply with the MS groundfish CDQ requirements in § 679.32. Sablefish CDQ will no longer be reported under the IFQ program requirements. CDQ groups will no longer be required to obtain sablefish CDQ permits, and individuals will no longer be required to obtain sablefish CDQ cards to harvest sablefish CDQ or to deliver sablefish CDQ to registered buyers. No prior notice of landings, or landings report will be submitted to NMFS. There will no longer be a requirement to report sablefish CDQ on

Shipment Reports. Vessels harvesting sablefish CDQ will be required to carry CDQ observers if they are catcher/processors or catcher vessels equal to or greater than 60 ft (18.3 m) LOA. Shoreside processors will be required to have deliveries from vessels groundfish CDQ fishing observed by a CDQ observer. All groundfish CDQ catch, including sablefish CDQ, must be reported on the CDQ delivery report and CDQ catch report and will accrue against a CDQ group's allocation. Estimates based on observer data will be used to determine the catch of all CDQ and prohibited species quota (PSQ) species (including sablefish CDQ) on all catcher/processors and on any catcher vessel using non-trawl gear and electing to discard groundfish CDQ species at sea (see § 679.32(d)(2)(iv)(B), Option 2).

Two sablefish CDQ reserves currently exist. The ''fixed gear sablefish CDQ reserve'', established in 1995 under Amendment 15 to the FMP, consists of 20 percent of the fixed gear allocation of the sablefish TAC (see § 679.20(b)(1)(iii)(B)) and may be harvested only with fixed gear. With implementation of the MS groundfish CDQ reserves in 1998, 7.5 percent of the trawl allocation of the sablefish TAC also was allocated to the CDQ program as the ''sablefish CDQ reserve''; however, no gear restriction was implemented for this CDQ reserve. Therefore, while only fixed gear may be used to harvest the fixed gear sablefish CDQ reserve, any legal gear may be used to harvest the sablefish CDQ reserve.

Current regulations at § 679.23(e)(3) specify that fishing for halibut and sablefish CDQ with fixed gear may occur only during the IFQ fishing season, which in 1998, was between March 15 and November 15. This requirement was implemented under the fixed gear halibut and sablefish IFQ and CDQ programs, and no changes to these seasons were implemented under the MS groundfish CDQ program or are proposed to be implemented in this proposed rule.

Between January 1 and the start of the IFQ fishing season, and between the end of the IFQ fishing season and December 31, sablefish CDQ may be retained, but the retained catch weight of sablefish CDQ must not exceed the maximum retainable bycatch amounts specified under § 679.20(d)(1)(iii). In addition, under current regulations governing the annual establishment of groundfish specifications, no sablefish is allocated to the fixed gear sablefish CDQ reserve until the BSAI specifications are final. Therefore, under current regulations, any sablefish harvested with fixed gear prior to the date the BSAI groundfish specifications become final will accrue against the sablefish CDQ reserve (non-gear specific reserve). After the BSAI specifications become final, any catch of sablefish with fixed gear first accrues against the CDQ group's fixed gear sablefish reserve. Once the fixed gear sablefish CDQ reserve has been harvested, any catch of sablefish CDQ with fixed gear will accrue against the non-gear specific sablefish CDQ reserve. Catch of sablefish CDQ with trawl gear will accrue only to the non-gear specific sablefish CDQ reserve.

Fishing IFQ and CDQ Together

NMFS proposes to revise § 679.7(d)(15) to remove the prohibition against catching IFQ and CDQ species together in the same set. NMFS has revised observer data collection forms and procedures to allow the harvest of IFQ and CDQ together in the same set. Therefore, this prohibition is no longer necessary. This proposed rule would require that IFQ species and halibut CDQ be reported to NMFS under the IFQ regulations, as discussed in a previous section.

Other Proposed Technical and Editorial Revisions

In addition to the regulatory amendments discussed in the preceeding text, the proposed rule would also:

A. Correct a cross reference error in the definition of ''Prohibited species quota PSQ''.

B. Remove the reference in § 679.7(d)(4) to ''halibut CDQ'' so that vessels less than 60 ft (18.3 m) LOA harvesting only halibut CDQ are not required to be listed in the CDP.

C. Clarify that the prohibition at § 679.7(d)(11) against discarding groundfish CDQ species applies only to vessels groundfish CDQ fishing and not to vessels halibut CDQ fishing.

D. Consolidate the prohibitions at § 679.7(d)(19) and (d)(20) addressing requirements for catcher/processors using trawl gear and motherships to weigh total catch and to conduct daily tests of the scale used to weigh catch at sea.

E. Remove the prohibition at § 679.7(d)(22), which addresses the use of certified bins in the pollock CDQ fisheries. This prohibition is not necessary in 1999 and thereafter because all catcher/processors and motherships harvesting pollock CDQ will be required to weigh all CDQ catch on a scale. Volumetric estimates made by observers using certified bins will no longer be allowed.

F. Remove the prohibition in paragraph § 679.7(d)(26), which addresses legal gear for halibut, because this prohibition is redundant. Regulations issued by the International Pacific Halibut Commission define legal gear for halibut fishing.

G. Add a prohibition at newly redesignated § 679.7(d)(24) against discarding sablefish CDQ harvested with fixed gear. This prohibition is required under the FMP for both IFQ and CDQ sablefish, but had not been previously included in the CDQ prohibitions.

H. Revise § 679.7(f), the prohibitions for the IFQ fisheries, to clarify which of these prohibitions also apply to halibut CDQ. NMFS is proposing to require that the prohibitions in paragraphs (f)(3), (f)(5), (f)(6), and (f)(10) apply to halibut CDQ as well as to halibut and sablefish IFQ. This proposed rule would revise paragraph (f)(3) to clarify that sablefish CDQ may be retained without an IFQ or CDQ permit or card by vessels fishing for a CDQ group with available sablefish CDQ.

I. Correct a cross reference error in § 679.21(e)(2)(ii).

J. Correct a paragraph numbering error in § 679.23(e)(3). The final rule published on June 4, 1998 (63 FR 30381), added paragraph (e)(3)(iv); however, there is no paragraph (e)(3)(iii), so the paragraph (e)(3)(iv) would be redesignated as paragraph (e)(3)(iii). In addition, a portion of the last sentence of this paragraph that addressed the season starting date for the 1998 MS groundfish fisheries would be removed.

K. Correct an error in § 679.30(a)(5)(i)(A)(*2*)(*ii*) by removing pots as a gear that is included under ''hook-and-line'' gear.

L. Remove § 679.31(d)(3) that referenced the 1998 crab CDQ reserve allocation that states ''(3) For calendar year 1998 (applicable through December 31, 1998), 3.5 percent''.

M. Remove § 679.31(f) that provided the authority to reallocate CDQ and PSQ in 1998. This paragraph expired on December 31, 1998.

N. In § 679.32, remove paragraphs (a)(2) and (a)(3) which expired on December 31, 1998.

Classification

This proposed rule contains collection-of-information requirements subject to the Paperwork Reduction Act (PRA). OMB approved the proposed collection of information about halibut CDQ (50 CFR 679.32(e)) under OMB control number 0648–0272 (the halibut and sablefish IFQ program).

OMB has approved the collection of information associated with the Community Development Plans (50 CFR

§ 679.30) under OMB control numbers 0648–0269. This proposed rule would reduce some of the approved requirements for vessels less than 60 ft LOA while halibut CDQ fishing and for shoreside processors taking deliveries from these vessels.

Additions to the collection of information approved under OMB control number 0648–0269 (the CDQ program) that would be made by this rulemaking have been submitted to OMB for review and approval. No new forms are proposed with this rulemaking.

This proposed rule would require vessels equal to or greater than 60 ft (18.3 m) LOA to comply with the reporting requirements for the groundfish CDQ program while they are halibut CDQ fishing. The only new information collection that would apply to the owners or operators of the catcher vessels would be the requirement to provide an observer sampling station if they elected in their CDP to discard groundfish CDQ species at sea. Shoreside processors taking deliveries of groundfish CDQ from catcher vessels equal to or greater than 60 ft (18.3 m) LOA that had been halibut CDQ fishing would be required to notify the CDQ observer in the plant prior to delivery of CDQ groundfish, to print and retain the scale print-outs, and to report all groundfish CDQ in a CDQ delivery report. The CDQ group would be required to report any groundfish CDQ caught by vessels equal to or greater than 60 ft (18.3 m) LOA on a CDQ catch report.

Notwithstanding any other provision of law, no person is required to respond to nor shall a person be subject to a penalty for failure to comply with a collection of information subject to the requirements of the PRA unless that collection of information displays a currently valid OMB control number.

The estimated time for the owner of a catcher vessel to submit a request for an observer sampling station inspection and to maintain a copy of the observer sampling station inspection report on the vessel is 2 hours; the estimated time for the shoreside processor to print and retain the scale print-out is 15 minutes; the estimated time for the shoreside processor to notify the CDQ observer prior to the delivery of CDQ catch is 2 minutes; the estimated time for a shoreside processor to complete the CDQ delivery report is one hour; and the estimated time for the CDQ group to complete the CDQ catch report is 15 minutes.

The estimated response times include the time needed to review instructions, search existing data sources, gather and maintain the data needed, and complete and review the collection of information.

Public comment is sought regarding whether the proposed collection of information is necessary for the proper performance of the function of the agency, including whether the information has practical utility; the accuracy of the burden estimate; ways to enhance the quality, utility, and clarity of the information to be collected; and ways to minimize the burden of the collection of information, including the use of automated collection techniques or other forms of information technology.

Send comments regarding the burden estimates or any other aspect of this collection of information, including suggestions for reducing the burden, to NMFS and to OIRA, OMB (see **ADDRESSES**).

This proposed rule has been determined to be not significant for purposes of E.O. 12866.

NMFS prepared an IRFA that describes the impact this proposed rule, if adopted, would have on small entities. A copy of this analysis is available from NMFS (see **ADDRESSES**). The preamble to this proposed rule supplements that IRFA. The analysis made the following conclusions with respect to impacts on small entities.

All of the participants in the halibut CDQ fisheries are small entities, including the approximately 250 fishing vessel owners or operators who harvest halibut CDQ, the approximately 20 registered buyers who purchase halibut CDQ, the six CDQ groups who are allocated halibut CDQ, and the 56 western Alaska communities that are eligible for the CDQ program. All of these small entities incur some economic impact due to an increase in annual compliance costs as a result of recordkeeping and reporting requirements. For example, this proposed rule would require the CDQ groups to incur costs associated with obtaining CDQ permits and submitting the CDQ catch reports. It would also require vessel operators and registered buyers to incur costs associated with CDQ landings reports as well as the requirement that owners or operators of vessel equal to or greater than 60 ft (18.3 m) LOA incur costs associated with the requirement to carry a CDQ observer.

NMFS has determined that a regulation has a significant economic impact for the purposes of the Regulatory Flexibility Act (RFA) if it is likely to result in more than a 5–percent decrease in annual gross revenues; annual compliance costs (e.g., annualized capital, operating, reporting) that increase total costs of production by more than 5 percent; compliance costs as a percent of sales that are 10 or more percent higher for small entities than compliance costs for large entities; capital costs of compliance that represent a significant portion of capital available to small entities, considering internal cash flow and external financing capabilities; or is likely to result in 2 or more percent of the small entities affected being forced to cease business operations.

NMFS believes that the proposed action will not reach these thresholds. However, the agency does not currently have sufficient information about the operating and production costs of the potentially affected small entities. Therefore, NMFS determines that the preferred alternative may have a significant impact on a substantial number of small entities and has provided the requisite analytical information required for an IRFA.

NMFS considered the alternative of allowing current regulations to expire on December 31, 1998, which would result in no regulations governing the permitting, catching, recordkeeping, reporting, and monitoring of halibut CDQ catch. While this alternative may appear to minimize the economic impact of the proposed rule on small entities, it is not consistent with NMFS's fisheries management objectives and obligations under the Magnuson-Stevens Act and the North Pacific Halibut Act. Furthermore, it would not be supported by the fishing industry, the CDQ groups, the State of Alaska, or the International Pacific Halibut Commission, all of whom have an interest in the collection of catch data to manage the halibut CDQ fisheries.

The proposed rule would satisfy NMFS's fisheries management obligations in a manner consistent with the RFA by removing some requirements and compliance costs for small entities. Specifically, it would remove the requirement that the CDQ groups (1) list vessels less than 60 ft (18.3 m) LOA that conduct halibut CDQ fishing only, and the processors taking deliveries of CDQ only from these vessels in their CDPs, and (2) submit technical amendments to their CDPs to add or remove these vessels and processors. It would also remove the requirement for observers in shoreside processing plants that take deliveries from vessels less than 60 feet (18.3 m) LOA who have been halibut CDQ fishing.

The President has directed Federal agencies to use plain language in their communications with the public,

including regulations. To comply with that directive, we seek public comment on any ambiguity or unnecessary complexity arising from the language used in this proposed rule.

List of Subjects in 50 CFR Part 679

Alaska, Fisheries, Recordkeeping and reporting requirements.

Dated: February 1, 1999.

Andrew A. Rosenberg,

Deputy Assistant Administrator for Fisheries, National Marine Fisheries Service.

For the reasons set out in the preamble, 50 CFR part 679 is proposed to be amended as follows:

PART 679—FISHERIES OF THE EXCLUSIVE ECONOMIC ZONE OFF ALASKA

1. The authority citation for part 679 continues to read as follows:

Authority: 16 U.S.C. 773 *et seq.*, 1801 *et seq.* and 3631 *et seq.*

2. In § 679.2, the definition for ''Fixed gear sablefish and halibut CDQ fishing (applicable through December 31, 1998)'' is removed; the definition for ''Prohibited species quota (PSQ)'' is revised; and the definition for ''Halibut CDQ fishing'' is added in alphabetical order to read as follows:

§ 679.2 Definitions.

* * * * *

Halibut CDQ fishing means fishing that results in a delivery by a catcher vessel or a set by a catcher/processor in which the following conditions are met:

(1) Retained halibut CDQ represents the largest proportion of the retained catch in round weight equivalent, and

(2) The round weight equivalent of other retained groundfish does not exceed the maximum retainable bycatch amounts for these species or species groups as established in § 679.20(e) and (f).

* * * * *

Prohibited species quota (PSQ) means the amount of a prohibited species catch limit established under § 679.21(e)(1) and (e)(2) that is allocated to the groundfish CDQ program under § 679.21(e)(1)(i) and (e)(2)(ii).

* * * * *

3. In § 679.7, paragraphs (d)(4), (d)(11), (d)(15), (d)(19) through (d)(24), and paragraphs (f)(3), (f)(5), (f)(6), and (f)(10) are revised; paragraphs (d)(25) and (d)(26) are removed; paragraphs (d)(27) and (d)(28) are redesignated as (d)(25) and (d)(26) respectively.

§ 679.7 Prohibitions.

* * * * *

(d) * * *

(4) Harvest groundfish CDQ on behalf of a CDQ group with a vessel that is not listed as an eligible vessel on an approved CDP for that CDQ group.

* * * * *

(11) For the operator of a catcher vessel using trawl gear or any vessel less than 60 ft (18.3 m) LOA that is groundfish CDQ fishing as defined at § 679.2, discard any groundfish CDQ species or salmon PSQ before it is delivered to an eligible processor listed on an approved CDP.

* * * * *

(15) For the operator of a catcher/processor or a catcher vessel required to carry a CDQ observer, combine catch from two or more CDQ groups in the same haul or set.

* * * * *

(19) For the operator of a catcher/processor using trawl gear or a mothership, sort, process, or discard CDQ or PSQ species before the total catch is weighed on a scale that meets the requirements of § 679.28(b), including the daily test requirements described at § 679.28(b)(3).

(20) For the manager of a shoreside processor or the manager or operator of a buying station that is required elsewhere in this part to weigh catch on a scale approved by the State of Alaska under § 679.28(b), fail to weigh catch on a scale that meets the requirements of § 679.28(b).

(21) For a CDQ representative, use methods other than those approved in the CDP to determine the catch of CDQ and PSQ reported to NMFS on the CDQ catch report.

(22) For the operator of a vessel using trawl gear, harvest pollock CDQ in 1998 with trawl gear other than pelagic trawl gear.

(23) For a CDQ group, report catch of sablefish CDQ for accrual against the fixed gear sablefish CDQ reserve if that sablefish CDQ was caught with fishing gear other than fixed gear.

(24) For any person on a vessel using fixed gear that is fishing for a CDQ group with an allocation of fixed gear sablefish CDQ, discard sablefish harvested with fixed gear.

* * * * *

(f) * * *

(3)(i) *Halibut*. Retain halibut caught with fixed gear without a valid IFQ or CDQ permit and without an IFQ or CDQ card in the name of an individual aboard.

(ii) *Sablefish*. Retain sablefish caught with fixed gear without a valid IFQ permit and without an IFQ card in the name of an individual aboard, except as provided under an approved CDP.

* * * * *

(5) Possess, buy, sell, or transport IFQ or CDQ halibut or IFQ sablefish harvested or landed in violation of any provision of this part.

(6) Make a IFQ halibut, IFQ sablefish, or CDQ halibut landing without an IFQ or CDQ card in the name of the individual making the landing.

* * * * *

(10) Make an IFQ halibut, IFQ sablefish, or CDQ halibut landing other than directly to (or by) a registered buyer.

* * * * *

4. In § 679.21, paragraph (e)(2)(ii) is revised to read as follows.

§ 679.21 Prohibited species bycatch management.

* * * * *

(e) * * *

(2) * * *

(ii) The amount of 7.5 percent of the non-trawl gear halibut PSC limit set forth in paragraph (e)(2)(i) of this section is allocated to the groundfish CDQ program as PSQ reserve. The PSQ reserve is not apportioned by gear or fishery.

* * * * *

5. In § 679.23, paragraph (e)(4)(iii) is removed; and paragraph (e)(4)(iv) is revised to read as follows:

§ 679.23 Seasons.

* * * * *

(e) * * * * *

(4) * * *

(iii) *Groundfish CDQ*. Fishing for groundfish CDQ species, other than fixed gear sablefish CDQ under subpart C of this part, is authorized from 0001 hours, A.l.t., January 1, through the end of each fishing year, except as provided in paragraph (c) of this section.

* * * * *

6. In § 679.30, paragraph (a)(5)(i)(C) is removed, paragraphs (a)(5) introductory text, paragraphs (a)(5)(i)(A)(*1*), (a)(5)(i)(A)(*2*)(*ii*), (a)(5)(i)(B) are revised to read as follows:

§ 679.30 General CDQ regulations.

(a) * * *

(5) *Fishing plan for groundfish and halibut CDQ fisheries*. The following information must be provided for all vessels that will be groundfish CDQ fishing, all vessels equal to or greater than 60 ft (18.3 m) LOA that will be halibut CDQ fishing, and for all shoreside processors that will take delivery of any groundfish CDQ species from vessels that will be groundfish CDQ fishing or vessels equal to or greater than 60 ft (18.3 m) LOA that will be halibut CDQ fishing.

(i) *List of eligible vessels and processors*—(A) *Vessels*— (*1*)

Information required for all vessels. A list of the name, Federal fisheries permit number (if applicable), ADF&G vessel number, LOA, gear type, and vessel type (catcher vessel, catcher/processor, or mothership). For each vessel, report only the gear types and vessel types that will be used while CDQ fishing. Any CDQ vessel that is exempt from the moratorium under § 679.4(c)(3)(v) must be identified as such.

(*2*) * * *

(*ii*) Average and maximum number of hauls or sets that will be retrieved on any given fishing day while groundfish CDQ fishing.

* * * * *

(B) *Shoreside processors.* A list of the name, Federal processor permit number, and location of each shoreside processor that is required to have a Federal processor permit under § 679.4(f) and will take deliveries of, or process, groundfish CDQ catch from any vessel groundfish CDQ fishing or from vessels equal to or greater than 60 ft (18.3 m) LOA that are halibut CDQ fishing.

* * * * *

7. In § 679.31, paragraphs (d)(1) and (d)(2) are revised; paragraphs (d)(3) and (f) are removed, and paragraph (g) is redesignated as paragraph (f) as follows:

§ 679.31 CDQ reserves.

* * * * *

(d) * * *

(1) For calendar year 2000, and thereafter, 7.5 percent; and

(2) For calendar year 1999 (applicable through December 31, 1999), 5 percent.

* * * * *

8. In § 679.32, paragraphs (a), (c) introductory text, (c)(3)(i), (c)(3)(v), and (f) are revised to read as follows:

§ 679.32 Groundfish and halibut CDQ catch monitoring.

(a) *Applicability.* The CDQ group, the operator or manager of a buying station, the operator of a vessel groundfish CDQ fishing as defined at § 679.2, the operator of a vessels equal to or greater than 60 ft (18.3 m) LOA halibut CDQ fishing as defined at § 679.2, and the manager of a shoreside processor taking deliveries of groundfish CDQ from these vessels must comply with the requirements of paragraphs (b) through (d) of this section for all groundfish CDQ and PSQ, The CDQ group, the operator of a vessel harvesting halibut CDQ, the shoreside processor, and the registered buyer must comply with the requirements of paragraph (f). In addition, the CDQ group is responsible for ensuring that vessels and processors listed as eligible on the CDQ group's approved CDP comply with all requirements of this section while harvesting or processing CDQ species.

* * * * *

(c) *Requirements for vessels and processors.* In addition to complying with the minimum observer coverage requirements at § 679.50(c)(4), vessel operators and shoreside processors meeting the requirements of paragraph (a) of this section must comply with the following requirements:

* * * * *

(3) * * *

(i) *Prior notice to observer of offloading schedule.* Notify the CDQ observer of the offloading schedule of each CDQ delivery at least 1 hour prior to offloading to provide the CDQ observer an opportunity to monitor the sorting and weighing of the entire delivery.

* * * * *

(v) *CDQ delivery report.* Submit a CDQ delivery report described at § 679.5(n)(1) for each delivery of groundfish CDQ.

* * * * *

(f) *Halibut CDQ*—(1) *Applicability.* The CDQ group, the operator of a vessel harvesting halibut CDQ, the shoreside processor, and the registered buyer must comply with the requirements of this paragraph for halibut CDQ.

(2) *Accounting for halibut CDQ catch.* The CDQ group, vessel owner, registered buyer, and shoreside processor must comply with the following requirements for the catch of halibut CDQ.

(i) *Permits.* The CDQ group must obtain a halibut CDQ permit issued by the Regional Administrator. The vessel operator must have a copy of the halibut CDQ permit on any fishing vessel operated by, or for, a CDQ group that will have halibut CDQ onboard and must make the permit available for inspection by an authorized officer. The halibut CDQ permit is non-transferable and is issued annually until revoked, suspended, or modified.

(ii) *CDQ cards.* A person must have a valid halibut CDQ card issued by the Regional Administrator before landing any halibut CDQ. Each halibut CDQ card will identify a CDQ permit number and the person authorized by the CDQ group to land halibut for debit against the CDQ group's halibut CDQ.

(iii) *Alteration.* No person may alter, erase, mutilate, or forge a halibut CDQ permit, landing card, registered buyer permit, or any valid and current permit or document issued under this part. Any such permit, card, or document that has been intentionally altered, erased, mutilated, or forged is invalid.

(iv) *Landings.* A person may land halibut CDQ only if he or she has a valid halibut CDQ card, and that person may deliver halibut CDQ only to a person with a valid registered buyer permit. The person holding the halibut CDQ card and the registered buyer must comply with the requirements of § 679.5(l)(1) and (l)(2).

(v) The CDQ group, vessel owner or operator, and registered buyer must comply with all of the IFQ prohibitions at § 679.7(f).

(3) *Accounting for catch of groundfish CDQ while halibut CDQ fishing.* The shoreside processor must report on a CDQ delivery report described at § 679.5(n)(1), all groundfish CDQ landed from vessels equal to or greater than 60 ft (18.3 m) LOA while halibut CDQ fishing. The CDQ group must report on a CDQ catch report described at § 679.5(n)(2), all groundfish CDQ landed from vessels equal to or greater than 60 ft (18.3 m) LOA while halibut CDQ fishing. This groundfish CDQ will accrue to the CDQ group's groundfish CDQ allocations. The shoreside processor is not required to report on the CDQ delivery report and the CDQ group is not required to report on the CDQ catch report, groundfish caught by vessels less than 60 ft (18.3 m) LOA while halibut CDQ fishing, and this catch will not accrue against the CDQ group's groundfish CDQ allocations.

(4) *Groundfish CDQ retention requirements.* Operators of vessels less than 60 ft (18.3 m) LOA are not required to retain and deliver groundfish CDQ species while halibut CDQ fishing. Operators of vessels equal to or greater than 60 ft (18.3 m) LOA are required to comply with all groundfish CDQ and PSQ catch accounting requirements in paragraphs (b) through (d) of this section, including the retention of all groundfish CDQ, if option 1 under § 679.32(c)(2)(ii) is selected in the CDP.

(5) *Observer coverage requirements.* The owner or operator of a vessel equal to or greater than 60 ft (18.3 m) LOA halibut CDQ fishing as defined at § 679.2 or shoreside processors taking deliveries from vessels equal to or greater than 60 ft (18.3 m) LOA that are halibut CDQ fishing must comply with observer coverage requirements at § 679.50(c)(4) and (d)(4).

9. In § 679.50, paragraphs (c)(4) and (d)(4) are revised to read as follows

§ 679.50 Groundfish Observer Program applicable through December 31, 2000.

* * * * *

(c) * * *

(4) *Groundfish and halibut CDQ fisheries.* The owner or operator of a vessel groundfish CDQ fishing or

halibut CDQ fishing as defined at § 679.2 must comply with the following minimum observer coverage requirements each day that the vessel is used to harvest, transport, process, deliver, or take deliveries of CDQ or PSQ species. The time required for the CDQ observer to complete sampling, data recording, and data communication duties shall not exceed 12 hours in each 24–hour period and the CDQ observer is required to sample no more than 9 hours in each 24–hour period.

* * * * *

(d) * * *

(4) *Groundfish and halibut CDQ fisheries.* Each shoreside processor required to have a Federal processor permit under § 679.4(f) and taking deliveries of CDQ or PSQ from all vessels groundfish CDQ fishing as defined at § 679.2 or taking deliveries from vessels equal to or greater than 60 ft (18.3 m) LOA that are halibut CDQ fishing must have at least one lead CDQ observer as described at paragraph (h)(1)(i)(E) of this section present at all times while CDQ is being received or processed. The time required for the CDQ observer to complete sampling, data recording, and data communication duties shall not exceed 12 hours in each 24–hour period, and the CDQ observer is required to sample no more than 9 hours in each 24–hour period.

* * * * *

[FR Doc. 99–2796 Filed 2–5–99; 8:45 am]

BILLING CODE 3510–22–F

Notices

Federal Register
Vol. 64, No. 25
Monday, February 8, 1999

This section of the FEDERAL REGISTER contains documents other than rules or proposed rules that are applicable to the public. Notices of hearings and investigations, committee meetings, agency decisions and rulings, delegations of authority, filing of petitions and applications and agency statements of organization and functions are examples of documents appearing in this section.

DEPARTMENT OF AGRICULTURE

Agricultural Marketing Service

[S&T 99002]

Notice of Request for Extension and Revision of a Currently Approved Information Collection

AGENCY: Agricultural Marketing Service, USDA.

ACTION: Notice and request for comments.

SUMMARY: In accordance with the Paperwork Reduction Act of 1995 (44 U.S.C. Chapter 35), this notice announces the Agricultural Marketing Service's (AMS) intention to request an extension for and revision to a currently approved information collection for Recordkeeping Requirements for Certified Applicators of Federally Restricted Use Pesticides (7 CFR Part 110).

DATES: Comments on this notice must be received by April 9, 1999, to be assured of consideration.

ADDITIONAL INFORMATION OR COMMENTS: Contact Bonnie Poli, Chief, Pesticide Records Branch, Science and Technology, AMS, 8700 Centreville Road, Suite 202, Manassas, VA 20110, Telephone (703) 330–7826; Fax (703) 330–6110.

SUPPLEMENTARY INFORMATION:

Title: Recordkeeping Requirements for Certified Applicators of Federally Restricted Use Pesticides.

OMB Number: 0581–0164.

Expiration Date of Approval: September 30, 1999.

Type of Request: Extension and revision of a currently approved information collection.

Abstract: The regulations, ''Recordkeeping Requirements for Certified Applicators of Federally Restricted Use Pesticides,'' require certified pesticide applicators to maintain records of federally restricted use pesticide applications for a period of two years. The regulations also provide for access to pesticide records or record information by Federal or State officials, or by licensed health care professionals when needed to treat an individual who may have been exposed to restricted use pesticides, and penalties for enforcement of the recordkeeping and access provisions.

The Food, Agriculture, Conservation, and Trade Act of 1990, (Pub. L. 101–624; 7 U.S.C. 136i–1), referred to as the FACT Act, directs and authorizes the Department to develop regulations which establish requirements for recordkeeping by all certified applicators of federally restricted use pesticides. A certified applicator is an individual who is certified by the Environmental Protection Agency (EPA) or a State under cooperative agreement with EPA to use or supervise the use of restricted use pesticides.

Section 1491 of the FACT Act directs and authorizes the Secretary of Agriculture to ensure compliance with regulations as the Secretary may prescribe, including levying penalties, for failure to comply with such regulations.

Because this is a regulatory program with enforcement responsibility, USDA must ensure that certified applicators are maintaining restricted use pesticide application records for the two year period required by the FACT Act. To accomplish this, USDA must collect information through personal inspections of certified applicator's restricted use pesticide application records.

The information collected is used only by authorized representatives of the USDA (AMS, Science and Technology national staff, other designated Federal employees, and designated State supervisors and their staffs), which are designated access to the record information through section 1491, subsection (b) of the FACT Act. The information is used to administer the Federal Pesticide Recordkeeping Program. The Agency is the primary user of the information, and the secondary user is each designated State agency which has a cooperative agreement with AMS.

Estimate of Burden: Public reporting burden for this collection of information is estimated as follows:

(a) Approximately 705,192 certified private applicators (recordkeepers) apply restricted use pesticides. It is estimated that on an average certified private applicators have a total annual burden of .35 hours per record keeper. Of the 705,192 certified private applicators, approximately 4,800 are selected annually for recordkeeping inspections. It is estimated that a private applicator that is subject to a pesticide record inspection has an annual burden of .85 hours, which contributes to a total annual burden of 4,080 hours.

(b) There are approximately 308,583 certified commercial applicators nationally who are required to provide copies of restricted use pesticide application records to their clients. It is estimated that certified commercial applicators have a total annual burden of 1,520,697 hours.

(c) It is estimated that State agency personnel who work through cooperative agreements with AMS, to inspect certified private applicator's records have a total annual burden of 11,020 hours.

Respondents: Certified private and commercial applicators, State governments or employees, and Federal agencies or employees.

Estimated Number of Respondents: 1,018,651—The total number of respondents includes approximately 308,583 certified commercial applicators, 705,192 certified private applicators (recordkeepers) and designated state agency personnel utilized to inspect certified private applicator's records.

Estimated Number of Responses per Respondent: The estimated number of responses per respondent is as follows:

(a) It is estimated that certified private applicators (recordkeepers), record on an average 5 restricted use pesticide application records annually.

(b) It is estimated that certified commercial applicators provide 616 copies of restricted use pesticide records to their clients annually.

(c) State agency personnel, who work under cooperative agreements with AMS to conduct restricted use pesticide record inspections have approximately 4,951 responses annually.

Estimated Total Annual Burden on Respondents: 1,782,614 hours.

Comments are invited on: (1) whether the proposed collection of information is necessary for the proper performance of the functions of the agency, including whether the information will have

practical utility; (2) the accuracy of the agency's estimate of the burden of the proposed collection of information, including the validity of the methodology and assumptions used; (3) ways to enhance the quality, utility, and clarity of the information to be collected; and (4) ways to minimize the burden of the collection of information on those who are to respond, including through the use of appropriate automated, electronic, mechanical, or other technological collection techniques, or other forms of information technology. Comments may be sent to Bonnie Poli, Chief, Pesticide Records Branch, Science and Technology, AMS, 8700 Centreville Road, Suite 202, Manassas, VA 20110. All comments received will be available for public inspection during regular business hours at the same address.

All responses to this notice will be summarized and included in the request for OMB approval. All comments will become a matter of public record.

Dated: February 2, 1999.

William J. Franks, Jr.,

Deputy Administrator, Science and Technology.

[FR Doc. 99–2947 Filed 2–5–99; 8:45 am]

BILLING CODE 3410–02–P

DEPARTMENT OF AGRICULTURE

Animal and Plant Health Inspection Service

[Docket No. 98–118–1]

Availability of an Environmental Assessment and Strategy: Risk Reduction in the Florida Medfly Eradication Program

AGENCY: Animal and Plant Health Inspection Service, USDA.

ACTION: Notice.

SUMMARY: We are advising the public that a final environmental assessment has been prepared by the Animal and Plant Health Inspection Service (APHIS) to explore risk reduction strategies relative to Medfly program activities in the State of Florida. Additionally, APHIS has prepared a strategy regarding risk reduction in the Florida Medfly eradication program. This notice announces the availability of both documents for public inspection.

ADDRESSES: The environmental assessment and the strategy are available for public inspection at USDA, room 1141, South Building, 14th Street and Independence Avenue SW., Washington, DC, between 8 a.m. and 4:30 p.m., Monday through Friday, except holidays. Persons wishing to inspect those documents are requested to call ahead on (202) 690–2817 to facilitate entry into the reading room. To request copies of the environmental assessment or the strategy, write to the person listed under **FOR FURTHER INFORMATION CONTACT.** Please refer to the title of the environmental assessment or strategy when requesting copies.

FOR FURTHER INFORMATION CONTACT: Mr. Michael B. Stefan, Operations Officer, Domestic and Emergency Operations, PPQ, APHIS, 4700 River Road Unit 134, Riverdale, MD 20737–1236; (301) 734–8247.

SUPPLEMENTARY INFORMATION: The Mediterranean fruit fly, *Ceratitis capitata* (Wiedemann), (Medfly) is one of the world's most destructive pests of fruit and vegetables. The Medfly has been introduced into Florida a total of 13 times, including its first introduction in 1929. Because of the Medfly's potential for rapid range expansion, Medfly outbreaks in Florida represent major threats to agriculture, the environment, and the quality of life in Florida and other U.S. mainland States. The Animal and Plant Health Inspection Service (APHIS) of the United States Department of Agriculture cooperates with the Florida State Department of Agriculture to eradicate Medfly and to prevent future infestations. All Medfly outbreaks in Florida have been successfully eradicated using a combination of nonchemical and chemical control methods.

Consistent with our continued goal of preventing and eradicating Medfly infestations, we are committed to reexamining the Florida Medfly program for the purpose of achieving maximum risk reduction, including minimizing risks to the environment and human health. As part of that commitment, we have prepared environmental analyses and risk assessments, held a number of public meetings, and analyzed comments from the public regarding the Florida Medfly program in order to establish a final Florida Medfly program risk reduction strategy. This notice announces the availability of two documents that identify various means to potentially reduce risk in the Florida Medfly program:

- Risk Reduction Strategy, Florida Medfly Program, Environmental Assessment, June 1998.
- Strategy: Risk Reduction in Florida Medfly Eradication Programs, January 1999.

The environmental assessment has been prepared in accordance with: (1) The National Environmental Policy Act of 1969, as amended (NEPA) (42 U.S.C. 4321 *et seq.*), (2) regulations of the Council on Environmental Quality for implementing the procedural provisions of NEPA (40 CFR parts 1500–1508), (3) USDA regulations implementing NEPA (7 CFR part 1b), and (4) APHIS' NEPA Implementing Procedures (7 CFR part 372).

Done in Washington, DC, this 2nd day of February 1999.

Joan M. Arnoldi,

Acting Administrator, Animal and Plant Health Inspection Service.

[FR Doc. 99–2939 Filed 2–5–99; 8:45 am]

BILLING CODE 3410–34–P

DEPARTMENT OF AGRICULTURE

Forest Service

Threatened and Endangered Species Management on the Allegheny National Forest, Warren, McKean, Elk and Forest Counties, Pennsylvania

AGENCY: Forest Service, USDA.

ACTION: Notice of intent to prepare an environmental impact statement.

SUMMARY: The Forest Service will prepare a Draft and a Final Environmental Impact Statement to disclose the environmental consequences of amending the Forest Plan to include various strategies for managing federally listed threatened and endangered species on the Allegheny National Forest. Species to be considered include the Indiana bat (Myotis sodalis), the clubshell mussel (Pleurobema clava) and the northern riffleshell mussel (Epioblasma torulosa rangiana), which are federally listed as endangered, and the small whorled pogonia (Isotria medeoloides) and the bald eagle (Haliaeetus leucocephalus) which are federally listed as threatened. The proposed action is to amend and supplement the standards and guides in the Allegheny Land and Resource Management Plan (Forest Plan).

The purpose and need for this proposal is to maintain and enhance habitat to ensure the continued existence of the aforementioned threatened and endangered species in light of new information recently acquired. There is a need to adjust some of the existing standards and guides and provide some additional direction in the Forest Plan to ensure their conservation. Based on a review of the regulations (36 CFR 219.10f) and of the Forest Service Manual and Handbook direction (FSM 1922.51 and FSH Chapter 5.32) the proposed action is a non-significant amendment to the Forest Plan. The

proposed action does not significantly alter the long term goals and objectives nor management area designations of the current plan. The decision to amend the plan will extend until the Forest Plan is revised, which is planned for the year 2001.

The Allegheny National Forest Land and Resource Management Plan, at the time it was completed in 1986, considered pertinent threatened and endangered species and appropriate mitigation measures. This amendment will consider the new information which has come out since 1986. Forest Plan direction will be amended, where necessary, to ensure standards and guidelines incorporate currently available knowledge concerning these species.

Any modification required will be based on the range of site-specific conditions that exist on the Allegheny National Forest and will be designed to mitigate impacts from the ongoing and future projects and to enhance the recovery of the threatened and endangered Species.

As an initial step in completing this new Draft and Final Environmental Impact Statement, Allegheny National Forest personnel have completed a biological assessment which has been submitted to the USDI-Fish and Wildlife Service for their consideration in preparing the biological opinion. This biological assessment contains suggested terms and conditions which relate to managing these threatened and endangered Species. Many of these are already part of the standards and guidelines in the Forest Plan.

Allegheny National Forest personnel invite written comments and suggestions on the scope of this analysis and environmental impact statement. That is, the Allegheny National Forest would like comments on what issues and possible alternatives should be considered and analyzed. In addition, the agency gives notice that the environmental impact statement preparation process will be conducted so that interested and affected people are aware of how they may participate in and contribute to the final decision. This environmental impact statement will result in an amendment to the Allegheny National Forest Land and Resource Management Plan.

DATES: Comments and suggestions concerning the scope of the analysis should be submitted in writing and postmarked by March 10, 1999, to ensure timely consideration.

ADDRESSES: Send written comments to Endangered Species Management, Allegheny National Forest, P. O. Box 847, Warren PA 16365.

FOR FURTHER INFORMATION, CONTACT: Brad Nelson, Allegheny National Forest at 814/723–5150.

SUPPLEMENTARY INFORMATION:

Forest Plan Background

The Allegheny National Forest Land and Resource Management Plan (Forest Plan), approved in 1986, provides for the management of forest resources. The Forest Plan was developed to maintain or enhance the species composition, structure, and functioning of Allegheny plateau ecosystems on the Allegheny National Forest, while providing a variety of goods and services to the American people.

Analysis documented in the Final Environmental Impact Statement evaluated potential effects on threatened and endangered species inhabiting the Allegheny National Forest and determined actions Allegheny National Forest personnel should implement which would contribute toward their recovery.

As part of the planning process, Federal agencies are required to comply with provisions of the Endangered Species Act of 1973, as amended. This includes a requirement to consult with the U. S. Department of Interior, Fish and Wildlife Service on proposals which may affect species federally listed as threatened, endangered, or proposed. In February 1986, consultation was completed for the newly-developed Forest Plan.

Since then, the Fish and Wildlife Service and the Allegheny National Forest have continued consulting when three different Environmental Impact Statements proposed amendments to the Forest Plan, when new issues have arisen, and when new species were added to the endangered species list.

New Information Related to Threatened and Endangered Species

In July 1998, based on additional new information, Allegheny National Forest personnel began informal consultation again with the Fish and Wildlife Service. That information included the following: Bald eagle populations have increased, with three new nests located on or near the Allegheny National Forest; the Indiana bat was found on the Allegheny National Forest; and two species of fresh water mussels had been added to the Federal list of threatened and endangered species.

Continuing research and inventory of threatened and endangered species populations on the Allegheny National Forest, as well as refinement of our knowledge of these species' habitat requirements, prompts us to update the potential effects of continued implementation of the existing Forest Plan, as amended, on these five Federally listed species.

Allegheny National Forest personnel completed a biological assessment for the five species and transmitted it to the Fish and Wildlife Service on December 17, 1998. The Biological Assessment includes proposed terms and conditions, and any modifications issued by the Fish and Wildlife Service in the bioligical opinion, would provide the basis for the Forest Plan amendment. These terms and conditions consititute the proposed action.

Proposed Action: Measures to Minimize Potential Adverse Effects to Threatened And Endangered Species

Indiana Bat

Current Forest Plan standards and guidelines provide protection to Indiana bat habitat and populations. The following measures are proposed to strengthen the Allegheny National Forest's ability to protect and manage habitat for this species. To understand these measures, distinctions are made between green units and salvage units. Green units are stands consisting primarily of live trees. Salvage units are where conditions such as insect and disease infestations or other catastrophic events have created a stand where the amount of dead and dying trees predominate (<40% of relative stand density in live trees).

The Allegheny National Forest standard of retaining 5–10 snags per acre will remain in effect for all salvage units, while most snags will be retained in green units. The modified standards would add a size requirement for some of the retained snags. Retention of clumps of existing trees in stands to be final harvested remains an important component of bat habitat.

Caves

1. Continue working with universities, Pennsylvania Game Commission, and local Allegheny National Forest users to locate and survey caves that may contain Indiana bats. If an Indiana bat hibernaculum is found on the Allegheny National Forest, consult with the Fish and Wildlife Service to determine standards and guidelines necessary to protect and manage the hibernaculum.

Potential Roosting/Foraging Habitat

1. Retain shagbark and shellbark hickories regardless of size in partial and final harvest cutting units.

2. For green units (both partial and final harvests) retain snags that do not pose a safety hazard to the sawyer or the public. Retain at least 8–15 live trees per acre greater than 9 inches diameter at breast height in all final harvest units and retain at least 16 live trees per acre greater than 9 inches diameter at breast height in partial cuts.

3. For salvage units in partial cuts retain at least 5–10 snags per acre greater than or equal to 9″ diameter at breast height and of these 1 tree for each 2 acres greater than or equal to 20″ diameter at breast height. Retain at least 16 live trees per acre greater than or equal to 9″ diameter at breast height and 3 live trees for each acre greater than or equal to 20″ diameter at breast height as recommended by the Indiana Bat Recovery Team.

4. When planning partial cuts, strive to reduce canopy closure to 60–80 percent.

5. For salvage units in final harvest cuts and clearcuts, retain at least an average of 3 snags for each acre greater than or equal to 9″ diameter at breast height, of these snags retain 1 for each 10 acres greater than or equal to 12″ diameter at breast height. Retain at least 8–15 live trees/acre greater than or equal to 9″ diameter at breast height and at least 1 tree for each acre greater than or equal to 20″ diameter at breast height.

6. Avoid removal of known roost trees. In the unlikely event that a known roost tree must be removed, such removal will be conducted through consultation with the Fish and Wildlife Service.

7. Known maternity roosts may be removed at any time, after consultation with Fish and Wildlife Service, if they constitute an immediate threat to public safety. However, such removal will be as a last resort, after other alternatives (such as fencing the area, etc.) have been considered and deemed unacceptable.

8. Demolition or removal of buildings or other man-made structures that harbor bats should occur while the bats are hibernating and a bat box should be installed in a proper location to provide an alternate roosting site. If public safety is threatened and the building must be removed while bats are present, a bat expert should examine the building to determine if Indiana bats are present. If Indiana bats are present, consultation with Fish and Wildlife Service is required before removal. If none are present, demolition can proceed.

9. If new planned road and trail construction, wildlife opening construction, gravel pit development, federally owned oil and gas development, or other non-forest uses create conditions where the amount of forested acres drop below 30 percent of the watershed, consultation with the Fish and Wildlife Service will be initiated to determine how best to provide habitat for the Indiana bat.

Water Sources

1. Create or renovate bat drinking water sources where none are currently available (a minimum of one per square mile).

2. Allow water filled road ruts to remain where they do not compromise soil and water quality.

Inventory, Monitoring, and Research

1. Follow interagency working group and/or Indiana Bat Recovery Plan recommendations for research, inventory and monitoring habitat and populations across the Allegheny National Forest.

2. Pursue additional funding and partnership opportunities to complete needed research, inventory, and monitoring work.

3. Monitor snags, den trees, and reserve live trees on 10 final harvest units and 10 partial cuts annually across the Allegheny National Forest.

4. Where opportunities arise, work with land owners, general public, and other agencies to promote education and information about endangered bats and their conservation.

Clubshell And Northern Riffleshell Mussels

Current Forest Plan standards and guidelines provide protection to clubshell and northern riffleshell populations and habitat. The following measures are proposed to strengthen the Allegheny National Forest's ability to correct erosion and sedimentation problems that may result from past road and trail problems:

Continue to identify erosion and sedimentation problems associated with Forest Service activities (primarily old roads and trails) with particular attention to the 13 percent of the Allegheny National Forest that drains directly into the Allegheny River. Where necessary implement practices such as: (1) Using less erosive road surfacing material (limestone) along sections of roads, and/or stream crossings to the first cross-drain on either side of the crossing; (2) placing rip rap at the outlet of those cross-drains on steep fill-slopes; (3) placing additional cross-drains to dissipate runoff more frequently to avoid concentrating more flow which could lead to formation of a new channel to a stream, (4) placing additional cross-drains before a stream crossing, (5) restricting use on problem roads (change from ''open'' to ''restricted'', and (6) obliterate roads no longer needed for management activities that have potential for sediment input into a stream course.

Bald Eagle

The following measures are proposed to strengthen the Allegheny National Forest's ability to protect and manage habitat for this species.

1. Change the seasonal restriction from February 1 to January 15 and re-write the Forest Plan standards and guidelines to be compatible with the Bald Eagle Recovery Plan.

2. For any new access sites on Allegheny National Forest land within the Allegheny Wild and Scenic River corridor, or requiring federal funding or authorization, bald eagle use will be assessed within the section of river corridor where human use will likely increase.

3. The Forest Service will consult with Fish and Wildlife Service on any Forest Service activities within the buffer zones around each nest.

4. The Forest Service will collect data necessary to determine the level of potential effects to nesting eagles on the Allegheny Reservoir by determining the level of boating activity and the behavior of the nesting pair while foraging and nesting before and after Memorial Day. If any harrassment is noted or suspected, the Fish and Wildlife Service will be contacted.

5. Continue discussions with the Pennsylvania Game Commission, U.S. Army Corps of Engineers and USDI-Fish and Wildlife Service to determine if boat access needs to be restricted in Cornplanter Bay.

6. The new contract for operating recreation areas and boat launches on the Allegheny Reservoir will stipulate that discarded fishing line along the shoreline developed for access will be cleaned up monthly during the summer.

7. Signing and/or news releases to educate hunters not to shoot eagles will be developed and distributed by Allegheny National Forest personnel.

Small Whorled Pogonia

1. The survey of potential habitat within 227,000 acres of the Allegheny National Forest has not found the small whorled pogonia. Since no small whorled pogonias have been found, a new survey approach is worth testing. The new proposed survey strategy would identify the habitat with the highest potential for finding small whorled pogonia and survey those areas each year. This would substitute for the current practice of surveying for each individual project. By surveying the highest potential habitat, the likelihood

of finding the species on the Allegheny National Forest will be increased. If found, a better understanding of its habitat needs can be assessed.

2. If a small whorled pogonia is found on the Allegheny National Forest, consultation with the Fish and Wildlife Service will be re-initiated.

The Allegheny National Forest entered into formal consultation with the Fish and Wildlife Service on December 18, 1998. During formal consultation, the Fish and Wildlife Service may elect to change or delete some of these proposed terms and conditions, or they may add new terms and conditions. We expect the Fish and Wildlife Service to issue a biological opinion with the final terms and conditions early in the first half of 1999.

Proposed Forest Plan Amendment and Draft Environmental Impact Statement

Once the biological opinion is issued, Allegheny National Forest personnel will complete the Draft Environmental Impact Statement and send it out for review and comment.

The analysis documented in Draft Environmental Impact Statement will consider a range of alternatives. One of these alternatives will evaluate no change to the current Forest Plan (No Action). A second alternative would be the proposed action which is to amend the Forest Plan to incorporate the terms and conditions proposed in the Biological Assessment, as modified by the Biological Opinion to be issued. Issues which are generated through the scoping process may generate additional alternatives.

Federal, State, and local agencies, and other individuals or organizations who may be interested in or affected by the decision are invited to participate in the scoping process. This process includes the following: (1) Identification of potential issues; (2) identification of issues to be analyzed in depth; and (3) elimination of insignificant issues, those outside the scope of this analysis, or those which have been covered by a previous environmental review. At this point in the process, we would appreciate your comments on what issues and possible alternatives should be considered and analyzed. Comments directed toward the substance of the project, as opposed to the scope of the analysis, are more appropriately submitted during the comment period following release of the draft environmental impact statement.

Preliminary issues identified include the following:

1. What are the effects of implementing current Forest Plan direction on threatened and endangered species known to exist on or near the Allegheny National Forest (and their habitat), given current knowledge?

2. Are there additional actions Allegheny National Forest personnel should implement that would contribute toward the recovery of these species?

3. What are the changes to the current Forest Plan activities, outputs, and environmental effects from implementing any additional actions?

The Draft Environmental Impact Statement is expected to be filed with the Environmental Protection Agency and to be available for public review during April or May of 1999. At that time, the Environmental Protection Agency (EPA) will publish in the **Federal Register** a notice of availability of the draft environmental impact statement. The comment period on the draft will be 45 days from the date the EPA notice appears in the **Federal Register**.

Related Court Rulings

The Forest Service believes it is important to give reviewers notice at this early stage of several court rulings related to public participation in the environmental review process. First, reviewers of draft environmental impact statements must structure their participation in the environmental review of the proposals so that it is meaningful and alerts an agency to the reviewers position and contentions, Vermont Yankee Nuclear Power Corp. v. NRDC, 435 U.S. 519, 553 (1978). Also, environmental objections that could be raised at the draft environmental impact statement stage may be waived if not raised until after completion of the final environmental impact statement, City of Angoon v. Hodel, 803 F.2d 1016, 1022 (9th Cir .1988), and Wisconsin Heritages, Inc. v. Harris, 490 F. supp. 1334, 1338 (E. D. Wis. 1980). Because of these court rulings, it is very important that those interested in this proposed action participate by the close of the 45-day comment period so that substantive comments and objections are made available to the Forest Service at a time when it can meaningfully consider them and respond to them in the final environmental impact statement.

Comments and Decision

Comments on the draft environmental impact statement should be as specific as possible. It is also helpful if comments refer to specific pages or chapters of the draft statement. Comments may also address the adequacy of the draft environmental impact statement or the merits of the alternatives formulated and discussed in the statement (Reviewers may wish to refer to CEQ Regulations for implementing the procedural provisions of the National Environmental Policy Act at 40 CFR 1503.3 in addressing these points). After the comment period ends on the draft environmental impact statement, the comments received will be analyzed and considered by the Forest Service in preparing the final environmental impact statement.

The final environmental impact statement is scheduled to be completed in August of 1999. In the final Environmental Impact Statement, the Forest Service is required to respond to the comments received (40 CFR 1503.4). The responsible official will consider the comments, responses, environmental consequences discussed in the environmental impact statement, and applicable laws, regulations and policies in making a decision regarding this proposal. The responsible official will document the decision and reasons for the decision in a Record of Decision. That decision will be subject to appeal under 36 CFR part 217.

The responsible official is John E. Palmer, Forest Supervisor, Allegheny National Forest, 222 Liberty Street, P.O. Box 847, Warren PA 16365.

Dated: February 2, 1999.

John E. Palmer,

Forest Supervisor.

[FR Doc. 99–2907 Filed 2–5–99; 8:45 am]

BILLING CODE 3410–11–P

COMMISSION ON CIVIL RIGHTS

Agenda and Notice of Public Meeting of the New Jersey Advisory Committee

Notice is hereby given, pursuant to the provisions of the rules and regulations of the U.S. Commission on Civil Rights, that a meeting of the New Jersey Advisory Committee to the Commission will convene at 11:00 a.m. and adjourn at 5:30 p.m. on February 26, 1999, at the Newark City Council Chambers, 920 Broad Street, Newark, New Jersey 07102. The Committee will (1) discuss a project on ''Civil Rights Enforcement in New Jersey: An Evaluation of the State's Division of Civil Rights'', (2) review subcommittee work on employment discrimination against Asian American State government employees, (3) conduct planning for upcoming activity, and (4) listen to invited speakers give their views on significant civil rights issues affecting the Newark area and New Jersey.

Persons desiring additional information, or planning a presentation

to the Committee, should contact Committee Chairperson Irene Hill-Smith, 609–468–5546, or Ki-Taek Chun, Director of the Eastern Regional Office, 202–376–7533 (TDD 202–376–8116). Hearing-impaired persons who will attend the meeting and require the services of a sign language interpreter should contact the Regional Office at least ten (10) working days before the scheduled date of the meeting.

The meeting will be conducted pursuant to the provisions of the rules and regulations of the Commission.

Dated at Washington, DC, January 29, 1999.

Carol-Lee Hurley,

Chief, Regional Programs Coordination Unit.

[FR Doc. 99–2941 Filed 2–5–99; 8:45 am]

BILLING CODE 6335–01–F

COMMISSION ON CIVIL RIGHTS

Agenda and Notice of Public Meeting of the Ohio Advisory Committee

Notice is hereby given, pursuant to the provisions of the rules and regulations of the U.S. Commission on Civil Rights, that a meeting of the Ohio Advisory Committee to the Commission will convene at 1:00 p.m. and adjourn at 5:00 p.m. on Thursday, February 25, 1999, at the Metropolitan Campus of Cuyahoga Community College, 2900 Community College Avenue, Student Center Building, United Room—3rd Floor, Cleveland Ohio 44115. The purpose of the meeting is to: (1) discuss civil rights issues, (2) plan future activities, and (3) review and approve the Committee's report, ''Employment Opportunities for Minorities in Montgomery County, Ohio.''

Persons desiring additional information, or planning a presentation to the Committee, should contact Committee Chairperson Grace Ramos, 614–466–6715, or Constance M. Davis, Director of the Midwestern Regional Office, 312–353–8311 (TDD 312–353–8362). Hearing-impaired persons who will attend the meeting and require the services of a sign language interpreter should contact the Regional Office at least ten (10) working days before the scheduled date of the meeting.

The meeting will be conducted pursuant to the provisions of the rules and regulations of the Commission.

Dated at Washington, DC, January 27, 1999.

Carol-Lee Hurley,

Chief, Regional Programs Coordination Unit.

[FR Doc. 99–2940 Filed 2–5–99; 8:45 am]

BILLING CODE 6335–01–P

COMMISSION ON CIVIL RIGHTS

Agenda and Notice of Public Meeting of the Rhode Island Advisory Committee

Notice is hereby given, pursuant to the provisions of the rules and regulations of the U.S. Commission on Civil Rights, that a meeting of the Rhode Island Advisory Committee to the Commission will convene at 4:00 p.m. and adjourn at 7:30 p.m. on March 2, 1999, at the Pawtucket City Hall, City Council Chamber, 137 Roosevelt Avenue, Pawtucket, Rhode Island 02860. The purpose of the meeting is to be briefed by invited civil rights advocates on the status of civil issues in Rhode Island. The Committee will plan for future events and review a draft of the Committee's statement of concern, The Impact of the Personal Responsibility and Work Opportunity Reconciliation Act of 1996 on Legal Immigrants in Rhode Island.

Persons desiring additional information, or planning a presentation to the Committee, should contact Committee Chairperson Olga Noguers, 401–464–1876, or Ki-Taek Chun, Director of the Eastern Regional Office, 202–376–7533 (TDD 202–376–8116). Hearing-impaired persons who will attend the meeting and require the services of a sign language interpreter should contact the Regional Office at least ten (10) working days before the scheduled date of the meeting.

The meeting will be conducted pursuant to the provisions of the rules and regulations of the Commission.

Dated at Washington, DC, January 29, 1999.

Carol-Lee Hurley,

Chief, Regional Programs Coordination Unit.

[FR Doc. 99–2942 Filed 2–5–99; 8:45 am]

BILLING CODE 6335–01–P

DEPARTMENT OF COMMERCE

International Trade Administration

[A–427–801, A–428–801, A–475–801, A–588–804, A–485–801, A–559–801, A–401–801, and A–412–801]

Antifriction Bearings (Other Than Tapered Roller Bearings) and Parts Thereof From France, Germany, Italy, Japan, Romania, Singapore, Sweden, and the United Kingdom: Notice of Extension of Time Limits for Preliminary Results of Antidumping Administrative Reviews

AGENCY: Import Administration, International Trade Administration, Department of Commerce.

ACTION: Notice of extension of time limits for preliminary results of antidumping duty administrative reviews.

EFFECTIVE DATE: February 8, 1999.

FOR FURTHER INFORMATION CONTACT: Richard Rimlinger, AD/CVD Enforcement, Import Administration, International Trade Administration, U.S. Department of Commerce, 14th Street and Constitution Avenue, N.W., Washington, D.C. 20230; telephone: (202) 482–4477.

The Applicable Statute

Unless otherwise indicated, all citations to the statute are references to the provisions effective January 1, 1995, the effective date of the amendments made to the Tariff Act of 1930 (the Act) by the Uruguay Round Agreements Act.

Extension of Time Limits for Preliminary Results

The Department of Commerce (the Department) has received requests to conduct administrative reviews of the antidumping duty orders on antifriction bearings (other than tapered roller bearings) and parts thereof (AFBs) from France, Germany, Italy, Japan, Romania, Singapore, Sweden, and the United Kingdom. On June 29, 1998, the Department initiated these administrative reviews covering the period May 1, 1997, through April 30, 1998.

Another matter has recently placed unanticipated heavy burdens on the Department's limited resources. These burdens are short term; however, they have made it so that it is not practicable to complete the AFBs reviews within the time limits mandated by section 751(a)(3)(A) of the Act. The Department, therefore, is extending the due date for the preliminary results to February 16, 1999. The Department intends to issue the final results of reviews 120 days after the publication of the preliminary results. This extension of the time limit is in accordance with section 751(a)(3)(A) of the Act.

Dated: January 29, 1999.

Richard W. Moreland,

Deputy Assistant Secretary for Import Administration.

[FR Doc. 99–2997 Filed 2–5–99; 8:45 am]

BILLING CODE 3510–DS–P

DEPARTMENT OF COMMERCE

INTERNATIONAL TRADE ADMINISTRATION

[A–122–601]

Brass Sheet and Strip from Canada: Preliminary Results of Antidumping Duty Administrative Review, Intent Not To Revoke Order in Part, and Extension of Time Limit

AGENCY: Import Administration, International Trade Administration, Department of Commerce.

ACTION: Notice of preliminary results of antidumping duty administrative review, intent not to revoke order in part, and extension of time limit.

SUMMARY: In response to separate requests by Wolverine Tube (Canada), Inc. (Wolverine), the respondent, and by Hussey Copper, Ltd,; The Miller Company; Olin Corporation; Revere Copper Products, Inc,; International Association of Machinists and Aerospace Workers; International Union, Allied Industrial Workers of America (AFL–CIO); Mechanics Educational Society of America, and United Steelworkers of America (AFL–CIO), collectively, the petitioner, the Department of Commerce (the Department) is conducting an administrative review of the antidumping duty order on brass sheet and strip from Canada. The review covers one manufacturer/exporter of this merchandise to the United States, Wolverine. The period covered is January 1, 1997 through December 31, 1997. As a result of the review, the Department has preliminarily determined that no dumping margins exist for his respondent for the covered period. However, we do not intend to revoke the order with respect to brass sheet and strip from Canada manufactured by Wolverine, since we found in our final results covering the 1996 period of review that sales made during that period were made below normal value.

We invite interested parties to comment on these preliminary results. Parties who submit argument in this proceeding are requested to submit with the argument (1) a statement of issue and (2) a brief summary of the argument.

EFFECTIVE DATE: February 8, 1999.

FOR FURTHER INFORMATION CONTACT: Paul Stolz or James Terpstra, Office of Antidumping/Countervailing Duty Enforcement, Import Administration, International Trade Administration, U.S. Department of Commerce, 14th Street and Constitution Avenue, NW, Washington, DC 20230; telephone: (202) 482–4474 or 482–3965, respectively.

SUPPLEMENTARY INFORMATION:

Applicable Statute and Regulations

Unless otherwise indicated, all citations to the statute are references to the provisions effective January 1, 1995, the effective date of the amendments made to the Tariff Act of 1930 (the Act) by the Uruguay Round Agreements Act (URAA). In addition, unless otherwise indicated, all citations to the Department's regulations refer to the regulations codified at 19 CFR Part 351 (1998).

Background

The Department published an antidumping duty order on brass sheet and strip from Canada on January 12, 1987 (52 FR 1217). On January 12, 1998, the Department published a notice of ''Opportunity to Request an Administrative Review'' of the antidumping duty order on brass sheet and strip from Canada (63 FR 1820). On January 30, 1998, a manufacturer/exporter, Wolverine, requested an administrative review of its exports of the subject merchandise to the United States for the period of review (POR), January 1, 1997, through December 31, 1997. In accordance with 19 CFR 351.213 we published a notice of initiation of administrative review on February 27, 1998 (63 FR 10002). The Department is now conducting this administrative review in accordance with section 751 of the Act.

Scope of Review

Imports covered by this review are shipments of brass sheet and strip (BSS), other than leaded and tinned BSS. The chemical composition of the covered products is currently defined in the Copper Development Association (C.D.A.) 200 Series or the Unified Numbering System (U.N.S.) C2000. This review does not cover products the chemical compositions of which are defined by other C.D.A. or U.N.S. series. In physical dimensions, the products covered by this review have a solid rectangular cross section over 0.006 inches (0.15 millimeters) through 0.188 inches (4.8 millimeters) in finished thickness or gauge, regardless of width. Coiled, wound-on-reels (traverse would), and cut-to-length products are included. The merchandise is currently classified under Harmonized Tariff Schedule (HTS) item numbers 7409.21.00 and 7409.29.00. Although the HTS item numbers are provided for convenience and customs purposes, the Department's written description of the scope of this order remains dispositive. Pursuant to the final affirmative determination of circumvention of the antidumping duty order, covering the period September 1, 1990, through September 30, 1991, we determined that brass plate used in the production of BSS falls within the scope of the antidumping duty order on BSS from Canada. *See Brass Sheet and Strip from Canada: Final Affirmative Determination of Circumvention of Antidumping Duty Order*, 58 FR 33610 (June 18, 1993).

The POR is January 1, 1997 through December 31, 1997. The review involves one manufacturer/exporter, Wolverine.

Export Price

We used export price (EP), as defined in section 772 of the Act, because the merchandise was sold to unaffiliated U.S. purchasers prior to the date of importation and because no other circumstances indicated that constructed export price was appropriate. We calculated EP based on delivered prices. In accordance with section 772(c)(1) of the Act, we adjusted EP for brokerage and handling, foreign and U.S. inland freight, and customs duty. We also recalculated imputed credit expenses for U.S. sales based on the U.S. prime interest rate. *See* ''Further Developments'' as described below. No other adjustments to EP were claimed or allowed.

Normal Value (NV)

A. Viability

In order to determine whether there was a sufficient volume of sales in the home market to serve as a viable basis for calculating NV, we compared Wolverine's volume of home market sales of the foreign like product to the volume of U.S. sales of the subject merchandise, in accordance with section 773(a)(1)(C) of the Act. Because of Wolverine's aggregate volume of home market sales of the foreign like product was greater than five percent of its aggregate volume of U.S. sales of the subject merchandise, we determined that the home market provides a viable basis for calculating NV for Wolverine.

B. Below Cost of Production Test

Because we disregarded sales below the cost of production in the 1996 POR, the most-recently completed segment of this proceeding, we have reasonable grounds to believe or suspect that sales of the foreign like product under consideration for determining NV in this review may have been at prices below the cost of production (COP), within the meaning of section

773(b)(2)(A)(ii) of the Act. Therefore, pursuant to section 773(b)(1) of the Act, we initiated a COP investigation of sales by Wolverine (*see* Memorandum to the File, dated March 31, 1998, available in Room B–099 of the Main Commerce Building). In accordance with section 773(b)(3) of the Act, we calculated COP based on the sum of materials and fabrication employed in producing the foreign like product, plus selling, general, and administrative expenses (SG&A) and the cost of all expenses incidental to placing the foreign like product in condition packed ready for shipment. We relied on the home market sales and COP information Wolverine provided in its questionnaire responses. After calculating COP, we tested whether home market sales of subject BSS were made at prices below COP within an extended period of time in substantial quantities, and whether such prices permitted the recovery of all costs within a reasonable period to time. We compared model-specific COPs to the reported home market prices less any applicable movement charges, direct selling expenses, and packing expenses.

Pursuant to section 773(b)(2)(C) of the Act, where less than twenty percent of Wolverine's home market sales for a model were at prices less than the COP, we did not disregard any below-cost sales of that model because we determined that the below-cost sales were not made within an extended period of time in ''substantial quantities.'' Where twenty percent or more of Wolverine's home market sales were at prices less than the COP, we determined that such sales were made within an extended period of time in substantial quantities in accordance with section 773(b)(2) (B) and (C) of the Act. To determine whether such sales were at prices which would not permit the full recovery of all costs within a reasonable period of time, in accordance with section 773(b)(2)(D) of the Act, we compared home market prices to the weighted-average COPs for the POR. The results of our cost test for Wolverine indicated that for certain home market models less than twenty percent of the sales of the model were at prices below COP. We therefore retained all sales of these models in our analysis and used them as the basis for determining NV. Our cost test for Wolverine also indicated that for certain other home market models more than twenty percent of the home market sales within an extended period of time were at prices below COP and would not permit the full recovery of all costs within a reasonable period of time. In accordance with section 773(b)(1) of the Act, we therefore excluded the below-cost sales of these models from our analysis and used the remaining above-cost sales as the basis for determining NV.

C. Model-Matching

We calculated NV using prices of BSS products having the same characteristics as to form, gauge, width, and alloy. We used the same gauge and width groupings and the same model-match methodology in this review as in the last completed administrative review (1996). As in the 1995 and 1996 reviews, we did not rely on ''source'' designations in the product codes for model matching purposes since the ''source'' (*i.e.*, whether reroll or nonreroll brass is used to make the product) does not appear to describe physical characteristics of the resulting subject merchandise itself; nor has Wolverine demonstrated that this is an appropriate matching criterion. Wolverine claimed in its response that the grain density of the reroll material obtained from outside suppliers was higher than that of its own cast material. Although this may be the case, respondent's claim has not been substantiated on the record of this review.

In addition, we noted in this review that the coding Wolverine reported for the ''temper'' matching characteristic included a secondary characteristic for ''finish.'' This characteristic had not previously been identified by the Department, nor has Wolverine adequately demonstrated that it is appropriate to use in model matching. Moreover, it is no longer clear whether Wolverine's reported temper codes are correct. Therefore, for the preliminary results of this review we are not considering ''finish'' or reported temper codes as matching characteristics and have adjusted our computer program accordingly. We will seek additional information on these issues following the preliminary results of this administrative review and will incorporate our findings into our analysis for the final results of this review. *See* ''Further Developments'' as described below.

We calculated NV using monthly weighted-average prices of BSS having the same characteristics as to form, gauge, width, and alloy. We based NV on the price at which the foreign like product is first sold for consumption in the exporting country, in the usual commercial quantities and in the ordinary course of trade, and at the same level of trade as the export price, in accordance with section 773(a)(1)(B)(i) of the Act.

We reduced NV for home market credit and warranty expenses, and increased NV for U.S. credit expenses and U.S. warranty expenses in accordance with section 773(a)(6)(C)(iii), due to differences in circumstances of sale. We reduced NV for home market movement expenses, in accordance with section 773(a)(6)(B)(ii); and for packing costs incurred in the home market, in accordance with section 773(a)(6)(B)(i); and increased NV to account for U.S. packing expenses. Wolverine reported ''quantity adders'' as a circumstance of sale adjustment. However, we have not made corresponding adjustments in this review. Wolverine failed to provide sufficient information to determine whether this adjustment should be made. Moreover, in the event that the Department determines that an adjustment is appropriate, it is not clear that Wolverine has properly quantified sales in both the home and U.S. markets. Accordingly, we have determined that the administrative record is incomplete with respect to this item and have made no corresponding adjustments. *See* ''Further Developments'' as described below.

Level of Trade

In accordance with section 773(a)(1)(B) of the Act, to the extent practicable, we determine NV based on sales in the comparison market at the same level of trade (LOT) as the EP or CEP transaction. The NV LOT is that of the starting-price sales in the comparison market or, when NV is based on CV, that of the sales from which we derive selling, general and administrative (SG&A) expenses and profit. For EP, the U.S. LOT is also the level of the starting-price sale, which is usually from the exporter to an unaffiliated U.S. customer. For CEP, it is the level of the constructed sale from the exporter to an affiliated importer, after the deductions required under section 772(d) of the Act. To determine whether NV sales are at a different LOT than EP or CEP, we examine stages in the marketing process and selling functions along the chain of distribution between the producer and the unaffiliated customer. If the comparison-market sales are at a different LOT, and the difference affects price comparability, as manifested in a pattern of consistent price differences between the sales on which NV is based and comparison-market sales at the LOT of the export transaction, we make an LOT adjustment under section 773(a)(7)(A) of the Act. Finally, for CEP sales, if the NV level is more remote from the factory than the CEP level and

there is no basis for determining whether the difference in the levels between NV and CEP affects price comparability, we adjust NV under section 773(a)(7)(B) of the Act (the CEP offset provision). *See Notice of Final Determination of Sales at Less Than Fair Value: Certain Cut-to-Length Carbon Steel Plate from South Africa*, 62 FR 61731 (November 19, 1997).

In this review, Wolverine stated in its questionnaire response that it was not requesting a LOT adjustment and therefore did not include the corresponding field ''LOTADJH'' in its reported home market sales list. Although Wolverine claimed that one of its two customer categories required a higher level of support than the other, it did not place information on the record in order to detail or quantify any possible resulting differences in selling functions which could potentially constitute different LOTs. Nor did we request additional information with respect to this issue.

Because the record does not show that Wolverine performed different selling functions with respect to different channels of distribution, we have preliminarily determined that there is only one LOT in the home market. Furthermore, since the record does not indicate differences in selling functions between the home market and the U.S. market, we have preliminarily determined that no level of trade adjustments under section 773(a)(7)(A) of the Act are warranted. However, we will reexamine this issue for the final results.

Further Developments

Both petitioner and respondent have submitted comments regarding the calculation of the preliminary results of this review. Submissions by both parties included untimely submitted new factual information. Therefore, the Department has required deletion of this information. However, in reaching its preliminary results, the Department has taken note of the portions of these submissions which contained relevant argument not based on new factual information. As a result, the Department has decided not to make adjustments in these preliminary results to the submitted prices for ''adders'' (surcharges on certain small quantity orders) and to disregard ''temper'' and ''finish'' as a matching characteristics, as described above. In addition, the Department has recalculated imputed credit expenses reported for U.S. sales. This recalculation was done since Wolverine reported imputed credit expenses for U.S. sales based on its home market interest rate. Sales to the U.S. market had been made in U.S. dollars, and therefore, in accordance with Department policy, imputed credit expenses for these sales should have been reported based on the company's U.S. interest rate or other applicable U.S. interest rate.

Moreover, petitioner has requested that we resort to facts available with respect to certain portions of the submitted data. However, there is insufficient basis on which to make such a determination at this time. In order to resolve these issues and certain other issues raised by petitioner's and respondent's comments, and to determine whether the application of facts available is appropriate, the Department has decided that additional information and further analysis is necessary. Therefore, following publication of these preliminary results, the Department will request additional information on ''interest'', ''general and administrative expenses'', ''finish'', ''temper'', ''packing'', and ''adders'' for use in its analysis for the final results of this review. Moreover, since the Department will collect and analyze additional information, the Department has determined that it is not practicable to complete the final results of this administrative review within the original time limit, and is therefore extending the due date for the final results of this review, pursuant to section 351.213(h)(2) of the Department's regulations, until 180 days from publication of these preliminary results.

Revocation

On January 30, 1998, Wolverine submitted its request for an administrative review covering the 1997 POR and, pursuant to 19 CFR 351.222(b), requested revocation of the antidumping duty order with respect to Wolverine. In its request, Wolverine stated that it expected to receive a *de minimis* margin in the final results of the 1996 and 1997 POR reviews. Wolverine noted that these would be the third and fourth consecutive *de minimis* margins received, and thus Wolverine would be eligible for revocation in accordance with 19 CFR 351.222(b)(2), which among other requirements stipulates that the respondent requesting revocation has sold the subject merchandise at not less than NV for at least three consecutive administrative reviews and is not likely to do so in the future. This request was accompanied by certifications from the firm that it had not sold the relevant class or kind of merchandise at less than NV for a two-year period and anticipated receiving a *de minimis* dumping margin in the 1996 POR and in the 1997 POR, and would not sell the relevant class or kind of merchandise at less than NV in the future. Wolverine also agreed to its immediate reinstatement in the relevant antidumping duty order, as long as any firm is subject to this order, if the Department concludes under 19 CFR 351.222(b)(2)(iii) that, subsequent to revocation, it sold the subject merchandise at less than NV.

However, with respect to the 1996 POR, we found in our final results of that review that sales had been made below NV and, therefore, the Department's requirements for revocation had not been met. *See Final Results of Administrative Review and Notice of Intent Not To Revoke Order in Part, Brass Sheet and Strip from Canada*, 63 FR 33037 (June 17, 1998). Previously, the Department had found that Wolverine's sales reviewed during the eighth (1994) and ninth (1995) reviews and under this order were made at not less than NV. The Department has also preliminarily determined in this administrative review, as described below, that sales under this order were not made at less than NV. Nonetheless, in light of the final results of the tenth (1996) administrative review, Wolverine is not entitled to revocation pursuant to 19 CFR 351.222(b).

Preliminary Results of the Review

As a result of our comparison of EP to NV, we preliminarily determine that a *de minimis* of (0.39 percent) exists for Wolverine for the period January 1, 1997 through December 31, 1997, and we determine, preliminarily, not to revoke the antidumping duty order with respect to imports of subject merchandise from Wolverine.

Parties to the proceeding may request disclosure within five days of the date of publication of this notice. Any interested party may request a hearing within 30 days of publication of this notice. Any hearing will be held 44 days after the date of publication or the first workday thereafter. Interested parties may submit case briefs within 30 days of the publication date of this notice. Rebuttal briefs, limited to issues raised in the case briefs, may be filed not later than 37 days after the date of publication. The Department will publish a notice of the final results of this administrative review, which will include the results of its analysis of issues raised in any such case briefs or at a hearing, within 180 days from publication of these preliminary results.

The following deposit requirements will be effective for all shipments of the subject merchandise that are entered, or

withdrawn from warehouse, for consumption on or after the publication date of the final results of this administrative review, as provided by section 751(a)(1) of the Act: (1) the cash deposit rate for Wolverine will be the rate established in the final results of this review (except that no deposit rate will be required for zero or *de minimis* margins, i.e., margins less than 0.5 percent); (2) for previously reviewed or investigated companies not listed above, the cash deposit rate will continue to be the company-specific rate published for the most recent period; (3) if the exporter is not a firm covered in this review, a prior review, or the original less-than-fair-value (LFTV) investigation, but the manufacturer is, the cash deposit rate will be the rate established for the most recent period for the manufacturer of the merchandise; and, (4) if neither the manufacturer nor the exporter is a firm covered in this or any previous review, the cash deposit rate will be 8.10 percent, the ''all others'' rate established in the LTFV investigation. These deposit requirements, when imposed, shall remain in effect until publication of the final results of the next administrative review.

Furthermore, the Department shall determine, and the Customs Service shall assess, antidumping duties on all appropriate entries. The Department will issue appraisement instructions directly to the Customs Service. The final results of this review shall be the basis for the assessment of antidumping duties on entries of merchandise covered by the determination and for future deposits of estimated duties. For Wolverine, for duty assessment purposes, we calculated importer-specific assessment rates by aggregating the dumping margins calculated for all U.S. sales to each importer and dividing this amount by the total entered value of those same sales. This specific rate calculated for each importer will be used for the assessment of antidumping duties on the relevant entries of subject merchandise during the POR. If for the final results of this review we calculate an assessment rate for Wolverine of less than 0.5 percent *ad valorem,* we will instruct Customs to liquidate Wolverine's entries of subject merchandise during the relevant POR without regard to antidumping duties.

This notice serves as a preliminary reminder to importers of their responsibility under 19 CFR 351.402(f) to file a certificate regarding the reimbursement of antidumping duties prior to liquidation of the relevant entries during this review period. Failure to comply with this requirement could result in the Secretary's presumption that reimbursement of antidumping duties occurred and the subsequent assessment of double antidumping duties.

This administrative review and this notice are in accordance with section 751(a)(1) of the Act (19 U.S.C. 1675(a)(1)) and 19 CFR 351.213, 351.221.

Dated: February 1, 1999.

Robert S. LaRussa,

Assistant Secretary for Import Administration.

[FR Doc. 99–2999 Filed 2–5–99; 8:45 am]

BILLING CODE 3510–DS–M

DEPARTMENT OF COMMERCE

International Trade Administration

[A–583–824]

Polyvinyl Alcohol From Taiwan: Preliminary Results of Antidumping Duty Administrative Review

AGENCY: Import Administration, International Trade Administration, Department of Commerce

ACTION: Notice of preliminary results of antidumping duty administrative review.

SUMMARY: In response to requests by the petitioner, Air Products and Chemicals, Inc., and by two manufacturers/exporters of subject merchandise, the Department of Commerce (''the Department'') is conducting an administrative review of the antidumping duty order on polyvinyl alcohol (''PVA'') from Taiwan. The period of review is May 1, 1997, through April 30, 1998.

We have preliminarily found that no sales of subject merchandise have been made below normal value. If these preliminary results are adopted in our final results of administrative review, we will instruct the Customs Service not to assess antidumping duties on entries subject to this review. Interested parties are invited to comment on these preliminary results. Parties who submit case briefs in this proceeding should provide a summary of the arguments not to exceed five pages and a table of statues, regulations, and case cited.

EFFECTIVE DATE: February 8, 1999.

FOR FURTHER INFORMATION CONTACT: Everett Kelly, at (202) 482–4194; or Brian Smith, at (202) 482–1766, Import Administration, International Trade Administration, U.S. Department of Commerce, 14th Street and Constitution Avenue, Washington, D.C. 20230.

SUPPLEMENTARY INFORMATION:

The Applicable Statute and Regulations

Unless otherwise indicated, all citations to the statute are references to the provisions effective January 1, 1995, the effective date of the amendments made to the Tariff Act of 1930, as amended (''the Act''), by the Uruguay Round Agreements Act (''URAA''). In addition, unless otherwise indicated, all references are made to the Department's final regulations at 19 CFR Part 351 (1998).

Case History

On May 14, 1996, the Department published in the **Federal Register** an antidumping duty order on polyvinyl alcohol from Taiwan. *See* 61 FR 24286. On May 12, 1997, the Department published a notice providing an opportunity to request an administrative review of this order for the period May 1, 1997, through April 30, 1998 (63 FR 26143). On May 27, 1998, we received a request for an administrative review from E.I. du Pont de Nemours & Co. (''DuPont''). On May 29, 1998, we received a request for a review from Chang Chun Petrochemical (''Chang Chun''). On May 29, 1998, the petitioner also requested reviews of Chang Chun and DuPont, and an additional review of Perry Chemical Corporation (''Perry''). On June 29, 1998, we published a notice of initiation of this review for Chang Chun and Dupont (63 FR 35188). We did not initiate a review of the importer Perry because we do not consider Perry to be a manufacturer or exporter of the subject merchandise based on the factors set forth in section 351.401(h) of the Department's regulations (*see Final Results of Antidumping Duty Administrative Review: Polyvinyl Alcohol from Taiwan,* 63 FR 32810, 32813 (June 16, 1998)).

On June 17, 1998, we issued an antidumping questionnaire to Chang Chun and Dupont. The Department received responses from the two companies in September and December 1998. We issued supplemental questionnaires to these companies in October 1998 and January 1999. Responses to these questionnaires were received in November 1998 and January 1999.

On July 24, 1998, Chang Chun requested that the Department clarify and confirm that the scope of the merchandise includes PVA ''hydrolyzed in excess of 85 percent whether or not mixed or diluted with defoamer or boric acid.'' In addition, Chang Chun requested that the Department confirm that the language in the scope of the order is still effective. Chang Chun contended that the language describing

the scope of subject merchandise covered by the antidumping order still controls the scope of review in this proceeding. Pursuant to Chang Chun's request, we confirmed that the scope of the merchandise includes PVA ''hydrolyzed in excess of 85 percent whether or not mixed or diluted with defoamer or boric acid.'' *See* ''Scope of Review'' section of this notice for confirmation of the scope of subject merchandise covered by the antidumping duty order and this review.

On August 26, 1998, DuPont requested that the Department apply the special rule set forth in 19 CFR 351.402(c) with respect to its further-manufactured sales in the United States. DuPont claimed that sales of non-further-manufactured subject merchandise should be used as ''proxy'' sales if the Department deems that there are a sufficient number of such sales to provide a reasonable basis for an accurate dumping margin calculation. Otherwise, DuPont stated that if the Department were to include the further-manufactured sales in its calculations, the results would be unreliable and inaccurate (*see* ''Further Manufactured Sales'' section below for further discussion).

On September 25, 1998, DuPont submitted further analysis in support of its contention that the Department should exclude its further-manufactured sales in the preliminary results.

On November 10, 1998, the Department preliminarily determined that the application of the special rule to DuPont's further-manufactured sales was not appropriate. (*See* Memorandum from the Team to Louis Apple dated November 10 , 1998 (''Special Rule Memo'').)

Scope of Review

The product covered by this review is PVA. PVA is a dry, white to cream-colored, water-soluble synthetic polymer. This product consists of polyvinyl alcohols hydrolyzed in excess of 85 percent, whether or not mixed or diluted with defoamer or boric acid. Excluded from this review are PVAs covalently bonded with acetoacetylate, carboxylic acid, or sulfonic acid uniformly present on all polymer chains in a concentration equal to or greater than two mole percent, and PVAs covalently bonded with silane uniformly present on all polymer chains in a concentration equal to or greater than one-tenth of one mole percent. PVA in fiber form is not included in the scope of this review.

The merchandise under review is currently classifiable under subheading 3905.30.00 of the *Harmonized Tariff Schedule of the United States* (''HTSUS''). Although the HTSUS subheading is provided for convenience and customs purposes, our written description of the scope is dispositive.

Period of Review

The period of review (''POR'') covers the period May 1, 1997, through April 30, 1998.

Fair Value Comparisons

To determine whether sales of the subject merchandise by the respondents to the United States were made at prices below normal value, we compared, where appropriate, the export price (''EP'') or constructed export price (''CEP'') to the normal value (''NV'') as described below. In accordance with section 777A(d)(2) of the Act, we compared, where appropriate, the EPs and CEPs of individual transactions to the monthly weighted-average price of sales of the foreign like product made in the ordinary course of trade.

Product Comparisons

In accordance with section 771(16) of the Act, we considered all products produced by Chang Chun and Dupont covered by the description in the ''Scope of the Review'' section, above, to be foreign like products for purposes of determining appropriate product comparisons to U.S. sales. We compared U.S. sales to sales made in the home market or third country, where appropriate, within the contemporaneous window period, which extends from three months prior to the month of the U.S. sale through two months after the month of the U.S. sale. Where there were no sales of identical merchandise in the home market or third country made in the ordinary course of trade to compare to U.S. sales, we compared U.S. sales to sales of the most similar foreign like product made in the ordinary course of trade. In making the product comparisons, we matched foreign like products based on the physical characteristics reported by the respondents in the following order: viscosity, hydrolysis, particle size, tackifier, defoamer, ash, color, volatiles, and visual impurities.

Export Price and Constructed Export Price

For the price to the United States, we used EP or CEP as defined in sections 772(a) and 772(b) of the Act, as appropriate.

We made company-specific adjustments as follows.

Chang Chun

In accordance with sections 772(a) and (c) of the Act, we calculated an EP for all of Chang Chun's sales, since the merchandise was sold to the first unaffiliated purchaser in the United States prior to importation, and CEP was not otherwise warranted based on the facts of record. We calculated EP based on the packed CIF price to unaffiliated purchasers in, or for exportation to, the United States. We made deductions from the starting price for movement expenses in accordance with section 772(c)(2)(A) of the Act; these expenses included domestic inland freight, foreign brokerage and handling, international freight, and marine insurance.

DuPont

We calculated CEP for all sales of subject merchandise, which were made in the United States after importation. We based CEP on packed FOB or delivered prices to unaffiliated purchasers in the United States. As appropriate, we made deductions for discounts and rebates. We also made deductions, where appropriate, for movement expenses in accordance with section 772(c)(2)(A) of the Act; these included U.S. brokerage and handling expenses, U.S. Customs duties (which include harbor maintenance and merchandise processing fees), U.S. warehousing expenses, and U.S. inland freight expenses (freight from port to warehouse and freight from warehouse to the customer).

In accordance with section 772(d)(1) of the Act, we deducted from CEP selling expenses associated with DuPont's economic activities occurring in the United States, including direct selling expenses and indirect selling expenses. We also deducted from CEP an amount for profit and further manufacturing costs in accordance with section 772(d)(3) and section 772(d)(2) of the Act, respectively.

DuPont's Further-Manufactured Sales

Dupont claims that the special rule set forth in section 772(e) of the Act should apply to its further-manufactured sales because the value added is above the Department's 65 percent threshold, and there are a sufficient number of sales of the subject merchandise with no value-added to use as ''proxy sales.'' Further, DuPont states that because of the way in which it reports costs associated with further manufacturing the subject merchandise, including its further-manufactured sales in the Department's dumping analysis would produce unreliable and inaccurate results.

Moreover, the exclusion of its further-manufactured sales from the Department's analysis would not appreciably affect the accuracy of the margin results, and that the burdens of preparing, reporting, and analyzing information for its further-manufactured sales would outweigh any gains from such an analysis. Therefore, DuPont requests that the Department exclude these further-manufactured sales and apply the ''Special Rule'' set forth in 19 CFR 351.402(c). Finally, Dupont notes in its Section E questionnaire response dated December 7, 1998, that if the Department finds that it must include the selling prices of the further-manufactured product in its margin calculation, it should compare the U.S. price of the further-manufactured product to the CV of that product. According to Dupont, this methodology would result in a more accurate and reliable margin calculation.

For the reasons stated in the November 10, 1998, Special Rule Memo, we disagree with DuPont that including the sales of the subject merchandise that is further-manufactured would necessarily produce unreliable or inaccurate results, or present a burden for the Department to calculate a margin using its normal methodology (*see* Special Rule Memo for further discussion). Because the purpose of section 772(e) is to reduce the administrative burden on the Department, the Department has the discretion to refrain from applying the special rule in circumstances where, as here, the value-added, while above the 65 percent threshold, is simple to calculate and does not present an administrative burden. Moreover, we do not agree with Dupont that applying our standard methodology will result in inaccurate and distortive results. However, we may revisit our preliminary decision to include the further-manufactured sales in our analysis based on our findings at verification.

Normal Value

In order to determine whether there was a sufficient volume of sales in the home market to serve as a viable basis for calculating NV, we compared each respondent's volume of home market sales of the foreign like product to the volume of U.S. sales of the subject merchandise, in accordance with section 773(a)(1)(C)(ii) of the Act. For Chang Chun, we determined that the quantity of foreign like product sold in the exporting country was sufficient to permit a proper comparison with the sales of the subject merchandise to the United States because Chang Chun had sales in its home market which were greater than five percent of its sales in the U.S. market. Therefore, in accordance with section 773(a)(1)(C) of the Act, we based NV on sales in Taiwan.

For DuPont, in accordance with section 773(a)(1)(B)(ii) and 773(a)(1)(C) of the Act and consistent with our practice, we based NV on the prices at which the foreign like products were first sold for consumption in the respondent's largest third-country market (*i.e.,* Australia) because DuPont did not have sales of the foreign like product in the exporting country during the POR and because Australia was a viable market with respect to DuPont's sales of PVA.

We made company-specific adjustments as follows.

Chang Chun

We calculated NV based on packed, FOB or delivered prices to unaffiliated purchasers in Taiwan. We made adjustments for differences in packing costs in accordance with section 773(a)(6)(A) and (B) of the Act. We also made adjustments, where appropriate, for movement expenses consistent with section 773(a)(6)(B) of the Act; these expenses included inland freight from plant to customer. In addition, we made adjustments for differences in cost attributable to differences in physical characteristics of the merchandise pursuant to section 773(a)(6)(C)(ii) of the Act, as well as for differences in circumstances of sale (''COS'') in accordance with section 773(a)(6)(C)(iii) of the Act and 19 C.F.R. 351.410. We made COS adjustments by deducting direct selling expenses incurred for home market sales (*i.e.,* credit expenses) and adding U.S. direct selling expenses (*i.e.,* credit expenses and bank charges).

DuPont

We calculated NV based on packed, delivered prices to unaffiliated purchasers in Australia. We made adjustments for movement expenses (*i.e.,* brokerage and handling fees, ocean freight, and inland freight) in accordance with section 773(a)(6)(B) of the Act. In addition, we made adjustments for differences in cost attributable to differences in physical characteristics of the merchandise pursuant to section 773(a)(6)(C)(ii) of the Act, as well as for differences in COS in accordance with section 773(a)(6)(C)(iii) of the Act and 19 C.F.R. 351.410. We made COS adjustments by deducting direct selling expenses incurred for third-country market sales (*i.e.,* credit expenses) and adding U.S. direct selling expenses (*i.e.,* credit expenses), where appropriate. Since DuPont was unable to separate packing expenses from its variable cost of manufacture, we made no adjustment for differences in packing expenses. As discussed below in the ''Level of Trade'' section, we allowed a CEP offset for comparisons made at different levels of trade. To calculate the CEP offset, we deducted from NV the third-country market indirect selling expenses (including inventory carrying costs), capped by the amount of the indirect selling expenses deducted in calculating the CEP under section 772(d)(1)(D) of the Act.

Level of Trade

In accordance with section 773(a)(1)(B) of the Act, to the extent practicable, we determined NV based on sales in the comparison market at the same level of trade (''LOT'') as the EP or CEP transaction. The NV LOT is that of the starting-price sales in the comparison market or, when NV is based on constructed value, that of the sales from which we derive selling, general and administrative expenses and profit. For EP, the LOT is also the level of the starting-price sale, which is usually from the exporter to the importer. For CEP, it is the level of the constructed export sale from the exporter to the affiliated importer.

To determine whether NV sales are at a different LOT than EP or CEP, we examine stages in the marketing process and selling functions along the chain of distribution between the producer and the customer. If the comparison-market sales are at a different LOT, and the difference affects price comparability, as manifested in a pattern of consistent price differences between the sales on which NV is based and comparison-market sales at the LOT of the export transaction, we make an LOT adjustment under section 773(a)(7)(A) of the Act. Finally, for CEP sales, if the NV level is more remote from the factory than the CEP level and there is no basis for determining whether the difference in the levels between NV and CEP affects price comparability, we adjust NV under section 773(a)(7)(B) of the Act (the CEP offset provision). *See Notice of Final Determination of Sales at Less Than Fair Value: Certain Cut-to-Length Carbon Steel Plate from South Africa,* 62 FR 61731 (November 19, 1997).

Chang Chun reported one channel of distribution for its U.S. and home market sales. Based on our analysis of the selling functions, we found that the selling activities performed in both the home market and the United States were similar. Therefore, we have found that sales in both markets are at the same

LOT and consequently no LOT adjustment is warranted.

DuPont reported one customer category and one channel of distribution for its third-country market sales. For its CEP sales to the United States, it reported three customer categories and three channels of distribution corresponding to each customer category. Based on our analysis, we found that all of its CEP sales comprise a single level of trade.

For Dupont's CEP sales, after making the appropriate deductions under the section 772(d) of the Act, we found that there are no selling expenses or functions associated with selling activities performed by Dupont that are reflected in the CEP price. In contrast, the NV LOT is more remote from the factory than the CEP LOT, and NV prices include the indirect selling expenses attributable to selling activities performed by DuPont for the third-country market such as sales support functions. Accordingly, we have concluded that CEP is at a different LOT from the third-country market LOT.

We then examined whether a LOT adjustment or CEP offset may be appropriate. In this case, DuPont only sold at one LOT in the third-country market; therefore, there is no information available to determine a LOT adjustment between LOTs with respect to the foreign like product. Further, we do not have information which would allow us to examine pricing patterns based on respondent's sales of other products, and there are no other respondents or other record information on which such an analysis could be based. Accordingly, because the data available do not provide an appropriate basis for making a LOT adjustment, but the LOT in the third-country is at a more advanced stage of distribution than the LOT of the CEP, we made a CEP offset adjustment in accordance with section 773(a)(7)(B) of the Act.

Cost of Production Analysis ("COP")

For Chang Chun, because we disregarded sales below the COP in the last completed segment of the proceeding (*i.e.*, the first administrative review), we had reasonable grounds to believe or suspect that sales of the foreign product under consideration for the determination of NV in this review may have been made at prices below the COP, as provided by section 773(b)(2)(A)(ii) of the Act. For DuPont, because DuPont had no sales below the COP in the last review, we did not initiate a COP investigation (*see* Policy Bulletin No. 94.1, Cost of Production—Standards for Initiation of Inquiry (March 25, 1994)). Therefore, pursuant to section 773(b)(1) of the Act, we initiated a COP investigation of sales by Chang Chun in the home market.

We conducted the COP analysis described below.

A. Calculation of COP

In accordance with section 773(b)(3) of the Act, we calculated the weighted-average COP, by grade, based on the sum of the cost of materials and fabrication, selling, general and administrative ("SG&A") expenses, and packing costs. For Chang Chun, we relied on the submitted COPs.

Chang Chun purchased a major input (*i.e.*, vinyl acetate monomer ("VAM")) for PVA from an affiliated party. Section 773(f)(3) of the Act indicates that, if transactions between affiliated parties involve a major input, then the Department may value the major input based on the COP if the cost is greater than the amount (higher of transfer price or market price) that would be determined under section 773(f)(2) of the Act. Section 773(f)(3) of the Act applies if the Department "has reasonable grounds to believe or suspect that an amount represented as the value of such input is less than the COP of such input." The Department generally finds that such "reasonable grounds" exist where it has initiated a COP investigation of the subject merchandise. *See Notice of Final Determination of Sales at Less Than Fair Value: Stainless Steel Wire Rod from Sweden*, 63 FR 40449, 40454 (July 29, 1998) (Comment 1).

Because a COP investigation is being conducted in this case, the Department requested in its Section D questionnaire that Chang Chun provide COP information for VAM. That cost information was provided by Chang Chun in its Section D response. For purposes of our analysis, we used the per-unit costs as reported by Chang Chun, which included the cost of VAM based on the transfer price, which is a higher price than the market price or its affiliate's COP.

B. Test of Home Market Prices

We compared the weighted-average COP for Chang Chun, adjusted where appropriate, to the comparison market sales of the foreign like product as required under section 773(b) of the Act, in order to determine whether these sales had been made at prices below the COP within an extended period of time in substantial quantities, and whether such prices were sufficient to permit the recovery of all costs within a reasonable period of time. On a grade-specific basis, we compared the COP to the comparison market prices, less any applicable movement charges, discounts, rebates, commissions and other direct and indirect selling expenses.

C. Results of the COP Test

Pursuant to section 773(b)(2)(C), where less than 20 percent of the respondent's sales of a given product were made at prices below the COP, we did not disregard any below-cost sales of that product because we determined that the below-cost sales were not made in "substantial quantities." Where 20 percent or more of the respondent's sales of a given product were made at prices below the COP, we disregarded the below-cost sales because such sales were found to be made within an extended period of time in "substantial quantities" in accordance with sections 773(b)(2)(B) and (C) of the Act, and because the below cost sales of the product were at prices which would not permit recovery of all costs within a reasonable period of time, in accordance with section 773(b)(2)(D) of the Act.

For Chang Chun, we found that certain comparison-market sales of PVA products were made at below-COP prices in substantial quantities within an extended period of time and at prices which would not permit recovery of costs within a reasonable period of time.

Preliminary Results of Review

As a result of this review, we preliminarily determine that the following margin exists for the period May 1, 1997, through April 30, 1998:

Manufacturer/exporter	Margin (percent)
Chang Chun Petrochemical Corporation	0.00
E.I. du Pont de Nemours & Co	0.00

Parties to the proceeding may request disclosure within five days of the date of publication of this notice. Any interested party may request a hearing within 30 days of publication. Any hearing, if requested, will be held 44 days after the date of publication or the first business day thereafter.

Issues raised in hearings will be limited to those raised in the respective case briefs and rebuttal briefs. Case briefs from interested parties and rebuttal briefs, limited to the issues raised in the respective case briefs, may be submitted not later than 30 days and 37 days, respectively, from the date of publication of these preliminary results. Parties who submit case briefs or rebuttal briefs in this proceeding are requested to submit with each argument (1) a statement of the issue and (2) a

brief summary of the argument. Parties are also encouraged to provide a summary of the arguments not to exceed five pages and a table of statutes, regulations and cases cited.

The Department will subsequently issue the final results of this administrative review, including the results of its analysis of issues raised in any such written briefs or at the hearing, if held, not later than 120 days after the date of publication of this notice.

Interested parties who wish to request a hearing or to participate if one is requested, must submit a written request to the Assistant Secretary for Import Administration, Room B–099, within 30 days of the date of publication of this notice. Requests should contain: (1) the party's name, address and telephone number; (2) the number of participants; and (3) a list of issues to be discussed.

Cash Deposit and Assessment Requirements

The following deposit requirements will be effective upon publication of the final results of this antidumping duty review for all shipments of PVA from Taiwan, entered or withdrawn from warehouse, for consumption on or after the publication date, as provided by section 751(a) of the Act: (1) the cash deposit rates for the reviewed companies will be those established in the final results of this review; (2) for exporters not covered in this review, but covered in the LTFV investigation or prior reviews, the cash deposit rate will continue to be the company-specific rate from the LTFV investigation or the prior review; (3) if the exporter is not a firm covered in this review, a prior review, or the original LTFV investigation, but the manufacturer is, the cash deposit rate will be the rate established for the most recent period for the manufacturer of the merchandise; and (4) the cash deposit rate for all other manufacturers or exporters will continue to be 19.21 percent, the ''All Others'' rate made effective by the LTFV investigation. These requirements, when imposed, shall remain in effect until publication of the final results of the next administrative review.

The Department shall determine and the Customs Service shall assess antidumping duties on all appropriate entries. The Department will issue appropriate appraisement instructions directly to the Customs Service upon completion of this review. The final results of this review shall be the basis for the assessment of antidumping duties on entries of merchandise covered by this review and for future deposits of estimated duties. We will instruct the Customs Service to assess antidumping duties on all appropriate entries covered by this review if any importer-specific assessment rate calculated in the final results of this review is above *de minimis.* For Chang Chun, for duty assessment purposes, we will calculate importer-specific assessment rates by aggregating the dumping margins calculated for all U.S. sales to each importer and dividing this amount by the total entered value of the same sales. In order to estimate the entered value, we will subtract international movement expenses from the gross sales value. For DuPont, we will calculate an assessment rate by aggregating the dumping margins calculated for all U.S. sales examined and dividing this amount by the total entered value of the sales examined

This notice serves as a preliminary reminder to importers of their responsibility under 19 CFR 351.402(f)(2) to file a certificate regarding the reimbursement of antidumping duties prior to liquidation of the relevant entries during this review period. Failure to comply with this requirement could result in the Secretary's presumption that reimbursement of antidumping duties occurred and the subsequent assessment of double antidumping duties.

This administrative review and notice are in accordance with sections 751(a)(1) of the Act and 19 CFR 351.213.

Dated: February 1, 1999.

Robert S. LaRussa,

Assistant Secretary for Import Administration.

[FR Doc. 99–2996 Filed 2–5–99; 8:45 am]

BILLING CODE 3510–DS–P

DEPARTMENT OF COMMERCE

International Trade Administration

[A–533–502]

Notice of Preliminary Results of the Antidumping Duty Administrative Review: Certain Welded Carbon Steel Pipes and Tubes From India

AGENCY: Import Administration, International Trade Administration, Department of Commerce.

SUMMARY: In response to requests from interested parties, the Department of Commerce is conducting an administrative review of the antidumping duty order on certain welded carbon steel pipes and tubes from India. This review covers one manufacturer/exporter, Rajinder Pipes Ltd. The period of review is May 1, 1997, through April 30, 1998.

We have preliminarily determined that respondent's margin should be based on total adverse facts available. If these preliminary results are adopted in our final results of administrative review, we will instruct the Customs Service to assess antidumping duties based on the selected adverse facts-available rate.

We invite interested parties to comment on these preliminary results. Parties who submit comments in this proceeding are requested to submit with each argument (1) a statement of the issue and (2) a brief summary of the argument.

EFFECTIVE DATE: February 8, 1999.

FOR FURTHER INFORMATION CONTACT: Larry Tabash at (202) 482–5047 or Robin Gray at (202) 482–4023, Import Administration, International Trade Administration, U.S. Department of Commerce, 14th and Constitution Avenue, N.W., Washington, D.C. 20230.

SUPPLEMENTARY INFORMATION:

The Applicable Statute

Unless otherwise indicated, all citations to the Tariff Act of 1930, as amended (the Act), are references to the provisions effective January 1, 1995, the effective date of the amendments made to the Act by the Uruguay Round Agreements Act. In addition, unless otherwise indicated, all citations to the Department of Commere's (the Department's) regulations are to 19 CFR Part 351 (1998).

Case History

On June 29, 1998, the Department published in the **Federal Register** (63 FR 35188) the antidumping duty order on certain welded carbon steel pipes and tubes from India. In accordance with 19 CFR 351.213, we published a notice of initiation of administrative review of this antidumping duty order for the period May 1, 1997, through April 30, 1998. This review covers one manufacturer/exporter, Rajinder Pipes Ltd. (Rajinder). The Department is conducting this administrative review in accordance with section 751(a) of the Act.

On September 17, 1998, the petitioners alleged that Rajinder made home-market sales of subject merchandise at prices below the cost of production (COP). On October 19, 1998, we concluded that petitioners' allegation provided us with reasonable grounds to believe or suspect that Rajinder made below-cost sales in the home market within the meaning of section 773(2)(a)(i) of the Act. Therefore, we initiated a COP investigation of Rajinder's home-market sales. On

October 21, 1998, we instructed Rajinder to respond to section D of the original questionnaire, which requests cost information for the period currently under review. Despite numerous extensions, Rajinder did not provide the requested cost information.

Scope of Review

The products covered by this review include circular welded non-alloy steel pipes and tubes, of circular cross-section, with an outside diameter of 0.372 inches or more but not more than 406.4 millimeters (16 inches) in outside diameter, regardless of wall thickness, surface finish (black, galvanized, or painted), or end finish (plain end, beveled end, threaded, or threaded and coupled). These pipes and tubes are generally known as standard pipe, though they may also be called structural or mechanical tubing in certain applications. Standard pipes and tubes are intended for the low-pressure conveyance of water, steam, natural gas, air and other liquids and gases in plumbing and heating systems, air-conditioner units, automatic sprinkler systems, and other related uses. Standard pipe may also be used for light load-bearing and mechanical applications, such as for fence tubing, and for protection of electrical wiring, such as conduit shells.

The scope is not limited to standard pipe and fence tubing or those types of mechanical and structural pipe that are used in standard pipe applications. All carbon-steel pipes and tubes within the physical description outlined above are included in the scope of this order, except for line pipe, oil-country tubular goods, boiler tubing, cold-drawn or cold-rolled mechanical tubing, pipe and tube hollows for redraws, finished scaffolding, and finished rigid conduit.

Imports of the products covered by this review are currently classifiable under the following Harmonized Tariff Schedule subheadings: 61032, 61049, 7306.30.10, and 7306.30.50. Although, the HTS item numbers are provided for convenience and customs purposes, the Department's written description of the scope of this proceeding remains dispositive.

Use of Facts Otherwise Available

Because Rajinder has not provided the requested cost information and has not provided record evidence substantiating its reasons for not responding to our questionnaire, Rajinder has precluded us from conducting an analysis to determine whether its comparison-market (India) sales prices were below their respective COP in substantial quantities and over an extended period of time. Accordingly, we believe that we must resort to total facts available.

Section 776(a) of the Act provides that, if an interested party fails to provide information requested by the Department by the deadlines for submission of the information or in the form and manner requested, the Department shall use the facts otherwise available in reaching the applicable determination under this title. In this review, as described below, Rajinder failed to provide a response to our COP questionnaire by the established deadline.

Section 782(e) of the Act provides that the Department shall not decline to consider whether the information submitted by the respondent that is already on the record is usable. The information that Rajinder failed to provide would have been the first comprehensive cost information to be used in the Department's cost investigation. Thus, the information currently on the record is so incomplete that it cannot serve as a reliable basis for reaching preliminary results (*see Elemental Sulphur From Canada: Preliminary Results of Antidumping Duty Administrative Review,* 62 FR 969 (January 7, 1997)). Therefore, in accordance with section 776(a) of the Act and 19 CFR 351.308 (a), we must use facts otherwise available.

In selecting facts otherwise available, section 776(b) of the Act authorizes the Department to use an adverse inference if the Department finds that an interested party failed to cooperate by not acting to the best of its ability to comply with requests for information. In the instant review, Rajinder submitted five extension requests in response to the original deadline issued for submission of its section D questionnaire response. The reasons cited for the extension requests changed over time. Initially, the company cited several reasons for not submitting its section D response including preparation of year-end reports, problems with the telephone lines, and insufficient staff. In the last two extension requests, Rajinder cited a claim of labor unrest which Rajinder failed to substantiate. Even in light of these extensions, Rajinder ultimately failed to submit the relevant cost information for the record of this review. Therefore, we have determined that Rajinder has failed to cooperate by not acting to the best of its ability to comply with our request for information for this review. Consequently, pursuant to section 776(b) of the Act, the Department may use adverse inferences when selecting from among the facts otherwise available.

The Department's practice when selecting an adverse rate from among the possible sources of information has been to ensure that the margin is sufficiently adverse ''as to effectuate the purpose of the facts available rule to induce respondents to provide the Department with complete and accurate information in a timely manner.'' *See Static Random Access Memory Semiconductors From Taiwan; Final Determination of Sales at Less Than Fair Value,* 63 FR 8909, 8932 (February 23, 1998). The Department will also consider the extent to which a party may benefit from its own lack of cooperation in selecting a rate. *See Roller Chain Other Than Bicycle, From Japan; Notice of Final Results and Partial Recission of Antidumping Duty Administrative Review,* 62 FR 69,472, 60477 (November 10, 1997), and *Certain Welded Carbon Steel Pipes and Tubes from Thailand: Final Results of Antidumping Administrative Review,* 62 FR 53808, 53820–21 (October 16, 1997).

In order to ensure that the rate is sufficiently adverse so as to induce Rajinder's cooperation, we have assigned to Rajinder as adverse facts available a rate of 87.39 percent, the highest rate calculated for any respondent for any segment of this proceeding. This rate was calculated for the 88/89 administrative review of this order. Although Rajinder asked that we use old cost data as facts available for this review, because we do not have any information concerning Rajinder's current costs, we cannot determine if its old cost data would be sufficiently adverse for use as facts available. Therefore, we have not used it.

Section 776(c) of the Act directs the Department to corroborate, to the extent practicable, secondary information used as facts available. To corroborate secondary information, the Department will, to the extent practicable, examine the reliability and relevance of the information used. However, unlike other types of information, such as input costs or selling expenses, there are no independent sources for calculated dumping margins. The only source for margins is an administrative determination. Thus, in an administrative review, if the Department chooses as total adverse facts available a calculated dumping margin from a prior segment of the proceeding, it is not necessary to question the reliability of the margin from that time period. *See, e.g., Elemental Sulphur from Canada: Preliminary Results of Antidumping Duty Administrative Review,* 62 FR at 971 (January 7, 1997), and *Antifriction Bearings (Other than Tapered Roller Bearings) and Parts Thereof from*

France, et al, 62 FR 2801 (January 15, 1997).

As to the relevance of the margin used for adverse facts available, the Department stated in *Tapered Roller Bearings from Japan; Final Results of Antidumping Duty Administrative Review,* 62 FR 47454 (September 9, 1997), that it will consider information reasonably at its disposal as to whether there are circumstances that would render a margin irrelevant. Where circumstances indicate that the selected margin is not appropriate as adverse facts available, the Department will disregard the margin and determine an appropriate margin. *See also, Fresh Cut Flowers from Mexico; Preliminary Results of Antidumping Duty Administrative Review,* 60 FR 49567 (September 26, 1995). We have determined that there is no evidence which would indicate that the rate is irrelevant or inappropriate as an adverse facts available rate for Rajinder in the instant review. Therefore, we have applied, as total adverse facts available, the 87.39 percent margin from the 1988/89 administrative review.

For more detailed information on the use, selection, and corroboration of facts available, please see the January 28, 1999, decision memorandum from Laurie Parkhill to Richard W. Moreland, which is available in the Central Records Unit, Import Administration, B–099, Main Commerce Building, Washington, DC, 20230.

Preliminary Results of the Review

As a result of this review, we preliminarily determine the weighted-average dumping margin (in percent) for the period May 1, 1997, through April 30, 1998, to be as follows.

Company

Rajinder Pipes Ltd.—87.39

Any interested party may request a hearing within 30 days of publication. Any hearing, if requested, will be held 37 days after the publication of this notice, or the first workday thereafter. Issues raised in hearings will be limited to those raised in the respective case and rebuttal briefs. Interested parties may submit case briefs within 30 days of the date of publication of this notice. Rebuttal briefs, which must be limited to issues raised in the case briefs, may be filed not later than 35 days after the date of publication of this notice.

Parties who submit case briefs or rebuttal briefs in this proceeding are requested to submit with each argument (1) a statement of the issue and (2) a brief summary of the argument with an electronic version included. The Department will publish the final results of this administrative review subsequently, including the results of its analysis of issues raised in any such written briefs or hearing. The Department will issue final results of this review within 120 days of publication of these preliminary results.

The Department shall determine, and the Customs Service shall assess, antidumping duties on all appropriate entries. The Department will issue appraisement instructions directly to the Customs Service. The final results of this review shall be the basis for the assessment of antidumping duties on entries of merchandise covered by the review.

Furthermore, the following deposit requirements will be effective for all shipments of the subject merchandise entered, or withdrawn from warehouse, for consumption on or after the date of publication of the final results of this administrative review, as provided by section 751(a)(1) of the Tariff Act: (1) The cash-deposit rate for the reviewed company will be the rate established in the final results of this review; (2) for previously reviewed or investigated companies not listed above, the cash-deposit rate will continue to be the company-specific rate published for the most recent period; (3) if the exporter is not a firm covered in this review, a prior review, or the original less-than-fair-value (LTFV) investigation, but the manufacturer is, the cash-deposit rate will be the rate established for the most recent period for the manufacturer of the merchandise; and (4) the cash-deposit rate for all other manufacturers or exporters will continue to be 7.08 percent, the ''All Others'' rate made effective by the final determination of sales at LTFV, as explained in the 1995/96 new shipper review of this order. *See Certain Welded Carbon Standard Steel Pipes and Tubes From India; Final Results of New Shipper Antidumping Duty Administrative Review,* 62 FR 47632, 47644 (September 10, 1997).

These deposit requirements, when imposed, shall remain in effect until publication of the final results of the next administrative review.

This notice also serves as a reminder to importers of their responsibility under 19 CFR 351.402(f) to file a certificate regarding the reimbursement of antidumping duties prior to liquidation of the relevant entries during this review period. Failure to comply with this requirement could result in the Department's presumption that reimbursement of antidumping duties occurred and the subsequent assessment of double antidumping duties.

We are issuing and publishing this determination in accordance with sections 751(a)(1) and 777(i)(1) of the Act.

Dated: February 1, 1999.

Robert S. LaRussa,

Assistant Secretary for Import Administration.

[FR Doc. 99–2998 Filed 2–5–99; 8:45 am]

BILLING CODE 3510–DS–P

DEPARTMENT OF COMMERCE

National Oceanic and Atmospheric Administration

[I.D. 020299E]

New England Fishery Management Council; Public Meetings

AGENCY: National Marine Fisheries Service (NMFS), National Oceanic and Atmospheric Administration (NOAA), Commerce.

ACTION: Public meeting.

SUMMARY: The New England Fishery Management Council (Council) is scheduling a public meeting of its Scientific and Statistical Committee (SSC) in February, 1999 to consider actions affecting New England fisheries in the exclusive economic zone (EEZ). Recommendations from this group will be brought to the full Council for formal consideration and action, if appropriate.

DATES: The meeting will be held on Tuesday, February 23, 1999. See **SUPPLEMENTARY INFORMATION** for specific dates and times.

ADDRESSES: The meeting will be held in Peabody, MA. See **SUPPLEMENTARY INFORMATION** for specific location.

FOR FURTHER INFORMATION CONTACT: Paul J. Howard, Executive Director, New England Fishery Management Council (781) 231–0422. Requests for special accommodations should be addressed to the New England Fishery Management Council, 5 Broadway, Saugus, Massachusetts 01906–1036; telephone: (781) 231–0422.

SUPPLEMENTARY INFORMATION:

Meeting Dates and Agendas

Tuesday, February 23, 1999, 9:30 a.m.—Scientific and

Statistical Committee Meeting

Location: Holiday Inn, One Newbury Street, Peabody, MA 01960; telephone: (978) 535–4600.

Agenda: The SSC will evaluate the adequacy of scallop biomass and yield estimates, data on groundfish bycatch, and habitat information for developing management options to allow fishing for scallops in the groundfish closed areas.

Although other issues not contained in this agenda may come before this Committee for discussion, in accordance with the Magnuson-Stevens Fishery Conservation and Management Act, those issues may not be the subject for formal action during this meeting. Action will be restricted to those issues specifically listed in this notice.

Special Accommodations

This meeting is physically accessible to people with disabilities. Requests for sign language interpretation or other auxiliary aids should be directed to Paul J. Howard (see **ADDRESSES**) at least 5 days prior to the meeting date.

Dated: February 3, 1999.

Richard W. Surdi,

Acting Director, Office of Sustainable Fisheries, National Marine Fisheries Service.

[FR Doc. 99–2994 Filed 2–5–99; 8:45 am]

BILLING CODE 3510–22–F

DEPARTMENT OF COMMERCE

National Oceanic and Atmospheric Administration

[I.D. 020299A]

Western Pacific Fishery Management Council; Public Meetings

AGENCY: National Marine Fisheries Service (NMFS), National Oceanic and Atmospheric Administration (NOAA), Commerce.

ACTION: Notice of public meetings.

SUMMARY: The Western Pacific Fishery Council (Council) will hold separate meetings of its Ecosystem and Habitat Advisory Panel (EHAP) and its Coral Reef Ecosystem Plan Team (CREPT) in Honolulu, Hawaii.

DATES: The EHAP meeting will be held on February 22–23, 1999, from 9:00 a.m. to 5:00 p.m., on February 22, and from 8:00 a.m. to 12:00 noon on February 23. The CREPT meeting will be held on February 24–26, 1999, from 8:30 a.m. to 5:00 p.m., each day.

ADDRESSES: Both meetings will be held at the Council's conference room, 1164 Bishop St., Suite 1400, Honolulu, Hawaii; telephone: (808–522–8220).

Council address: Western Pacific Fishery Management Council, 1164 Bishop St., Suite 1400, Honolulu, HI, 96813.

FOR FURTHER INFORMATION CONTACT: Kitty M. Simonds, Executive Director; telephone 808–522–8220.

SUPPLEMENTARY INFORMATION: The EHAP and CREPT will discuss and may make recommendations to the Council on the agenda items below; however, the order in which agenda items will be addressed may change.

Monday, February 22, 1999, 9:00 a.m.

A. Summary of recent activities

(1) Hawaii Humpback Whale National Marine Sanctuary
(2) Marine & Coastal Zone Management Advisory Group (MACZMAG)
(3) President's Ocean Initiative (NOAA priorities)

B. Refinement of Essential Fish Habitat (EFH)

(1) Summary of EFH designations for Bottomfish, Crustaceans, Pelagics and Precious Corals FMPs
(2) EFH needs of developing Coral Reef Ecosystem FMP
(3) Fishing gear impacts to EFH
(4) Non-fishing impacts to EFH
(5) Habitat Areas of Particular Concern (HACPs)
(6) EFH consultation process
(7) Mapping of EFH, including the Global Information System
(8) Magnuson-Stevens Fishery Conservation and Management Act (Magnuson-Stevens) reauthorization of EFH mandate
(9) Council's EFH-related funding needs

C. Marine debris from fisheries impacting habitat

Review of problem

D. Fishery interactions with monk seals

(1) Northwestern Hawaiian Islands (NWHI) lobster fishery
(2) NWHI precious coral fishery
(3) Hawaii bottomfish fishery

E. Program Plan (Milestones)

Review of revised version

Tuesday, February 23, 1999, 8:00 a.m.

Draft coral reef ecosystem FMP

Review of preliminary draft

Wednesday, February 24, 1999, 8:30 a.m.

(1) Reports on recent meetings
(2) Draft Coral Reef Ecosystem FMP

Fishery management program (section outlines are in parentheses, below)

(1) Problems for resolution (2.1)
(2) Management objectives (2.2)
(3) Management unit (2.3)
(4) Habitat issues (2.4)
(5) Management alternatives (2.5)
(6) Reef resource development (2.6)
(7) Impact of management options (2.7)
(8) Recommended management measures (2.8)

Thursday, February 25, 1999, 8:30 a.m.

Cost/benefit analysis of proposed measures

(1) Ecological impacts of management options (3.1)

(2) Economic impacts of management options (3.2)

(3) Social impacts of management options (3.3)

Friday, February 26, 1999, 8:30 a.m.

A. Supporting information

(1) Description of management unit ''stocks'' (4.1)

(2) Description of habitat of management unit ''stocks'' (4.2)

(3) Description of fishing affecting management unit ''stocks'' (4.3)

(4) Description of economic characteristics (4.4)

(5) Description of socioeconomic aspects of fishing industries/communities (4.5)

(6) Description of social and cultural framework of fishing industries/communities (4.6)

B. Possible refinements of FMP outline

(1) Assignments for next iteration of draft FMP

(2) Timetable for completion of next iteration

C. Coral reef funding priorities

(1) Assessment and monitoring

(2) Research

D. Scheduling of next meeting

Although other issues not contained in this agenda may come before the EHAP and CREPT for discussion, in accordance with the Magnuson-Stevens Act, those issues may not be the subject of formal action during these meetings. Action will be restricted to those issues specifically identified in the agenda listed in this notice.

Special Accommodations

This meeting is physically accessible to people with disabilities. Requests for sign language interpretation or other auxiliary aids should be directed to Kitty M. Simonds, 808–522–8220 (voice) or 808–522–8226 (fax), at least 5 days prior to meeting date.

Dated: February 2, 1999.

Gary C. Matlock,

Director, Office of Sustainable Fisheries, National Marine Fisheries Service.

[FR Doc. 99–2995 Filed 2–5–99; 8:45 am]

BILLING CODE 3510–22–F

DEPARTMENT OF COMMERCE

Technology Administration

[Docket No. 980529140–9024–02]

Cooperation Between the Technology Administration of the United States Department of Commerce and the Ministry of Science and Technology of the People's Republic of China; Civil Industrial Technology Coordinating Committee

AGENCY: Technology Administration, U.S. Department of Commerce.

ACTION: Notice: Re-opening of time for requests for nominations for the coordinating committee.

SUMMARY: The Technology Administration invites nominations of individuals for appointment to the Civil Industrial Technology Coordinating Committee established under the Implementing Arrangement Concerning Cooperation in Civil Industrial Technology between the U.S. Department of Commerce and the Peoples' Republic of China's Ministry of Science and Technology. The Technology Administration will consider all nominations received in response to this notice of appointment to the Committee.

DATES: Please submit nominations on or before March 19, 1999.

ADDRESSES: Please submit nominations for the United States-China Civil Industrial Technology Coordinating Committee to Phyllis Yoshida, Office of Technology Policy, Technology Administration, Department of Commerce, Room 4411, Washington, DC 20230. Nominations may also be submitted by fax to 202–219–3310.

FOR FURTHER INFORMATION CONTACT: Phyllis Yoshida, telephone 202–482–1287; fax 202–219–3310; e-mail Phyllis__Yoshida@ta.doc.gov.

SUPPLEMENTARY INFORMATION: On November 12, 1998, the Department of Commerce published a notice in the **Federal Register** requesting nominations for Committee created under a memorandum of understanding with China. This **Federal Register** notice was published on November 12, 1998 (63 FR 63294). The notice provides additional information on the goal of the agreement, the scope of the proposed activities, and relevant information on the Committee, including the functions of the members of the bodies and membership criteria and requirements. Nominations were requested on or before January 8, 1999. Because this notice was published shortly before a major U.S. holiday and extended through other holidays, the time for submission of nominations is being extended through March 19, 1999 to allow for further public dissemination and consideration.

Kelly H. Carnes,

Deputy Assistant Secretary for Technology Policy.

[FR Doc. 99–2763 Filed 2–5–99; 8:45 am]

BILLING CODE 3510–18–P

DEPARTMENT OF COMMERCE

Technology Administration

[Docket No. 980529139–9025–02]

The United States-Greek Initiative for Technology Cooperation with the Balkans; Joint Science and Technology Cooperation Council; Cooperation Between the Technology Administration of the United States Department of Commerce and the Industrial Research and Technology Unit of the Northern Ireland Department of Economic Development Joint Board on Scientific and Technological Cooperation

AGENCY: Technology Administration, U.S. Department of Commerce.

ACTION: Notice: Re-opening of time for requests for nominations for the Joint Council and the Joint Board.

SUMMARY: The Technology Administration invites nominations of individuals to appointment to the Joint Science and Technology Cooperation Council established under a Memorandum of Understanding on technology cooperation between the United States Department of Commerce and the Greek Ministry of National Economy concerning technology cooperation with the Balkans and the appointment to the Joint Board on Scientific and Technological Cooperation established under a Memorandum of Understanding on technology cooperation between the Technology Administration of the Department of Commerce and the Northern Ireland Industrial Research and Technology Unit. The Technology Administration will consider all nominations received in response to this notice of appointment to the two joint bodies.

DATES: Please submit nominations on or before February 26, 1999.

ADDRESSES: Please submit nominations for the United States-Greece Joint Council and the United States-Northern Ireland Joint Board to Cathy Campbell, Director, Office of International Technology Policy and Programs, Office of Technology Policy, Technology Administration, Department of Commerce, Room 4821, Washington, DC 20230.

FOR FURTHER INFORMATION CONTACT: Cathy Campbell, telephone 202–482–6351; fax 202–501–6849; e-mail Cathy__Campbell@ta.doc.gov.

SUPPLEMENTARY INFORMATION: On November 12, 1998, the Department of Commerce published two notices in the **Federal Register** requesting nominations for two joint bodies created under various memorandums of understanding or other agreements with Greece and Northern Ireland. This **Federal Register** notice was published on November 12, 1998 (63 FR 63294). The notices provide additional information on the goals of the agreements, the scope of the activities contemplated under them, and relevant information on the joint bodies, including the functions of the members of the bodies and membership criteria and requirements. Nominations were requested on or before January 8, 1998. Because the notices were published shortly before a major U.S. holiday and extended through other holidays, the time for submission of nominations is being extended through February 26, 1999 to allow for further public dissemination and consideration.

Kelly H. Carnes,

Deputy Assistant Secretary for Technology Policy.

[FR Doc. 99–2764 Filed 2–5–99; 8:45 am]

BILLING CODE 3510–18–P

COMMITTEE FOR THE IMPLEMENTATION OF TEXTILE AGREEMENTS

Establishment of Import Restraint Limits for Certain Cotton, Wool and Man-Made Fiber Textile Products Produced or Manufactured in Cambodia

February 1, 1999.

AGENCY: Committee for the Implementation of Textile Agreements (CITA).

ACTION: Issuing a directive to the Commissioner of Customs establishing limits.

EFFECTIVE DATE: February 10, 1999.

FOR FURTHER INFORMATION CONTACT: Roy Unger, International Trade Specialist, Office of Textiles and Apparel, U.S. Department of Commerce, (202) 482–4212. For information on the quota status of these limits, refer to the Quota Status Reports posted on the bulletin boards of each Customs port, call (202)

927–5850, or refer to the U.S. Customs website at http://www.customs.ustreas.gov. For information on embargoes and quota re-openings, call (202) 482–3715.

SUPPLEMENTARY INFORMATION:

Authority: Section 204 of the Agricultural Act of 1956, as amended (7 U.S.C. 1854); Executive Order 11651 of March 3, 1972, as amended.

Pursuant to the bilateral textile agreement of January 20, 1999, the Governments of the United States and Cambodia agreed to limits for certain cotton, wool and man-made fiber textile products, produced or manufactured in Cambodia and exported to the United States during three one-year periods beginning on January 1, 1999 and extending through December 31, 2001. This directive cancels and supersedes the previous limits for Categories 331/631 set forth in **Federal Register** notice 63 FR 57666 published on October 28, 1998; and 338/339 and 345 set forth in **Federal Register** notice 63 FR 71620 published on December 29, 1998.

In the letter published below, the Chairman of CITA directs the Commissioner of Customs to establish the 1999 limits.

These limits may be revised if Cambodia becomes a member of the World Trade Organization (WTO) and the United States applies the WTO agreement to Cambodia. limits.

A description of the textile and apparel categories in terms of HTS numbers is available in the CORRELATION: Textile and Apparel Categories with the Harmonized Tariff Schedule of the United States (see **Federal Register** notice 63 FR 71096, published on December 23, 1998).

Troy H. Cribb,

Chairman, Committee for the Implementation of Textile Agreements.

Committee for the Implementation of Textile Agreements

February 1, 1999.

Commissioner of Customs,

Department of the Treasury, Washington, DC 20229.

Dear Commissioner: Pursuant to section 204 of the Agricultural Act of 1956, as amended (7 U.S.C. 1854); and Executive Order 11651 of March 3, 1972, as amended; and the Bilateral Textile Agreement of January 20, 1999 between the Governments of the United States and Cambodia. This directive cancels and supersedes the directives issued to you on October 22, 1998 and December 22, 1998, by the Chairman, Committee for the Implementation of Textile Agreements. These directives concern imports of certain cotton and man-made fiber textile products, produced or manufactured in Cambodia and exported during the period which began on October 29, 1998 and extends through October 28, 1999 (Categories 331/631) and the period which began on October 28, 1998 and extends through October 27, 1999 (Categories 338/339 and 345).

Furthermore, you are directed to prohibit, effective on February 10, 1999, entry into the United States for consumption and withdrawal from warehouse for consumption of cotton, wool and man-made fiber textile products in the following categories, produced or manufactured in Cambodia and exported during the twelve-month period which began on January 1, 1999 and extends through December 31, 1999, in excess of the following levels of restraint:

Category	Twelve-month limit [1]
331/631	1,550,000 dozen pairs.
334/634	170,000 dozen.
335/635	65,000 dozen.
338/339	2,500,000 dozen.
340/640	750,000 dozen.
345	94,000 dozen.
347/348/647/648	3,000,000 dozen.
352/652	600,000 dozen.
438	90,000 dozen.
445/446	110,000 dozen.
638/639	900,000 dozen.
645/646	250,000 dozen.

[1] These limits have not been adjusted to account for any imports exported after December 31, 1998.

The limits set forth above are subject to adjustment pursuant to the current bilateral agreement between the Governments of the United States and Cambodia.

Textile products in the above categories which have been exported to the United States prior to January 1, 1999 shall not be subject to this directive.

Textile products in those same categories which have been released from the custody of the U.S. Customs Service nunder the provisions of 19 U.S.C. 1448(b) or 1484(a)(1) prior to the effective date of this directive shall not be denied entry under this directive.

These limits may be revised if Cambodia becomes a member of the World Trade Organization (WTO) and the United States applies the WTO agreement to Cambodia.

Import charges will be provided at a later date.

In carrying out the above directions, the Commissioner of Customs should construe entry into the United States for consumption to include entry for consumption into the Commonwealth of Puerto Rico.

The Committee for the Implementation of Textile Agreements has determined that these actions fall within the foreign affairs exception of the rulemaking provisions of 5 U.S.C. 553(a)(1).

Sincerely,

Troy H. Cribb,

Chairman, Committee for the Implementation of Textile Agreements.

[FR Doc. 99–2879 Filed 2–5–99; 8:45 am]

BILLING CODE 3510–DR–F

COMMITTEE FOR THE IMPLEMENTATION OF TEXTILE AGREEMENTS

Adjustment of an Import Limit for Certain Cotton and Man-Made Fiber Textile Products Produced or Manufactured in El Salvador

February 1, 1999.

AGENCY: Committee for the Implementation of Textile Agreements (CITA).

ACTION: Issuing a directive to the Commissioner of Customs increasing a limit.

EFFECTIVE DATE: February 10, 1999.

FOR FURTHER INFORMATION CONTACT: Naomi Freeman, International Trade Specialist, Office of Textiles and Apparel, U.S. Department of Commerce, (202) 482–4212. For information on the quota status of this limit, refer to the Quota Status Reports posted on the bulletin boards of each Customs port, call (202) 927–5850, or refer to the U.S. Customs website at http://www.customs.ustreas.gov. For information on embargoes and quota re-openings, call (202) 482–3715.

SUPPLEMENTARY INFORMATION:

Authority: Section 204 of the Agricultural Act of 1956, as amended (7 U.S.C. 1854); Executive Order 11651 of March 3, 1972, as amended.

The current limit for Categories 342/642 is being increased for carryover.

A description of the textile and apparel categories in terms of HTS numbers is available in the CORRELATION: Textile and Apparel Categories with the Harmonized Tariff Schedule of the United States (see **Federal Register** notice 63 FR 71096, published on December 23, 1998). Also see 63 FR 70108, published on December 18, 1998.

Troy H. Cribb,

Chairman, Committee for the Implementation of Textile Agreements.

Committee for the Implementation of Textile Agreements

February 1, 1999.

Commissioner of Customs,

Department of the Treasury, Washington, DC 20229.

Dear Commissioner: This directive amends, but does not cancel, the directive issued to you on December 14, 1998, by the Chairman, Committee for the Implementation of Textile Agreements. That directive concerns imports of certain cotton and man-made fiber textile products, produced or manufactured in El Salvador and exported during the period which began on January 1, 1999 and extends through March 28, 1999.

Effective on February 10, 1999, you are directed to increase the current limit for

Categories 342/642 to 99,427 dozen [1], as provided for under the Uruguay Round Agreement on Textiles and Clothing.

The guaranteed access level for Categories 342/642 remains unchanged.

The Committee for the Implementation of Textile Agreements has determined that this action falls within the foreign affairs exception of the rulemaking provisions of 5 U.S.C. 553(a)(1).

Sincerely,

Troy H. Cribb,

Chairman, Committee for the Implementation of Textile Agreements.

[FR Doc. 99–3000 Filed 2–5–99; 8:45 am]

BILLING CODE 3510–DR–F

[1] The limit has not been adjusted to account for any imports exported after December 31, 1998.

CONSUMER PRODUCT SAFETY COMMISSION

Identification of Purchasers of Certain Products; Public Forum

AGENCY: Consumer Product Safety Commission.

ACTION: Notice of public forum.

SUMMARY: On March 23, 1999, the Consumer Product Safety Commission (''CPSC'') staff will convene a public forum to explore how recall effectiveness could be enhanced by increased efforts to identify purchasers of consumer products through product registration, warranty cards or other means. The staff seeks written comments and oral presentations from individuals, associations, firms, and government agencies with information relevant to this topic. In addition, the staff is setting up panels of presenters made up of representatives of federal agencies that use product registration for recalls, industry members that use product registration cards, and consumer organizations.

DATES: The forum will commence at 9:30 a.m. on March 23, 1999. Requests to make oral presentations, and the text of the presentations, must be received by the Office of the Secretary no later than February 26, 1999. Persons planning to make presentations at the forum should submit 10 copies of the text of their prepared remarks to the Office of the Secretary no later than February 26 1999, and provide an additional 50 copies for dissemination on the date of the forum. Written comments that are in place of, or in addition to, oral presentations must be received by the Office of the Secretary no later than March 5, 1999. Written comments must include the author's affiliation with, or employment or sponsorship by, any professional organization, government agency, or business firm. The staff reserves the right to limit the number of persons who participate and the duration of their presentations.

ADDRESSES: The forum will be in Room 420, CPSC's Hearing Room of the East-West Towers Building, 4330 East-West Highway, Bethesda, MD. Written comments, requests to make oral presentations, and texts of oral presentations should be captioned ''Purchaser Identification'' and mailed to the Office of the Secretary, Consumer Product Safety Commission, Washington, D.C. 20207, or delivered to that office, Room 502, 4330 East-West Highway, Bethesda, Maryland 20814. Comments, requests, and texts of oral presentations may also be filed by telefacsimile to (301) 504–0127 or by e-mail to cpsc-os@cpsc.gov.

FOR FURTHER INFORMATION CONTACT: Lawrence Hershman, Compliance Officer, Recalls and Compliance Division, U.S. Consumer Product Safety Commission, Washington, D.C. 20207; telephone (301) 504–0608, extension 1356; fax (301) 504–0359; or Melissa Hampshire, Attorney, Office of the General Counsel, U.S. Consumer Product Safety Commission, Washington, D.C.; telephone (301) 504–0980, extension 2208; fax (301) 504–0403. For information about the schedule for submission of written comments, requests to make oral presentations, and submission of texts of oral presentations, call or write Rockelle Hammond, Office of the Secretary, Consumer Product Safety Commission, Washington, D.C. 20207; telephone (301) 504–0800, extension 1232; fax (301) 504–0127.

SUPPLEMENTARY INFORMATION: The staff believes that recall notification could be facilitated if manufacturers were better able to identify the purchasers of their products. More effective recall notification could lead to a higher proportion of products returned for refund, repair or replacement. This, in turn, would enhance the safety of American consumers.

The staff has identified a number of issues:

- What products might be best-suited for such a proposal? Should lines be drawn, and, if so, would they be based on product cost; durability; historic injury experience; intended users, such as children; or other factors?
- How could purchaser identification information be assembled in a cost-effective and comprehensive manner?
- What is the scope and extent of the Commission's legal authority to require manufacturers to ascertain and maintain the identities of the purchasers of their products?

The staff expects to explore these and other related issues during the forum.

Some companies have been highly successful in assembling purchaser information through use of warranty cards or other means. These companies have been able to use this information to achieve commendable return rates in the event of a recall. The staff particularly solicits participation from such companies.

The staff also is aware that in certain instances, companies are required by law to collect purchaser information. For example, by regulation the Department of Transportation has facilitated the collection of such information pertaining to car seats. 49 CFR Part 588. The staff solicits participation of car seat manufacturers, who could provide pertinent information about their experience with registration cards. Similarly, by law, certain manufacturers of medical devices must track their purchasers. 21 U.S.C. 360i(e). We solicit input from such manufacturers, as well as from any manufacturer required by federal, state or local law to identify product purchasers and maintain that information for some period of time. The Commission is conducting this inquiry under Section 27(a) of the CPSA, 15 U.S.C. 2076(a).

Dated: February 2, 1999.

Sadye E. Dunn,

Secretary, Consumer Product Safety Commission.

[FR Doc. 99–2844 Filed 2–5–99; 8:45 am]

BILLING CODE 6355–01–U

DEPARTMENT OF DEFENSE

GENERAL SERVICES ADMINISTRATION

NATIONAL AERONAUTICS AND SPACE ADMINISTRATION

[OMB Control No. 9000–0053]

Proposed Collection; Comment Request Entitled Permits, Authorities, or Franchises Certification

AGENCIES: Department of Defense (DOD), General Services Administration (GSA), and National Aeronautics and Space Administration (NASA).

ACTION: Notice of request for public comments regarding an extension to an existing OMB clearance.

SUMMARY: Under the provisions of the Paperwork Reduction Act of 1995 (44 U.S.C. Chapter 35), the Federal

Acquisition Regulation (FAR) Secretariat will be submitting to the Office of Management and Budget (OMB) a request to review and approve an extension of a currently approved information collection requirement concerning Permits, Authorities, or Franchises Certification. The clearance currently expires on May 31, 1999.

DATES: Comments may be submitted on or before April 9, 1999.

ADDRESSES: Comments regarding this burden estimate or any other aspect of this collection of information, including suggestions for reducing this burden, should be submitted to: FAR Desk Officer, OMB, Room 10102, NEOB, Washington, DC 20503, and a copy to the General Services Administration, FAR Secretariat (MVRS), 1800 F Street, NW, Room 4035, Washington, DC 20405.

FOR FURTHER INFORMATION CONTACT: Linda Klein, Federal Acquisition Policy Division, GSA (202) 501–3775.

SUPPLEMENTARY INFORMATION:

A. Purpose

This certification and copies of authorizations are needed to determine that the offeror has obtained all authorizations, permits, etc., required in connection with transporting the material involved. The contracting officer reviews the certification and any documents requested to ensure that the offeror has complied with all regulatory requirements and has obtained any permits, licenses, etc., that are needed.

B. Annual Reporting Burden

Public reporting burden for this collection of information is estimated to average *15* minutes for the first completion, *1* minute for subsequent completions, or an average of *5.7* minutes per completion, including the time for reviewing instructions, searching existing data sources, gathering and maintaining the data needed, and completing and reviewing the collection of information.

The annual reporting burden is estimated as follows: Respondents, *1,106*; responses per respondent, *3*; total annual responses, *3,318*; preparation hours per response, *.094*; and total response burden hours, 312.

Obtaining Copies of Proposals: Requester may obtain a copy of the justification from the General Services Administration, FAR Secretariat (MVRS), Room 4035, 1800 F Street, NW, Washington, DC 20405, telephone (202) 208–7312. Please cite OMB Control No. 9000–0053, Permits, Authorities, or Franchises Certification, in all correspondence.

Dated: February 2, 1999.

Edward C. Loeb,

Director, Federal Acquisition Policy Division.

[FR Doc. 99–2875 Filed 2–5–99; 8:45 am]

BILLING CODE 6820–34–P

DEPARTMENT OF DEFENSE

GENERAL SERVICES ADMINISTRATION

NATIONAL AERONAUTICS AND SPACE ADMINISTRATION

[OMB Control No. 9000–0055]

Proposed Collections; Comment Request Entitled Freight Classification Description

AGENCIES: Department of Defense (DOD), General Services Administration (GSA), and National Aeronautics and Space Administration (NASA).

ACTION: Notice of request for public comments regarding an extension to an existing OMB clearance.

SUMMARY: Under the provisions of the Paperwork Reduction Act of 1995 (44 U.S.C. Chapter 35), the Federal Acquisition Regulation (FAR) Secretariat will be submitting to the Office of Management and Budget (OMB) a request to review and approve an extension of a currently approved information collection requirement concerning Freight Classification Description. The clearance currently expires on May 31, 1999.

DATES: Comments may be submitted on or before April 9, 1999.

ADDRESSES: Comments regarding this burden estimate or any other aspect of this collection of information, including suggestions for reducing this burden, should be submitted to: FAR Desk Officer, OMB, Room 10102, NEOB, Washington, DC 20503, and a copy to the General Services Administration, FAR Secretariat (MVRS), 1800 F Street, NW, Room 4035, Washington, DC 20405.

Please cite OMB Control No. 9000–0055, Freight Classification Description, in all correspondence.

FOR FURTHER INFORMATION CONTACT: Linda Klein, Federal Acquisition Policy Division, GSA (202) 501–3775.

SUPPLEMENTARY INFORMATION:

A. Purpose

When the Government purchases supplies that are new to the supply system, nonstandard, or modifications of previously shipped items, and different freight classifications may apply, offerors are requested to indicate the full Uniform Freight Classification or National Motor Freight Classification. The information is used to determine the proper freight rate for the supplies.

B. Annual Reporting Burden

Public reporting burden for this collection of information is estimated to average *10* minutes per response, including the time for reviewing instructions, searching existing data sources, gathering and maintaining the data needed, and completing and reviewing the collection of information.

The annual reporting burden is estimated as follows: Respondents, *2,640*; responses per respondent, *3*; total annual responses, *7,920*; preparation hours per response, *.167*; and total response burden hours, *1,323*.

Obtaining Copies of Proposals: Requester may obtain a copy of the justification from the General Services Administration, FAR Secretariat (MVRS), Room 4035, 1800 F Street, NW, Washington, DC 20405, telephone (202) 208–7312. Please cite OMB Control No. 9000–0055, Freight Classification Description, in all correspondence.

Dated: February 2, 1999.

Edward C. Loeb,

Director, Federal Acquisition Policy Division.

[FR Doc. 99–2877 Filed 2–5–99; 8:45 am]

BILLING CODE 6820–34–P

DEPARTMENT OF DEFENSE

GENERAL SERVICES ADMINISTRATION

NATIONAL AERONAUTICS AND SPACE ADMINISTRATION

[OMB Control No. 9000–0057]

Proposed Collection; Comment Request Entitled Evaluation of Export Offers

AGENCIES: Department of Defense (DOD), General Services Administration (GSA), and National Aeronautics and Space Administration (NASA).

ACTION: Notice of request for public comments regarding an extension to an existing OMB clearance.

SUMMARY: Under the provisions of the Paperwork Reduction Act of 1995 (44 U.S.C. Chapter 35), the Federal Acquisition Regulation (FAR) Secretariat will be submitting to the Office of Management and Budget (OMB) a request to review and approve an extension of a currently approved information collection requirement concerning Evaluation of Export Offers. The clearance currently expires on May 31, 1999.

DATES: Comments may be submitted on or before April 9, 1999.

ADDRESSES: Comments regarding this burden estimate or any other aspect of this collection of information, including suggestions for reducing this burden should be submitted to: FAR Desk Officer, OMB, Room 10102, NEOB, Washington, DC 20503, and a copy to the General Services Administration, FAR Secretariat (MVRS), 1800 F Street, NW, Room 4035, Washington, DC 20405.

FOR FURTHER INFORMATION CONTACT: Linda Klein, Federal Acquisition Policy Division, GSA (202) 501–3775.

SUPPLEMENTARY INFORMATION:

A. Purpose

Offers submitted in response to Government solicitations must be evaluated and awards made on the basis of the lowest laid down cost to the Government at the overseas port of discharge, via methods and ports compatible with required delivery dates and conditions affecting transportation known at the time of evaluation. Offers are evaluated on the basis of shipment through the port resulting in the lowest cost to the Government. This provision collects information regarding the vendor's preference for delivery ports. The information is used to evaluate offers and award a contract based on the lowest cost to the Government.

B. Annual Reporting Burden

Public reporting burden for this collection of information is estimated to average *30* minutes for the first completion, *10* minutes for subsequent completions, or an average of *15* minutes per completion, including the time for reviewing instructions, searching existing data sources, gathering and maintaining the data needed, and completing and reviewing the collection of information.

The annual reporting burden is estimated as follows: Respondents, *100;* responses per respondent, *4;* total annual responses, *400;* preparation hours per response, *.25;* and total response burden hours, *100.*

Obtaining copies of proposals: Requester may obtain a copy of the justification from the General Services Administration, FAR Secretariat (MVRS), Room 4035, 1800 F Street, NW, Washington, DC 20405, telephone (202) 208–7312. Please cite OMB Control No. 9000–0057, Evaluation of Export Offers, in all correspondence.

Dated: February 2, 1999.

Edward C. Loeb,

Director, Federal Acquisition Policy Division.

[FR Doc. 99–2878 Filed 2–5–99; 8:45 am]

BILLING CODE 6820–34–P

DEPARTMENT OF DEFENSE

GENERAL SERVICES ADMINISTRATION

NATIONAL AERONAUTICS AND SPACE ADMINISTRATION

[OMB Control No. 9000–0061]

Proposed Collection; Comment Request Entitled Transportation Requirements

AGENCIES: Department of Defense (DOD), General Services Administration (GSA), and National Aeronautics and Space Administration (NASA).

ACTION: Notice of request for public comments regarding an extension to an existing OMB clearance.

SUMMARY: Under the provisions of the Paperwork Reduction Act of 1995 (44 U.S.C. Chapter 35), the Federal Acquisition Regulation (FAR) Secretariat will be submitting to the Office of Management and Budget (OMB) a request to review and approve an extension of a currently approved information collection requirement concerning Transportation Requirements. The clearance currently expires on May 31, 1999.

DATES: Comments may be submitted on or before April 9, 1999.

ADDRESSES: Comments regarding this burden estimate or any other aspect of this collection of information, including suggestions for reducing this burden, should be submitted to: FAR Desk Officer, OMB, Room 10102, NEOB, Washington, DC 20503 and a copy to the General Services Administration, FAR Secretariat (MVRS), 1800 F Street, NW, Room 4035, Washington, DC 20405.

FOR FURTHER INFORMATION CONTACT: Linda Klein, Federal Acquisition Policy Division, GSA (202) 501–3775.

SUPPLEMENTARY INFORMATION:

A. Purpose

FAR Part 47 and related clauses contain policies and procedures for applying transportation and traffic management considerations in the acquisition of supplies and acquiring transportation or transportation-related services. Generally, contracts involving transportation require information regarding the nature of the supplies, method of shipment, place and time of shipment, applicable charges, marking of shipments, shipping documents and other related items. This information is required to ensure proper and timely shipment of Government supplies.

B. Annual Reporting Burden

Public reporting burden for this collection of information is estimated to average *.23* hours per response, including the time for reviewing instructions, searching existing data sources, gathering and maintaining the data needed, and completing and reviewing the collection of information.

The annual reporting burden is estimated as follows: Respondents, *65,000*; responses per respondent, *4.4*; total annual responses, *286,000*; preparation hours per response, *.23*; and total response burden hours, *65,780*.

Obtaining Copies of Proposals: Requester may obtain a copy of the justification from the General Services Administration, FAR Secretariat (MVRS), Room 4035, 1800 F Street, NW, Washington, DC 20405, telephone (202) 208–7312. Please cite OMB Control No. 9000–0061, Transportation Requirements, in all correspondence.

Dated: February 2, 1999.

Edward C. Loeb,

Director, Federal Acquisition Policy Division.

[FR Doc. 99–2882 Filed 2–5–99; 8:45 am]

BILLING CODE 6820–34–P

DEPARTMENT OF DEFENSE

GENERAL SERVICES ADMINISTRATION

NATIONAL AERONAUTICS AND SPACE ADMINISTRATION

[OMB Control No. 9000–0054]

Proposed Collection; Comment Request Entitled U.S.-Flag Air Carriers Certification

AGENCIES: Department of Defense (DOD), General Services Administration (GSA), and National Aeronautics and Space Administration (NASA).

ACTION: Notice of request for public comments regarding an extension to an existing OMB clearance.

SUMMARY: Under the provisions of the Paperwork Reduction Act of 1995 (44 U.S.C. Chapter 35), the Federal Acquisition Regulation (FAR) Secretariat will be submitting to the Office of Management and Budget (OMB) a request to review and approve an extension of a currently approved information collection requirement concerning U.S.-Flag Air Carriers

Certification. The clearance currently expires on May 31, 1999.

DATES: Comments may be submitted on or before April 9, 1999.

ADDRESSES: Comments regarding this burden estimate or any other aspect of this collection of information, including suggestions for reducing this burden, should be submitted to: FAR Desk Officer, OMB, Room 10102, NEOB, Washington, DC 20503, and a copy to the General Services Administration, FAR Secretariat (MVRS), 1800 F Street, NW., Room 4035, Washington, DC 20405.

FOR FURTHER INFORMATION CONTACT: Linda Klein, Federal Acquisition Policy Division, GSA (202) 501–3775.

SUPPLEMENTARY INFORMATION:

A. Purpose

Section 5 of the International Air Transportation Fair Competitive Practices Act of 1974 (49 U.S.C. 1517) (Fly America Act) requires that all Federal agencies and Government contractors and subcontractors use U.S.-flag air carriers for U.S. Government-financed international air transportation of personnel (and their personal effects) or property, to the extent that service by those carriers is available. It requires the Comptroller General of the United States, in the absence of satisfactory proof of the necessity for foreign-flag air transportation, to disallow expenditures from funds, appropriated or otherwise established for the account of the United States, for international air transportation secured aboard a foreign-flag air carrier if a U.S.-flag carrier is available to provide such services. In the event that the contractor selects a carrier other than a U.S.-flag air carrier for international air transportation, the contractor shall include a certification on vouchers involving such transportation. The contracting officer uses the information furnished in the certification to determine whether adequate justification exists for the contractor's use of other than a U.S.-flag air carrier.

B. Annual Reporting Burden

Public reporting burden for this collection of information is estimated to average *15* minutes per response, including the time for reviewing instructions, searching existing data sources, gathering and maintaining the data needed, and completing and reviewing the collection of information.

The annual reporting burden is estimated as follows: Respondents, *150*; responses per respondent, *2*; total annual responses, *300*; preparation hours per response, *.25*; and total response burden hours, *75*.

Obtaining Copies of Proposals: Requester may obtain a copy of the justification from the General Services Administration, FAR Secretariat (MVRS), Room 4035, 1800 F Street, NW., Washington, DC 20405, telephone (202) 208–7312. Please cite OMB Control No. 9000–0054, U.S.-Flag Air Carriers Certification, in all correspondence.

Dated: February 2, 1999.

Edward C. Loeb,

Director, Federal Acquisition Policy Division.

[FR Doc. 99–2876 Filed 2–5–99; 8:45 am]

BILLING CODE 6820–34–P

DEPARTMENT OF DEFENSE

GENERAL SERVICES ADMINISTRATION

NATIONAL AERONAUTICS AND SPACE ADMINISTRATION

[OMB Control No. 9000–0068]

Proposed Collection; Comment Request Entitled Economic Price Adjustment

AGENCIES: Department of Defense (DOD), General Services Administration (GSA), and National Aeronautics and Space Administration (NASA).

ACTION: Notice of request for public comments regarding an extension to an existing OMB clearance.

SUMMARY: Under the provisions of the Paperwork Reduction Act of 1995 (44 U.S.C. Chapter 35), the Federal Acquisition Regulation (FAR) Secretariat will be submitting to the Office of Management and Budget (OMB) a request to review and approve an extension of a currently approved information collection requirement concerning Economic Price Adjustment. The clearance currently expires on May 31, 1999.

DATES: Comments may be submitted on or before April 9, 1999.

ADDRESSES: Comments regarding this burden estimate or any other aspect of this collection of information, including suggestions for reducing this burden, should be submitted to: FAR Desk Officer, OMB, Room 10102, NEOB, Washington, DC 20503, and a copy to the General Services Administration, FAR Secretariat (MVRS), 1800 F Street, NW, Room 4035, Washington, DC 20405.

Please cite OMB Control No. 9000–0068, Economic Price Adjustment, in all correspondence.

FOR FURTHER INFORMATION CONTACT: Ralph DeStefano, Federal Acquisition Policy Division, GSA (202) 501–1758.

SUPPLEMENTARY INFORMATION:

A. Purpose

A fixed-price contract with economic price adjustment provides for upward and downward revision of the stated contract price upon occurrence of specified contingencies. In order for the contracting officer to be aware of price changes, the firm must provide pertinent information to the Government. The information is used to determine the proper amount of price adjustments required under the contract.

B. Annual Reporting Burden

Public reporting burden for this collection of information is estimated to average *15* minutes per response, including the time for reviewing instructions, searching existing data sources, gathering and maintaining the data needed, and completing and reviewing the collection of information.

The annual reporting burden is estimated as follows: Respondents, *7,200*; responses per respondent, *1*; total annual responses, *7,200*; preparation hours per response, *.25*; and total response burden hours, *1,800*.

Obtaining Copies of Proposals

Requester may obtain a copy of the justification from the General Services Administration, FAR Secretariat (MVRS), Room 4035, 1800 F Street, NW, Washington, DC 20405, telephone (202) 208–7312. Please cite OMB Control No. 9000–0068, Economic Price Adjustment, in all correspondence.

Dated: February 2, 1999.

Edward C. Loeb,

Director, Federal Acquisition Policy Division.

[FR Doc. 99–2883 Filed 2–5–99; 8:45 am]

BILLING CODE 6820–34–P

DEPARTMENT OF DEFENSE

GENERAL SERVICES ADMINISTRATION

NATIONAL AERONAUTICS AND SPACE ADMINISTRATION

[OMB Control No. 9000–0069]

Proposed Collection; Comment Request Entitled Indirect Cost Rates

AGENCIES: Department of Defense (DOD), General Services Administration (GSA), and National Aeronautics and Space Administration (NASA).

ACTION: Notice of request for public comments regarding an extension to an existing OMB clearance (9000–0069).

SUMMARY: Under the provisions of the Paperwork Reduction Act of 1995 (44 U.S.C. Chapter 35), the Federal Acquisition Regulation (FAR) Secretariat will be submitting to the Office of Management and Budget (OMB) a request to review and approve an extension of a currently approved information collection requirement concerning Indirect Cost Rates. The clearance currently expires on May 31, 1999.

DATES: Comments may be submitted on or before April 9, 1999.

ADDRESSES: Comments regarding this burden estimate or any other aspect of this collection of information, including suggestions for reducing this burden, should be submitted to: FAR Desk Officer, OMB, Room 10102, NEOB, Washington, DC 20503, and a copy to the General Services Administration, FAR Secretariat (MVRS), 1800 F Street, NW, Room 4035, Washington, DC 20405. Please cite OMB Control No. 9000–0069, Indirect Cost Rates, in all correspondence.

FOR FURTHER INFORMATION CONTACT: Linda Klein, Federal Acquisition Policy Division, GSA (202) 501–3775.

SUPPLEMENTARY INFORMATION:

A. Purpose

The contractor's proposal of final indirect cost rates is necessary for the establishment of rates used to reimburse the contractor for the costs of performing under the contract. The supporting cost data are the cost accounting information normally prepared by organizations under sound management and accounting practices.

The proposal and supporting data is used by the contracting official and auditor to verify and analyze the indirect costs and to determine the final indirect cost rates or to prepare the Government negotiating position if negotiation of the rates is required under the contract terms.

B. Annual Reporting Burden

Public reporting burden for this collection of information is estimated to average *1* hour per completion, including the time for reviewing instructions, searching existing data sources, gathering and maintaining the data needed, and completing and reviewing the collection of information.

The annual reporting burden is estimated as follows: Respondents, *9,770*; responses per respondent, *1*; total annual responses, *9,770*; preparation hours per response, *1*; and total response burden hours, *9,770*.

Obtaining copies of proposals: Requester may obtain a copy of the justification from the General Services Administration, FAR Secretariat (MVRS), Room 4035, 1800 F Street, NW, Washington, DC 20405, telephone (202) 208–7312. Please cite OMB Control No. 9000–0069, Indirect Cost Rates, in all correspondence.

Dated: February 2, 1999.

Edward C. Loeb,

Director, Federal Acquisition Policy Division.

[FR Doc. 99–2885 Filed 2–5–99; 8:45 am]

BILLING CODE 6820–34–P

DEPARTMENT OF DEFENSE

GENERAL SERVICES ADMINISTRATION

NATIONAL AERONAUTICS AND SPACE ADMINISTRATION

[OMB Control No. 9000–0071]

Proposed Collection; Comment Request Entitled Price Redetermination

AGENCIES: Department of Defense (DOD), General Services Administration (GSA), and National Aeronautics and Space Administration (NASA).

ACTION: Notice of request for public comments regarding an extension to an existing OMB clearance (9000–0071).

SUMMARY: Under the provisions of the Paperwork Reduction Act of 1995 (44 U.S.C. Chapter 35), the Federal Acquisition Regulation (FAR) Secretariat will be submitting to the Office of Management and Budget (OMB) a request to review and approve an extension of a currently approved information collection requirement concerning Price Redetermination. The clearance currently expires on May 31, 1999.

DATES: Comments may be submitted on or before April 9, 1999.

ADDRESSES: Comments regarding this burden estimate or any other aspect of this collection of information, including suggestions for reducing this burden, should be submitted to: FAR Desk Officer, OMB, Room 10102, NEOB, Washington, DC 20503, and a copy to the General Services Administration, FAR Secretariat (MVRS), 1800 F Street, NW, Room 4035, Washington, DC 20405. Please cite OMB Control No. 9000–0071, Price Redetermination, in all correspondence.

FOR FURTHER INFORMATION CONTACT: Ralph DeStefano, Federal Acquisition Policy Division, GSA (202) 501–1758.

SUPPLEMENTARY INFORMATION:

A. Purpose

Fixed-price contracts with prospective price redetermination provide for firm fixed prices for an initial period of the contract with prospective redetermination at stated times during performance. Fixed price contracts with retroactive price redetermination provide for a fixed ceiling price and retroactive price redetermination within the ceiling after completion of the contract. In order for the amounts of price adjustments to be determined, the firms performing under these contracts must provide information to the Government regarding their expenditures and anticipated costs. The information is used to establish fair price adjustments to Federal contracts.

B. Annual Reporting Burden

Public reporting burden for this collection of information is estimated to average *1* hour per completion, including the time for reviewing instructions, searching existing data sources, gathering and maintaining the data needed, and completing and reviewing the collection of information.

The annual reporting burden is estimated as follows: Respondents, *3,500;* responses per respondent, *2;* total annual responses, *7,000;* preparation hours per response, *1;* and total response burden hours, *7,000.*

Obtaining copies of proposals: Requester may obtain a copy of the justification from the General Services Administration, FAR Secretariat (MVRS), Room 4035, 1800 F Street, NW, Washington, DC 20405, telephone (202) 208–7312. Please cite OMB Control No. 9000–0071, Price Redetermination, in all correspondence.

Dated: February 2, 1999.

Edward C. Loeb,

Director, Federal Acquisition Policy Division.

[FR Doc. 99–2886 Filed 2–5–99; 8:45 am]

BILLING CODE 6820–34–P

DEPARTMENT OF DEFENSE

GENERAL SERVICES ADMINISTRATION

NATIONAL AERONAUTICS AND SPACE ADMINISTRATION

[OMB Control No. 9000–0035]

Submission for OMB Review; Comment Request Entitled Claims and Appeals

AGENCIES: Department of Defense (DOD), General Services Administration (GSA), and National Aeronautics and Space Administration (NASA).

ACTION: Notice of request for an extension to an existing OMB clearance.

SUMMARY: Under the provisions of the Paperwork Reduction Act of 1995 (44 U.S.C. Chapter 35), the Federal Acquisition Regulation (FAR) Secretariat has submitted to the Office of Management and Budget (OMB) a request to review and approve an extension of a currently approved information collection requirement concerning Claims and Appeals. A request for public comments was published at 63 FR 65759, November 30, 1998. No comments were received.

DATES: Comments may be submitted on or before March 10, 1999.

ADDRESSES: Comments regarding this burden estimate or any other aspect of this collection of information, including suggestions for reducing this burden, or obtaining a copy of the justification, should be submitted to: FAR Desk Officer, OMB, Room 10102, NEOB, Washington, DC 20503, and a copy to the General Services Administration, FAR Secretariat (MVRS), 1800 F Street, NW, Room 4035, Washington, DC 20405.

FOR FURTHER INFORMATION CONTACT: Jack O'Neill, Federal Acquisition Policy Division, GSA (202) 501–3856.

SUPPLEMENTARY INFORMATION:

A. Purpose

It is the Government's policy to try to resolve all contractual issues by mutual agreement at the contracting officer's level without litigation. Contractor's claims must be submitted in writing to the contracting officer for a decision. Claims exceeding $100,000 must be accompanied by a certification that (1) the claim is made in good faith; (2) supporting data are accurate and complete; and (3) the amount requested accurately reflects the contract adjustment for which the contractor believes the Government is liable. Contractors may appeal the contracting officer's decision by submitting written appeals to the appropriate officials.

B. Annual Reporting Burden

Public reporting burden for this collection of information is estimated to average 1 hour per completion, including the time for reviewing instructions, searching existing data sources, gathering and maintaining the data needed, and completing and reviewing the collection of information.

The annual reporting burden is estimated as follows: Respondents, *4,500;* responses per respondent, *3;* total annual responses, *13,500;* preparation hours per response *1;* and total response burden hours, *13,500.*

Obtaining copies of proposals: Requester may obtain a copy of the justification from the General Services Administration, FAR Secretariat (MVRS), Room 4035, 1800 F Street, NW, Washington, DC 20405, telephone (202) 208–7312. Please cite OMB Control No. 9000–0035, Claims and Appeals, in all correspondence.

Dated: February 2, 1999.

Edward C. Loeb,

Director, Federal Acquisition Policy Division.

[FR Doc. 99–2887 Filed 2–5–99; 8:45 am]

BILLING CODE 6820–34–P

DEPARTMENT OF DEFENSE

GENERAL SERVICES ADMINISTRATION

NATIONAL AERONAUTICS AND SPACE ADMINISTRATION

[OMB Control No. 9000–0038]

Submission for OMB Review; Comment Request Entitled Mistake in Bid

AGENCIES: Department of Defense (DOD), General Services Administration (GSA), and National Aeronautics and Space Administration (NASA).

ACTION: Notice of request for an extension to an existing OMB clearance.

SUMMARY: Under the provisions of the Paperwork Reduction Act of 1995 (44 U.S.C. Chapter 35), the Federal Acquisition Regulation (FAR) Secretariat has submitted to the Office of Management and Budget (OMB) a request to review and approve an extension of a currently approved information collection requirement concerning Mistake in Bid. A request for public comments was published at 63 FR 65756, November 30, 1998. No comments were received.

DATES: Comments may be submitted on or before March 10, 1999.

ADDRESSES: Send comments regarding this burden estimate or any other aspect of this collection of information, including suggestions for reducing this burden, to: FAR Desk Officer, OMB, Room 10102, NEOB, Washington, DC 20503, and a copy to the General Services Administration, FAR Secretariat (MVRS), 1800 F Streets, NW, Room 4035, Washington, DC 20405.

FOR FURTHER INFORMATION CONTACT: Ralph DeStefano, Federal Acquisition Policy Division, GSA (202) 501–1758.

SUPPLEMENTARY INFORMATION:

A. Purpose

When a mistake in bid is discovered by the contracting officer (CO) after bid opening but before award, the CO obtains verification of the bid intended. This verification is needed to establish the bidder's correct bid. If the bidder requests permission to correct the bid, the bidder must submit clear and convincing evidence that a mistake was made. If the bidder requests permission to correct the bid and submits evidence that a mistake was made, the evidence is analyzed by the CO to determine whether or not the bidder should be allowed to correct the bid. The data (evidence) submitted by the bidder is attached to bidder's bid and placed in the contract file along with the CO's determination.

The verification of the correct bid is attached to the original bid and a copy of the verification is attached to the duplicate bid and placed in the contract file.

B. Annual Reporting Burden

Public reporting burden for this collection of information is estimated to average *30* minutes per response, including the time for reviewing instructions, searching existing data sources, gathering and maintaining the data needed, and completing and reviewing the collection of information.

The annual reporting burden is estimated as follows: Respondents, *4,673*; responses per respondent, *1*; total annual responses, *4,673*; preparation hours per response, *.5*; and total response burden hours, *2,337*.

Obtaining copies of proposals: Requester may obtain a copy of the justification from the General Services Administration, FAR Secretariat (MVRS), 1800 F Street, NW, Room 4035, Washington, DC 20405, telelphone (202) 208–7312. Please cite OMB Control No. 9000–0038, Mistake in Bid, in all correspondence.

Dated: February 2, 1999.

Edward C. Loeb,

Director, Federal Acquisition Policy Division.

[FR Doc. 99–2888 Filed 2–5–99; 8:45 am]

BILLING CODE 6820–34–P

DEPARTMENT OF DEFENSE

GENERAL SERVICES ADMINISTRATION

NATIONAL AERONAUTICS AND SPACE ADMINISTRATION

[OMB Control No. 9000–0004]

Submission for OMB Review; Comment Request Entitled Architect-Engineer and Related Services Questionnaire (SF 254)

AGENCY: Department of Defense (DOD), General Services Administration (GSA), and National Aeronautics and Space Administration (NASA).

ACTION: Notice of request for an extension to an existing OMB clearance.

SUMMARY: Under the provisions of the Paperwork Reduction Act of 1995 (44 U.S.C. Chapter 35), the Federal Acquisition Regulation (FAR) Secretariat has submitted to the Office of Management and Budget (OMB) a request to review and approve an extension of a currently approved information collection requirement concerning Architect-Engineer and Related Services Questionnaire (SF 254). A request for public comments was published at 63 FR 65758, November 30, 1998. No comments were received.

DATES: Comments may be submitted on or before March 10, 1999.

ADDRESSES: Comments regarding this burden estimate or any other aspect of this collection of information, including suggestions for reducing this burden, or obtaining a copy of the justification, should be submitted to: FAR Desk Officer, OMB, Room 10102, NEOB, Washington, DC 20503, and a copy to the General Services Administration, FAR Secretariat (MVRS), 1800 F Street, NW, Room 4035, Washington, DC 20405.

FOR FURTHER INFORMATION CONTACT: Jack O'Neill, Federal Acquisition Policy Division, GSA (202) 501–3856.

SUPPLEMENTARY INFORMATION:

A. Purpose

Standard Form 254 is used by all Executive agencies to obtain uniform information about a firm's experience in architect-engineering (A–E) projects. The form is submitted annually as required by 40 U.S.C. 541–544 by firms wishing to be considered for Government A–E contracts. The information obtained on this form is used to determine if a firm should be solicited for A–E projects.

B. Annual Reporting Burden

Public reporting burden for this collection of information is estimated to average *1* hour per response, including the time for reviewing instructions, searching existing data sources, gathering and maintaining the data needed, and completing and reviewing the collection of information.

The annual reporting burden is estimated as follows: Respondents, *5,000*; responses per respondent, *7*; total annual responses, *35,000*; preparation hours per response, *1*; and total response burden hours, *35,000*.

Obtaining copies of proposals: Requester may obtain a copy of the justification from the General Services Administration, FAR Secretariat (MVRS), Room 4035, 1800 F Street, NW, Washington, DC 20405, telephone (202) 208–7312. Please cite OMB Control No. 9000–0004, Architect-Engineer and Related Services Questionnaire (SF 254), in all correspondence.

Dated: February 2, 1999.

Edward C. Loeb,

Director, Federal Acquisition Policy Division.

[FR Doc. 99–2889 Filed 2–5–99; 8:45 am]

BILLING CODE 6820–34–M

DEPARTMENT OF DEFENSE

GENERAL SERVICES ADMINISTRATION

NATIONAL AERONAUTICS AND SPACE ADMINISTRATION

[OMB Control No. 9000–0043]

Submission for OMB Review; Comment Request Entitled Delivery Schedules

AGENCIES: Department of Defense (DOD), General Services Administration (GSA), and National Aeronautics and Space Administration (NASA).

ACTION: Notice of request for an extension to an existing OMB clearance.

SUMMARY: Under the provisions of the Paperwork Reduction Act of 1995 (44 U.S.C. Chapter 35), the Federal Acquisition Regulation (FAR) Secretariat has submitted to the Office of Management and Budget (OMB) a request to review and approve an extension of a currently approved information collection requirement concerning Delivery Schedules. A request for public comments was published at 63 FR 65757, November 30, 1998. No comments were received.

DATES: Comments may be submitted on or before March 10, 1999.

ADDRESSES: Send comments regarding this burden estimate or any other aspect of this collection of information, including suggestions for reducing this burden, to: FAR Desk Officer, OMB, Room 10102, NEOB, Washington, DC 20503, and a copy to the General Services Administration, FAR Secretariat (MVRS), 1800 F Street, NW, Room 4035, Washington, DC 20405.

FOR FURTHER INFORMATION CONTACT: Ralph DeStefano, Federal Acquisition Policy Division, GSA (202) 501–1758.

SUPPLEMENTARY INFORMATION:

A. Purpose

The time of delivery or performance is an essential contract element and must be clearly stated in solicitations and contracts. The contracting officer may set forth a required delivery schedule or may allow an offeror to propose an alternate delivery schedule. The information is needed to assure supplies or services are obtained in a timely manner.

B. Annual Reporting Burden

Public reporting burden for this collection of information is estimated to average *10* minutes per completion, including the time for reviewing instructions, searching existing data sources, gathering and maintaining the data needed, and completing and reviewing the collection of information.

The annual reporting burden is estimated as follows: Respondents, *3,440*; responses per respondent, *5*; total annual responses, *17,200*; preparation hours per response, *.167*; and total response burden hours, *2,872*.

Obtaining copies of proposals: Requester may obtain a copy of the justification from the General Services Administration, FAR Secretariat (MVRS), 1800 F Street, NW, Room 4035, Washington, DC 20405, telephone (202) 208–7312. Please cite OMB Control No. 9000–0043, Delivery Schedules, in all correspondence.

Dated: February 2, 1999.

Edward C. Loeb,

Director, Federal Acquisition Policy Division.

[FR Doc. 99–2890 Filed 2–5–99; 8:45 am]

BILLING CODE 6820–34–P

DEPARTMENT OF DEFENSE

GENERAL SERVICES ADMINISTRATION

NATIONAL AERONAUTICS AND SPACE ADMINISTRATION

[OMB Control No. 9000–0039]

Submission for OMB Review; Comment Request Entitled Descriptive Literature

AGENCIES: Department of Defense (DOD), General Services Administration (GSA), and National Aeronautics and Space Administration (NASA).

ACTION: Notice of request for an extension to an existing OMB clearance.

SUMMARY: Under the provisions of the Paperwork Reduction Act of 1995 (44 U.S.C. Chapter 35), the Federal Acquisition Regulation (FAR) Secretariat has submitted to the Office of Management and Budget (OMB) a request to review and approve an extension of a currently approved information collection requirement concerning Descriptive Literature. A request for public comments was published at 63 FR 65756, November 30, 1998. No comments were received.

DATES: Comments may be submitted on or before March 10, 1999.

ADDRESSES: Send comments regarding this burden estimate or any other aspect of this collection of information, including suggestions for reducing this burden, to: FAR Desk Officer, OMB, Room 10102, NEOB, Washington, DC 20503, and a copy to the General Services Administration, FAR Secretariat (MVRS), 1800 F Streets, NW, Room 4035, Washington, DC 20405.

FOR FURTHER INFORMATION CONTACT: Ralph DeStefano, Federal Acquisition Policy Division, GSA (202) 501–1758.

SUPPLEMENTARY INFORMATION:

A. Purpose

Descriptive literature means information which shows the characteristics or construction of a product or explains its operation. It is furnished by bidders as a part of their bids to describe the products offered. Bidders are not required to furnish descriptive literature unless the contracting office needs it to determine before award whether the products offered meet the specification and to establish exactly what the bidder proposes to furnish.

B. Annual Reporting Burden

Public reporting burden for this collection of information is estimated to average *10* minutes per response, including the time for reviewing instructions, searching existing data sources, gathering and maintaining the data needed, and completing and reviewing the collection of information.

The annual reporting burden is estimated as follows: Respondents, *2,663*; responses per respondent, *3*; total annual responses, *7,989*; preparation hours per response, *.167*; and total response burden hours, *1,334*.

Obtaining Copies of Proposals: Requester may obtain a copy of the justification from the General Services Administration, FAR Secretariat (MVRS), 1800 F Street, NW, Room 4035, Washington, DC 20405, telephone (202) 208–7312. Please cite OMB Control No. 9000–0039, Descriptive Literature, in all correspondence.

Dated: February 2, 1999.

Edward C. Loeb,

Director, Federal Acquisition Policy Division.

[FR Doc. 99–2891 Filed 2–5–99; 8:45 am]

BILLING CODE 6820–34–P

DEPARTMENT OF DEFENSE

GENERAL SERVICES ADMINISTRATION

NATIONAL AERONAUTICS AND SPACE ADMINISTRATION

[OMB Control No. 9000–0047]

Submission for OMB Review; Comment Request Entitled Place of Performance

AGENCIES: Department of Defense (DOD), General Services Administration (GSA), and National Aeronautics and Space Administration (NASA).

ACTION: Notice of request for an extension to an existing OMB clearance.

SUMMARY: Under the provisions of the Paperwork Reduction Act of 1995 (44 U.S.C. Chapter 35), the Federal Acquisition Regulation (FAR) Secretariat has submitted to the Office of Management and Budget (OMB) a request to review and approve an extension of a currently approved information collection requirement concerning Place of Performance. A request for public comments was published at 63 FR 65759, November 30, 1998. No comments were received.

DATES: Comments may be submitted on or before March 10, 1999.

ADDRESSES: Comments regarding this burden estimate or any other aspect of this collection of information, including suggestions for reducing this burden, or obtaining a copy of the justification, should be submitted to: FAR Desk Officer, OMB, Room 10102, NEOB, Washington, DC 20503, and a copy to the General Services Administration, FAR Secretariat (MVRS), 1800 F Street, NW, Room 4035, Washington, DC 20405

FOR FURTHER INFORMATION CONTACT: Ralph DeStefano, Federal Acquisition Policy Division, GSA (202) 501–1758.

SUPPLEMENTARY INFORMATION:

A. Purpose

The information relative to the place of performance and owner of plant or facility, if other than the prospective contractor, is a basic requirement when contracting for supplies or services (including construction). This information is instrumental in determining bidder responsibility, responsiveness, and price reasonableness. A prospective contractor must affirmatively demonstrate its responsibility. Hence, the Government must be apprised of this information prior to award. The contracting officer must know the place of performance and the owner of the plant or facility to (a) determine bidder responsibility; (b) determine price reasonableness; (c) conduct plant or source inspections; and (d) determine whether the prospective contractor is a manufacturer or a regular dealer. The information is used to determine the firm's eligibility for awards and to assure proper preparation of the contract.

B. Annual Reporting Burden

Public reporting burden for this collection of information is estimated to average *4* minutes per response, including the time for reviewing instructions, searching existing data sources, gathering and maintaining the data needed, and completing and reviewing the collection of information.

The annual reporting burden is estimated as follows: Respondents, *79,397*; responses per respondent, *14*; total annual responses, *1,111,558*; preparation hours per response, *.07*; and total response burden hours, *77,810*.

Obtaining copies of proposals: Requester may obtain a copy of the justification from the General Services Administration, FAR Secretariat (MVRS), Room 4035, 1800 F Street, NW, Washington, DC 20405, telephone (202) 208–7312. Please cite OMB Control No. 9000–0047, Place of Performance, in all correspondence.

Dated: February 2, 1999.

Edward C. Loeb,

Director, Federal Acquisition Policy Division.

[FR Doc. 99–2896 Filed 2–5–99; 8:45 am]

BILLING CODE 6820–34–P

DEPARTMENT OF DEFENSE

GENERAL SERVICES ADMINISTRATION

NATIONAL AERONAUTICS AND SPACE ADMINISTRATION

[OMB Control No. 9000–0048]

Submission for OMB Review; Comment Request Entitled Authorized Negotiators

AGENCIES: Department of Defense (DOD), General Services Administration (GSA), and National Aeronautics and Space Administration (NASA).

ACTION: Notice of request for an extension to an existing OMB clearance.

SUMMARY: Under the provisions of the Paperwork Reduction Act of 1995 (44 U.S.C. Chapter 35), the Federal Acquisition Regulation (FAR) Secretariat has submitted to the Office of Management and Budget (OMB) a request to review and approve an extension of a currently approved information collection requirement concerning Authorized Negotiators. A request for public comments was published at 63 FR 65757, November 30, 1998. No comments were received.

DATES: Comments may be submitted on or before March 10, 1999.

ADDRESSES: Comments regarding this burden estimate or any other aspect of this collection of information, including suggestions for reducing this burden, or obtaining a copy of the justification, should be submitted to: FAR Desk Officer, OMB, Room 10102, NEOB, Washington, DC 20503, and a copy to the General Services Administration, FAR Secretariat (MVRS), 1800 F Streets, NW, Room 4035, Washington, DC 20405.

FOR FURTHER INFORMATION CONTACT: Ralph DeStefano, Federal Acquisition Policy Division, GSA (202) 501–1758.

SUPPLEMENTARY INFORMATION:

A. Purpose

Firms offering supplies or services to the Government under negotiated solicitations must provide the names, titles, and telephone numbers of authorized negotiators to assure that discussions are held with authorized individuals. The information collected is referred to before contract negotiations and it becomes part of the official contract file.

B. Annual Reporting Burden

Public reporting burden for this collection of information is estimated to average *1* minute per completion, including the time for reviewing instructions, searching existing data sources, gathering and maintaining the data needed, and completing and reviewing the collection of information.

The annual reporting burden is estimated as follows: Respondents, *61,875*; responses per respondent, *8*; total annual responses, *495,000*; preparation hours per response, *.017*; and total response burden hours, *8,415*.

Obtaining copies of proposals: Requester may obtain a copy of the justification from the General Services Administration, FAR Secretariat (MVRS), Room 4035, 1800 F Street, NW, Washington, DC 20405, telephone (202) 208–7312. Please cite OMB Control No. 9000–0048, Authorized Negotiators, in all correspondence.

Dated: February 2, 1999.

Edward C. Loeb,

Director, Federal Acquisition Policy Division.

[FR Doc. 99–2897 Filed 2–5–99; 8:45 am]

BILLING CODE 6820–34–P

DEPARTMENT OF DEFENSE

GENERAL SERVICES ADMINISTRATION

NATIONAL AERONAUTICS AND SPACE ADMINISTRATION

[OMB Control No. 9000–0065]

Submission for OMB Review; Comment Request Entitled Overtime

AGENCIES: Department of Defense (DOD), General Services Administration (GSA), and National Aeronautics and Space Administration (NASA).

ACTION: Notice of request for an extension to an existing OMB clearance.

SUMMARY: Under the provisions of the Paperwork Reduction Act of 1995 (44 U.S.C. Chapter 35), the Federal Acquisition Regulation (FAR) Secretariat has submitted to the Office of Management and Budget (OMB) a request to review and approve an extension of a currently approved information collection requirement concerning Overtime. A request for public comments was published at 63 FR 65758, November 30, 1998. No comments were received.

DATES: Comments may be submitted on or before March 10, 1999.

ADDRESSES: Comments regarding this burden estimate or any other aspect of this collection of information, including suggestions for reducing this burden, should be submitted to: FAR Desk Officer, OMB, Room 10102, NEOB, Washington, DC 20503, and a copy to the General Services Administration, FAR Secretariat (MVRS), 1800 F Streets, NW, Room 4035, Washington, DC 20405.

FOR FURTHER INFORMATION CONTACT: Jack O'Neill, Federal Acquisition Policy Division, GSA (202) 501–3856.

SUPPLEMENTARY INFORMATION:

A. Purpose

Federal solicitations normally do not specify delivery schedules that will require overtime at the Government's expense. However, when overtime is required under a contract and it exceeds the dollar ceiling established during negotiations, the contractor must request approval from the contracting officer for overtime. With the request, the contractor must provide information regarding the need for overtime.

B. Annual Reporting Burden

Public reporting burden for this collection of information is estimated to average *15* minutes per completion, including the time for reviewing instructions, searching existing data sources, gathering and maintaining the data needed, and completing and reviewing the collection of information.

The annual reporting burden is estimated as follows: Respondents, *1,270*; responses per respondent, *1*; total annual responses, *1,270*; preparation hours per response, *.25*; and total response burden hours, *318*.

Obtaining copies of proposals: Requester may obtain a copy of the justification from the General Services Administration, FAR Secretariat (MVRS), Room 4035, 1800 F Street, NW, Washington, DC 20405, telephone (202) 208–7312. Please cite OMB Control No. 9000–0065, Overtime, in all correspondence.

Dated: February 2, 1999.

Edward C. Loeb,

Director, Federal Acquisition Policy Division.

[FR Doc. 99–2898 Filed 2–5–99; 8:45 am]

BILLING CODE 6820–34–P

DEPARTMENT OF DEFENSE

Department of the Army

Notice of Availability of a Final Environmental Impact Statement (FEIS) for the Land Exchange Between Fort Benning and the City of Columbus, GA

AGENCY: U.S. Army Infantry Center and Fort Benning, Department of the Army, DoD.

ACTION: Notice of availability.

SUMMARY: This announces the availability of the Final Environmental Impact Statement (FEIS) which assesses the potential environmental impacts of the exchange of tracts of land between Fort Benning and the City of Columbus (hereafter referred to as the City.) Section 2829 of Public Law 101–510, enacted November 5, 1990, authorized a land exchange between the City and Fort Benning. The proposed action is to transfer the North Tract (ranging in size from 2,113 acres to 2,760 acres) to the City in exchange for the South Tract (ranging in size from 2,156 to 2,848 acres). The City intends to use the North Tract land for economic development and passive recreation. Fort Benning would use the land it receives for dismounted light infantry training.

DATES: Written comment received on or before March 10, 1999 for this action will be considered by the Army during final decision making.

ADDRESSES: To obtain copies of the FEIS contact: U.S. Army Infantry Center, Directorate of Public Works, Environmental Management Division, (ATTN: Mr. John Brent), Fort Benning, Georgia 31905–5122, or send e-mail to BrentJ@benning.army.mil.

FOR FURTHER INFORMATION CONTACT: U.S. Army Infantry Center, Directorate of Public Works, Environmental Management Division, (ATTN: Mr. John Brent), Fort Benning, Georgia 31905–5122; telephone (706) 545–4766; e-mail BrentJ@benning.army.mil.

SUPPLEMENTARY INFORMATION: The Department of the Army prepared a Draft Environmental Impact Statement (DEIS) which assessed the potential health and environmental impacts of each of five alternatives, including a ''No Action'' alternative, of this proposed action. A Notice of Availability was published on October 30, 1998 (63 FR 58380) outlining the five alternatives, and also providing notice that the DEIS was available for comment. Public information meetings were held on November 18 and 19 and December 8, 1998. Comments from the DEIS and public meetings have been considered and responses are included in this FEIS.

On June 26, 1996, Fort Benning conveyed 346 acres to the City for landfill development in exchange for 380 acres, as authorized under the same enabling legislation as the currently proposed exchange. An Environmental Assessment was prepared pursuant to the National Environmental Policy Act (NEPA) of 1969, and a Finding of No Significant Impact was prepared for the landfill land exchange. This notice of availability pertains only to the remaining acreage of the proposed North-South Tract land exchange FEIS, which involves the remaining 2,760 acres of Fort Benning land (the North Tract) and 2,848 acres of the City land (the South Tract). The FEIS includes an analysis of the cumulative environmental impacts from both the proposed North-South Tract exchange and the complete landfill land exchange.

The preferred alternative considered with the other four alternatives in this FEIS is Alternative V: Development of Reduced North Tract Without the Habitat Conservation Area (HCA). This alternative would reduce the North Tract to 2,113 acres in exchange for a South Tract of 2,156 acres. Most of the area identified for an HCA would remain with Fort Benning. Approximately a 690 acres Parks and Recreation Area would be established on the North Tract and may be used for wetlands protection, leaving approximately 1,423 acres of developable land. The Army would use the South Tract for dismounted light infantry training. The City would continue timber production on the portion that it would retain from the South Tract (692 acres).

The FEIS concludes that the proposed land exchange as presented in the preferred alternative (Development of Reduced North Tract Without the HCA) meets the needs and purposes of the action while minimizing the potential environmental impacts through mitigation.

The FEIS is available for public review at the following locations: W.C. Bradley Memorial Library, 1120 Bradley Drive, Columbus, Georgia; South Lumpkin Library, 2034 South Lumpkin Road, Columbus, Georgia; Sawyers Library, Building 93, Fort Benning, Georgia; Simon Schwob Memorial Library, Columbus State University, 4225 University Avenue, Columbus, Georgia; Columbus Chamber Commerce, 901 Front Street, Columbus, Georgia; and Columbus Government Center Tower, Columbus, Georgia.

Dated: January 29, 1999.

Raymond J. Fatz,

Deputy Assistant Secretary of the Army, (Environment, Safety and Occupational Health) OASA (I,L&E).

[FR Doc. 99–2901 Filed 2–5–99; 8:45 am]

BILLING CODE 3710–08–M

DEPARTMENT OF DEFENSE

Department of the Army

Notice of Intent to Enter Into a Cooperative Research and Development Agreement Concerning CAST™

AGENCY: U.S. Army Research Laboratory, Department of Defense.

ACTION: Notice of Intent.

SUMMARY: The U.S. Army Research Laboratory (ARL), Weapons and Materials Research Directorate and the University of Delaware Center for Composite Materials, are actively seeking a Cooperative Research and Development Agreement (CRADA) partner for the further development and commercialization of the Composite Analysis Software Tools (CAST™) technology. CAST™ is a suite of computer codes designed to predict the behavior of composite materials both during and after manufacturing. A brief description of each of the codes within the CAST™ suite and their capabilities can be found at *http://www.federallabs.org/flc/ma/pl.*

The software is already utilized in the composites research and development community, and enhancements could greatly broaden its utility for the academic and commercial sectors. The CRADA partner will assist in enhancing, documenting, distributing, maintaining, and providing user support for the software. A meeting will be held at the University of Delaware Center for Composites Manufacturing, 14 April 1999, to discuss the specifics of the proposed CRADA. The meeting will be held at the Composites Manufacturing Science Laboratory from 1000–1200. Please register for this conference at *http://wee.federallabs.org/flc/ma/pl.* If you do not have Internet access, you may register by contacting the U.S. Army Research Laboratory, Technology Transfer Office at 410–278–5028.

FOR FURTHER INFORMATION CONTACT: Michael D. Rausa, U.S. Army Research Laboratory, Office of Research and Technology Applications, ATTN: AMSRL–CS–TT/Bldg. 433, Aberdeen Proving Ground, Maryland 21005–5425, telephone: 410–278–5028 or e-mail *mrausa@arl.mil.*

SUPPLEMENTARY INFORMATION: None.

Mary V. Yonts,

Alternate Army Federal Register Liaison Officer.

[FR Doc. 99–2946 Filed 2–5–99; 8:45 am]

BILLING CODE 3710–08–M

DEPARTMENT OF EDUCATION

Submission for OMB Review; Comment Request

AGENCY: Department of Education.

SUMMARY: The Acting Leader, Information Management Group, Office of the Chief Information Officer invites comments on the submission for OMB review as required by the Paperwork Reduction Act of 1995.

DATES: Interested persons are invited to submit comments on or before March 10, 1999.

ADDRESSES: Written comments should be addressed to the Office of Information and Regulatory Affairs, Attention: Danny Werfel, Desk Officer, Department of Education, Office of Management and Budget, 725 17th Street, N.W., Room 10235, New Executive Office Building, Washington, D.C. 20503 or should be electronically mailed to the internet address DWERFEL@OMB.EOP.GOV. Requests for copies of the proposed information collection requests should be addressed to Patrick J. Sherrill, Department of Education, 400 Maryland Avenue, S.W., Room 5624, Regional Office Building 3, Washington, D.C. 20202–4651, or should be electronically mailed to the internet address *Pat*__Sherrill@ed.gov, or should be faxed to 202–708–9346.

FOR FURTHER INFORMATION CONTACT: Patrick J. Sherrill (202) 708–8196. Individuals who use a telecommunications device for the deaf (TDD) may call the Federal Information Relay Service (FIRS) at 1–800–877–8339 between 8 a.m. and 8 p.m., Eastern time, Monday through Friday.

SUPPLEMENTARY INFORMATION: Section 3506 of the Paperwork Reduction Act of 1995 (44 U.S.C. Chapter 35) requires that the Office of Management and Budget (OMB) provide interested Federal agencies and the public an early opportunity to comment on information collection requests. OMB may amend or waive the requirement for public consultation to the extent that public participation in the approval process would defeat the purpose of the information collection, violate State or Federal law, or substantially interfere with any agency's ability to perform its statutory obligations. The Acting Leader, Information Management Group, Office of the Chief Information Officer, publishes that notice containing proposed information collection requests prior to submission of these requests to OMB. Each proposed information collection, grouped by office, contains the following: (1) Type of review requested, e.g. new, revision, extension, existing or reinstatement; (2) Title; (3) Summary of the collection; (4) Description of the need for, and proposed use of, the information; (5) Respondents and frequency of collection; and (6) Reporting and/or Recordkeeping burden. OMB invites public comment at the address specified above. Copies of the requests are available from Patrick J. Sherrill at the address specified above.

Dated: February 2, 1999.

William E. Burrow,

Acting Leader Information Management Group, Office of the Chief Information Officer.

Office of Postsecondary Education

Type of Review: Revision.

Title: Annual Performance Report for the Student Support Services (SSS) Program.

Frequency: Annually.

Affected Public: Not-for-profit institutions.

Reporting and Recordkeeping Burden:
Responses: 800
Burden Hours: 3,600

Abstract: SSS grantees must submit the report annually so the Department can evaluate the performance of grantees prior to awarding continuation grants and to assess a grantee's prior experience at the end of each budget period. The Department will also aggregate the data to provide descriptive information and analyze program impact.

[FR Doc. 99–2884 Filed 2–5–99; 8:45 am]

BILLING CODE 4000–01–P

DEPARTMENT OF EDUCATION

Federal Student Financial Assistance Programs—Distance Education Demonstration Program

AGENCY: Department of Education.

ACTION: Notice of regional meetings to provide advice and technical assistance to institutions of higher education (institutions), systems of institutions, and consortia of institutions that are (1) interested in applying to participate in the Distance Education Demonstration Program authorized under section 486 of title IV of the Higher Education Act of 1965, as amended, or (2) interested in providing Federal financial aid to students enrolled in distance education programs.

SUMMARY: The Secretary of Education (Secretary) will conduct three regional meetings in the District of Columbia, San Francisco, and Denver to provide advice and technical assistance to potential applicants of the Distance Education Demonstration Program and to other institutions interested in providing Federal financial aid to students enrolled in distance education programs.

DATES: The regional meetings will be held on February 11, 1999 in the District of Columbia, February 17, 1999 in San Francisco, California, and February 19, 1999 in Denver, Colorado.

ADDRESSES: Marianne R. Phelps, U.S. Department of Education, 400 Maryland Avenue, SW (ROB–3, Room 4082), Washington, DC 20202–5257. Telephone: (202) 708–5547.

FOR FURTHER INFORMATION CONTACT: Marianne R. Phelps at (202) 708–5547 or E-Mail to DistanceDemo@ed.gov. Information regarding the program can also be found on the Web site of the Department of Education (http://www.ed.gov). If you use a telecommunications device for the deaf (TDD) you may call the Federal Information Relay Service (FIRS) at 1–800–877–8339 between 8 a.m. and 8 p.m., Eastern time, Monday through Friday.

Individuals with disabilities may obtain this document in an alternative format (e.g. Braille, large print, audiotape, or computer diskette) on request to the contact person listed in the preceding paragraph.

SUPPLEMENTARY INFORMATION:

Background

On October 7, 1998, President Clinton signed into law Pub. L. 105–244, the Higher Education Amendments of 1998, amending the Higher Education Act of 1965 (HEA). This legislation established the Distance Education Demonstration Program. Under this program, up to a total of 15 institutions, systems of institutions, or consortia of institutions may offer Title IV, HEA financial assistance to students enrolled in distance education programs without being subject to certain statutory and regulatory provisions, which the Secretary may waive, upon their request. As described in section 486(a) of the HEA, the purpose of the program is to—

(1) Allow demonstration programs that are strictly monitored by the Department of Education to test the quality and viability of expanded distance education programs currently restricted under this Act;

(2) Provide for increased student access to higher education through distance education programs; and

(3) Help determine the—

(A) Most effective means of delivering quality education via distance education course offerings;

(B) Specific statutory and regulatory requirements which should be altered to provide greater access to high quality distance education programs; and

(C) Appropriate level of federal assistance for students enrolled in distance education programs.

The Secretary anticipates publishing a notice inviting applications for participation in the Distance Education Demonstration Program in the **Federal Register** during the first week of February, 1999. This notice will specify the eligibility requirements for participation in the Distance Education Demonstration Program, the statutory and regulatory provisions that may be waived, the application requirements, and the criteria that will be used to select participants.

Regional Hearings

Interested parties are invited to attend three regional meetings that will provide advice and technical assistance about applying to participate in the Distance Education Demonstration Program and providing Federal financial aid to students enrolled in distance education programs. The regional meetings will begin with a brief description of eligibility requirements for the Distance Education Demonstration Program and the application and selection processes for this program. Then, individuals will be provided an opportunity to ask questions regarding the application process and other matters relating to the Distance Education Demonstration Program. Department of Education staff with expertise on various issues relating to the Distance Education Demonstration Program will be available to answer these questions.

Questions regarding eligibility and administration of Title IV, HEA student financial assistance programs may be relevant to institutions' interest in applying for the Distance Education Demonstration Program. Accordingly, during the course of the meeting, Department staff will also address questions that relate generally to the administration of aid in distance education programs.

The Department of Education has reserved a limited number of hotel rooms at each of the following hotels at a special government per diem room rate. To reserve these rates, be certain to inform the hotel that you are attending the regional hearings with the Department of Education.

The hearing sites are accessible to individuals with disabilities. The Department will provide a sign language interpreter at each of the scheduled hearings. An individual with a disability who will need an auxiliary aid or service other than an interpreter to participate in the meeting (e.g., assistive listening device, or materials in an alternative format) should notify the contact person listed in this notice at least two weeks before the scheduled meeting date. Although the Department will attempt to meet a request received after that date, the requested auxiliary aid or service may not be available because of insufficient time to arrange it. Dates, Times, and Locations of Regional Hearings.

1. February 11, 1999, 9 a.m. to 1 p.m., Washington Plaza Hotel, 10 Thomas Circle, NW, Washington, DC 20005. Call (202) 842–1300 for hotel reservations. Sleeping room rate: $115 plus taxes. Reservations must be made by January 28th.

2. February 17, 1999, 9 a.m. to 1 p.m., The Holiday Inn Golden Gateway, 1500 Van Ness Avenue, San Francisco, California 94109. Call 1–800–Holiday or (415) 441–4000 for hotel reservations. Sleeping room rates: $129 plus taxes. Reservations must be made by February 3rd.

3. February 19, 1999, 9 a.m. to 1 p.m., The Adams Marc Hotel, 1550 Court Place, Denver, Colorado 80202. Call 1–303–893–3333 for hotel reservations. Sleeping room rate: $80 plus taxes. Reservations must be made by February 5th.

Electronic Access to This Document

Anyone may view this document, as well as all other Department of Education documents published in the **Federal Register**, in Text or portable document format (pdf) on the World Wide Web at either of the following sites:

http://ocfo.ed.gov/fedreg/htm

http://ocfo.ed.gov/fedreg/html

To use the pdf, you must have the Adobe Acrobat Reader Program with Search, which is available free at either of the previous sites. If you have questions about using the pdf, call the U.S. Government Printing Office toll free at 1–888–293–6498.

Authority: Sec. 488 of Pub. L. 105–244, enacted October 7, 1998.

Dated: February 2, 1999.

David A. Longanecker,

Assistant Secretary for Postsecondary Education.

[FR Doc. 99–2917 Filed 2–5–99; 8:45 am]

BILLING CODE 4000–01–M

DEPARTMENT OF ENERGY

Federal Energy Regulatory Commission

[Docket No. CP99–169–000]

ANR Pipeline Company; Notice of Request Under Blanket Authorization

February 2, 1999.

Take notice that on January 21, 1999, ANR Pipeline Company (ANR, 500 Renaissance Center, Detroit, Michigan 48243, filed pursuant to Sections 157.205 and 157.211 of the Commission's Regulations under the Natural Gas Act (18 CFR 157.205, 157.211) for authorization to construct and operate an interconnection between ANR and Associated Electric Cooperative, Inc. (AECI) in Nodaway County, Missouri, all as more fully set forth in the request that is on file with the Commission and open to public inspection.

Specifically, ANR would construct and operate two 10-inch tap valve assemblies and osolating flanges, one each on ANR's 24-inch mainline and loopline; one 4-inch and one 6-inch turbine meter; a 2-inch positive displacement meter; an electronic measurement system; regulation and heater equipment; and approximately 400 feet of 10-inch pipe at an estimated cost of $659,000. ANR proposes to tie the proposed interconnection in with a 0.5-mile 10-inch line that AECI's would construct to connect to its power plant. ANR contends that the interconnection would provide a maximum daily volume of 57 Mmcf (through firm and interruptible services) to AECI's proposed power plant in Nodaway County. ANR indicates that these deliveries would be within the certificated entitlements of the customer.

Any person or the Commission's staff may, within 45 days after issuance of the instant notice by the Commission, file pursuant to Rule 214 of the Commission's Procedural Rules (18 CFR 385.214) a motion to intervene or notice of intervention and pursuant to Section 157.205 of the Regulations under the Natural Gas Act (18 CFR 157.205) a protest to the request. If no protest is filed within the time allowed therefor, the proposed activity shall be deemed to be authorized effective the day after the time allowed for filing a protest. If a protest is filed and not withdrawn within 30 days after the time allowed for filing a protest, the instant request shall be treated as an application for

authorization pursuant to Section 7 of the Natural Gas Act.

David P. Boergers,

Secretary.

[FR Doc. 99–2921 Filed 2–5–99; 8:45 am]

BILLING CODE 6717–01–M

DEPARTMENT OF ENERGY

Federal Energy Regulatory Commission

[Docket Nos. OA97–97–004; OA97–467–004; OA97–452–004; OA97–402–004; and OA97–460–004]

Atlantic City Electric Company; Delmarva Power and Light Company; Rochester Gas and Electric Corp.; Louisville Gas and Electric Company; Kentucky Utilities Company; Notice of Filing

January 27, 1999.

Take notice that above-named companies each filed revised standards of conduct on January 19, 1999 in response to the Commission's December 18, 1998 Order on Rehearing and Clarification. 85 FERC ¶ 61, 382 (1998).

Any person desiring to be heard or to protest said filing should file a motion to intervene or protest with the Federal Energy Regulatory Commission, 888 First Street, NE., Washington, DC 20426, in accordance with Rules 211 and 214 of the Commission's Rules of Practice and Procedure (18 CFR 385.211 and 18 CFR 385.214). All such motions and protests should be filed on or before February 11, 1999. Protests will be considered by the Commission to determine the appropriate action to be taken, but will not serve to make protestants parties to the proceedings. Any person wishing to become a party must file a motion to intervene. Copies of this filing are on file with the Commission and are available for public inspection.

Linwood A. Watson, Jr.,

Acting Secretary.

[FR Doc. 99–2873 Filed 2–5–99; 8:45 am]

BILLING CODE 6717–01–M

DEPARTMENT OF ENERGY

Federal Energy Regulatory Commission

[Docket No. RP99–211–000]

Colorado Interstate Gas Company; Notice of Proposed Changes in FERC Gas Tariff

February 2, 1999.

Take notice that on January 29, 1999, Colorado Interstate Gas Company (CIG), tendered for filing to become part of its FERC Gas Tariff, First Revised Volume No. 1, the tariff sheets listed on Appendix A attached to the filing, to be effective March 1, 1999.

CIG states that the purpose of this filing is to set forth the pro forma service agreements contained in its tariff the specific types of discounts that CIG may agree to enter into with its shippers.

CIG further states that copies of this filing have been served on WIC's jurisdictional customers and public bodies.

Any person desiring to be heard or to protest said filing should file a motion to intervene or a protest with the Federal Energy Regulatory Commission, 888 First Street, NE., Washington, DC 20426, in accordance with Sections 385.214 or 385.211 of the Commission's Rules and Regulations. All such motions or protests must be filed in accordance with Section 154.210 of the Commission's Regulations. Protests will be considered by the Commission in determining the appropriate action to be taken, but will not serve to make protestants parties to the proceedings. Any person wishing to become a party must file a motion to intervene. Copies of this filing are on file with the Commission and are available for public inspection in the Public Reference Room.

David P. Boergers,

Secretary.

[FR Doc. 99–2927 Filed 2–5–99; 8:45 am]

BILLING CODE 6717–01–M

DEPARTMENT OF ENERGY

Federal Energy Regulatory Commission

[Docket No. ER96–2921–012]

Duke Energy Trading and Marketing, L.L.C.; Notice of Filing

February 2, 1999.

Take notice that on January 14, 1999, Duke Energy Trading and Marketing, L.L.C., tendered for filing Notification of Change in Status. Duke Energy Trading and Marketing, L.L.C., seeks to notify the Commission that it has agreed to acquire NP Energy Inc., a power marketer.

Any person desiring to be heard or to protest said filing should file a motion to intervene or protest with the Federal Energy Regulatory Commission, 888 First Street, N.E., Washington, D.C. 20426, in accordance with Rules 211 and 214 of the Commission's Rules of Practice and Procedure (18 CFR 385.211 and 18 CFR 385.214). All such motions and protests should be filed on or before February 12, 1999. Protests will be considered by the Commission to determine the appropriate action to be taken, but will not serve to make protestants parties to the proceedings. Any person wishing to become a party must file a motion to intervene. Copies of this filing are on file with the Commission and are available for public inspection.

Linwood A. Watson, Jr.,

Acting Secretary.

[FR Doc. 99–2930 Filed 2–5–99; 8:45 am]

BILLING CODE 6717–01–M

DEPARTMENT OF ENERGY

Federal Energy Regulatory Commission

[Docket No. RP99–212–000]

El Paso Natural Gas Company; Notice of Proposed Changes in FERC Gas Tariff

February 2, 1999.

Take notice that on January 29, 1999, El Paso Natural Gas Company (El Paso) tendered for filing to become part of its FERC Gas Tariff, Second Revised Volume No. 1–A, the following revised tariff sheets to become effective March 1, 1999:

Second Revised Sheet No. 289
Fourth Revised Sheet No. 290

El Paso states that the tariff sheets are being filed to revise El Paso's right-of-first-refusal (ROFR) provisions to shorten the process and make it more practical. The modified ROFR provisions conform to El Paso's capacity release program, making it easier for shippers to use.

El Paso states that copies of the filing were served upon all shippers on El Paso's system and interested regulatory commissions.

Any person desiring to be heard or to protest said filing should file a motion to intervene or a protest with the Federal Energy Regulatory Commission, 888 First Street, NE, Washington, DC 20426, in accordance with Sections 385.214 or 385.211 of the Commission's Rules and Regulations. All such motions or protests must be filed in accordance with Section 154.210 of the Commission's Regulations. Protests will be considered by the Commission in determining the appropriate action to be taken, but will not serve to make protestants parties to the proceedings. Any person wishing to become a party must file a motion to intervene. Copies of this filing are on file with the Commission and are available for public

inspection in the Public Reference Room.

David P. Boergers,

Secretary.

[FR Doc. 99–2928 Filed 2–5–99; 8:45 am]

BILLING CODE 6717–01–M

DEPARTMENT OF ENERGY

Federal Energy Regulatory Commission

[Docket No. CP99–182–000]

Koch Gateway Pipeline Company; Notice of Application for Abandonment

February 2, 1999.

Take notice that on January 28, 1999, Koch Gateway Pipeline Company (Koch), P.O. Box 1478, Houston, Texas 77251 filed an application pursuant to Section 7(b) of the Natural Gas Act and Part 157 of the Commission's Regulations requesting permission and approval to abandon in place by sale to Creole Gas Pipeline Corporation (Creole), a Louisiana intrastate gas pipeline company, certain pipeline transmission, gathering and related compression and appurtenant facilities (commonly known as the Gloria Facilities) located in Lafourche, St. Bernard, Plaquemines, St. Charles, Jefferson and Terrebonne Parishes, Louisiana. The application is on file with the Commission and open to public inspection.

Any person desiring to be heard or to make any protest with reference to said application should on or before February 23, 1999, file with the Federal Energy Regulatory Commission, Washington, DC 20426, a motion to intervene or a protest in accordance with the requirements of the Commission's Rules of Practice and Procedure (18 CFR 385.211 and 385.214) and the regulations under the Natural Gas Act (18 CFR 157.10). All protests filed with the Commission will be considered by it in determining the appropriate action to be taken but will not serve to make the protestants parties to the proceeding. Any person wishing to become a party in any proceeding herein must file a motion to intervene in accordance with the Commission's rules.

Take further notice that, pursuant to the authority contained in and subject to the jurisdiction conferred upon the Commission by Sections 7 and 15 of the Natural Gas Act and the Commission's Rules of Practice and Procedure, a hearing will be held without further notice before the Commission or its designee on this application if no motion to intervene is filed within the time required herein, if the Commission on its own review of the matter finds that permission and approval for the proposed abandonment are required by the public convenience and necessity. If a motion for leave to intervene is timely filed, or if the Commission on its own motion believes that formal hearing is required, further notice of such hearing will be duly given.

Under the procedure herein provided for, unless otherwise advised, it will be unnecessary for Koch to appear or to be represented at the hearing.

David P. Boergers,

Secretary.

[FR Doc. 99–2923 Filed 2–5–99; 8:45 am]

BILLING CODE 6717–01–M

DEPARTMENT OF ENERGY

Federal Energy Regulatory Commission

[Docket No. EC99–27–000]

Maine Public Service Company and Energy Atlantic, LLC; Notice of Filing

January 28, 1999.

Take notice that on January 20, 1999, Maine Public Service Company (MPS) and Energy Atlantic, LLC (Energy Atlantic), a wholly-owned subsidiary of MPS, tendered for filing an application under section 203 of the Federal Power Act for MPS to dispose, by transfer to Energy Atlantic, of MPS's FERC Rate Schedule No. 29, a power sales agreement for the sale of energy and capacity by MPS to Houlton Water Company.

Any person desiring to be heard or to protest such filing should file a motion to intervene or protest with the Federal Energy Regulatory Commission, 888 First Street, NE, Washington, DC 20426, in accordance with Rules 211 and 214 of the Commission's Rules of Practice and Procedure (18 CFR 385.211 and 385.214). All such motions and protests should be filed on or before January 19, 1999. Protests will be considered by the Commission to determine the appropriate action to be taken, but will not serve to make protestants parties to the proceedings. Any person wishing to become a party must file a motion to intervene. Copies of this filing are on file with the Commission and are available for public inspection.

Linwood A. Watson, Jr.,

Acting Secretary.

[FR Doc. 99–2872 Filed 2–5–99; 8:45 am]

BILLING CODE 6717–01–M

DEPARTMENT OF ENERGY

Federal Energy Regulatory Commission

[Docket No. RP98–404–003]

Mississippi River Transmission Corporation; Notice of Filing

February 2, 1999.

Take notice that on January 29, 1999, Mississippi River Transmission Corporation (MRT) tendered for filing as part of its Gas Tariff, Third Revised Volume No. 1, the following revised tariff sheets to become effective March 17, 1999:

Substitute Second Revised Sheet No. 98
Substitute Third Revised Sheet No. 99
2nd Substitute Original Sheet No. 99A
2nd Substitute Original Sheet No. 99B
2nd Substitute Original Sheet No. 99C
2nd Substitute Original Sheet No. 99D
2nd Substitute Original Sheet No. 99E
Original Sheet No. 99F
Original Sheet No. 99G
Substitute Second Revised Sheet No. 185

MRT states that the purpose of this filing is to set forth the method MRT will use to allocate firm capacity that becomes available for subscription on MRT's system. MRT states that the revised tariff sheets are in response to concerns and suggestions made at the Technical Conference and the concerns noted in the Commission order of October 14, 1998.

MRT states that a copy of this filing is being mailed to each of MRT's customers and to the state commissions of Arkansas, Illinois and Missouri.

Any person desiring to protest this filing should file a protest with the Federal Energy Regulatory Commission, 888 First Street, N.E., Washington, D.C. 20426, in accordance with Section 385.211 of the Commission's Rules and Regulations. All such protests must be filed as provided in Section 154.210 of the Commission's Regulations. Protests will be considered by the Commission in determining the appropriate action to be taken, but will not serve to make protestants parties to the proceedings. Copies of this filing are on file with the Commission and are available for public inspection in the Public Reference Room.

David P. Boergers,

Secretary.

[FR Doc. 99–2924 Filed 2–5–99; 8:45 am]

BILLING CODE 6717–01–M

DEPARTMENT OF ENERGY

Federal Energy Regulatory Commission

[Docket No. RP99–68–002]

NorAm Gas Transmission Company; Notice of Proposed Changes in FERC Gas Tariff

February 2, 1999.

Take notice that on January 28, 1999, NorAm Gas Transmission Company (ANGT) tendered for filing as part of its FERC Gas Tariff, Fourth Revised Volume No. 1, the following tariff sheet to be effective November 1, 1998:

Substitute First Revised Sheet No. 208A

ANGT states that the purpose of this filing is to comply with the Commissions Letter Order issued January 15, 1999 in Docket No. RP99–68–001.

Any person desiring to protest this filing should file a protest with the Federal Energy Regulatory Commission, 888 First Street, NE, Washington, DC 20426, in accordance with Section 385.211 of the Commission's Rules and Regulations. All such protests must be filed as provided in Section 154.210 of the Commission's Regulations. Protests will be considered by the Commission in determining the appropriate action to be taken, but will not serve to make protestants parties to the proceedings. Copies of this filing are on file with the Commission and are available for public inspection in the Public Reference Room.

David P. Boergers,

Secretary.

[FR Doc. 99–2926 Filed 2–5–99; 8:45 am]

BILLING CODE 6717–01–M

DEPARTMENT OF ENERGY

Federal Energy Regulatory Commission

[Docket No. CP99–177–000]

Northwest Pipeline Corporation; Notice of Request Under Blanket Authorization

February 2, 1999.

Take notice that on January 27, 1999, Northwest Pipeline Corporation (Northwest) 295 Chipeta Way, Salt Lake City, Utah 84158, filed in Docket No. CP98–177–000 a request pursuant to Sections 157.205 and 157.216 and 211 of the Commission's Regulations under the Natural Gas Act (18 CFR 157.205, 157.216, and 211) for authorization to abandon certain existing undersized facilities and to construct and operate upgraded replacement facilities, all as more fully set forth in the request that is on file with the Commission and open to public inspection.

Northwest states that as a result of the proposed upgrade, the maximum design capacity of the meter station would increase from approximately 8,300 Dth per day to approximately 10,650 Dth per day. Northwest also estimates the cost of the proposed upgrade to be approximately $2,000.

Any person or the Commission's staff may, within 45 days after issuance of the instant notice by the Commission, file pursuant to Rule 214 of the Commission's Procedural Rules (18 CFR 385.214) a motion to intervene or notice of intervention and pursuant to Section 157.205 of the Regulations under the Natural Gas Act (18 CFR 157.205) a protest to the request. If no protest is filed within the time allowed therefor, the proposed activity shall be deemed to be authorized effective the day after the time allowed for filing a protest. If a protest is filed and-not withdrawn within 30 days after the time allowed for filing a protest, the instant request shall be treated as an application for authorization pursuant to Section 7 of the Natural Gas Act.

David P. Boergers,

Secretary.

[FR Doc. 99–2922 Filed 2–5–99; 8:45 am]

BILLING CODE 6717–01–M

DEPARTMENT OF ENERGY

Federal Energy Regulatory Commission

[Docket No. CP98–540–000]

Transcontinental Gas Pipe Line Corporation; Notice of Meeting

February 2, 1999.

At the request of U.S. Representative Bill Pascrell, Jr., of New Jersey, Commission staff will attend a meeting on February 8, 1999, to describe the Commission's environmental processes and procedures. The meeting will be held at the former Assembly of God Church in Nutley, New Jersey, located at the corner of Bloomfield and Milton Avenues. The meeting will begin at 8:00 PM and adjourn no later than 10:00 PM.

Additional information about the meeting is available from Paul McKee in the Commission's Office of External Affairs at (202) 208–1088.

David P. Boegers,

Secretary.

[FR Doc. 99–2874 Filed 2–5–99; 8:45 am]

BILLING CODE 6717–01–M

DEPARTMENT OF ENERGY

Federal Energy Regulatory Commission

[Docket No. TM99–4–29–000]

Transcontinental Gas Pipe Line Corporation; Notice of Proposed Changes in FERC Gas Tariff

February 2, 1999.

Take notice that on January 27, 1999 Transcontinental Gas Pipe Line Corporation (Transco) tendered for filing to become part of its FERC Gas Tariff, Third Revised Volume No. 1, certain revised tariff sheets, which tariff sheets are enumerated in Appendix A attached to the filing, to be effective December 1, 1998, January 1, 1999 and February 1, 1999.

Transco states that the purpose of the instant filing is to track rate changes attributable to transportation service purchased from Texas Gas Transmission Corporation (Texas Gas) under its Rate Schedule FT the costs of which are included in the rates and charges payable under Transco's Rate Schedule FT–NT, and storage service purchased from CNG Transmission Corporation (CNG) under its Rate Schedule GSS the costs of which are included in the rates and charges payable under Transco's Rate Schedules GSS and LSS.

Transco states that the filing is being made pursuant to tracking provisions under Section 4 of Transco's Rate Schedule FT, Section 3 of Transco's Rate Schedule GSS and Section 4 of Transco's Rate Schedule LSS.

Transco states that included in Appendices B and C attached to the filing are the explanations of the rate changes and details regarding the computation of the revised Rate Schedule FT–NT, GSS and LSS rates.

Transco states that copies of the filing are being mailed to each of its FT–NT, GSS and LSS customers and interested State Commission.

Any person desiring to be heard or to protest said filing should file a motion to intervene or a protest with the Federal Energy Regulatory Commission, 888 First Street, N.E., Washington, D.C. 20426, in accordance with Sections 385.214 or 385.211 of the Commission's Rules and Regulations. All such motions or protests must be filed in accordance with section 154.210 of the Commission's Regulations. Protests will be considered by the Commission in determining the appropriate action to be taken, but will not serve to make protestants parties to the proceedings. Any person wishing to become a party must file a motion to intervene. Copies of this filing are on file with the

Commission and are available for public inspection in the Public Reference Room.

David P. Boergers,

Secretary.

[FR Doc. 99–2929 Filed 2–5–99; 8:45 am]

BILLING CODE 6717–01–M

DEPARTMENT OF ENERGY

Federal Energy Regulatory Commission

[Docket No. RP99–210–000]

Viking Gas Transmission Company; Notice of Filing

February 2, 1999.

Take notice that on January 29, 1999, Viking Gas Transmission Company (Viking) tendered for filing a report of penalty revenues and credits for the period of November 1, 1997 through October 31, 1998.

Viking states that copies of the filing have been mailed to all of its jurisdictional customers and to affected state regulatory commissions.

Any person desiring to be heard or to protest said filing should file a motion to intervene or a protest with the Federal Energy Regulatory Commission, 888 First Street, NE, Washington, DC 20426, in accordance with Sections 385.214 or 385.211 of the Commission's Rules and Regulations. All such motions or protests must be filed in accordance with Section 154.210 of the Commission's Regulations. Protests will be considered by the Commission in determining the appropriate action to be taken, but will not serve to make protestants parties to the proceedings. Any person wishing to become a party must file a motion to intervene. Copies of this filing are on file with the Commission and are available for public inspection in the Public Reference Room.

David P. Boergers,

Secretary.

[FR Doc. 99–2925 Filed 2–5–99; 8:45 am]

BILLING CODE 6717–01–M

DEPARTMENT OF ENERGY

Federal Energy Regulatory Commission

[Docket No. ER96–1503–011, et al.]

Eagle Gas Marketing Company, et al.; Electric Rate and Corporate Regulation Filings

January 29, 1999.

Take notice that the following filings have been made with the Commission:

1. Eagle Gas Marketing Company

[Docket No. ER96–1503–011]

Take notice that on January 15, 1999, the above-mentioned power marketer filed a quarterly report with the Commission in the above-mentioned proceeding for information only. This filing is available for public inspection and copying in the Public Reference Room or on the internet under Records Information Management System (RIMS) for viewing and downloading.

2. InterCoast Power Marketing Co.; Atlanta Gas Light Services, Inc.; CU Power Canada Limited; North American Energy Conservation Inc.; The Green Power Connection, Inc.; Electrade Corporation; NYSEG Solutions, Inc.

[Docket Nos. ER94–6–012; ER97–542–006; ER98–4582–001; ER94–152–020 and EL94–9–000; ER97–3888–006; ER94–1478–014; and ER99–220–000]

Take notice that on January 26, 1999, the above-mentioned power marketers filed quarterly reports with the Commission in the above-mentioned proceedings for information only. These filings are available for public inspection and copying in the Public Reference Room or on the internet under Records Information Management System (RIMS) for viewing and downloading.

3. The Furst Group, Inc.; Advantage Energy, Inc.; Mid American Natural Resources, Inc.; Cook Inlet Energy Supply; Keystone Energy Services, Inc.; Astra Power, LLC; FirstEnergy Trading and Power Marketing, Inc.; Niagara Energy & Steam Co., Inc.; Seagull Power Services Inc.; Alpena Power Marketing, L.L.C.; Central Hudson Enterprises Corporation

[Docket Nos. ER98–2423–001; ER97–2758–004; ER95–1423–000; ER96–1410–012; ER97–3053–005; ER98–3378–003; ER95–1295–011; ER97–1414–004; ER96–342–011; ER97–4745–005; and ER97–2869–006]

Take notice that on January 25, 1999, the above-mentioned power marketers filed quarterly reports with the Commission in the above-mentioned proceedings for information only. These filings are available for public inspection and copying in the Public Reference Room or on the internet under Records Information Management System (RIMS) for viewing and downloading.

4. Hafslund Energy Trading LLC; TECO EnergySource, Inc.; Golden Valley Power Company; Granger Energy, L.L.C.; Sparc, L.L.C.; Rocky Mountain Natural Gas & Electric L.L.C.; Black Hills Energy Resources, Inc.; WPS Energy Services, Inc.; ProLiance Energy, LLC; COM/Energy Marketing, Inc.; Cogentrix Energy Power Marketing, Inc.; AYP Energy, Inc.; CSW Energy Services, Inc.

[Docket Nos. ER98–2535–001; ER96–1563–012; ER98–4334–001; ER97–4240–002; ER98–2671–001; ER98–3108–001; ER95–1415–006; ER96–1088–021; ER97–420–008; ER98–449–004; ER95–1739–014; ER96–2673–009; and ER98–2075–004]

Take notice that on January 25, 1999, the above-mentioned power marketers filed quarterly reports with the Commission in the above-mentioned proceedings for information only. These filings are available for public inspection and copying in the Public Reference Room or on the internet under Records Information Management System (RIMS) for viewing and downloading.

5. FPL Energy Power Marketing, Inc.; FPL Energy Maine Hydro, Inc.; FPL Energy Mason, LLC; FPL Energy Wyman, LLC; FPL Energy Wyman IV, LLC; FPL Energy AVEC, LLC

[Docket Nos. ER98–3566–000 and ER98–3566–001; ER98–3511–000 and ER98–3511–001; ER98–3562–000 and ER98–3562–001; ER98–3563–001; ER98–3564–001 and ER98–3565–001]

Take notice that on January 26, 1999, the above-mentioned power marketers filed quarterly reports with the Commission in the above-mentioned proceedings for information only. These filings are available for public inspection and copying in the Public Reference Room or on the internet under Records Information Management System (RIMS) for viewing and downloading.

6. Yadkin, Inc.

[Docket No. ER99–1461–000]

Take notice that on January 26, 1999, Yadkin, Inc. tendered for filing a summary of activity for the quarter ending December 31, 1998.

Comment date: February 16, 1999, in accordance with Standard Paragraph E at the end of this notice.

7. PECO Energy Company

[Docket No. ER99–1464–000]

Take notice that on January 26, 1999, PECO Energy Company (PECO) filed a summary of transactions made during the fourth quarter of calendar year 1998 under PECO's Electric Tariff Original Volume No. 1 accepted by the

Commission in Docket No. ER95–770–000, as subsequently amended and accepted by the Commission in Docket No. ER97–316–000.

Comment date: February 16, 1999, in accordance with Standard Paragraph E at the end of this notice.

8. Elwood Marketing, LLC

[Docket No. ER99–1465–000]

Take notice that on January 26, 1999, Elwood Marketing, LLC tendered for filing its proposed FERC Electric Rate Schedule No. 1 and requested certain waivers of the Commission Regulations.

Comment date: February 12, 1999, in accordance with Standard Paragraph E at the end of this notice.

9. Baltimore Gas and Electric Company

[Docket No. ER99–1466–000]

Take notice that on January 26, 1999, Baltimore Gas and Electric Company (BGE), tendered for filing a Service Agreement with Citizens Power Sales, dated November 30, 1998 under BGE's FERC Electric Tariff Original Volume No. 3 (Tariff). Under the tendered Service Agreement, BGE agrees to provide services to Citizens Power Sales under the provisions of the Tariff.

BGE requests an effective date of November 30, 1998, for the Service Agreement. BGE states that a copy of the filing was served upon the Public Service Commission of Maryland.

Comment date: February 12, 1999, in accordance with Standard Paragraph E at the end of this notice.

10. Baltimore Gas and Electric Company

[Docket No. ER99–1467–000]

Take notice that on January 26, 1999, Baltimore Gas and Electric Company (BGE), tendered for filing a Service Agreement with Exelon Energy, dated January 4, 1999 under BGE's FERC Electric Tariff Original Volume No. 3 (Tariff). Under the tendered Service Agreement, BGE agrees to provide services to Exelon Energy under the provisions of the Tariff.

BGE requests an effective date of January 4, 1999, for the Service Agreement. BGE states that a copy of the filing was served upon the Public Service Commission of Maryland.

Comment date: February 12, 1999, in accordance with Standard Paragraph E at the end of this notice.

11. Niagara Mohawk Power Corporation

[Docket No. ER99–1469–000]

Take notice that on January 26, 1999, Niagara Mohawk Power Corporation (Niagara Mohawk), tendered for filing with the Federal Energy Regulatory Commission an executed Transmission Service Agreement between Niagara Mohawk and PG&E Energy Services Corporation (PG&E). This Transmission Service Agreement specifies that PG&E has signed on to and has agreed to the terms and conditions of Niagara Mohawk's Open Access Transmission Tariff as filed in Docket No. OA96–194–000. This Tariff, filed with FERC on July 9, 1996, will allow Niagara Mohawk and PG&E to enter into separately scheduled transactions under which Niagara Mohawk will provide transmission service for PG&E as the parties may mutually agree.

Niagara Mohawk requests an effective date of January 8, 1999. Niagara Mohawk has requested waiver of the notice requirements for good cause shown.

Niagara Mohawk has served copies of the filing upon the New York State Public Service Commission and PG&E.

Comment date: February 12, 1999, in accordance with Standard Paragraph E at the end of this notice.

12. Sempra Energy Trading Corp.

[Docket No. ER99–1473–000]

Take notice that on January 26, 1999, Sempra Energy Trading Corp. (SET), tendered for filing pursuant to Rule 205, 18 CFR 285.205, a petition for blanket waivers and blanket approvals under various regulations of the Commission and for an order accepting its FERC Electric Rate Schedule No. 12 (Ancillary Services—Arizona and Nevada) to be effective without suspension.

SET intends to sell certain ancillary services at wholesale to four transmission providers—Arizona Public Service Company, Tucson Electric Power Company, Salt River Project, and Nevada Power Company—and to their transmission customers who opt to self-procure. The ancillary services that SET proposes to sell are Regulation and Frequency Control, Spinning Reserve Service, and Supplemental Reserve Service. SET proposes to sell these services subject to rates, terms and conditions to be negotiated with the buyer. Rate Schedule No. 12 provides for the sale of the foregoing ancillary services at market-based rates.

SET states that it has served copies of its filing on the Nevada Public Utilities Commission and on the Arizona Corporation Commission.

Comment date: February 12, 1999, in accordance with Standard Paragraph E at the end of this notice.

13. Indeck-Pepperell Power Associates, Inc.

[Docket No. ER99–1474–000]

Take notice that on January 26, 1999, Indeck-Pepperell Power Associates, Inc. (Indeck-Pepperell), tendered for filing with the Federal Energy Regulatory Commission a Power Purchase and Sale Agreement between Indeck Pepperell and Select Energy, Inc. (Select), dated December 10, 1998, for service under Indeck Pepperell's Rate Schedule FERC No. 1.

Indeck Pepperell requests that the Service Agreement be made effective as of December 10, 1998.

Comment date: February 12, 1999, in accordance with Standard Paragraph E at the end of this notice.

14. New England Power Company

[Docket No. ER99–1476–000]

Take notice that on January 26, 1999, New England Power Company submitted for filing its response to the Commission's order in North American Electric Reliability Council, 85 FERC ¶ 61,353 (1998).

Comment date: February 25, 1999, in accordance with Standard Paragraph E at the end of this notice.

15. Industrial Energy Applications, Inc.

[Docket No. ER99–1477–000]

Take notice that on January 26, 1999, Industrial Energy Applications, Inc. (IEA), filed with the Commission a Notice of Cancellation of IEA's Rate Schedule FERC No. 1, which authorizes IEA to sell electricity at market-based rates.

IEA requests that the cancellation be made effective as of January 1, 1999, and seeks waiver of the Commission's notice requirements. IEA states that there are no current purchasers under Rate Schedule No. 1, who would be affected by the cancellation.

Comment date: February 12, 1999, in accordance with Standard Paragraph E at the end of this notice.

16. Central Vermont Public Service Corporation

[Docket No. ER99–1489–000]

Take notice that on January 26, 1999, Central Vermont Public Service Corporation (Central Vermont), tendered for filing a Service Agreement for Market Rate Power Sales with PP&L, Inc., under its FERC Electric Tariff No. 8.

Central Vermont requests waiver of the Commission's Regulations to permit the service agreement to become effective on January 27, 1999.

Comment date: February 12, 1999, in accordance with Standard Paragraph E at the end of this notice.

17. Lyndell E. Maddox; Mark C. Cowan; J. Stephen Gilbert

[Docket Nos. ID–3137–002; ID–3141–002; and ID–3147–001]

Take notice that on January 19, 1999, PG&E Energy Trading—Power Holdings Corporation (PGET), with its principal place of business at 1100 Louisiana, Suite 1000, Houston, Texas 77002 filed with the Federal Energy Regulatory Commission a Notice of Changes with respect to interlocking positions held by the above-named individuals.

Comment date: February 18, 1999, in accordance with Standard Paragraph E at the end of this notice.

18. Allegheny Power Service Corporation; Monongahela Power Company; The Potomac Edison Company; West Penn Power Company; American Electric Power Service Corporation; Appalachian Power Company; Columbus Southern Power Company; Indiana Michigan Power Company; Kentucky Power Company; Kingsport Power Company; Ohio Power Company; Wheeling Power Company; Commonwealth Edison Company; Commonwealth Edison Company of Indiana, Inc.; Consolidated Edison Company of New York, Inc.; Illinois Power Company; Wisconsin Electric Power Company

[Docket Nos. OA97–117–008; OA97–408–007; OA97–459–008; OA97–279–007; OA97–126–007; and OA97–216–007]

Take notice that the companies listed in the above-captioned dockets submitted revised standards of conduct and/or revised the organizational charts and job descriptions posted on OASIS in response to the Commission's December 18, 1998 order on standards of conduct.[1]

The December 18, 1998 order accepted the standards of conduct submitted by Illinois Power Company and Wisconsin Electric Power Company but required them to revise their organizational charts and job descriptions posted on OASIS within 30 days. These companies did not make any filings with the Commission (nor were they required to). However, by this notice, the public is invited to intervene, protest or comment regarding their revised organizational charts and job descriptions.

Comment date: February 16, 1999, in accordance with Standard Paragraph E at the end of this notice.

[1] Allegheny Power Service Corporation, 85 FERC ¶ 61,390 (1998).

19. Western Resources, Inc.

[Docket No. OA97–312–003]

Take notice that Western Resources, Inc., submitted revised standards of conduct on January 7 and 19, 1999 in response to the Commission's September 29, 1998 Order on Standards of Conduct, 85 FERC ¶ 61,382 (1998).

Comment date: February 16, 1999, in accordance with Standard Paragraph E at the end of this notice.

Standard Paragraphs

E. Any person desiring to be heard or to protest said filing should file a motion to intervene or protest with the Federal Energy Regulatory Commission, 888 First Street, NE, Washington, DC 20426, in accordance with Rules 211 and 214 of the Commission's Rules of Practice and Procedure (18 CFR 385.211 and 18 CFR 385.214). All such motions or protests should be filed on or before the comment date. Protests will be considered by the Commission in determining the appropriate action to be taken, but will not serve to make protestants parties to the proceeding. Any person wishing to become a party must file a motion to intervene. Copies of these filings are on file with the Commission and are available for public inspection.

David P. Boergers,

Secretary.

[FR Doc. 99–2919 Filed 2–5–99; 8:45 am]

BILLING CODE 6717–01–P

DEPARTMENT OF ENERGY

Federal Energy Regulatory Commission

[Docket No. ER99–1493–000, et al.]

Indeck-Pepperell Power Associates, Inc., et al.; Electric Rate and Corporate Regulation Filings

February 1, 1999.

Take notice that the following filings have been made with the Commission:

1. Indeck-Pepperell Power Associates, Inc.

[Docket No. ER99–1493–000]

Take notice that on January 21, 1999, Indeck-Pepperell Power Associates, Inc. (IPA) tendered for filing a summary of activity for the quarter ending December 31, 1998.

Comment date: February 16, 1999, in accordance with Standard Paragraph E at the end of this notice.

2. New York State Electric & Gas Corporation

[Docket No. ER99–1494–000]

Take notice that on January 26, 1999, New York State Electric & Gas Corporation filed the Summary of Quarterly Activity for the calendar year quarter ending December 31, 1998 pursuant to Section 205 of the Federal Power Act, 16 U.S.C. § 824d (1985), and Part 35 of the Commission's Rules of Practice and Procedure, 18 CFR Part 35, and in accordance with Ordering Paragraph J of the Federal Energy Regulatory Commission's December 14, 1998 order in Docket No. ER99–221–000.

Comment date: February 16, 1999, in accordance with Standard Paragraph E at the end of this notice.

3. Mountainview Power Company

[Docket No. ER99–1495–000]

Take notice that on January 26, 1999, Mountainview Power Company (Mountainview) tendered for filing pursuant to the Commission's October 16, 1998 Order issued in Docket ER98–4301-000, Mountainview's quarterly transaction report for the calendar quarter ending December 31, 1998.

Comment date: February 16, 1999, in accordance with Standard Paragraph E at the end of this notice.

4. Riverside Canal Power Company

[Docket No. ER99–1496–000]

Take notice that on January 26, 1999, Riverside Canal Power Company (Riverside) tendered for filing pursuant to the Commission's October 16, 1998 Order issued in Docket ER98–4302-000, Riverside's quarterly transaction report for the calendar quarter ending December 31, 1998.

Comment date: February 16, 1999, in accordance with Standard Paragraph E at the end of this notice.

5. NGE Generation, Inc.

[Docket No. ER99–1502–000]

Take notice that on January 27, 1999, NGE Generation, Inc. filed the Summary of Quarterly Activity for the calendar year quarter ending December 31, 1998, pursuant to Section 205 of the Federal Power Act, 16 U.S.C. § 824d (1985), and Part 35 of the Commission's Regulations, 18 CFR Part 35, and in accordance with Ordering Paragraph J of the Federal Energy Regulatory Commission's June 9, 1997 order in Docket No. ER97–2518–000.

Comment date: February 16, 1999, in accordance with Standard Paragraph E at the end of this notice.

6. Tucson Electric Power Company

[Docket No. ER99–1503–000]

Take notice that on January 27, 1999, Tucson Electric Power Company (Tucson), tendered for filing a Transaction Report regarding power purchases and sales under its Market-Based Power Sales Tariff for Affiliate Sales for quarter ended December 31, 1998.

Comment date: February 16, 1999, in accordance with Standard Paragraph E at the end of this notice.

7. Tucson Electric Power Company

[Docket No. ER99–1504–000]

Take notice that on January 27, 1999, Tucson Electric Power Company (Tucson), tendered for filing a Transaction Report regarding power purchases and sales under its Market-Based Power Sales Tariff for quarter ended December 31, 1998.

Comment date: February 16, 1999, in accordance with Standard Paragraph E at the end of this notice.

8. Niagara Mohawk Power Corporation

[Docket No. ER99–1505–000]

Take notice that on January 27, 1999, Niagara Mohawk Power Corporation tendered for filing its Quarterly Sales and Services Summary for the quarters ending September 30, 1998 and December 31, 1998 as required by the Commission's Order dated September 25, 1996 in Docket No. ER96–2585–000.

A copy of the filing has been served upon the New York Public Service Commission.

Comment date: February 16, 1999, in accordance with Standard Paragraph E at the end of this notice.

9. PacifiCorp

[Docket No. ER99–1506–000]

Take notice that on January 27, 1999, PacifiCorp tendered for filing in accordance with the Commission's June 26, 1997 Order under FERC Docket No. ER97–2801–000, a Report showing PacifiCorp's transactions under PacifiCorp's FERC Electric Tariff, Original Volume No. 12 for the quarter ending on December 31, 1999.

Copies of this filing were supplied to the Washington Utilities and Transportation Commission and the Public Utility Commission of Oregon.

Comment date: February 16, 1999, in accordance with Standard Paragraph E at the end of this notice.

10. Unitil Power Corp.

[Docket No. ER99–1511–000]

Take notice that on January 28, 1999, Unitil Power Corp. tendered for filing a summary of activity for the quarter ending December 31, 1998.

Comment date: February 17, 1999, in accordance with Standard Paragraph E at the end of this notice.

11. Fitchburg Gas and Electric Light Company

[Docket No. ER99–1512–000]

Take notice that on January 28, 1999, Fitchburg Gas and Electric Light Company tendered for filing a summary of activity for the quarter ending December 31, 1998

Comment date: February 17, 1999, in accordance with Standard Paragraph E at the end of this notice.

12. Great Bay Power Corporation

[Docket No. ER99–1517–000]

Take notice that on January 28, 1999 Great Bay Power Corporation tendered for filing a revised summary of activity for the quarter ending December 31, 1998.

Comment date: February 17, 1999, in accordance with Standard Paragraph E at the end of this notice.

13. Medical Area Total Energy Plant Plant, Inc.

[Docket No. ER99–1518–000]

Take notice that on January 28, 1999, Medical Area Total Energy Plant, Inc. (MATEP) tendered for filing a summary of activity for the quarter ending December 31, 1998.

Comment date: February 17, 1999, in accordance with Standard Paragraph E at the end of this notice.

14. CLECO Corporation

[Docket No. ER99–1519–000]

Take notice that on January 28, 1999, CLECO Corporation, tendered for filing CLECO Corporation Market Based Rate Tariff MR–1, the quarterly report for transactions undertaken by CLECO Corporation for the quarter ending December 31, 1998.

CLECO Corporation states that a copy of the filing has been served on the Louisiana Public Service Commission.

Comment date: February 17, 1999, in accordance with Standard Paragraph E at the end of this notice.

15. California Power Exchange

[Docket No. ER99–1521–000]

Take notice that on January 28, 1999, the California Power Exchange Corporation (PX) tendered for filing its quarterly indices of customers subject to PX Participation Agreements and Meter Services Agreements. The indices cover the period ending December 31, 1998.

The PX states that it has served copies of its filing on the affected customers and on the California Public Utilities Commission.

Comment date: February 17, 1999, in accordance with Standard Paragraph E at the end of this notice.

16. Florida Power Corporation

[Docket No. ER99–1524–000]

Take notice that on January 28, 1999, Florida Power Corporation submitted a report of short-term transactions that occurred under its Market-Based Rate Wholesale Power Sales Tariff (FERC Electric Tariff, First Revised Volume No. 8) during the quarter ending December 31, 1999.

Comment date: February 17, 1999, in accordance with Standard Paragraph E at the end of this notice.

17. Avista Corporation

[Docket No. ER99–1531–000]

Take notice that on January 28, 1999, Avista Corporation, formerly The Washington Water Power Company, tendered for filing its summary of activity for the quarter ending December 31, 1998 under its FERC Electric Tariff Original Volume No. 9.

Comment date: February 17, 1999, in accordance with Standard Paragraph E at the end of this notice.

18. GEN-SYS Energy

[Docket No. ER99–1532–000]

Take notice that on January 28, 1999, GEN-SYS Energy (GSE) tendered for filing with the Federal Energy Regulatory Commission, a market summary activity for GSE for the quarter ending December 31, 1998.

Comment date: February 17, 1999, in accordance with Standard Paragraph E at the end of this notice.

19. Western Resources, Inc.

[Docket No. ER99–1535–000]

Take notice on January 28, 1999, Western Resources, Inc., tendered for filing a summary of sales under its Market-Based Power Sales Tariff for the quarter ending December 31, 1998.

Comment date: February 17, 1999, in accordance with Standard Paragraph E at the end of this notice.

Standard Paragraphs

E. Any person desiring to be heard or to protest said filing should file a motion to intervene or protest with the Federal Energy Regulatory Commission, 888 First Street, N.E., Washington, D.C. 20426, in accordance with Rules 211 and 214 of the Commission's Rules of Practice and Procedure (18 CFR 385.211 and 18 CFR 385.214). All such motions or protests should be filed on or before the comment date. Protests will be

considered by the Commission in determining the appropriate action to be taken, but will not serve to make protestants parties to the proceeding. Any person wishing to become a party must file a motion to intervene. Copies of these filings are on file with the Commission and are available for public inspection.

David P. Boergers,

Secretary.

[FR Doc. 99–2920 Filed 2–5–99; 8:45 am]

BILLING CODE 6717–01–P

DEPARTMENT OF ENERGY

Federal Energy Regulatory Commission

Sunshine Act Meeting

February 3, 1999.

The following notice of meeting is published pursuant to section 3(A) of the Government in the Sunshine Act (Pub. L. No. 94–409), 5 U.S.C. 552B:

AGENCY HOLDING MEETING: Federal Energy Regulatory Commission.

DATE AND TIME: February 10, 1999, 10:00 a.m.

PLACE: Room 2C, 888 First Street, N.E., Washington, D.C. 20426.

STATUS: Open.

MATTERS TO BE CONSIDERED: Agenda.

Note: Items listed on the agenda may be deleted without further notice.

CONTACT PERSON FOR MORE INFORMATION: David P. Boergers, Secretary, Telephone (202) 208–0400, for a recording listing items stricken from or added to the meeting, call (202) 208–1627.

This is a list of matters to be considered by the commission. It does not include a listing of all papers relevant to the items on the agenda; however, all public documents may be examined in the reference and information center.

Consent Agenda—Hydro

713th Meeting—February 10, 1999, Regular Meeting (10:00 A.M.)

CAH–1. Docket# P–9951, 051, Township of Van Buren, Michigan and Sts Hydropower Ltd.

CAH–2.
- Docket# P–2311, 016, Crown Vantage—New Hampshire Electric, Inc.
- Other#S P–2311, 024, Crown Vantage—New Hampshire Electric, Inc.

CAH–3. Docket# P–10813, 040, City of Summersville, West Virginia

CAH–4. Docket# P–2113, 091, Wisconsin Valley Improvement Company

CAH–5. Docket# P–10813, 041, City of Summersville, West Virginia

Consent Agenda—Electric

CAE–1. Docket# ER99–993, 000, Mid-Continent Area Power Pool

CAE–2.
- Docket# ER99–35, 000, Boston Edison Company
- Other#S EL99–7, 000, Boston Edison Company
- EL99–8, 000, Boston Edison Company

CAE–3.
- Docket# ER99–694, 000, Southern Energy Canal, L.L.C.
- Other# ER99–1024, 000, Southern Energy Canal, L.L.C.

CAE–4. Docket# ER99–1001, 000, CH Resources, Inc.

CAE–5. Docket# ER99–967, 000, Wisvest—Connecticut, L.L.C.

CAE–6.
- Docket# ER99–978, 000, Boston Edison Company
- Other#S EL99–31, 000, Boston Edison Company

CAE–7. Docket# ER99–1035, 000, Pacific Gas and Electric Company
- Other#S EL99–34, 000, Pacific Gas and Electric Company

CAE–8. Docket# ER99–970, 000, Rockgen Energy, LLC

CAE–9. Docket# ER99–1004, 000, Entergy Nuclear Generation Company

CAE–10. Docket# ER99–933, 000, California Power Exchange Corporation

CAE–11. Docket# TX97–1, 000, The Montana Power Company

CAE–12.
- Docket# ER90–373, 006, Northeast Utilities Service Company
- Other#S EL90–39, 003, Connecticut Light & Power Company V. Western Massachusetts Electric Company
- ER90–390, 006, Northeast Utilities Service Company

CAE–13. Docket# TX96–2, 000, City of College Station, Texas

CAE–14. Omitted

CAE–15. Docket# ER99–353, 001, Firstenergy Operating Companies

CAE–16. Omitted

CAE–17.
- Docket# ER98–3549, 001, Southern Company Energy Marketing, L.P.
- Other#S ER98–3551, 001, Conagra Energy Services, Inc.
- ER98–3552, 001, Southern Indiana Gas and Electric Company
- ER98–3556, 001, New Energy Ventures, L.L.C.
- ER98–3819, 001, Illinova Energy Partners, Inc.
- ER98–3885, 001, Firstenergy Trading & Power Marketing, Inc.
- ER98–3927, 001, Midcon Power Services Corporation
- ER98–3949, 001, Griffin Energy Marketing, L.L.C.
- ER98–3965, 001, Coral Power, L.L.C.
- ER98–3966, 001, Enron Power Marketing, Inc.
- ER98–3968, 001, Coral Power, L.L.C.
- ER98–3984, 001, British Columbia Power Exchange Corporation
- ER98–3986, 001, Entergy Power Marketing Corporation
- ER98–3992, 001, LG&E Energy Marketing, Inc.
- ER98–4015, 001, Washington Water Power Company
- ER98–4018, 001, Idaho Power Company
- ER98–4040, 001, PG&E Energy Trading-Power, L.P.
- ER98–4068, 001, AES Power, Inc.
- ER98–4078, 001, North American Energy Conservation, Inc.
- ER98–4100, 001, Duke/Louis Dreyfus, L.L.C.
- ER98–4101, 001, Duke Energy Trading and Marketing, L.L.C.
- ER98–4128, 001, Questar Energy Trading Company
- ER98–4131, 001, South Jersey Energy Company
- ER98–4132, 001, Portland General Electric Company
- ER98–4175, 001, NGE Generation, Inc.
- ER98–4176, 001, El Paso Energy Marketing Company

CAE–18. Docket# EL99–12, 000, Wisconsin Electric Power Company v. Northern States Power Company (Minnesota) and Northern States Power Company (Wisconsin)

CAE–19. Docket# RM95–9, 006, Open Access Same-Time Information System and Standards of Conduct

CAE–20. Docket# RM95–9, 003, Open Access Same-Time Information System (Oasis) and Standards of Conduct

CAE–21.
- Docket# NJ98–5, 001, Big Rivers Electric Corporation
- Other#s NJ97–7, 001, Department of Energy—Bonneville Power Administration
- NJ98–2, 002, Department of Energy—Southwestern Power Administration
- NJ98–3, 002, Salt River Project Agricultural Improvement and Power District
- NJ98–3, 003, Salt River Project Agricultural Improvement and Power District

CAE–22.
- Docket# OA97–105, 002, Carolina Power & Light Company
- Other#s OA97–184, 003, The Detroit Edison Company
- OA97–280, 003, Kansas City Power & Light Company
- OA97–287, 002, Central Power and Light Company, Public Service Company of Oklahoma, Southwestern Electric Power Company and West Texas Utilities Company
- OA97–407, 002, Duquesne Light Company
- OA97–422, 002, Central Maine Power Company
- OA97–432, 002, Central Louisiana Electric Company, Inc.
- OA97–433, 002, Public Service Company of New Mexico
- OA97–440, 002, Peco Energy Company
- OA97–446, 002, Utilicorp United, Inc.
- OA97–458, 002, Entergy Services, Inc., Entergy Arkansas, Inc., Entergy Gulf States, Inc., Entergy Louisiana, Inc. and Entergy Mississippi, Inc., et al.
- OA97–462, 002, Maine Electric Power Company
- OA97–720, 002, Public Service Company of New Mexico

CAE–23.
- Docket# EC96–19, 046, California Power Exchange Corporation

Other#s EL98–51, 001, Eric C. Woychik, et al. v. California Independent System Operator Corporation and California Electricity Oversight Board
ER96–1663, 048, California Power Exchange Corporation
CAE–24.
Docket# ER98–1581, 000, Atlantic City Electric Company, Baltimore Gas and Electric Company and Delmarva Power & Light Company, et al.
Other#s ER97–3189 014, PJM Interconnection, L.L.C.

Consent Agenda—Gas and Oil

CAG–1. Docket# RP99–202, 000. Northwest Alaskan Pipeline Company
CAG–2. Docket# RP98–206, 003, Atlanta Gas Light Company
CAG–3. Docket# RP99–167, 000, Tennessee Gas Pipeline Company
CAG–4. Docket# RP99–186, 000, Florida Gas Transmission Company
CAG–5.
Docket# TM99–1–20, 001, Algonquin Gas Transmission Company
Other#s TM99–1–20, 000, Algonquin Gas Transmission Company
CAG–6. Docket# RP99–7, 001, Paiute Pipeline Company
CAG–7. Docket# RP99–176, 001, Natural Gas Pipeline Company of America
CAG–8.
Docket# RP98–248, 003 Northwest Pipeline Corporation
Other#s RP98–248, 001, Northwest Pipeline Corporation
RP98–248, 002, Northwest Pipeline Corporation
CAG–9. Docket# RP98–158, 004, Noram Gas Transmission Company
CAG–10. Docket# RP97–406, 020, CNG Transmission Corporation
CAG–11.
Docket# RP97–369, 007, Public Service Company of Colorado, et al.
Other#s RP98–39, 015, Northern Natural Gas Company
RP98–40, 018, Panhandle Eastern Pipe Line Company
RP98–42, 011, ANR Pipeline Company
RP98–43, 010, Anadarko Gathering Company
RP98–52, 024, Williams Natural Gas Company
RP98–53, 017, K N Interstate Gas Transmission Company
RP98–54, 017, Colorado Interstate Gas Company
CAG–12.
Docket# RP98–52, 025, Williams Gas Pipelines Central, Inc.
Other#s GP98–3, 003, Oxy USA, Inc.
GP98–4, 003, Amoco Production Company
GP98–13, 003, Mobil Oil Corporation
GP98–16, 003, Union Pacific Resources Company
GP98–18, 003, Anadarko Petroleum Corporation
CAG–13.
Docket# RP98–310, 002, Natural Gas Pipeline Company of America
Other#s RP98–310, 001, Natural Gas Pipeline Company of America
CAG–14. Docket# RP99–69, 001, National Fuel Gas Supply Corporation
CAG–15. Docket# MG99–10, 000, Portland Natural Gas Transmission System
CAG–16. Docket# CP96–153, 005, Southern Natural Gas Company
CAG–17.
Docket# CP98–569, 001, Columbia Gas Transmission Corporation
Other#s CP98–568, 001, Norse Pipeline, LLC
CAG–18. Docket# CP98–596, 000, Columbia Gulf Transmission Company
CAG–19. Docket# CP97–549, 000, CNG Transmission Corporation
CAG–20. Docket# CP99–64, 000, Tristate Pipeline, L.L.C.
CAG–21. Docket# RP99–190, 000, National Fuel Gas Distribution Corporation

Hydro Agenda

H–1. Reserved

Electric Agenda

E–1. Reserved

Oil and Gas Agenda

I. Pipeline Rate Matters
PR–1. Reserved
II. Pipeline Certificate Matters
PC–1. Omitted
PC–2. Omitted
PC–3. Omitted

David P. Boergers,

Secretary.

[FR Doc. 99–3105 Filed 2–4–99; 12:19 pm]

BILLING CODE 6717–01–P

ENVIRONMENTAL PROTECTION AGENCY

[FRL–6300–1]

Water Programs Gap Analysis Public Meeting

AGENCY: Environmental Protection Agency (EPA).

ACTION: Notice.

SUMMARY: The Environmental Protection Agency has initiated a study to identify annual funding needs at the local level for carrying out drinking water and wastewater programs, to compare these needs to current expenditures for these programs, and to identify alternative approaches for addressing the anticipated gap between needs and current expenditures. All local level programs and activities eligible for financial support from EPA's Clean Water and Drinking Water State Revolving Funds as well as other Federal, State and local assistance programs will be covered in this study. This would include municipal/community wastewater treatment facilities, sanitary sewers, combined sewer overflows, stormwater sewers and treatment facilities, nonpoint source needs, estuary program needs, and drinking water treatment facilities and distribution lines. The study will address both capital and operating costs.

The Agency will hold a public meeting on March 18, 1999, to present its approach to preparing estimates and the preliminary results, and to take comments and suggestions from interested parties. The meeting is open and all interested persons are invited to attend on a space-available basis. Persons interested in attending the meeting are requested to register by calling Debra Renwick no later than Friday, March 12, 1999.

DATES: The meeting will be held from 8:30 a.m. to 5 p.m. on Thursday, March 18, 1999.

ADDRESSES: The meeting will be held in Cavalier Rooms C and D at the Sheraton National Hotel, Columbia Pike and Washington Boulevard, Arlington, VA 22204.

FOR FURTHER INFORMATION CONTACT: For information concerning this meeting or the Agency's effort to estimate public infrastructure costs, please contact Sandra L. Perrin at (202) 260–7382, or via e-mail at ''perrin.sandra@epamail.epa.gov.'' EPA expects to make informational materials available both before and after the meeting. Persons wishing to be included in the distribution list should contact Debra A. Renwick at (202) 260–5859, or via e-mail at ''renwick.debra@epamail.epa.gov.'' The materials will also be posted on the Internet at: ''http://161.80.11.87/water/formula.nsf/?Open.'' Click on ''Gap Analyses'' and then on ''Local Level Costs.''

In particular, EPA expects to make available a draft of the report on funding needs and gaps at the local level, together with a summary of major issues, before the public meeting. These materials will be posted on the Internet site (address above) on or about March 12, 1999. Interested persons are requested to consult the web page for a copy of these materials.

Dated: February 2, 1999.

Michael B. Cook,

Director, Office of Wastewater Management.

[FR Doc. 99–2990 Filed 2–5–99; 8:45 am]

BILLING CODE 6560–50–P

ENVIRONMENTAL PROTECTION AGENCY

[FRL–6300–3]

Notice of Gulf of Mexico Program Management Committee Meeting

AGENCY: Environmental Protection Agency (EPA).

ACTION: Notice.

SUMMARY: The Gulf of Mexico Program will hold its Management Committee Meeting.

DATES: The meeting will be held on Tuesday, March 2 and Wednesday, March 3, 1999.

ADDRESSES: The meeting will be held at the Magnolia Plantation Hotel, 16391 Robinson Road, Gulfport, MS. (228) 832–8400.

FOR FURTHER INFORMATION CONTACT: James D. Giattina, Director, Gulf of Mexico Program Office, Building 1103, Room 202, Stennis Space Center, MS 39529–6000 at (228) 688–1172.

SUPPLEMENTARY INFORMATION: The meeting is from 1:00 p.m. until 5:00 p.m. on March 2 and from 8 a.m. until 12:15 p.m. on March 3. Agenda items will include: Report on Coastal Sewage Initiative, Nutrient Enrichment Focus Team Progress Discussion, Update on Gulf Hypoxia, Report on Communications Committee, Nonindigenous Species Regional Panel Discussion, Coastal Wetlands and Submerged Aquatic Vegetation Baseline Characterization and Overview of Draft Gulf Coastal Monitoring Strategy and Gulf Research Needs Assessment.

The meeting is open to the public.

James D. Giattina,

Director, Gulf of Mexico Program Office.

[FR Doc. 99–2992 Filed 2–5–99; 8:45 am]

BILLING CODE 6560–50–P

ENVIRONMENTAL PROTECTION AGENCY

[OPPTS–00263; FRL–6061–6]

Round Table Discussion of the Upcoming Lead Renovation and Remodeling Rulemaking; Notice of Public Meeting

AGENCY: Environmental Protection Agency (EPA).

ACTION: Notice.

SUMMARY: EPA will hold a round table discussion meeting on the forthcoming rulemaking under section 402(c)(3) of the Toxic Substances Control Act (TSCA). Section 402(c)(3) directs the Agency to revise the regulations, codified at 40 CFR part 745, subpart L ''Lead-Based Paint Activities,'' to apply to renovation or remodeling activities that create lead-based paint hazards in target housing. The purpose of this discussion is to provide a forum where interested parties can contribute information and give individual perspectives on specific policy questions related to the forthcoming rulemaking. Agency staff may also ask participants to give their individual reactions to specific proposals and questions.

DATES: The meeting will be held on March 8, 1999, from 8 a.m. to 5 p.m. Written and electronic comments must be submitted on or before April 16, 1999.

ADDRESSES: The meeting will be held at: The Doubletree Hotel, 300 Army Navy Drive, Arlington, VA.

All comments, identified by docket control number ''OPPTS–00263,'' should be sent in triplicate to: OPPT Document Control Officer (7407), Office of Pollution Prevention and Toxics, Environmental Protection Agency, 401 M St., SW., Rm. G–099, East Tower, Washington, DC 20460.

Comments and data may also be submitted electronically to: oppt.ncic@.epa.gov. Follow the instructions under Unit III. of this document. No Confidential Business Information (CBI) should be submitted through e-mail.

All comments which contain information claimed as CBI must be clearly marked as such. Three sanitized copies of any comments containing information claimed as CBI must also be submitted and will be placed in the public record for this action. Persons submitting information on any portion of which they believe is entitled to treatment as CBI by EPA must assert a business confidentiality claim in accordance with 40 CFR 2.203(b) for each such portion. This claim must be made at the time that the information is submitted to EPA. If a submitter does not assert a confidentiality claim at the time of submission, EPA will consider this as a waiver of any confidentiality claim and the information may be made available to the public by EPA without further notice to the submitter.

FOR FURTHER INFORMATION CONTACT: For general information, please contact: Mike Wilson, National Program Chemicals Division (7404), Office of Pollution Prevention and Toxics, Environmental Protection Agency, 401 M St., SW., Washington, DC 20460, Telephone: 202–260–4664, e-mail: wilson.mike@epa.gov.

To register to attend the meeting, call the National Lead Information Center at 1–800–424–LEAD.

SUPPLEMENTARY INFORMATION:

I. Background

The Residential Lead-Based Paint Hazard Reduction Act of 1992 (Title X) amended TSCA by adding a new Title IV. Several sections of Title X direct EPA to promulgate regulations to fulfill the purposes of Title X. These include TSCA section 402, Lead-Based Paint Activities Training and Certification, which directs EPA to promulgate regulations to govern the training and certification of individuals engaged in lead-based paint activities, the accreditation of training programs, and to establish standards for conducting lead-based paint activities. Section 404 of TSCA requires that EPA establish procedures for States seeking to establish their own lead-based paint activities programs. On August 29, 1996 (61 FR 45778) (FRL–5389–9), EPA promulgated final rules that implemented sections 402 and 404 of TSCA titled ''Lead; Requirements for Lead-Based Paint Activities in Target Housing and Child-Occupied Facilities.'' These rules are codified at 40 CFR part 745, subpart L. Section 402(c)(3) of TSCA directs the Agency to revise these regulations so they apply to renovation or remodeling activities which create lead-based paint hazards in target housing.

II. Round Table Discussion

The purpose of the meeting being announced today is to obtain individual input and comment on the regulatory options for modification of existing lead-based paint activities regulations. The existing regulations are codified at 40 CFR part 745, subpart L ''Lead-Based Paint Activities.''

The round table discussion will examine the following issues: applicability, accreditation of training providers, certification of individuals, and work practice standards (setup, occupant protection, clean-up, clearance, and restricted practices). This meeting is open to the public. For registration information please contact the National Lead Information Center at 1–800–424–LEAD.

Individuals wishing to provide comments to EPA, but who cannot attend the round table discussion may submit written or electronic comments to EPA at the address listed in the ''ADDRESSES'' unit of this notice. In order to be included in the synopsis of comments, written and electronic comments must be received by close of business on April 16, 1999.

III. Public Docket and Electronic Submissions

A record has been established for this action under docket control number ''OPPTS–00263'' (including comments submitted electronically as described below). A public version of this record, including printed, paper versions of the electronic comments, which does not include any information claimed as CBI, is available for inspection from noon to

4 p.m., Monday through Friday, excluding legal holidays. The public record is located in the TSCA Non-confidential Information Center, Rm. NE–B607, 401 M St., SW., Washington, DC 20460.

Electronic comments can be sent directly to EPA at:

oppt.ncic@epa.gov

Electronic comments must be submitted as an ASCII file avoiding the use of special characters and any form of encryption.

The official record for this action as well as the public version, as described above will be kept in paper form. Accordingly, EPA will transfer all comments received electronically into printed, paper form as they are received and will place the paper copies in the official record which will also include all comments submitted directly in writing. The official record is the paper record maintained at the address in ADDRESSES at the beginning of this document.

List of Subjects

Environmental protection and Lead.

Dated: February 2, 1999.

William H. Sanders III,

Director, Office of Pollution Prevention and Toxics.

[FR Doc. 99–2986 Filed 2–5–99; 8:45 am]

BILLING CODE 6560–50–F

ENVIRONMENTAL PROTECTION AGENCY

[OPPTS–400139; FRL–6061–3]

Emergency Planning and Community Right-to-Know/Toxic Release Inventory Training Workshop Schedules for Section 313 Reporting Requirements

AGENCY: Environmental Protection Agency (EPA).

ACTION: Notice.

SUMMARY: EPA will conduct EPCRA/TRI training workshops across the country during the spring of 1999. These workshops are intended to assist persons preparing their annual reports on release and other waste management activities as required under sections 313 of the Emergency Planning and Community Right-to-Know Act of 1986 (EPCRA) and section 6607 of the Pollution Prevention Act of 1990 (PPA). These reports must be submitted to EPA and designated state officials on or before July 1, 1999.

FOR FURTHER INFORMATION CONTACT: Michael Hart, (202) 260–1576, e-mail hart.michael@epa.gov, for specific information on this notice, or to register for training, Tascon, Inc., (301) 315–9000 ext. 505, fax: (301) 738–9786, or e-mail: epcra@tascon.com.

SUPPLEMENTARY INFORMATION:

I. General Information

A. Does this Notice Apply to Me?

You may find this notice applicable if you manufacture, process, or otherwise use any EPCRA section 313 listed toxic chemical. Potentially applicable categories and entities may include, but are not limited to:

Category	Examples of regulated entities
Industry; facilities that manufacture, process, or otherwise use certain chemicals	Metal mining, Coal mining, Manufacturing, Electricity generating facilities, Hazardous waste treatment/TSDF, Chemicals and allied products-wholesale, Petroleum bulk plants and terminals, and Solvent recovery services
Federal Government	Federal facilities

This table is not intended to be exhaustive, but rather provides a guide for readers regarding entities likely to find this notice of training course offerings applicable. Other types of entities not listed in the table may also find this notice applicable. To determine whether your facility could find this notice applicable, you should carefully examine the applicability criteria in part 372, subpart B of Title 40 of the Code of Federal Regulations. If you have questions regarding the applicability of this action to a particular entity, consult the person listed in the preceding ''FOR FURTHER INFORMATION CONTACT'' section.

You may be able to take advantage of the training courses if:

- Your facility is a facility covered under section 313 of the Emergency Planning and Community Right-to-Know Act (EPCRA)
- Your facility is a Federal facility that maufactures, processes, or otherwise uses section 313 listed toxic chemicals
- You prepare annual release and other waste management activity reports (i.e., Form R or Form A)
- You are a consultant who assists in the preparation of these reports; or you would like information on recent changes to EPCRA/TRI regulations

EPA conducts annual training courses to assist you with your reporting requirements under section 313 of EPCRA and section 6607 of the Pollution Prevention Act of 1990 (PPA) or Executive Order 12856 (for Federal facilities). You must submit your annual release and other waste management activity reports (i.e., Form R or Form A) if your facility meets the descriptions for the following Standard Industrial Classification (SIC) codes and qualifiers:

- Metal Mining (SIC Code 10, except 1011, 1081, and 1094)
- Coal Mining (SIC Code 12, except 1241)
- Manufacturing (SIC Codes 20–39)
- Electricity Generating Facilities (SIC Codes 4911, 4931, and 4939--limited to facilities that combust coal and/or oil for the purpose of generating electricity for distribution in commerce)
- Hazardous Waste Treatment/TSDF (SIC Code 4953--limited to facilities regulated under RCRA subtitle C, 42 U.S.C. section 6921 *et seq.*)
- Chemicals and Allied Products (SIC Code 5169)
- Petroleum Bulk Plants and Terminals (SIC Code 5171)
- Solvent Recovery (SIC Code 7389--limited to facilities primarily engaged in solvents recovery services on a contract or fee basis)
- Federal Facilities (by Executive Order 12856)

B. What Is Presented At These Training Courses?

The training courses present reporting requirements of EPCRA section 313 and PPA section 6607. A variety of hands-on exercises using the reporting forms (i.e., Form R or Form A) along with supporting materials will be used to help you understand any reporting obligations you might have under EPCRA section 313. The training courses are scheduled in the spring so that you can prepare and submit your report(s) for the 1998 Reporting Year on or before July 1, 1999.

C. How Much Time Is Required for the Training?

The full training course runs 3 days. The first day and a half is devoted to a general discussion of EPCRA section 313 reporting requirements with exercises used to reinforce key concepts. Beginning the afternoon of the second day, the half-day industry-specific modules begin. Assuming sufficient interest in all five industry-specific modules, the first two modules will begin concurrently on the afternoon of the second day, while the next additional and different modules will be held concurrently on the morning of the

third day, and the fifth and final module will be held on the afternoon of the third day. The five different modules are:

- Metal mining facilities and coal mining facilities (combination module)
- Electricity generating facilities
- TSD/solvent recovery facilities (combination module)
- Petroleum bulk plants and terminals facilities and chemical and allied products facilities (combination module)
- Manufacturing facilities

Scheduling for modules will be based on participant interest with the two most popular modules beginning during the afternoon of the second day. Again, assuming sufficient interest in all five modules, the third and fourth most popular modules will be offered during the morning of the third day and the last module will be held in the afternoon. You should be aware that the schedule for modules will be determined during the first day of training and that there may be a gap between the general 1½–day course and your preferred industry-specific module. Every effort will be taken during the scheduling process to accommodate as many participants as possible within the shortest time frame. EPA workshops also will include industry-specific training to provide information to further assist facilities with the reporting obligations they may have for the 1998 reporting year with reports due on or before July 1, 1999. EPA intends to present all five modules at each 3–day training course for the newly added industries, but this may be modified for each 3–day training course based on sufficient interest. Table 1 (see section D. of this unit) contains a list of the 3–day courses currently scheduled.

In addition, EPA is conducting abbreviated training courses. These courses are ½, 1, or 2 days in duration and, in some cases, are focused for a particular industry sector(s). Table 2 (see section D. of this unit) contains a list of these courses currently scheduled.

D. When Are These Training Courses Offered and How Do I Register?

The schedules for training courses are provided below in Tables 1 and 2 below. You should note, however, that changes to the schedules may occur without further notice so it is important to check your registration materials and confirmation notice. Also, you may access current training course schedule information via the TRI Home Page (http://www.epa.gov/opptintr/tri).

You should direct your requests for training course registration materials, including schedules of dates and locations, to Tascon, Inc., (301) 315–9000 ext. 505, fax: (301) 738–9786, or e-mail: epcra@tascon.com.

Table 1.—Full 3–Day Workshop Schedule

Date	Location	Intended Audience
February 23–25	Oklahoma City, OK	All industries
March 1–3	Minneapolis, MN	All industries
March 16–18	New York, NY	All industries
March 23–25	Washington, DC	All industries
March 23–25	Columbia, SC	All industries
March 30–April 1	Ann Arbor, MI	All industries
April 6–8	Boston, MA	All industries
April 6–8	Nashville, TN	All industries
April 13–15	Edison, NJ	All industries
April 13–15	Kansas City, MO	All industries
April 20–22	Dallas, TX	All industries
May 11–13	Philadelphia, PA	All industries
May 11–13	Denver, CO	All industries
May 17–19	Portland, OR	All industries
May 24–26	San Francisco, CA	All industries

Table 2.— Abbreviated or Focused (½–, 1–, and 2–Day) Workshop Schedule

Date	Region	Location	Intended Audience
March 9	8	Salt Lake City, UT	Mfg. only
March 10	8	Salt Lake City, UT	New industries only
March 29–30	9	Los Angeles, CA	Day 1: All industries Day 2: Mfg., EGF, TSD only
March 31–April 1	9	San Diego, CA	Day 1: All industries Day 2: Mfg., EGF, TSD only
April 1–2	9	Reno, NV	All industries
April 6 (½ day)	3	Baltimore, MD	All industries
April 8 (½ day)	3	Hagerstown, MD	All industries
April 8–9	2	Puerto Rico, PR	All industries
April 16	2	Atlantic City, NJ	All industries
April 20 (½ day)	3	Richmond, VA	All industries
April 20	7	Overland Park, KS	All industries*
April 22 (½ day)	3	Roanoke, VA	All industries
April 22	7	St. Louis, MO	All industries*
April 26–27	4	Atlanta, GA	Mfg. petro/chem only
April 27	5	Michigan City, IN	All industries
April 27	7	Des Moines, IA	All industries
April 28–29	4	Atlanta, GA	New industries only
April 29	5	Columbus, OH	All industries
April 29	7	Lincoln, NE	All industries*
May 17	9	Fresno, CA	All industries
May 18	5	Bloomington, MN	All industries
May 18–19	9	Phoenix, AZ	Mining and mfg. only*

Table 2.— Abbreviated or Focused (½–, 1–, and 2–Day) Workshop Schedule—Continued

Date	Region	Location	Intended Audience
May 19 (½ day)	3	Reading, PA	All industries
May 20	9	Reno, NV	Mining only
May 20	5	Brookfield, WI	All industries
May 21	9	Sacramento, CA	All industries
May 20–21	10	Eugene, OR	All industries
May 24–25	9	Las Vegas, NV	All industries
May 24–25	10	Seattle, WA	All industries
May 26	10	Boise, ID	All industries
May 27	5	Champaign, IL	All industries
May 27–28	9	Carson City, NV	All industries
June 9	5	Detroit, MI	All industries

Notes:
* = Registration fee will be required for these workshops
All Industries = Manufacturing and New Industries
EGF = Electricity Generating Facilities
Mfg. = Manufacturing (SIC Codes 20-39)
Mining only = Metal Mining and Coal Mining
New Industries only = Metal Mining (SIC Code 10, except 1011, 1081, and 1094), Coal Mining (12, except 1241), Electricity Generating Facilities (4911, 4931, and 4939--limited to facilities that combust coal and/or oil for the purpose of generating electricity for distribution in commerce), TSD (4953, limited to facilities regulated under RCRA subtitle C, 42 U.S.C. section 6921 *et seq.*), Chemical and Allied Products (5169), Petroleum Bulk Plants and Terminals (5171), and Solvent Recovery (7389--limited to facilities primarily engaged in solvents recovery services on a contract or fee basis)
Petro/Chem = Petroleum Bulk Plants and Terminals Chemical and Allied Products facilities
TSD = Treatment, Storage, and Disposal facilities

To register for the full 3-day training courses (Table 1), you must send a completed registration application, including your name, your company's name and SIC code, your postal address, your telephone number, your fax number, your e-mail address, and your preferred training location(s) to Tascon, Inc. via telephone ((301) 315–9000 extension 505), fax ((301) 738–9783), or e-mail (epcra@tascon.com). Requests for applications for abbreviated or focused training courses should be directed to Tascon, Inc. unless the training course is listed below with a separate workshop contact (see Table 3 below).

Table 3.—Workshop Contacts

Date	Location	Audience Workshop	Contact
April 1–2	Reno, NV	All industries	Scott Alquist Truckee Meadows Community College alquist@tmcc.edu or 775-829-9000
April 20	Overland Park, KS	All industries	Judy Luce Dynamac luce.judy@epamail.epa.gov (913) 551-7680 or (913) 551-7680 (fax)
April 22	St. Louis, MO	All industries	Do.
April 27	Des Moines, IA	All industries	Do.
April 29	Lincoln, NE	All industries	Do.

You will receive an acknowledgment of application receipt via fax or e-mail. If your application is accepted, a confirmation notice will be sent to you that will contain important information regarding date, location, directions, etc. If the training course you applied for is filled or canceled, alternate training courses will be suggested. Since space is limited, you are encouraged to submit your registration application as early as possible, but not less than 1 week before your preferred training course.

E. How Much Will the Training Course Cost?

There is no registration fee for the full 3–day training courses listed in Table 1; there may be a registration fee for the Table 2 workshops. You may access information regarding registration fees via the TRI Home Page at http://www.epa.gov/opptintr/tri or by contacting the respective Regional Workshop Contact listed in Table 3. If there is insufficient interest at any of the training course locations, those courses may be canceled. The Agency bears no responsibility for your decision to purchase non-refundable transportation tickets or accommodation reservations.

List of Subjects

Environmental protection, Community right-to-know, Reporting and recordkeeping requirements, Toxics Release Inventory.

Dated: January 28, 1999.

William H. Sanders III,

Director, Office of Pollution Prevention and Toxics.

[FR Doc. 99–2985 Filed 2–5–99; 8:45 am]

BILLING CODE 6560–50–F

ENVIRONMENTAL PROTECTION AGENCY

[FRL–6231–5a]

Caldwell Systems, Inc., Superfund Site; Notice of Proposed De Minimis Settlements

AGENCY: Environmental Protection Agency.

ACTION: Notice of proposed de minimis settlements.

SUMMARY: Under section 122(g)(4) of the Comprehensive Environmental Response, Compensation and Liability Act (CERCLA), the Environmental Protection Agency (EPA) has offered approximately 500 de minimis parties at the Caldwell Systems, Inc. Site located in Lenoir, North Carolina, an opportunity to enter into an Administrative Order on Consent (AOC) to settle claims for past and future response costs at the Site. The original settlement offer contained a cost matrix with a weight assigned to each party along with a payment amount for each party. The original cost matrix is no longer accurate because of volumetric challenges. These challenges were reviewed and it was determined that the volumes attributed to some of these parties were incorrect. These parties received letters indicating their new weight and payment amounts, if any, and these letters are attached to the original cost matrix. Additionally, the State of North Carolina has a separate AOC. The following list of 359 parties have returned signature pages accepting EPA's settlement offer:

A.E.P. Industries, Inc., A.G. Industries, AVX, Acme Printing, Acme Transformer, Aeroquip, Alcatel Telecommunications Cable aka Alcatel/Celwave, Alexvale Furniture Company, Allied Colloids, Inc., Allied Towing Corporation, Amerada Hess Corporation, American Can Company, American Cyanamid fka Cyanamid c/o Margaret Tribble, American National Can Company fka Stroh Container Division, American Roller Bearing of North Carolina, Ametek, Inc-Lamb Electric Division, Amoco Oil, Amoco Oil Co. aka Southeast Terminals, Andrex Industries, Inc., Arrow Automotive Industries, Asplundh Manufacturing, Aus-Ben Industries, Austex Corp. fka Diamond G. Printed Sportswear, Auto Alignment, Inc., B&W Metal Fabrication, BP Oil, Inc.-Gulf Products Division, Babcock & Wilcox, Baker Furniture, Baker Furniture Company, Balcrank Products, Ball Glass Container Corporation, Bassett Furniture Industries, Inc., aka Bassett Furniture aka Bassett Upholstery, Belding Corticelli Thread Company, Betz Labs, Binswanger Southern, Black & Decker, Blackman-Uhler Chemical, Borden Chemical Company, Bowater, Bowman Gray School of Medicine, Bradington-Young, Inc., Bristol Myers Products, Burlington Industries, CM Furniture, Inc., Cabinet Makers, Inc., Capitol Ford, Inc., Cardinal Steel Drum, Caribbean Gulf Refining Company, Carolina Enterprises, Carolina Mirror Corporation, Cellu Products aka Sealed Air Corp., Champion Parts Rebuilders, Inc., Champion Products, Inc., S.E., Channel Master, Charlotte Orthopedic Hospital, Chemical Coatings Corporation, Chemical Leaman Tank Lines, Chemprene, Inc. aka Hercules Products, Cheaspeake Finished Metals, Chevron USA, Ciba-Geigy Corporation, Citgo Petroleum, City Chevrolet, City Motors, City of Lincolnton, City of Raleigh, City of Raleigh-Transportation Dept., Clark Hurth Components aka Clark Equipment Company, Clayton Marcus Company, Coats North America fka American Thread, Collins & Aikman, Comm Scope Company, Inc., Conoco, Inc., Controls Corporation aka Fasco Industries, Converters Ink Company, Conwed Fibers aka Conwed Corporation, Cooper Industries Energy Services aka Cooper Energy Service, Cooper Lighting aka Metalux Lighting, Cornell Dublier Electronics, Corning, Inc. fka Corning Glass Works, Council Business Furniture, Inc., Crain Industries aka Crain Carolina, Crawford Door Company, Crown Central Petroleum, Crown Cork & Seal Co., Cryovac Division, Curtiss-Wright Flight Systems, Dale Electronics, Damon Clinical Laboratories-WCBS, Dana Corporation, Dar-Ran Furniture Industries, Data General, Dexter Packaging Products aka Dexter Corp.-Midland Division, DuPont Spruance Fibers Plant, Duff Norton Company, Duracell, Durham County General Hospital, EZ Painter Corporation aka EZ Painter (A Newell Company), E-Z Go Textron, Eagle-Pontiac-GMC aka Royal Pontiac-GMC-Isuzu, East Carolina Heat Treat aka East Carolina Metal Treating, Eaton Corporation, Eaton Cutler Hammer, Ecusta Corporation, Emerson Electric Company, Emhart Packaging Group, Empak, Inc., Empire Furniture Co., Encas Labs, Environmental Enterprises, Inc., Environmental Wastewater Services, Ericsson Radio Systems, Inc. fka Anaconda Wire and Cable, Esstar Corporation aka Amstar Corporation, Ethan Allen, Excello Corporation-Micromatic Operation, Exide Electronics, F.M.C. Corporation, Fairfield Chair Company, Farval aka Farval Cleveland Gear, Federal Paper Board, Fermenta Animal Health, Fiber Controls, Fieldcrest Mills, Fina Oil and Chemical Company, Firetrol, Inc., First National Bank, Flint Ink aka Flin Ink, Forest City Tool, GSX Services, Inc., Gage Carolina Metals, George A. Goulston Company, Inc., Georgia Bonded Fibers, Gilbarco, Inc., Glaxo, Inc., Glenoit Mills, Inc., Glidden Co. aka Glidden Coatings & Resins, Goodman Conveyor Company, Inc., Goodyear Tire & Rubber Co., Great Lakes Chemical Corp., Great Lakes Research Corp., Green Ford Isuzu, Greenwood Mills, Greet Laboratories, Inc., Grinnell Sales & Supplies aka I.T.T. Grinnell, Gulf State Paper Company, HBD Industries aka Carolina Rubber Hose Co., Halliston Mills, Inc., Hanes Knitwear, Hanes Printables, Inc., Harley Corporation, Hastings Company, Hekman Furniture Company, Henry-Link Corporation, Hickory Springs, Hickory Vinyl, Highway Transport, Inc., Holtrachem, Inc., Hooker Furniture Co., Hunt Mfg., Hydro-Agra North America, Inc. aka Transnitro, Inc., Ingersoll Dresser Pump Company aka Dresser Industrial-Worthington Pump Division, Ingersoll Rand, Intercraft Industries, International Flavors & Fragrances, International Paper aka Masonite Corporation, Ivac Corporation, J.H. Craver & Sons, Inc., J.P. Stevens & Company, Inc., aka West Point Stevens, James River Dixie Products aka James River Dixie Northern, Jepson Burns Corporation, John Boyle Company, Johnson Controls, Inc. aka Hoover Universal, Inc., Jordan Oil Company aka Union Oil Company, Kendrick Paint & Body, Kewaunee Scientific, Klingspor Abrasives, Koch Refining aka Koch Fuel, Kohler Company, Kollmorgen Corp.-Industrial Drive Division, Koopers Company, Kramer Chemicals, Inc. aka Kramer Environmental, Lackawanna Leather Co., Lancaster Synthesis aka Fairfield Chemical Company, Inc., Leathercraft, Lenoir Mirror Company, Liggett Group, Inc. aka Liggett Meyers Tobacco Co., Liquid Air Company aka Air Liquide America, Lockheed Missiles & Space Co., Lyon Shaw, Inc., M.A. Bruder & Sons, Inc., M.P.I. Labels of Charlotte, Maintenance Supply Company, Inc. aka Maintenance Supply Service Corp., Mallinckrodt, Inc., Manville Packaging Division, Marsh Furniture Company, Mayes Brothers Tool Mfg. Co., Merck Sharpe & Dohme, Metro Machine Company, Microm Corp., Midland Brake, Inc., Miller Brewing Company, Miller Desk Company, Inc., Miller Oil Company, Milliken Chemicals Corporation, Mine Safety Appliance Company, Mitsubishi Semiconductor of America, Modern Chevrolet Company, Monarch Color Corporation, Morganite, Inc., Morganton Chair, Mr. Frank Bell, Mueller Company, NCNB, NI-Industries, Nap Consumer Electronics, Neptco, Inc., New Jersey Department of Environmental Protection-Division of Waste Management, News & Observer, Niemand Industries, Inc., North Carolina Department of Corrections, North Carolina Department of Transportation, North East Solvents Reclamation Corp., Northern Telecom, Norton Company, Nova Enterprises aka Nova Kitchen & Bath, OH Materials, Occidental Chemical, Ohio Electric Motors, Onan Power Electronics-ADC Magnetics, Onedia Molded Plactics Corporation, Overnite Transportation, PPG Industries, Inc., Pac-Fab, Inc., Package Prodcuts Specialty aka Package Products Co., Pampco, Inc., Paramount Packaging, Parker Hannifin Corporation, Pelton and Crane, Penn Engineering, Pennsylvania House Furniture, Phillips Petroleum Company, Piedmont Airlines, Plastic Packaging Company, Pneumafil Corp., Polymer Industries, Primary Oil & Energy Corp., Printpack, Inc., Prodelin, Prodelin, Inc. aka M/A Com Prodelin, Inc., Progressive Furniture Co., Purolator Products Co., RR Donnelly and Sons, R.J. Reynolds Tobacco Company, Radiator Specialty, Raleigh Community Hospital, Ranbar Technology, Inc. aka BBT, Inc. c/o Ball Chemical Company, Raychem, Rea Magnet Wire, Reliance Electric aka Reliance Universal, Rental Uniform Service, Rex Rosenlaw, Reynolds Metal Company, Rheem

Manufacturing Company, Rice's Toyota, Robert Bosch Power Tool Corp., Rospatch, SAFT Americas, Inc., Sam Moore Furniture, Sandoz Chemicals aka Sodyeco, Inc., Sandvik, Inc., Schlage Lock, Schwitzer Turbocharger, Sealed Air Corporation, Seaman Corporation-shelter Rite, Shell Oil Company, Sherwin Williams Co., Shuford Mills, Inc., Sicpa fka Strahan Ink Pacquer Co., Siemans-Allis, Simpson Industries, South Carolina Department of Corrections, Southchem, Inc., Sherrill Furniture Company, Southeastern Transformer Co., Inc., Southern Facilities, Southern Furnitire, Southern Resin, Spindale Mills Inc. aka New Cherokee, Sprague Electric Co., Square D Company, St. Regis Paper Company, Stabilus aka Gas Spring Company, Stanadyne-Washington, Stanadyne-Sanford, Standard Products Co., Standex, Stanley Furniture aka Raleigh Road Furniture, Star Enterprises, State Industries, Inc.-Water Systems, Stauffer Chemical Company-Furnace Plant, Stockhausen, Stroh Brewing Company, Style Upholstery, Sulzer Ruti, Inc., Sun Chemical Corporation aka Sun Chemical Corporation aka Gen. Printing Ink, Sun Refining & Marketing Company, Superior Cable Company, Superpac, Inc., T&S Brass & Bronze, T.I. Industries-Indiana Marketing, Technibilt Division of Whittaker Co., Technographics Decotone U.S., Inc., Ted Nelson Company, Teledyne-Lewisburg, Tenneco Oil Company, Terrell Machine Company, Texaco, Texas City Refining, Thayer Coggins, Inc., Therm-o-disc, Inc., Thomasville Furniture, Thonet Industries, Tidewater Regional Transit, Tietex Corporation, Timken Company, Tracor Aerospace, Inc., Transcontinental Gas Pipeline, Triad Terminal Oil Company, Trion, Inc., Tritac, Union Oil Company-Southeast Terminals, Unitex Chemical Company, Unocal, VME Americas, Inc., Varco Pruden, Vaughan Furniture Company, Vaughn Bassett-Elkin Division, Vermont American Corporation, Vic Bailey, Virginia Department of Highways & Transportation, W.P. Hickman Company, Wake Medical Center, Walter Kidde Company, Warlick Paint Company, Washington Post, Waster Resources of Tennessee, Wayne Dalton Corporation, Weber USA, Wellington Hall, Ltd., Wells Aluminum S.E., Inc., West Vaco-Chemical Division, St. John's Department, Westclox, Western Branch Diesel, Inc., Western Publishing Co., Weyerhaeuser, Whittaker Corporation, William M. Wilson's Sons, Inc., Winston Container Co., and Yieldhouse.

EPA will consider public comments on the proposed settlements for thirty days. EPA may withdraw from or modify the proposed settlements should such comments disclose facts or considerations which indicate the proposed settlements are inappropriate, improper, or inadequate. Copies of the proposed settlements are available from: Ms. Paula V. Batchelor, U.S. Environmental Protection Agency, Region IV, Program Services Branch, Waste Management Division, 61 Forsyth Street, S.W., Atlanta, Georgia 30303, (404) 562–8887.

Written comments may be submitted to Ms. Annette Hill at the above address within thirty (30) days of the date of publication.

Dated: January 22, 1999.

Franklin E. Hill,

Chief, Programs Services Branch, Waste Management Division.

[FR Doc. 99–2987 Filed 2–5–99; 8:45 am]

BILLING CODE 6560–50–M

ENVIRONMENTAL PROTECTION AGENCY

[FRL–6231–5]

Clean Water Act Class II: Proposed Administrative Penalty Assessment and Opportunity To Comment Regarding the City of Homestead Village, MO

AGENCY: Environmental Protection Agency (''EPA'').

ACTION: Notice of proposed administrative penalty assessment and opportunity to comment regarding the city of Homestead Village, Missouri.

SUMMARY: EPA is providing notice of opportunity to comment on the proposed assessment of an administrative penalty against the city of Homestead Village, Missouri. Under 33 U.S.C. 1319(g), EPA is authorized to issue orders assessing civil penalties for various violations of the Act. EPA may issue such orders after filing a Complaint commencing either a Class I or Class II penalty proceeding. EPA provides public notice of the proposed assessment pursuant to 33 U.S.C. 1319(g).

Class II proceedings are conducted under EPA's Consolidated Rules of Practice Governing the Administrative Assessment of Civil Penalties and the Revocation or Suspension of Permits, 40 CFR part 22. The procedures by which the public may submit written comments on a proposed Class II order or participate in a Class II proceeding, and the procedures by which a respondent may request a hearing, are set forth in the Consolidated Rules. The deadline for submitting public comment on a proposed Class II order is thirty (30) days after issuance of public notice.

On September 30, 1998, EPA commenced the following Class II proceeding for the assessment of penalties by filing with the Regional Hearing Clerk, U.S. Environmental Protection Agency, Region VII, 726 Minnesota Avenue, Kansas City, Kansas 66101, (913) 551–7630, the following complaint: In the Matter of the city of Homestead Village, Missouri; EPA Docket No. VII–98–W–0044.

The Complaint proposes a penalty of One Hundred Thirty Thousand Dollars ($130,000) for the discharge of pollutants to an unnamed tributary of Fishing River in violation of the facility's National Pollutant Discharge Elimination System (NPDES) permit and sections 301 and 402 of the Clean Water Act.

FOR FURTHER INFORMATION CONTACT: Persons wishing to receive a copy of EPA's Consolidated Rules, review the Complaint or other documents filed in this proceeding, comment upon the proposed penalty assessment, or otherwise participate in the proceeding should contact the Regional Hearing Clerk identified above.

The administrative record for the proceeding is located in the EPA Regional Office at the address stated above, and the file will be open for public inspection during normal business hours. All information submitted by the city of Homestead Village is available as part of the administrative record subject to provisions of law restricting public disclosure of confidential information. In order to provide opportunity for public comment, EPA will issue no final order assessing a penalty in this proceeding prior to thirty (30) days from the date of this document.

Dated: January 26, 1999.

Dennis Grams,

Regional Administrator, Region 7.

[FR Doc. 99–2788 Filed 2–5–99; 8:45 am]

BILLING CODE 6560–50–M

FEDERAL COMMUNICATIONS COMMISSION

Public Information Collections Approved by Office of Management and Budget

January 28, 1999.

The Federal Communications Commission (FCC) has received Office of Management and Budget (OMB) approval for the following public information collections pursuant to the Paperwork Reduction Act of 1995, Public Law 104–13. An agency may not conduct or sponsor and a person is not required to respond to a collection of information unless it displays a currently valid control number. For further information contact Shoko B. Hair, Federal Communications Commission, (202) 418–1379.

Federal Communications Commission

OMB Control No.: 3060–0774.
Expiration Date: 01/31/2002.

Title: Federal-State Joint Board on Universal Service—CC Docket No. 96–45, 47 CFR 36.611–36.612 and 47 CFR Part 54

Form No.: N/A.

Respondents: Business or other for-profit, individuals or households; not-for-profit institutions; state, local or tribal government.

Estimated Annual Burden: 5,565,451 respondents; .32 hours per response (avg.); 1,785,570 total annual burden hours for all collections.

Estimated Annual Reporting and Recordkeeping Cost Burden: $0.

Frequency of Response: On occasion; annually; one-time; every five years; recordkeeping requirements; third party disclosures.

Description: Congress directed the Commission to implement a new set of universal service support mechanisms that are explicit and sufficient to advance the universal service principles enumerated in Section 254 of the Telecommunications Act of 1996 and such other principles as the Commission believes are necessary and appropriate for the protection of the public interest, convenience and necessity, and are consistent with the Act. In the various Orders issued in CC Docket No. 96–45, the Commission adopted rules that are designed to implement the universal service provisions of section 254. Specifically, the Orders address: (1) Universal service principles; (2) services eligible for support; (3) affordability; (4) carriers eligible for universal service support; (5) support mechanisms for rural, insular, and high cost areas; (6) support for low-income consumers; (7) support for schools, libraries, and health care providers; (8) interstate subscriber for schools, libraries, and health care providers; (8) interstate subscriber line charge and common line cost recovery; and (9) administration of support mechanisms. The reporting and recordkeeping requirements contained in CC Docket No. 96–45 are designed to implement Section 254. The requirements are necessary to ensure the integrity of the program. All the collections are necessary to implement the congressional mandate for universal service. The reporting and recordkeeping requirements are necessary to verify that the carriers and other respondents are eligible to receive universal service support. Obligation to respond: Mandatory.

Rule section/title (47 CFR)	Hours per response	Total annual burden
a. 36.611(a) & 36.612—Submission and Updating information to NECA	20	26,800
b. 54.101(c)—Demonstration of exceptional circumstances for toll-limitation grace period	50	100
c. 54.201(a)(2)—Submission of eligibility criteria	4	400
d. 54.201(b)(c)—Submission of eligibility criteria	1	3,400
e. 54.201(d)(2)—Advertisement of services & charges	50	65,000
f. 54.205(a)—Advance notice of relinquishment of universal service	.5	50
g. 54.207(c)(1)—Submission of proposal for redefining a rural service area	125	6,250
h. 54.307(b)—Reporting of expenses & number of lines served.	2.5 (avg.)	4,100
i. 54.401(b)(1)–(2)—Submission of disconnection waiver request	2	100
j. 54.401(d)—Lifeline certification to the Administrator	1	1,300
k. 54.407(c)—Lifeline recordkeeping	80	104,000
l. 54.409(a)–(b)—Consumer qualification for Lifeline	5 min.	440,000
m. 54.409(b)—Consumer notification of Lifeline discontinuance	5 min.	44,000
n. 54.413(b)—Link Up recordkeeping	80	104,000
o. 54.501(d)(4) & 54.516—Schools & Libraries recordkeeping	41(avg.)	372,000
p. 54.504(b)–(c), 54.507(d) & 54.509(a)—Description of services requested & certification	2	100,000
q. 54.519—State telecommunications networks	4	200
r. 54.601(b)(4) & 54.609(b)—Calculating support for health care providers	100	340,000
s. 54.601(b)(3) & 54.619—Shared facility record-keeping	21 (avg.)	160,000
t. 54.607(b)(1)–(2)—Submission of proposed rural rate	3	150
u. 54.603(b)(1), 54.615(c)–(d) & 54.623(d)—Description of services requested and certification	1	11,000
v. 54.619(d)—Submission of rural health care report	40	40
w. 54.701(f)(1) & (f)(2)—Submission of annual report & CAM	40	40
x. 54.701(g)—Submission of quarterly report	10	40
y. 54.707—Submission of state commission designation	.25	850
z. Obligation to notify underlying carrier	1	1,700
aa. Demonstration of reasonable steps	1	50
Total Annual Burden Hours		1,785,570

All the collections are necessary to implement the congressional mandate for universal service. The reporting and recordkeeping requirements are necessary to verify that the carriers and other respondents are eligible to receive universal service support.

OMB Control No.: 3060–0760.

Expiration Date: 12/31/2001.

Title: Access Charge Reform—CC Docket No. 96–262 (First Report and Order), Second Order on Reconsideration and Memorandum Opinion and Order, and Third Report and Order.

Form No.: N/A.

Respondents: Business or other for-profit.

Estimated Annual Burden: 13–14 respondents; 2–300 hours per response (avg.); 1,796,916 total annual burden hours for all collections.

Estimated Annual Reporting and Recordkeeping Cost Burden: $23,400 ($600 filing fee).

Frequency of Response: On occasion; third party disclosure.

Description: In the First Report and Order, CC Docket No. 96–262, Access Charge Reform and the Second Report on Reconsideration and Memorandum Opinion and Order, the FCC adopts, that, consistent with principles of cost-causation and economic efficiency, nontraffic sensitive (NTS) costs associated with local switching should be recovered on an NTS basis, through flat-rated, per month charges. a. Showings under the Market-Based Approach: as competition develops in the market, the FCC will gradually relax and ultimately remove existing Part 69 Federal access rate structure requirements and Part 61 price caps restrictions on rate level changes.

Regulatory reform will take place in two phases. The first phase of regulatory reform will take place when an incumbent Local Exchange Carrier's (LEC's) network has been opened to competition for interstate access services. The second phase of rate structure reforms will take place when an actual competitive presence has developed in the marketplace. LECs may have to submit certain information to demonstrate that they have met the standards. (No. of respondents: 13; hours per response: 137,986 hours; total annual burden: 1,793,818 hours). b. Cost Study of Interstate Access Service that Remain Subject to Price Cap Regulation: To implement our backstop to market-based access charge reform, we require each incumbent price cap LEC to file a cost study no later than February 8, 2001, demonstrating the cost of providing those interstate access services that remain subject to price cap regulation because they do not face substantial competition. (No. of respondents: 13; hours per response: 8 hours; total annual burden: 104 hours). c. Tariff Filings: The Commission requires the filing of various tariffs. (No. of respondents: 13; hours per response: 58; total annual burden: 754 hours). d. Third-Party disclosure: In the Second Order on Reconsideration, the Commission requires LECs to provide IXCs with customer-specific information about how many and what types of presubscribed interexchange carrier charges (PICCs) they are assessing for each of the IXCs presubscribed customers. (No. of respondents: 14; hours per response: 160 hours; total annual burden: 2240 hours). One of the primary goals of the First Report and Order was to develop a cost-recovery mechanism that permits carriers to recover their costs in a manner that reflects the way in which those costs are incurred. Without access to information that indicates whether the LEC is assessing a primary or nonprimary residential PICC, or about how many local business lines are presubscribed to a particular IXC, the IXCs will be unable to develop rates that accurately reflect the underlying costs. The information required under these orders would be used in determining whether the incumbent LECs should receive the regulatory relief proposed in the Orders. The information collected under the Orders would be submitted by the LECs to the interexchange carriers (IXCs) for use in developing the most cost-efficient rates and rate structures. Obligation to respond: Mandatory.

OMB Control No.: 3060–0519.

Expiration Date: 12/31/2001.

Title: Rules and Regulations Implementing the Telephone Consumer Protection Act of 1991—CC Docket No. 92–60.

Form No.: N/A.

Respondents: Business or other for-profit.

Estimated Annual Burden: 30,000 respondents; 31.2 hours per response (avg.); 936,000 total annual burden hours for all collections.

Estimated Annual Reporting and Recordkeeping Cost Burden: $0.

Frequency of Response: On occasion.

Description: In CC Docket No. 92–60, the FCC implemented final rules pursuant to the requirements of the Telephone Consumer Protection Act of 1991, Public Law 102–243, Dec. 20, 1991 (TCPA) which added Section 227 to the Communications Act of 1934, as amended, to restrict the use of automatic telephone dialing systems, artificial or prerecorded messages, facsimile machines or other devices to send unsolicited advertisements. The rules require that telephone solicitors maintain and use company-specific lists of residential subscribers who request not to receive further telephone calls (company-specific do-not-call lists), thereby affording consumers the choice of which solicitors also are required to have a written policy for maintaining do-not-call lists, and are responsible for informing and training their personnel the existence and use of such lists. The rules require that those making telephone solicitations identify themselves to called parties, and that basis identifying information also be included in telephone facsimile transactions. The Commission believes that these rules are the best means of preventing unwanted telephone solicitations.

OMB Control No.: 3060–0536.

Expiration Date: 01/31/2000.

Title: Rules and Requirements for Telecommunications Relay Services (TRS) Interstate Cost Recovery.

Form No.: FCC Form 431.

Respondents: Business or other for-profit.

Estimated Annual Burden: 5000 respondents; 3.1 hours per response (avg.); 15,593 total annual burden hours for all collections.

Estimated Annual Reporting and Recordkeeping Cost Burden: $0.

Frequency of Response: On occasion; annually; third party disclosure.

Description: Title IV of the Americans with Disabilities Act, Public Law 101–336, Section 401, 104 Stat. 327, 366–69 (codified at 47 U.S.C. Section 225 requires the Federal Communications Commission to ensure that telecommunications relay services are available to persons with hearing and speech disabilities in the United States. Among other things, the Commission is required by 47 U.S.C. 225(d)(3) to enact and oversee a shared-funding mechanism (TRS Fund) for recovering the costs of providing TRS. The Commission's regulations concerning the TRS fund are codified at 47 CFR 64.604(c)(4). Pursuant to these regulations, the National Exchange Carrier Association (NECA) has been appointed Administrator of the TRS Fund. The Commission's rules require all carriers providing interstate telecommunication services to contribute to the TRS Fund on an annual basis. Contributions are the product of the carrier's gross interstate revenues for the previous year and a contribution factor determined annually by the Commission. The collected contributions are used to compensate TRS providers for the costs of providing interstate TRS service. The Commission releases an order each year approving the contribution factor, payment rate, and TRS Fund Worksheet for the following year. Accordingly, on December 2, 1998, the Commission's Common Carrier Bureau, acting under delegated authority, released an order approving the contribution factor for the April 1999 through March 2000 contribution period and the 1999 TRS Fund worksheet (FCC Form 431). All carriers providing interstate telecommunications service must file this worksheet. A public notice will be issued to announce the availability of the 1999 FCC Form 431. (No. of respondents: 5000; hours per response: 2 hours; total annual burden: 10,000 hours). Section 64.604(c)(2) requires that carriers publicize the availability and use of TRS in their service areas. Publications may be made through the carriers' directories, periodic billing inserts, placement of TRS instructions in telephone directories, through directory assistance services, and through incorporation of TTY numbers in telephone directories. (No. of respondents: 5000; hours per response: 1 hour; total annual burden: 5000 hours). c. TRS providers must provide the administrator with true and accurate data to be used to compute payments. According to Section 64.604(c)(4)(iii)(C), the providers must submit the following: total TRS minutes of use, total interstate TRS minutes of use, total TRS operating expenses and total TRS investment in general accordance with 47 CFR Part 32, and other historical or projected information reasonably requested by the administrator for purposes of computing payments and

revenue requirements. (No. of respondents: 13; hours per response: 3 hours; total annual response: 39 hours). d. TRS providers, including providers who are not interexchange carriers, local exchange carriers, or certified state relay providers, must submit reports of interstate TRS minutes of use to the administrator in order to receive payments. TRS providers receiving payments shall file a form prescribed by the administrator. (No. of respondents: 13; hours per response 4; total annual burden: 52 hours). e. Section 64.604(c)(4)(iii)(F) lists TRS providers who are eligible for receiving payments from the TRS Fund. These providers must notify the administrator of their intent to participate in the TRS Fund thirty days prior to submitting reports of TRS interstate minutes of use in order to receive payment settlements for interstate TRS. (No. of respondents: 13; hours per response: .166 hours; total annual burden: 2.16 hours). Section 64.604(c)(4)(iii)(H)) specifies the reporting, monitoring and filing requirements placed upon the Administrator. (No. of respondents: 1; hours per response: 500; total annual burden: 500 hours). Information submitted in response to the attached rules and requirements is used to administer the TRS Fund. Information is used to calculate a national average rate to recover the total interstate TRS revenue requirements and to determine the appropriate payment due to the TRS providers participating in the shared-funding plan. Obligation to respond: Mandatory.

OMB Control No.: 3060–0391.

Expiration Date: 12/31/2001.

Title: Program to Monitor the Impacts of the Universal Service Support Mechanisms, CC Docket Nos. 98–202 and 96–45.

Form No.: N/A.

Respondents: Business or other for-profit.

Estimated Annual Burden: 859 respondents; 2 hours per response (avg.); 1718 total annual burden hours for all collections.

Estimated Annual Reporting and Recordkeeping Cost Burden: $0.

Frequency of Response: Annually.

Description: The Commission has a program to monitor the impact of the universal service support mechanisms. Among other things, the program requires the reporting of information on network usage and growth. This information is generally maintained by all companies that settle their accounts with NECA on a cost basis. This information is collected by NECA. The data collected are: local dial equipment minutes, intrastate toll dial equipment minutes, interstate toll dial equipment minutes, total dial equipment minutes, interstate dial equipment minute factors, originating premium interstate access minutes, terminating premium interstate access minutes, total premium interstate access minutes, originating non-premium interstate access minutes, terminating non-premium interstate access minutes, and total non-premium interstate access minutes. The monitoring program is necessary for the Commission, the Joint Board, Congress, and the general public to assess the impact of the new universal service support mechanisms. Obligation to respond: Mandatory.

OMB Control No.: 3060–0168.

Expiration Date: 12/31/2001.

Title: Reports of Proposed Changes in Depreciation Rates—Section 43.43.

Form No.: N/A.

Respondents: Business or other for-profit.

Estimated Annual Burden: 11 respondents; 6000 hours per response 66,000 (avg.); total annual burden hours for all collections.

Estimated Annual Reporting and Recordkeeping Cost Burden: $0.

Frequency of Response: On occasion.

Description: Section 220(b) of the Communications Act of 1934 (the Act), as amended, (47 U.S.C. Section 220(b)), states that the Commission may prescribe depreciation charges for the subject carriers. Section 219 of the Act requires annual and other reports from the carriers. Section 43.43 of the Commission's Rules (47 CFR Section 43.43) establishes the reporting requirements for depreciation prescription purposes. Communication common carriers with annual operating revenues of $112 million or more that the Commission has found to be dominant must file information specified in Section 43.43 before making any change in the depreciation rates applicable to their operating plant. Section 220 also allows the Commission, in its discretion, to prescribe the forms of any and all accounts, records, and memoranda to be kept by carriers subject to the Act, including the accounts, records and memoranda of the movement of traffic, as well as receipts and expenditures of moneys. The Communications Act, as amended, seeks to develop efficient competition by opening all telecommunications markets through a pro-competitive, deregulatory national policy framework. To that end, Section 11 of the Act requires the Commission, in every even-numbered year beginning in 1998, to review its regulations applicable to providers of telecommunications service to determine whether the regulations are no longer necessary in the public interest as a result of meaningful economic competition between providers of such service and whether such regulations should be repealed or modified. In the CC Docket No. 137, adopted 7/22/98; released 10/14/98, the Commission proposes to reduce or streamline further our depreciation prescription process by permitting, among other things, summary filings and eliminating the prescription of depreciation rates for incumbent LECs, provided that the carrier uses depreciation factors that are within the ranges adopted by the Commission, expanding the prescribed range for the digital switching plant account, and eliminating salvage from the depreciation process. These proposed modifications are designed to minimize the reporting burden on carriers and to provide incumbent LECs with a greater flexibility to adjust their depreciation rates while allowing the Commission to maintain adequate oversight. If we remove net salvage from the depreciation process, we should create a new account 6566, Net cost of removal, to record both salvage receipts and removal costs incurred. We also tentatively conclude that we should revise Sections 32.3100, Accumulated depreciation, and 32.2000, Instructions for telecommunications plant accounts, to eliminate the provisions that salvage and cost of removal be recorded in the depreciation reserve account. We also requested comment on whether we should require carriers to keep subsidiary record categories in Account 6566 for salvage and cost of removal. The information filed will be used by the Commission to establish proper depreciation rates to be charged by the carriers, pursuant to Section 220(b) of the Act. The information serves as the basis for depreciation analyses made by the Common Carrier Bureau in establishing the aforementioned rates. Without this information, the validity of the carriers' depreciation policies could not be ascertained. The proposals contained in CC Docket No. 98–137 have been approved by OMB. Obligation to respond: required to obtain or retain benefits.

Public reporting burden for the collections of information is as noted above. Send comments regarding the burden estimate or any other aspect of the collections of information, including suggestions for reducing the burden to Performance Evaluation and Records Management, Washington, D.C. 20554.

Federal Communications Commission.

Magalie Roman Salas,

Secretary.

[FR Doc. 99–2862 Filed 2–5–99; 8:45 am]

BILLING CODE 6712–01–P

FEDERAL DEPOSIT INSURANCE CORPORATION

Agency Information Collection Activities: Proposed Collection; Comment Request

AGENCY: Federal Deposit Insurance Corporation (FDIC).

ACTION: Notice and request for comment.

SUMMARY: The FDIC, as part of its continuing effort to reduce paperwork and respondent burden, invites the general public and other Federal agencies to take this opportunity to comment on proposed and/or continuing information collections, as required by the Paperwork Reduction Act of 1995 (44 U.S.C. chapter 35). Currently, the FDIC is soliciting comments concerning an information collection titled ''Certification of Compliance with Mandatory Bars to Employment.''

DATES: Comments must be submitted on or before April 9, 1999.

ADDRESSES: Interested parties are invited to submit written comments to Tamara R. Manly, Management Analyst (Regulatory Analysis), (202) 898–7453, Office of the Executive Secretary, Room 4058, Attention: Comments/OES, Federal Deposit Insurance Corporation, 550 17th Street N.W., Washington, D.C. 20429. All comments should refer to ''Certification of Compliance with Mandatory Bars to Employment.'' Comments may be hand-delivered to the guard station at the rear of the 17th Street Building (located on F Street), on business days between 7:00 a.m. and 5:00 p.m. [Fax number (202) 898–3838; Internet address: comments@fdic.gov].

A copy of the comments may also be submitted to the OMB desk officer for the FDIC: Alexander Hunt, Office of Information and Regulatory Affairs, Officeof Management and Budget, New Executive Office Building, Room 3208, Washington, D.C. 20503.

FOR FURTHER INFORMATION CONTACT: Tamara R. Manly, at the address identified above.

SUPPLEMENTARY INFORMATION:

Proposed to renew the following currently approved collection of information:

Title: Certification of Compliance with Mandatory Bars to Employment.

OMB Number: 3064–0121.

Frequency of Response: Occasional.

Affected Public: Persons interested in being employed or providing services to the FDIC.

Estimated Number of Respondents: 200.

Estimated Time per Response: 20 minutes.

Estimated Total Annual Burden: 66.6 hours.

General Description of Collection: Prior to an offer of employment, job applicants to the FDIC must sign a certification that they have not been convicted of a felony or been in other circumstances that prohibit persons from becoming employed by or providing services to the FDIC.

Request for Comment

Comments are invited on: (a) Whether the collection of information is necessary for the proper performance of the FDIC's functions, including whether the information has practical utility; (b) the accuracy of the estimates of the burden of the information collection, including the validity of the methodology and assumptions used; (c) ways to enhance the quality, utility, and clarity of the information to be collected; and (d) ways to minimize the burden of the information collection on respondents, including through the use of automated collection techniques or other forms of information technology.

At the end of the comment period, the comments and recommendations received will be analyzed to determine the extent to which the collection should be modified prior to submission to OMB for review and approval. Comments submitted in response to this notice also will be summarized or included in the FDIC's requests to OMB for renewal of this collection. All comments will become a matter of public record.

Dated at Washington, D.C., this 2nd day of February, 1999.

Federal Deposit Insurance Corporation.

Robert E. Feldman,

Executive Secretary.

[FR Doc. 99–2847 Filed 2–5–99; 8:45 am]

BILLING CODE 6714–01–M

FEDERAL EMERGENCY MANAGEMENT AGENCY

[FEMA–1261–DR]

Alabama; Major Disaster and Related Determinations

AGENCY: Federal Emergency Management Agency (FEMA).

ACTION: Notice.

SUMMARY: This is a notice of the Presidential declaration of a major disaster for the State of Alabama (FEMA–1261-DR), dated January 15, 1999, and related determinations.

EFFECTIVE DATE: January 15, 1999.

FOR FURTHER INFORMATION CONTACT: Madge Dale, Response and Recovery Directorate, Federal Emergency Management Agency, Washington, DC 20472, (202) 646–3260.

SUPPLEMENTARY INFORMATION: Notice is hereby given that, in a letter dated January 15, 1999, the President declared a major disaster under the authority of the Robert T. Stafford Disaster Relief and Emergency Assistance Act (42 U.S.C. 5121 *et seq.*), as follows:

I have determined that the damage in certain areas of the State of Alabama, resulting from severe winter storms, ice, and freezing rain on December 23–29, 1998, is of sufficient severity and magnitude to warrant a major disaster declaration under the Robert T. Stafford Disaster Relief and Emergency Assistance Act, P.L. 93–288, as amended (''the Stafford Act''). I, therefore, declare that such a major disaster exists in the State of Alabama.

In order to provide Federal assistance, you are hereby authorized to allocate from funds available for these purposes, such amounts as you find necessary for Federal disaster assistance and administrative expenses.

You are authorized to provide Public Assistance and Hazard Mitigation in the designated areas and any other forms of assistance under the Stafford Act you may deem appropriate. Consistent with the requirement that Federal assistance be supplemental, any Federal funds provided under the Stafford Act for Public Assistance or Hazard Mitigation will be limited to 75 percent of the total eligible costs.

Notice is hereby given that pursuant to the authority vested in the Director of the Federal Emergency Management Agency under Executive Order 12148, I hereby appoint Glenn C. Woodard of the Federal Emergency Management Agency to act as the Federal Coordinating Officer for this declared disaster.

I do hereby determine the following areas of the State of Alabama to have been affected adversely by this declared major disaster:

Colbert, Cullman, Franklin, Lauderdale, Lawrence, Limestone, Madison, Marion and Morgan Counties for Public Assistance.

All counties within the State of Alabama are eligible to apply for assistance under the Hazard Mitigation Grant Program.

(The following Catalog of Federal Domestic Assistance Numbers (CFDA) are to be used for reporting and drawing funds: 83.537, Community Disaster Loans; 83.538, Cora Brown Fund Program; 83.539, Crisis Counseling; 83.540, Disaster Legal Services Program; 83.541, Disaster Unemployment

Assistance (DUA); 83.542, Fire Suppression Assistance; 83.543, Individual and Family Grant (IFG) Program; 83.544, Public Assistance Grants; 83.545, Disaster Housing Program; 83.548, Hazard Mitigation Grant Program.)

James L. Witt,

Director.

[FR Doc. 99–2954 Filed 2–5–99; 8:45 am]

BILLING CODE 6718–02–P

FEDERAL EMERGENCY MANAGEMENT AGENCY

[FEMA–1266–DR]

Arkansas; Major Disaster and Related Determinations

AGENCY: Federal Emergency Management Agency (FEMA).

ACTION: Notice.

SUMMARY: This is a notice of the Presidential declaration of a major disaster for the State of Arkansas (FEMA–1266–DR), dated January 23, 1999, and related determinations.

EFFECTIVE DATE: January 23, 1999.

FOR FURTHER INFORMATION CONTACT: Madge Dale, Response and Recovery Directorate, Federal Emergency Management Agency, Washington, DC 20472, (202) 646–3260.

SUPPLEMENTARY INFORMATION: Notice is hereby given that, in a letter dated January 23, 1999, the President declared a major disaster under the authority of the Robert T. Stafford Disaster Relief and Emergency Assistance Act (42 U.S.C. 5121 *et seq.*), as follows:

I have determined that the damage in certain areas of the State of Arkansas, resulting from severe storms, tornadoes, and high winds on January 21, 1999, and continuing, is of sufficient severity and magnitude to warrant a major disaster declaration under the Robert T. Stafford Disaster Relief and Emergency Assistance Act, P.L. 93–288, as amended (''the Stafford Act''). I, therefore, declare that such a major disaster exists in the State of Arkansas.

In order to provide Federal assistance, you are hereby authorized to allocate from funds available for these purposes, such amounts as you find necessary for Federal disaster assistance and administrative expenses.

You are authorized to provide Individual Assistance, debris removal and emergency protective measures (Categories A and B) under the Public Assistance program, and Hazard Mitigation in the designated areas and any other forms of assistance under the Stafford Act you may deem appropriate. Consistent with the requirement that Federal assistance be supplemental, any Federal funds provided under the Stafford Act for Public Assistance or Hazard Mitigation will be limited to 75 percent of the total eligible costs.

The time period prescribed for the implementation of section 310(a), Priority to Certain Applications for Public Facility and Public Housing Assistance, 42 U.S.C. 5153, shall be for a period not to exceed six months after the date of this declaration.

Notice is hereby given that pursuant to the authority vested in the Director of the Federal Emergency Management Agency under Executive Order 12148, I hereby appoint Graham L. Nance of the Federal Emergency Management Agency to act as the Federal Coordinating Officer for this declared disaster.

I do hereby determine the following areas of the State of Arkansas to have been affected adversely by this declared major disaster:

Independence, Pulaski, St. Francis, Saline, and White Counties for Individual Assistance and Categories A and B under the Public Assistance program.

All counties within the State of Arkansas are eligible to apply for assistance under the Hazard Mitigation Grant Program.

(The following Catalog of Federal Domestic Assistance Numbers (CFDA) are to be used for reporting and drawing funds: 83.537, Community Disaster Loans; 83.538, Cora Brown Fund Program; 83.539, Crisis Counseling; 83.540, Disaster Legal Services Program; 83.541, Disaster Unemployment Assistance (DUA); 83.542, Fire Suppression Assistance; 83.543, Individual and Family Grant (IFG) Program; 83.544, Public Assistance Grants; 83.545, Disaster Housing Program; 83.548, Hazard Mitigation Grant Program.)

James L. Witt,

Director.

[FR Doc. 99–2960 Filed 2–5–99; 8:45 am]

BILLING CODE 6718–02–P

FEDERAL EMERGENCY MANAGEMENT AGENCY

[FEMA–1266–DR]

Arkansas; Amendment No. 3 to Notice of a Major Disaster Declaration

AGENCY: Federal Emergency Management Agency (FEMA).

ACTION: Notice.

SUMMARY: This notice amends the notice of a major disaster for the State of Arkansas, (FEMA–1266–DR), dated January 23, 1999, and related determinations.

EFFECTIVE DATE: February 1, 1999.

FOR FURTHER INFORMATION CONTACT: Madge Dale, Response and Recovery Directorate, Federal Emergency Management Agency, Washington, DC 20472, (202) 646–3260.

SUPPLEMENTARY INFORMATION: The notice of a major disaster for the State of Arkansas, is hereby amended to include the following areas among those areas determined to have been adversely affected by the catastrophe declared a major disaster by the President in his declaration of January 23, 1999:

Faulkner, Greene, Jefferson, Miller, Monroe, and Poinsett Counties for Individual Assistance.

(The following Catalog of Federal Domestic Assistance Numbers (CFDA) are to be used for reporting and drawing funds: 83.537, Community Disaster Loans; 83.538, Cora Brown Fund Program; 83.539, Crisis Counseling; 83.540, Disaster Legal Services Program; 83.541, Disaster Unemployment Assistance (DUA); 83.542, Fire Suppression Assistance; 83.543, Individual and Family Grant (IFG) Program; 83.544, Public Assistance Grants; 83.545, Disaster Housing Program; 83.548, Hazard Mitigation Grant Program.)

Laurence W. Zensinger,

Division Director, Response and Recovery Directorate.

[FR Doc. 99–2961 Filed 2–5–99; 8:45 am]

BILLING CODE 6718–02–P

FEDERAL EMERGENCY MANAGEMENT AGENCY

[FEMA–3134–EM]

Illinois; Amendment No. 2 to the Notice of an Emergency

AGENCY: Federal Emergency Management Agency (FEMA).

ACTION: Notice.

SUMMARY: This notice amends the notice of an Emergency for the State of Illinois (FEMA–3134–EM), dated January 8, 1999, and related determinations.

EFFECTIVE DATE: January 15, 1999.

FOR FURTHER INFORMATION CONTACT: Madge Dale, Response and Recovery Directorate, Federal Emergency Management Agency, Washington, DC 20472, (202) 646–3260.

SUPPLEMENTARY INFORMATION: Notice is hereby given that the incident period for this disaster is closed effective January 15, 1999.

(The following Catalog of Federal Domestic Assistance Numbers (CFDA) are to be used for reporting and drawing funds: 83.537, Community Disaster Loans; 83.538, Cora Brown Fund Program; 83.539, Crisis Counseling; 83.540, Disaster Legal Services Program; 83.541, Disaster Unemployment Assistance (DUA); 83.542, Fire Suppression Assistance; 83.543, Individual and Family Grant (IFG) Program; 83.544, Public Assistance Grants; 83.545, Disaster Housing

Program; 83.548, Hazard Mitigation Grant Program.)

Dennis H. Kwiatkowski,

Deputy Associate Director, Response and Recovery Directorate.

[FR Doc. 99–2962 Filed 2–5–99; 8:45 am]

BILLING CODE 6718–02–P

FEDERAL EMERGENCY MANAGEMENT AGENCY

[FEMA–3135–EM]

Indiana; Emergency and Related Determinations

AGENCY: Federal Emergency Management Agency (FEMA).

ACTION: Notice.

SUMMARY: This is a notice of the Presidential declaration of an emergency for the State of Indiana (FEMA–3135–EM), dated January 15, 1999, and related determinations.

EFFECTIVE DATE: January 15, 1999.

FOR FURTHER INFORMATION CONTACT: Madge Dale, Response and Recovery Directorate, Federal Emergency Management Agency, Washington, DC 20472, (202) 646–3260.

SUPPLEMENTARY INFORMATION: Notice is hereby given that, in a letter dated January 15, 1999, the President declared an emergency under the authority of the Robert T. Stafford Disaster Relief and Emergency Assistance Act (42 U.S.C. 5121 *et seq.*), as follows:

I have determined that the impact in certain areas of the State of Indiana, resulting from the record/near record snow on January 1, 1999, and continuing, is of sufficient severity and magnitude to warrant an emergency declaration under the Robert T. Stafford Disaster Relief and Emergency Assistance Act, P.L. 93–288 as amended, (''the Stafford Act''). I, therefore, declare that such an emergency exists in the State of Indiana.

In order to provide Federal assistance, you are hereby authorized to allocate from funds available for these purposes, such amounts as you find necessary for Federal emergency assistance and administrative expenses.

You are authorized to provide emergency protective measures under the Public Assistance program to save lives, protect public health and safety, and property. Other forms of assistance under Title V of the Stafford Act may be added at a later date, as you deem appropriate. You are further authorized to provide this emergency assistance in the affected areas for a period of 48 hours. You may extend the period of assistance, as warranted. Consistent with the requirement that Federal assistance be supplemental, any Federal funds provided under the Stafford Act for Public Assistance will be limited to 75 percent of the total eligible costs.

Notice is hereby given that pursuant to the authority vested in the Director of the Federal Emergency Management Agency under Executive Order 12148, I hereby appoint Lawrence L. Bailey of the Federal Emergency Management Agency to act as the Federal Coordinating Officer for this emergency.

I do hereby determine the following areas of the State of Indiana to have been affected adversely by this emergency:

Adams, Allen, Benton, Blackford, Cass, Clay, Clinton, DeKalb, Delaware, Fountain, Fulton, Grant, Hamilton, Hancock, Hendricks, Henry, Huntington, Jasper, Jay, Johnson, Kosciusko, Lake, Lagrange, LaPorte, Madison, Marion, Marshall, Miami, Montgomery, Newton, Noble, Porter, Pulaski, Randolph, Rush, St. Joseph, Shelby, Starke, Steuben, Tipton, Tippecanoe, Vermillion, Wabash, Warren, Wayne, White, and Whitley counties for reimbursement for emergency protective measures under the Public Assistance program for a period of 48 hours.

(The following Catalog of Federal Domestic Assistance Numbers (CFDA) are to be used for reporting and drawing funds: 83.537, Community Disaster Loans; 83.538, Cora Brown Fund Program; 83.539, Crisis Counseling; 83.540, Disaster Legal Services Program; 83.541, Disaster Unemployment Assistance (DUA); 83.542, Fire Suppression Assistance; 83.543, Individual and Family Grant (IFG) Program; 83.544, Public Assistance Grants; 83.545, Disaster Housing Program; 83.548, Hazard Mitigation Grant Program.)

James L. Witt,

Director.

[FR Doc. 99–2963 Filed 2–5–99; 8:45 am]

BILLING CODE 6718–02–P

FEDERAL EMERGENCY MANAGEMENT AGENCY

[FEMA–3135–EM]

Indiana; Amendment No. 1 to the Notice of an Emergency

AGENCY: Federal Emergency Management Agency (FEMA).

ACTION: Notice.

SUMMARY: This notice amends the notice of a emergency for the State of Indiana (FEMA–3135–EM), dated January 15, 1999, and related determinations.

EFFECTIVE DATE: January 15, 1999.

FOR FURTHER INFORMATION CONTACT: Madge Dale, Response and Recovery Directorate, Federal Emergency Management Agency, Washington, DC 20472, (202) 646–3260.

SUPPLEMENTARY INFORMATION: Notice is hereby given that the incident period for this disaster is closed effective January 15, 1998.

(The following Catalog of Federal Domestic Assistance Numbers (CFDA) are to be used for reporting and drawing funds: 83.537, Community Disaster Loans; 83.538, Cora Brown Fund Program; 83.539, Crisis Counseling; 83.540, Disaster Legal Services Program; 83.541, Disaster Unemployment Assistance (DUA); 83.542, Fire Suppression Assistance; 83.543, Individual and Family Grant (IFG) Program; 83.544, Public Assistance Grants; 83.545, Disaster Housing Program; 83.548, Hazard Mitigation Grant Program.)

Dennis H. Kwiatkowski,

Deputy Associate Director, Response and Recovery Directorate.

[FR Doc. 99–2964 Filed 2–5–99; 8:45 am]

BILLING CODE 6718–02–P

FEDERAL EMERGENCY MANAGEMENT AGENCY

[FEMA–1264–DR]

Louisiana; Major Disaster and Related Determinations

AGENCY: Federal Emergency Management Agency (FEMA).

ACTION: Notice.

SUMMARY: This is a notice of the Presidential declaration of a major disaster for the State of Louisiana (FEMA–1264–DR), dated January 21, 1999, and related determinations.

EFFECTIVE DATE: January 21, 1999.

FOR FURTHER INFORMATION CONTACT: Madge Dale, Response and Recovery Directorate, Federal Emergency Management Agency, Washington, DC 20472, (202) 646–3260.

SUPPLEMENTARY INFORMATION: Notice is hereby given that, in a letter dated January 21, 1999 the President declared a major disaster under the authority of the Robert T. Stafford Disaster Relief and Emergency Assistance Act (42 U.S.C. 5121 *et seq.*), as follows:

I have determined that the damage in certain areas of the State of Louisiana, resulting from a severe ice storm on December 22–28, 1998, is of sufficient severity and magnitude to warrant a major disaster declaration under the Robert T. Stafford Disaster Relief and Emergency Assistance Act, P.L. 93–288, as amended (''the Stafford Act''). I, therefore, declare that such a major disaster exists in the State of Louisiana.

In order to provide Federal assistance, you are hereby authorized to allocate from funds available for these purposes, such amounts as you find necessary for Federal disaster assistance and administrative expenses.

You are authorized to provide Public Assistance and Hazard Mitigation in the designated areas and any other forms of assistance under the Stafford Act you may deem appropriate. Consistent with the requirement that Federal assistance be supplemental, any Federal funds provided under the Stafford Act for Public Assistance

or Hazard Mitigation will be limited to 75 percent of the total eligible costs.

Notice is hereby given that pursuant to the authority vested in the Director of the Federal Emergency Management Agency under Executive Order 12148, I hereby appoint Robert E. Hendrix of the Federal Emergency Management Agency to act as the Federal Coordinating Officer for this declared disaster.

I do hereby determine the following areas of the State of Louisiana to have been affected adversely by this declared major disaster:

Bienville, Catahoula, Claiborne, Desoto, East Carroll, Franklin, Grant, Lincoln, Morehouse, Natchitoches, Ouachita, Red River, Richland, Sabine, Union, Webster, West Carroll, and Winn Parishes for Public Assistance.

All counties within the State of Louisiana are eligible to apply for assistance under the Hazard Mitigation Grant Program.

(The following Catalog of Federal Domestic Assistance Numbers (CFDA) are to be used for reporting and drawing funds: 83.537, Community Disaster Loans; 83.538, Cora Brown Fund Program; 83.539, Crisis Counseling; 83.540, Disaster Legal Services Program; 83.541, Disaster Unemployment Assistance (DUA); 83.542, Fire Suppression Assistance; 83.543, Individual and Family Grant (IFG) Program; 83.544, Public Assistance Grants; 83.545, Disaster Housing Program; 83.548, Hazard Mitigation Grant Program.)

James L. Witt,

Director.

[FR Doc. 99–2958 Filed 2–5–99; 8:45 am]

BILLING CODE 6718–02–P

FEDERAL EMERGENCY MANAGEMENT AGENCY

[FEMA–1263–DR]

Maine; Major Disaster and Related Determinations

AGENCY: Federal Emergency Management Agency (FEMA).

ACTION: Notice.

SUMMARY: This is a notice of the Presidential declaration of a major disaster for the State of Maine (FEMA–1263–DR), dated January 21, 1999, and related determinations.

EFFECTIVE DATE: January 21, 1999.

FOR FURTHER INFORMATION CONTACT: Madge Dale, Response and Recovery Directorate, Federal Emergency Management Agency, Washington, DC 20472, (202) 646–3260.

SUPPLEMENTARY INFORMATION: Notice is hereby given that, in a letter dated January 21, 1999, the President declared a major disaster under the authority of the Robert T. Stafford Disaster Relief and Emergency Assistance Act (42 U.S.C. 5121 *et seq.*), as follows:

I have determined that the damage in certain areas of the State of Maine, resulting from severe storms, heavy rains, high winds, and inland and coastal flooding and erosion on October 8–11, 1998, is of sufficient severity and magnitude to warrant a major disaster declaration under the Robert T. Stafford Disaster Relief and Emergency Assistance Act, P.L. 93–288 as amended, (''the Stafford Act''). I, therefore, declare that such a major disaster exists in the State of Maine.

In order to provide Federal assistance, you are hereby authorized to allocate from funds available for these purposes, such amounts as you find necessary for Federal disaster assistance and administrative expenses.

You are authorized to provide Public Assistance and Hazard Mitigation in the designated areas and any other forms of assistance under the Stafford Act you may deem appropriate. Consistent with the requirement that Federal assistance be supplemental, any Federal funds provided under the Stafford Act for Public Assistance or Hazard Mitigation will be limited to 75 percent of the total eligible costs.

Notice is hereby given that pursuant to the authority vested in the Director of the Federal Emergency Management Agency under Executive Order 12148, I hereby appoint Kevin Merli of the Federal Emergency Management Agency to act as the Federal Coordinating Officer for this declared disaster.

I do hereby determine the following areas of the State of Maine to have been affected adversely by this declared major disaster:

Cumberland and York Counties for Public Assistance.

All counties within the State of Maine are eligible to apply for assistance under the Hazard Mitigation Grant Program.

(The following Catalog of Federal Domestic Assistance Numbers (CFDA) are to be used for reporting and drawing funds: 83.537, Community Disaster Loans; 83.538, Cora Brown Fund Program; 83.539, Crisis Counseling; 83.540, Disaster Legal Services Program; 83.541, Disaster Unemployment Assistance (DUA); 83.542, Fire Suppression Assistance; 83.543, Individual and Family Grant (IFG) Program; 83.544, Public Assistance Grants; 83.545, Disaster Housing Program; 83.548, Hazard Mitigation Grant Program.)

James L. Witt,

Director.

[FR Doc. 99–2957 Filed 2–5–99; 8:45 am]

BILLING CODE 6718–02–P

FEDERAL EMERGENCY MANAGEMENT AGENCY

[FEMA–3137–EM]

Michigan; Emergency and Related Determinations

AGENCY: Federal Emergency Management Agency (FEMA).

ACTION: Notice.

SUMMARY: This is a notice of the Presidential declaration of an emergency for the State of Michigan (FEMA–3137–EM), dated January 27, 1999, and related determinations.

EFFECTIVE DATE: January 27, 1999.

FOR FURTHER INFORMATION CONTACT: Madge Dale, Response and Recovery Directorate, Federal Emergency Management Agency, Washington, DC 20472, (202) 646–3260.

SUPPLEMENTARY INFORMATION: Notice is hereby given that, in a letter dated January 27, 1999, the President declared an emergency under the authority of the Robert T. Stafford Disaster Relief and Emergency Assistance Act (42 U.S.C. 5121 *et seq.*), as follows:

I have determined that the impact in certain areas of the State of Michigan, resulting from the near record snow on January 2, 1999, and continuing, is of sufficient severity and magnitude to warrant an emergency declaration under the Robert T. Stafford Disaster Relief and Emergency Assistance Act, P.L. 93–288 as amended, (''the Stafford Act''). I, therefore, declare that such an emergency exists in the State of Michigan.

In order to provide Federal assistance, you are hereby authorized to allocate from funds available for these purposes, such amounts as you find necessary for Federal disaster assistance and administrative expenses.

You are authorized to provide emergency protective measures under the Public Assistance program to save lives, protect public health and safety, and property. Other forms of assistance under Title V of the Stafford Act may be added at a later date, as you deem appropriate. You are further authorized to provide this emergency assistance in the affected areas for a period of 48 hours. You may extend the period of assistance, as warranted. Consistent with the requirement that Federal assistance be supplemental, any Federal funds provided under the Stafford Act for Public Assistance will be limited to 75 percent of the total eligible costs.

Further, you are authorized to make changes to this declaration to the extent allowable under the Stafford Act.

Notice is hereby given that pursuant to the authority vested in the Director of the Federal Emergency Management Agency under Executive Order 12148, I hereby appoint Lawrence L. Bailey of the Federal Emergency Management Agency to act as the Federal

Coordinating Officer for this declared disaster.

I do hereby determine the following areas of the State of Michigan to have been affected adversely by this declared emergency:

Wayne County for reimbursement for emergency protective measures under the Public Assistance program for a period of 48 hours.

(The following Catalog of Federal Domestic Assistance Numbers (CFDA) are to be used for reporting and drawing funds: 83.537, Community Disaster Loans; 83.538, Cora Brown Fund Program; 83.539, Crisis Counseling; 83.540, Disaster Legal Services Program; 83.541, Disaster Unemployment Assistance (DUA); 83.542, Fire Suppression Assistance; 83.543, Individual and Family Grant (IFG) Program; 83.544, Public Assistance Grants; 83.545, Disaster Housing Program; 83.548, Hazard Mitigation Grant Program.)

James L. Witt,

Director.

[FR Doc. 99–2968 Filed 2–5–99; 8:45 am]

BILLING CODE 6718–02–P

FEDERAL EMERGENCY MANAGEMENT AGENCY

[FEMA–1265–DR]

Mississippi; Major Disaster and Related Determinations

AGENCY: Federal Emergency Management Agency (FEMA).

ACTION: Notice.

SUMMARY: This is a notice of the Presidential declaration of a major disaster for the State of Mississippi (FEMA–1265–DR), dated January 25, 1999, and related determinations.

EFFECTIVE DATE: January 25, 1999

FOR FURTHER INFORMATION CONTACT: Madge Dale, Response and Recovery Directorate, Federal Emergency Management Agency, Washington, DC 20472, (202) 646–3260.

SUPPLEMENTARY INFORMATION: Notice is hereby given that, in a letter dated January 25, 1999, the President declared a major disaster under the authority of the Robert T. Stafford Disaster Relief and Emergency Assistance Act (42 U.S.C. 5121 *et seq.*), as follows:

I have determined that the damage in certain areas of the State of Mississippi, resulting from severe winter storms, ice, and freezing rain on December 22–26, 1998, is of sufficient severity and magnitude to warrant a major disaster declaration under the Robert T. Stafford Disaster Relief and Emergency Assistance Act, P.L. 93–288, as amended (''the Stafford Act''). I, therefore, declare that such a major disaster exists in the State of Mississippi.

In order to provide Federal assistance, you are hereby authorized to allocate from funds available for these purposes, such amounts as you find necessary for Federal disaster assistance and administrative expenses.

You are authorized to provide Public Assistance and Hazard Mitigation in the designated areas and any other forms of assistance under the Stafford Act you may deem appropriate. Consistent with the requirement that Federal assistance be supplemental, any Federal funds provided under the Stafford Act for Public Assistance or Hazard Mitigation will be limited to 75 percent of the total eligible costs.

Notice is hereby given that pursuant to the authority vested in the Director of the Federal Emergency Management Agency under Executive Order 12148, I hereby appoint Michael J. Polny of the Federal Emergency Management Agency to act as the Federal Coordinating Officer for this declared disaster.

I do hereby determine the following areas of the State of Mississippi to have been affected adversely by this declared major disaster:

Attala, Bolivar, Calhoun, Carroll, Chickasaw, Choctaw, Clay, Grenada, Humphreys, Issaquena, Itawamba, Kemper, Leake, Lee, Leflore, Monroe, Montgomery, Neshoba, Noxubee, Oktibbeha, Pontotoc, Prentiss, Sharkey, Sunflower, Tallahatchie, Tishomingo, Union, Warren, Washington, Webster, Winston, Yalobusha, and Yazoo Counties for Public Assistance.

All counties within the State of Mississippi are eligible to apply for assistance under the Hazard Mitigation Grant Program.

(The following Catalog of Federal Domestic Assistance Numbers (CFDA) are to be used for reporting and drawing funds: 83.537, Community Disaster Loans; 83.538, Cora Brown Fund Program; 83.539, Crisis Counseling; 83.540, Disaster Legal Services Program; 83.541, Disaster Unemployment Assistance (DUA); 83.542, Fire Suppression Assistance; 83.543, Individual and Family Grant (IFG) Program; 83.544, Public Assistance Grants; 83.545, Disaster Housing Program; 83.548, Hazard Mitigation Grant Program.)

James L. Witt,

Director.

[FR Doc. 99–2959 Filed 2–5–99; 8:45 am]

BILLING CODE 6718–02–P

FEDERAL EMERGENCY MANAGEMENT AGENCY

[FEMA–3136–EM]

New York; Emergency and Related Determinations

AGENCY: Federal Emergency Management Agency (FEMA).

ACTION: Notice.

SUMMARY: This is a notice of the Presidential declaration of an emergency for the State of New York (FEMA–3136–EM), dated January 15, 1999, and related determinations.

EFFECTIVE DATE: January 15, 1999

FOR FURTHER INFORMATION CONTACT: Madge Dale, Response and Recovery Directorate, Federal Emergency Management Agency, Washington, DC 20472, (202) 646–3260.

SUPPLEMENTARY INFORMATION: Notice is hereby given that, in a letter dated January 15, 1999, the President declared an emergency under the authority of the Robert T. Stafford Disaster Relief and Emergency Assistance Act (42 U.S.C. 5121 *et seq.*), as follows:

I have determined that the impact in certain areas of the State of New York, resulting from the near record snow on January 1, 1999, and continuing, is of sufficient severity and magnitude to warrant an emergency declaration under the Robert T. Stafford Disaster Relief and Emergency Assistance Act, P.L. 93–288 as amended, (''the Stafford Act''). I, therefore, declare that such an emergency exists in the State of New York.

In order to provide Federal assistance, you are hereby authorized to allocate from funds available for these purposes, such amounts as you find necessary for Federal disaster assistance and administrative expenses.

You are authorized to provide emergency protective measures under the Public Assistance program to save lives, protect public health and safety, and property. Other forms of assistance under Title V of the Stafford Act may be added at a later date, as you deem appropriate. You are further authorized to provide this emergency assistance in the affected areas for a period of 48 hours. You may extend the period of assistance, as warranted. Consistent with the requirement that Federal assistance be supplemental, any Federal funds provided under the Stafford Act for Public Assistance will be limited to 75 percent of the total eligible costs.

Notice is hereby given that pursuant to the authority vested in the Director of the Federal Emergency Management Agency under Executive Order 12148, I hereby appoint Marianne C. Jackson of the Federal Emergency Management Agency to act as the Federal Coordinating Officer for this declared disaster.

I do hereby determine the following areas of the State of New York to have been affected adversely by this declared emergency:

The counties of Chautauqua, Erie, and Niagara for reimbursement for emergency protective measures under the Public Assistance program for a period of 48 hours.

(The following Catalog of Federal Domestic Assistance Numbers (CFDA) are to be used for reporting and drawing funds: 83.537, Community Disaster Loans; 83.538, Cora

Brown Fund Program; 83.539, Crisis Counseling; 83.540, Disaster Legal Services Program; 83.541, Disaster Unemployment Assistance (DUA); 83.542, Fire Suppression Assistance; 83.543, Individual and Family Grant (IFG) Program; 83.544, Public Assistance Grants; 83.545, Disaster Housing Program; 83.548, Hazard Mitigation Grant Program.)

James L. Witt,

Director.

[FR Doc. 99–2965 Filed 2–5–99; 8:45 am]

BILLING CODE 6718–02–P

FEDERAL EMERGENCY MANAGEMENT AGENCY

[FEMA–3136–EM]

New York; Amendment No. 1 to Notice of an Emergency

AGENCY: Federal Emergency Management Agency (FEMA).

ACTION: Notice.

SUMMARY: This notice amends the notice of an emergency for the State of New York (FEMA–3136–EM), dated January 15, 1999, and related determinations.

EFFECTIVE DATE: January 15, 1999.

FOR FURTHER INFORMATION CONTACT: Madge Dale, Response and Recovery Directorate, Federal Emergency Management Agency, Washington, DC 20472, (202) 646–3260.

SUPPLEMENTARY INFORMATION: Notice is hereby given that the incident period for this disaster is closed effective January 15, 1999.

(The following Catalog of Federal Domestic Assistance Numbers (CFDA) are to be used for reporting and drawing funds: 83.537, Community Disaster Loans; 83.538, Cora Brown Fund Program; 83.539, Crisis Counseling; 83.540, Disaster Legal Services Program; 83.541, Disaster Unemployment Assistance (DUA); 83.542, Fire Suppression Assistance; 83.543, Individual and Family Grant (IFG) Program; 83.544, Public Assistance Grants; 83.545, Disaster Housing Program; 83.548, Hazard Mitigation Grant Program.)

Dennis H. Kwiatkowski,

Deputy Associate Director, Response and Recovery Directorate.

[FR Doc. 99–2966 Filed 2–5–99; 8:45 am]

BILLING CODE 6718–02–P

FEDERAL EMERGENCY MANAGEMENT AGENCY

[FEMA–3136–EM]

New York; Amendment No. 2 to the Notice of an Emergency

AGENCY: Federal Emergency Management Agency (FEMA).

ACTION: Notice.

SUMMARY: This notice amends the notice of an emergency for the State of New York, (FEMA–3136–EM), dated January 15, 1999, and related determinations.

EFFECTIVE DATE: January 28, 1999

FOR FURTHER INFORMATION CONTACT: Madge Dale, Response and Recovery Directorate, Federal Emergency Management Agency, Washington, DC 20472, (202) 646–3260.

SUPPLEMENTARY INFORMATION: The notice of an emergency for the State of New York, is hereby amended to include the following areas among those areas determined to have been adversely affected by the catastrophe declared a major disaster by the President in his declaration of January 15, 1999:

Cattaraugus, Genesee, Jefferson, Orleans, and Wyoming Counties for reimbursement for emergency protective measures under the Public Assistance program for a period of 48 hours.

(The following Catalog of Federal Domestic Assistance Numbers (CFDA) are to be used for reporting and drawing funds: 83.537, Community Disaster Loans; 83.538, Cora Brown Fund Program; 83.539, Crisis Counseling; 83.540, Disaster Legal Services Program; 83.541, Disaster Unemployment Assistance (DUA); 83.542, Fire Suppression Assistance; 83.543, Individual and Family Grant (IFG) Program; 83.544, Public Assistance Grants; 83.545, Disaster Housing Program; 83.548, Hazard Mitigation Grant Program.)

Lacy E. Suiter,

Executive Associate Director, Response and Recovery Directorate.

[FR Doc. 99–2967 Filed 2–5–99; 8:45 am]

BILLING CODE 6718–02–P

FEDERAL EMERGENCY MANAGEMENT AGENCY

[FEMA–1260–DR]

Tennessee; Major Disaster and Related Determinations

AGENCY: Federal Emergency Management Agency (FEMA).

ACTION: Notice.

SUMMARY: This is a notice of the Presidential declaration of a major disaster for the State of Tennessee (FEMA–1260–DR), dated January 15, 1999 and related determinations.

EFFECTIVE DATE: January 15, 1999.

FOR FURTHER INFORMATION CONTACT: Magda Ruiz, Response and Recovery Directorate, Federal Emergency Management Agency, Washington, DC 20472, (202) 646–3260.

SUPPLEMENTARY INFORMATION: Notice is hereby given that, in a letter dated January 15, 1999, the President declared a major disaster under the authority of the Robert T. Stafford Disaster Relief and Emergency Assistance Act (42 U.S.C. 5121 *et seq.*), as follows:

I have determined that the damage in certain areas of the State of Tennessee, resulting from severe winter storms, ice, and freezing rain on December 23–29, 1998 is of sufficient severity and magnitude to warrant a major disaster declaration under the Robert T. Stafford Disaster Relief and Emergency Assistance Act, P.L. 93–288, as amended (''the Stafford Act''). I, therefore, declare that such a major disaster exists in the State of Tennessee.

In order to provide Federal assistance, you are hereby authorized to allocate from funds available for these purposes, such amounts as you find necessary for Federal disaster assistance and administrative expenses.

You are authorized to provide Public Assistance and Hazard Mitigation in the designated areas and any other forms of assistance under the Stafford Act you may deem appropriate. Consistent with the requirement that Federal assistance be supplemental, any Federal funds provided under the Stafford Act for Public Assistance or Hazard Mitigation will be limited to 75 percent of the total eligible costs.

Notice is hereby given that pursuant to the authority vested in the Director of the Federal Emergency Management Agency under Executive Order 12148, I hereby appoint Glenn C. Woodard of the Federal Emergency Management Agency to act as the Federal Coordinating Officer for this declared disaster.

I do hereby determine the following areas of the State of Tennessee to have been affected adversely by this declared major disaster:

The counties of Anderson, Bedford, Bledsoe, Campbell, Cannon, Claiborne, Coffee, Cumberland, DeKalb, Fentress, Franklin, Giles, Grundy, Hamilton, Hancock, Lawrence, Lewis, Lincoln, Loudon, Marion, Marshall, Monroe, Moore, Morgan, Roane, Scott, Sequatchie, Sevier, Union, Van Buren, Warren, Wayne, and White for Public Assistance.

All counties within the State of Tennessee are eligible to apply for assistance under the Hazard Mitigation Grant Program.

(The following Catalog of Federal Domestic Assistance Numbers (CFDA) are to be used for reporting and drawing funds: 83.537, Community Disaster Loans; 83.538, Cora Brown Fund Program; 83.539, Crisis Counseling; 83.540, Disaster Legal Services Program; 83.541, Disaster Unemployment Assistance (DUA); 83.542, Fire Suppression Assistance; 83.543, Individual and Family Grant (IFG) Program; 83.544, Public Assistance Grants; 83.545, Disaster Housing Program; 83.548, Hazard Mitigation Grant Program.)

James L. Witt,

Director.

[FR Doc. 99–2953 Filed 2–5–99; 8:45 am]

BILLING CODE 6718–02–P

FEDERAL EMERGENCY MANAGEMENT AGENCY

[FEMA–1262–DR]

Tennessee; Major Disaster and Related Determinations

AGENCY: Federal Emergency Management Agency (FEMA).

ACTION: Notice.

SUMMARY: This is a notice of the Presidential declaration of a major disaster for the State of Tennessee (FEMA–1262-DR), dated January 19, 1999 and related determinations.

EFFECTIVE DATE: January 19, 1999

FOR FURTHER INFORMATION CONTACT: Madge Dale, Response and Recovery Directorate, Federal Emergency Management Agency, Washington, DC 20472, (202) 646–3260.

SUPPLEMENTARY INFORMATION: Notice is hereby given that, in a letter dated January 19, 1999, the President declared a major disaster under the authority of the Robert T. Stafford Disaster Relief and Emergency Assistance Act (42 U.S.C. 5121 *et seq.*), as follows:

I have determined that the damage in certain areas of the State of Tennessee, resulting from severe storms, tornadoes, and high winds on January 17, 1999, and continuing, is of sufficient severity and magnitude to warrant a major disaster declaration under the Robert T. Stafford Disaster Relief and Emergency Assistance Act (''the Stafford Act''). I, therefore, declare that such a major disaster exists in the State of Tennessee.

In order to provide Federal assistance, you are hereby authorized to allocate from funds available for these purposes, such amounts, as you find necessary for Federal assistance and administrative expenses.

You are authorized to provide Individual Assistance, debris removal and emergency protective measures (Categories A and B) under the Public Assistance program, and Hazard Mitigation in the designated areas. Further, you are authorized to provide other categories of assistance under the Public Assistance program, if warranted. Consistent with the requirement that Federal assistance be supplemental, any Federal funds provided under the Stafford Act for Public Assistance and Hazard Mitigation will be limited to 75 percent of the total eligible costs.

Further, you are authorized to make changes to this declaration to the extent allowable under the Stafford Act.

The time period prescribed for the implementation of section 310(a), Priority to Certain Applications for Public Facility and Public Housing Assistance, 42 U.S.C. 5153, shall be for a period not to exceed six months after the date of this declaration.

Notice is hereby given that pursuant to the authority vested in the Director of the Federal Emergency Management Agency under Executive Order 12148, I hereby appoint Paul W. Fay, Jr. of the Federal Emergency Management Agency to act as the Federal Coordinating Officer for this declared disaster.

I do hereby determine the following areas of the State of Tennessee to have been affected adversely by this declared major disaster:

The counties of Carroll, Crockett, Decatur, Dickson, Hardeman, Haywood, Henderson, Lauderdale, Madison, Maury, Montgomery, and Perry for Individual Assistance and debris removal and emergency protective measures (Categories A and B) under the Public Assistance program.

All counties within the State of Tennessee are eligible to apply for assistance under the Hazard Mitigation Grant Program.

(The following Catalog of Federal Domestic Assistance Numbers (CFDA) are to be used for reporting and drawing funds: 83.537, Community Disaster Loans; 83.538, Cora Brown Fund Program; 83.539, Crisis Counseling; 83.540, Disaster Legal Services Program; 83.541, Disaster Unemployment Assistance (DUA); 83.542, Fire Suppression Assistance; 83.543, Individual and Family Grant (IFG) Program; 83.544, Public Assistance Grants; 83.545, Disaster Housing Program; 83.548, Hazard Mitigation Grant Program.)

James L. Witt,

Director.

[FR Doc. 99–2955 Filed 2–5–99; 8:45 am]

BILLING CODE 6718–02–P

FEDERAL EMERGENCY MANAGEMENT AGENCY

[FEMA–1262–DR]

Tennessee; Amendment No. 3 to Notice of a Major Disaster Declaration

AGENCY: Federal Emergency Management Agency (FEMA).

ACTION: Notice.

SUMMARY: This notice amends the notice of a major disaster for the State of Tennessee, (FEMA–1262–DR), dated January 19, 1999, and related determinations.

EFFECTIVE DATE: February 1, 1999.

FOR FURTHER INFORMATION CONTACT: Madge Dale, Response and Recovery Directorate, Federal Emergency Management Agency, Washington, DC 20472, (202) 646–3260.

SUPPLEMENTARY INFORMATION: The notice of a major disaster for the State of Tennessee, is hereby amended to include the following areas among the areas determined to have been adversely affected by the catastrophe declared a major disaster by the President in his declaration of January 19, 1999:

Fayette and Houston Counties for Individual Assistance.

Giles, Jackson, Lawrence, Lewis, Stewart, and Wayne Counties for Public Assistance.

(The following Catalog of Federal Domestic Assistance Numbers (CFDA) are to be used for reporting and drawing funds: 83.537, Community Disaster Loans; 83.538, Cora Brown Fund Program; 83.539, Crisis Counseling; 83.540, Disaster Legal Services Program; 83.541, Disaster Unemployment Assistance (DUA); 83.542, Fire Suppression Assistance; 83.543, Individual and Family Grant (IFG) Program; 83.544, Public Assistance Grants; 83.545, Disaster Housing Program; 83.548, Hazard Mitigation Grant Program.)

Laurence W. Zensinger,

Division Director, Response and Recovery Directorate.

[FR Doc. 99–2956 Filed 2–5–99; 8:45 am]

BILLING CODE 6718–02–P

FEDERAL RESERVE SYSTEM

Formations of, Acquisitions by, and Mergers of Bank Holding Companies; Correction

This notice corrects a notice (FR Doc. 99-2237) published on page 4873 of the issue for Monday, February 1, 1999.

Under the Federal Reserve Bank of Atlanta heading, the entry for First Banking Company of Southeast Georgia, Statesboro, Georgia, is revised to read as follows:

A. Federal Reserve Bank of Atlanta (Lois Berthaume, Vice President) 104 Marietta Street, N.W., Atlanta, Georgia 30303-2713:

1. First Banking Company of Southeast Georgia, Statesboro, Georgia; to merge with Wayne Bancorp, Inc., Jesup, Georgia, and thereby indirectly acquire Wayne National Bank, Jesup, Georgia.

Comments on this application must be received by February 25, 1999.

Board of Governors of the Federal Reserve System, February 2, 1999.

Robert deV. Frierson,

Associate Secretary of the Board.

[FR Doc. 99–2908 Filed 2–5–99; 8:45 am]

BILLING CODE 6210–01–F

FEDERAL RESERVE SYSTEM

Formations of, Acquisitions by, and Mergers of Bank Holding Companies

The companies listed in this notice have applied to the Board for approval, pursuant to the Bank Holding Company Act of 1956 (12 U.S.C. 1841 *et seq.*) (BHC Act), Regulation Y (12 CFR Part

225), and all other applicable statutes and regulations to become a bank holding company and/or to acquire the assets or the ownership of, control of, or the power to vote shares of a bank or bank holding company and all of the banks and nonbanking companies owned by the bank holding company, including the companies listed below.

The applications listed below, as well as other related filings required by the Board, are available for immediate inspection at the Federal Reserve Bank indicated. The application also will be available for inspection at the offices of the Board of Governors. Interested persons may express their views in writing on the standards enumerated in the BHC Act (12 U.S.C. 1842(c)). If the proposal also involves the acquisition of a nonbanking company, the review also includes whether the acquisition of the nonbanking company complies with the standards in section 4 of the BHC Act. Unless otherwise noted, nonbanking activities will be conducted throughout the United States.

Unless otherwise noted, comments regarding each of these applications must be received at the Reserve Bank indicated or the offices of the Board of Governors not later than March 2, 1999.

A. Federal Reserve Bank of Richmond (A. Linwood Gill III, Assistant Vice President) 701 East Byrd Street, Richmond, Virginia 23261-4528:

1. Millennium Bankshares Corporation, Reston, Virginia; to become a bank holding company by acquiring 100 percent of the voting shares of Millennium Bank, N.A., Reston, Virginia (in organization).

Board of Governors of the Federal Reserve System, February 2, 1999.

Robert deV. Frierson,

Associate Secretary of the Board.

[FR Doc. 99–2909 Filed 2–5–99; 8:45 am]

BILLING CODE 6210–01–F

FEDERAL RESERVE SYSTEM

Notice of Proposals to Engage in Permissible Nonbanking Activities or to Acquire Companies that are Engaged in Permissible Nonbanking Activities

The companies listed in this notice have given notice under section 4 of the Bank Holding Company Act (12 U.S.C. 1843) (BHC Act) and Regulation Y, (12 CFR Part 225) to engage *de novo*, or to acquire or control voting securities or assets of a company, including the companies listed below, that engages either directly or through a subsidiary or other company, in a nonbanking activity that is listed in § 225.28 of Regulation Y (12 CFR 225.28) or that the Board has determined by Order to be closely related to banking and permissible for bank holding companies. Unless otherwise noted, these activities will be conducted throughout the United States.

Each notice is available for inspection at the Federal Reserve Bank indicated. The notice also will be available for inspection at the offices of the Board of Governors. Interested persons may express their views in writing on the question whether the proposal complies with the standards of section 4 of the BHC Act.

Unless otherwise noted, comments regarding the applications must be received at the Reserve Bank indicated or the offices of the Board of Governors not later than February 22, 1999.

A. Federal Reserve Bank of San Francisco (Maria Villanueva, Manager of Analytical Support, Consumer Regulation Group) 101 Market Street, San Francisco, California 94105-1579:

1. Wells Fargo & Company, San Francisco, California, and Norwest Insurance, Inc., Minneapolis, Minnesota; to acquire through a joint venture, ATI Title Agency of Ohio, Inc., Cleveland, Ohio, and thereby engage in title insurance agency, escrow and other real estate closing services, pursuant to §§ 225.28(b)(2)(i),(v), and (viii) of Regulation Y.

Board of Governors of the Federal Reserve System, February 2, 1999.

Robert deV. Frierson,

Associate Secretary of the Board.

[FR Doc. 99–2910 Filed 2–5–99; 8:45 am]

BILLING CODE 6210–01–F

GENERAL SERVICES ADMINISTRATION

Public Building Service; Record of Decision, Proposed Disposal of Governors Island, New York Harbor, New York, NY

I. Introduction

The United States General Services Administration (GSA) announces its decision, in accordance with the National Environmental Policy Act of 1969, as amended (NEPA), and the regulations issued by the Council on Environmental Quality (40 CFR Parts 1500–1508), for the proposed disposal of federally-owned real property known as Governors Island, New York Harbor, New York, New York. The purpose of this Record of Decision (ROD) is to clearly communicate GSA's decision on implementing the Preferred Alternative identified in the Final Environmental Impact Statement dated November 4, 1998 (the FEIS) and the basis for that decision, and to identify any mitigation measures to be implemented as part of that decision. This ROD describes the alternatives considered and the rationale for selecting the chosen alternative and documents my decision regarding this proposal.

Public scoping meetings for the Draft Environmental Impact Statement (the DEIS) were held on December 16 and 17, 1997. The period for comments on the proposed disposal action was open from December 1, 1997 and ended on January 19, 1998. GSA released the DEIS for a 45-day public comment period on June 5, 1998. Public hearings were held during the comment period on June 24 and 25, 1998. The FEIS was released for a 30-day public comment period which closed on December 14, 1998. GSA provided written Notices of Availability for these documents in the **Federal Register**, local newspapers and direct mailings to interested parties.

The purpose and need for the proposed action is for GSA to comply with a legislative directive with respect to approximately 172 acres of Federally-owned property known as Governors Island, New York, as provided in the Balanced Budget Act of 1997 (Item 373:[17], Sec. 9101) as signed by President Clinton, described below:

(a) In General—Notwithstanding any other provision of law, the administrator of General Services shall, no earlier than fiscal year 2002, dispose of by sale at fair market value all rights, title, and interests of the United States in and to the land of, and improvements to, Governors Island, New York.

(b) Right of First Offer—Before a sale is made under subsection (a) to any other parties, the State of New York and the City of New York shall be given the right of first offer to purchase all or part at fair market value as determined by the Administrator of General Services, such right may be exercised by either the State of New York or the City of New York or by both the parties acting jointly.

(c) Proceeds—Proceeds from the disposal of Governors Island under subsection (a) shall be deposited in the general fund of the Treasury and credited as miscellaneous receipts.

In accordance with NEPA, GSA disclosed information concerning the potential environmental effects associated with the disposition of this property. GSA examined a range of reasonably foreseeable land use options that might be implemented on the island by another party after disposal. GSA has no authority to implement a reuse on Governors Island. Potential future reuses on Governors Island would be subject to their own environmental and land use review

processes upon implementation. The ultimate reuse scheme for the island will be determined by the future owners and will be subject to all applicable Federal, State and local regulations.

II. Alternatives Considered

Through the environmental review process, GSA identified a preferred alternative, the Action Alternative (disposition of Governors Island), as well as the No Action Alternative (retention of Governors Island). In conjunction with the disposition alternative, and in order to disclose any potential impacts and/or benefits that could result from the island's reuse by a party other than GSA after disposition, a number of potential Land Use Options were reviewed for Governors Island. These options were developed during the preparation of the Governors Island Land Use Study, commissioned by GSA. The land use options are illustrative of a range of reasonably foreseeable reuses that might be implemented on the island by another party or parties. The options were developed based on a year-long effort that included input from local, State and Federal agencies as well as the public at large. The options are not reflective of any GSA plans for the future of the island. The land use options encompass what GSA believes to be a range of reasonable and likely land uses, given the island's opportunities and constraints. Before the implementation of any future reuse of the island the sponsoring party would need to comply with all of the applicable local, State, and Federal laws and regulations. This may include the preparation of a project-specific Environmental Assessment or Environmental Impact Statement and the provision of a specific mitigation plan.

A. No Action Alternative

The No-Action Alternative assumes that the island is not disposed of by GSA after the fiscal year (FY) 2002. Under this alternative, the Federal government would retain ownership of Governors Island. The annual appropriation of monies for the on-island caretaking effort are assumed to continue.

B. Action Alternative

The Action Alternative involves the disposition of Governors Island by GSA. As directed by the Balanced Budget Act of 1997, GSA has been limited to two distinct means by which to dispose of Governors Island; disposition to New York State or New York City for fair market value; and, disposition to another or entities for fair market value.

Because of GSA's mandate under the Balanced Budget Act to dispose of the island to another party, as well as GSA's inability to specify or control the land uses that may be developed on disposed property in the future, a precise statement of the specific land use-related environmental and socioeconomic effects that could result from reuse would be largely hypothetical. In response to the lack of certainty concerning a future reuse for the island, GSA has developed a range of reasonably foreseeable land use options that might result upon disposition of the island. These land use options were developed through a planning effort undertaken by the United States Coast Guard (USCG) and GSA, with input from New York State and New York City officials as well as the public, which culminated in the Governors Island Land Use Study.

The specific purpose of the land use options was to describe a range of reasonable uses that could be implemented on the Island upon disposition. The FEIS generically disclosed the potential impacts pertaining to the short and long term, direct and indirect, beneficial and adverse significant regional cumulative impacts associated with these land use options.

This analysis was provided in order to explore the issues associated with the reuse of the island by a party other than GSA. GSA has no intention of implementing any of the Land Use Options. The potential land use options that resulted from the Governors Island Land Use Study analyzed in conjunction with the Action Alternative, disposition of Governors Island, are as follows:

1. *Reuse Option.* This option reuses as many buildings as is feasible, while expanding open space. There is a strong residential focus.

2A. *Academic Option.* This option assumes use of the Island by an academic institution of approximately 4,000 students. There is a large open and recreational space component.

2B. *Academic Option with New York City Proposal for a Casino.* This option is similar to the Academic Option, with the inclusion of a gambling casino and its necessary ancillary facilities. Review of this option was requested by New York City during the environmental scoping period.

3. *Recreation Option.* This option's predominant use is a 70-acre public park. Some residential units and a conference center are also included.

4. *Mixed Use Option.* This option strikes a balance between new development and a public park. Major components of this option include a 42-acre park and approximately 2,400 housing units.

5. *Maximum Development Option.* This option features the highest residential density (4,450 units in apartments and townhouses) of all the land use options. It also includes a 20-acre park, hotel, golf course and retail uses.

6. *Phase-In Option.* This option is intended for transitional use of existing facilities prior to implementation of any of the land use options. Residential and hotel or hostel use is emphasized.

The FEIS provides a narrative description and a tabular summary of the potential environmental consequences of each of the land use options. Recommended mitigation for any adverse environmental consequences is also set forth in the narrative description and tabular summary. GSA itself has no intention of implementing any of the land use options, and only intends to transfer the property to another party who would determine the island's ultimate land use. Mitigation for any future adverse impacts identified in association with the land use options or other specific development plans would be the responsibility of the future owner of Governors Island. A specific development plan for the island would be subject to Federal, State and local regulations that would ensure proper mitigation of adverse impacts associated with any future development.

III. Decision

Based upon review of the written materials associated with the environmental review process, including the transcripts of the scoping and public hearings and the comments received from those who reviewed the DEIS and FEIS, I have decided to proceed with the disposal of Governors Island under the Action Alternative as summarized above. This ROD is in keeping with the statutory mission of GSA to dispose of Federally-owned real property, as well as the Balanced Budget Act of 1997 that mandates disposal of Governor Island. My decision is based on the following factors:

A. On October 16, 1995, the USCG announced that it would close Governors Island by the end of Summer 1997. This decision was made in response to the Presidential mandate to meet the goals of the National Performance and Results Act, and the challenge of reducing the Federal budget deficit. The USCG developed a five-part Integrated Business Decision Package, of which closing Support

Center New York on Governors Island was a key element.

An Environmental Assessment (EA) was prepared under the guidance of Coast Guard direction COMDTINST M16475.1B (Final Environmental Assessment for the Closure of Support Center New York, Governors Island, May 1995), pursuant to NEPA. This EA evaluated the closure of Governors Island for potential environmental impacts. The EA concluded that no significant environmental impacts would result from the closure of Governors Island and relocation of USCG commands under the preferred alternative of standard maintenance.

B. Governors Island is subject to special legislation incorporated as part of the Balanced Budget Act of 1997 (Item 373:[17], Sec. 9101), as signed by President Clinton. The act directs GSA to dispose of Governors Island at fair market value no earlier than FY 2002. The State and city of New York have the right of first offer to purchase all or part of the island at fair market value. Disposition of the island under the Action Alternative is in compliance with this legislation.

C. Since closure of the USCG facility, the island and its structures have been maintained by a caretaker detachment of Federal and contract personnel at an approximate annual cost of $6 million in FY 1998 and $7 million in FY 1999, respectively. The responsibility of continuing maintenance of Governors Island would be transferred to the owner of the island upon disposition, thus alleviating the Federal Government of the annual expenditure for maintenance of the island.

D. The island is acknowledged to contain resources of historic merit. In fulfillment of its consultation responsibilities under Section 106 of the National Historic Preservation Act, GSA was a signatory to a Programmatic Agreement between the USCG, the Advisory Council on Historic Preservation, the New York State Historic Preservation Officer, the city of New York, and the National Trust for Historic Preservation. This agreement provides for the preservation of the Governors Island National Historic Landmark District (GINHL) and continuing covenants which will be binding upon the new owner of the property. GSA is presently preparing the Governors Island Preservation and Design Manual, which will become the governing document for all future preservation and maintenance activities within the GINHL. The obligation for adherence to the provisions of this document will be transferred along with the island's title upon disposition. This guarantees the future preservation of the GINHL after disposition.

E. Disposal of Governors Island by GSA does not have any direct effect on the physical, biological or manmade environment. Any future reuse of the island would need to comply with any and all Federal, State, and local regulations. If there were project-specific impacts at that time, they would need to be disclosed and mitigated by the future owner of the island.

F. The USCG is currently completing all environmental closure and clean-up operations in compliance with Federal, State and local regulatory standards prior to disposal of the island. Full remediation will have occurred by the time of transfer of the island, or the USCG will continue such remediation after transfer as necessary.

G. The FEIS provided recommended mitigation for any adverse environmental impacts identified in association with the land use options. However, mitigation for any such adverse environmental impacts would be the responsibility of the future owner of Governors Island. A specific development plan for the island would be subject to Federal, State and local regulations that would ensure proper mitigation of any associated impacts.

IV. Environmentally Preferred Alternative

As required by NEPA, a lead agency must identify its environmentally preferred alternative. The environmentally preferred alternative is the alternative which best satisfies and promotes the national environmental policies incorporated in Section 101 of NEPA. The Action Alternative, disposition of Governors Island, is both the preferred and the environmentally preferred alternative. By disposing of Governors Island to another party, the Balanced Budget Act would be adhered to, the property could begin to generate tax revenue (if disposed of to a private entity) that might offset any maintenance costs associated with the island, and the public could potentially gain access to this previously secured facility. Disposal will also allow for reuse of the GINHL in compliance with the Programmatic Agreement and the *Governors Island Preservation and Design Manual*, ensuring the appropriate maintenance and preservation of this resource. Disposal of Governors Island would not have any direct adverse effect on the physical, biological, or man-made environment, but rather beneficial impacts could be realized as cited above. Any specific development plan for the island would be subject to Federal, State and local regulations that would ensure proper mitigation of any associated impacts.

V. Environmental Impacts and Mitigation Measures

In terms of environmental harm and degradation, the Action Alternative, disposition of Governors Island, would have minimal or no adverse impacts to physical and natural resources, biological resources, and man-made or socioeconomic characteristics. All practical means to alleviate, minimize and/or compensate environmental harm were considered.

Under the first scenario of the Action Alternative, Governors Island would be disposed of to New York State or New York City (NYS and/or NYC) for fair market value no earlier than FY 2002. The responsibility of continued preservation and maintenance of the National Register Landmark District would be transferred to NYS and/or NYC along with the island's title. Generally, properties owned by NYS or NYC do not generate tax revenue. Under this Action Alternative scenario, the change in public ownership would not necessarily constitute an increase in tax revenue for the city or state. The possibility does exist, however, that NYS and/or NYC would create an arrangement on the island where some land uses would be privately sponsored and would pay taxes. Similarly, if the island is disposed of to NYS and/or NYC the burden of providing services on the island would fall to local government. Transfer of the island to NYS and/or NYC could enable public access to a portion of the city previously unavailable to visitors and possibly create additional open space for the city. It is not anticipated that the addition of Governors Island to the NYC real estate market would adversely affect prices for comparable properties, as the current real estate market is strong and Governors Island possesses unique characteristics (size, location, existing facilities). Under the Action Alternative, the sale of Governors Island for fair market value would result in the Federal government realizing a monetary gain. Additionally, the Federal government's responsibility for caretaking on the island would cease and the annual recurring expense for caretaking would end. Disposal of Governors Island to NYS and/or NYC does not have any direct effect on the physical, biological or man-made environment. Any future development of the island by NYS and/or NYC would be subject to all applicable Federal, State, and local regulations.

Under the second scenario associated with the Action Alternative, Governors Island would be disposed of to an entity other than NYS and/or NYC for fair market value. The continued preservation and maintenance of the GINHL district would be an obligation transferred along with the island's title. Disposition to an entity other than NYS and/or NYC under the Action Alternative could be beneficial in terms of the creation of new tax ratables within NYC. Additionally, if profit-generating uses occur on the island, these uses would generate sales or corporate taxes, which would accrue to NYS and/or NYC. Provision of police, fire and other municipal services to Governors Island would be necessary, the cost of which could be offset to some degree by taxes. The possibility exists that the island could be disposed of to a not-for-profit institution at fair market value, or some combination of not-for-profit entity. In this case the not-for-profit institution would be exempt from paying taxes. This could result in a burden to local services without commensurate tax relief. A Payment in Lieu of Taxes (PILOT) could offset this burden. Under this scenario, the Federal Government would realize the financial gains generated from sale of the island, as well as the annual savings of the costs associated with maintaining the island. Disposal of Governors Island to an entity or entities other than NYS and/or NYC does not have any direct effect on the physical, biological or man-made environment. Any future development of the island by the new owner would be subject to all applicable Federal, State, and local regulations.

VI. Supporting Information

GSA has received a limited number of comments concerning the FEIS. Upon review of these comments, I am satisfied that they have already been sufficiently addressed in both the DEIS and FEIS. In support of this, GSA has received notification from the Environmental Protection Agency (EPA) that ''In light of the covenants that will be set forth in the transfer deed, we have concluded that the proposed project would not result in significant adverse environmental impacts; therefore, EPA has not objections to the implementation of the proposed project''.

The Port Authority of the State of New York and New Jersey has requested that in reference to the Hazardous Materials Sections of the ''Re-Use Options'', GSA ''forbear from characterization of dredged material absent actual sampling and testing''. The FEIS disclosed that if dredging were determined to be necessary adjacent to the island in connection with the construction of docks or piers, ''and the spoil is contaminated, or is ocean-dumped, this may constitute an impact under Section 103 of the Marine Protection, Research, and Sanctuaries Act'' (Governors Island Disposition FEIS, November 1998, pp. IV.E–9, IV.R–52, IV.E–90, IV.E–109, IV.E–131). Because of the conceptual nature of the land use options, it is not clear if dredging is actually necessary. GSA did not intend to indicate that spoil material *is* contaminated, rather that *if* the spoil were contaminated the potential for impact could exist. In order to determine the nature of any spoil material associated with dredging activities an actual sampling and testing program would need to be undertaken.

The Port Authority also indicated that the * * * disposition to New York City or New York State is preferable to a private disposition and should be evaluated as such in the decision-making process.'' As indicated earlier, GSA has undertaken the disposition of Governors Island as directed by the Balanced Budget Act of 1997. While the Balanced Budget Act does provide the city and State of New York with the right of first offer (at fair market value), it does not designate a preference as to the purchaser of the island. In keeping with the directive offered in this Act, GSA has employed a similar two-tiered approach to the environmental review of the disposition of the island. The potential benefits and impacts associated with disposition to New York City and/or New York State as well as to a private/institutional party have been fully disclosed in the FEIS. The selection of the disposition alternative as the preferred alternative does not indicate a preference as to the purchaser of the island yet it still allows the State and or city of New York the right of first offer. I believe that sufficient background information concerning the effects of disposition to a public or private entity has been provided to the appropriate parties in the decision-making process.

Finally, a letter received from the Regional Plan Association (RPA) indicates that ''[t]he DEIS does not adequately examine the consequences of its action alternatives''. I disagree with this assessment and am confident that the analysis of the action alternative has been conducted and the impacts and benefits disclosed as required by NEPA. As I indicated above, GSA has disclosed the impacts and benefits associated with the disposition of the island to either New York City/New York State or another entity. Additionally, in conjunction with the action alternative, GSA has identified and analyzed a range of reasonably foreseeable reuse options that could occur on the island. In total, GSA has provided a sufficient level of review of the consequences associated with the disposition of the island.

VII. Conclusion

Environmental and other relevant concerns presented by interested agencies and private citizens have been fully addressed within the FEIS. GSA believes there are no outstanding environmental issues to be resolved with respect to the proposed project which are within the mission capabilities of this agency.

After consulting with GSA staff, reviewing the FEIS and all of its related materials, it is my decision GSA will proceed with the disposal of Federally-owned real property known as Governors Island, New York Harbor, New York.

Dated: January 27, 1999.

Robert W. Martin,

Acting Regional Administrator.

[FR Doc. 99–2722 Filed 2–5–99; 8:45 am]

BILLING CODE 6820–23–M

DEPARTMENT OF HEALTH AND HUMAN SERVICES

Statement of Organization, Functions and Delegations of Authority; Program Support Center

Part P (Program Support Center) of the Statement of Organization, Functions and Delegations of Authority for the Department of Health and Human Services (60 FR 51480, October 2, 1995 as amended most recently at 63 FR 71143, December 23, 1998) is amended to reflect changes in Chapter PB within Part P, Program Support Center, Department of Health and Human Services. The Human Resources Service (HRS) is reorganizing and realigning its divisions which perform personnel activities by consolidating the personnel operations and employee/labor relations functions into two newly established Divisions: The Division of Personnel Operations—Parklawn and the Division of Personnel Operations—Switzer. The proposed organizational structure will better support the HRS in its role as a multi-customer, competitive, service-for-fee cost center. The HRS is also clarifying the statement describing the Board for Correction of PHS Commissioned Corps Records to reflect that its operations are overseen by an Executive Director who is located in the immediate Office of the Director, Program Support Center.

Program Support Center

Under *Part P, Section P–20, Functions*, change the following:

Under *Chapter PB, Human Resources Service (PB)* delete the titles and functional statements for the *Personnel Policy, Programs and Organizational Development Division (PBN); Personnel Operations Division (PBP)* and the *Employee and Labor Relations Division (PBR)* in their entirety.

Establish the *Division of Personnel Operations—Parklawn (PBS)* and enter the functional statement as follows:

Division of Personnel Operations—Parklawn (PBS) (1) Administers comprehensive human resources management and employee/labor relations programs for headquarters and field components of the Program Support Center (PSC), other Health and Human Services (HHS) components, and external customers; (2) Develops and implements strategies and processes to ensure the progression of the Division of Personnel Operations—Parklawn in its role as a multi-customer, competitive, service-for-fee cost center; (3) Formulates and implements marketing strategies to promote the utilization of the Division of Personnel Operations—Parklawn services by other HHS components and external customers; (4) Provides consultation and assistance on employee relations services including adverse actions, employee performance deficiencies, discipline, grievances and appeals, reductions-in-force, incentive awards programs, leave regulations, standards of conduct, fitness for duty, violence in the workplace, worker's compensation, conflict of interest such as outside activities, and financial disclosures; (5) Provides advice and assistance concerning the interpretation and application of term and other agreements negotiated with labor organizations, the duty to bargain, other obligations to unions and employees under the Federal Labor-Management Relations Statute, and other applicable laws and governmentwide regulations. Provides managerial advisory services on contract dispute resolution and National Partnership Council; (6) Provides full range of personnel operations services and consultations on human resources activities including recruitment, staffing, position classification, pay administration, performance management, awards, security, special and executive recruitment, retirement and benefits counseling, maintenance of official personnel records, and Commissioned Corps liaison activities; (7) Provides expert managerial advisory services including analyzing employee resources, forecasting future requirements, and coordinating policy to meet departmental mission and public interest needs; and (8) Administers special initiative programs including special incentives, honor awards programs, and special leave programs.

Establish the *Division of Personnel Operations—Switzer (PBT)* and enter the functional statement as follows:

Division of Personnel Operations—Switzer (PBT)

(1) Administers comprehensive human resources management and employee/labor relations programs for headquarters and field components of the Office of the Secretary (0S), the Office of the Inspector General (OIG), the Administration on Aging (AoA), other Health and Human Services (HHS) components, and external customers; (2) Develops and implements strategies and processes to ensure the progression of the Division of Personnel Operations—Switzer in its role as a multi-customer, competitive, service-for-fee cost center; (3) Formulates and implements marketing strategies to promote the utilization of the Division of Personnel Operations—Switzer services by other HHS components and external customers; (4) Provides consultation and assistance on employee relations services including adverse actions, employee performance deficiencies, discipline, grievances and appeals, reductions-in-force, incentive awards programs, leave regulations, standards of conduct, fitness for duty, violence in the workplace, retirement, worker's compensation, conflict of interest such as outside activities, and financial disclosures; (5) Provides full range of personnel operations services and consultations on human resources activities including recruitment, staffing, position classification, pay administration, performance management, awards, security, special and executive recruitment, retirement and benefits counseling, maintenance of official personnel records, and Commissioned Corps liaison activities; (6) Provides advice and assistance concerning the interpretation and application of term and other agreements negotiated with labor organizations, the duty to bargain, other obligations to unions and employees under the Federal Labor-Management Relations Statute, and other applicable laws and governmentwide regulations. Provides managerial advisory services on contract dispute resolution and National Partnership Council; (7) Provides expert managerial advisory services including analyzing employee resources, forecasting future requirements, and coordinating policy to meet departmental mission and public interest needs; (8) Provides consultative service and expert advice to organizations effecting change management activities. Specialized services include restructuring, streamlining, employee empowerment, quality management, team building, program evaluation, and other organizational improvement efforts; (9) Oversees the operation of the Career Management Center and provides individual consultative services and expert advice to employees on career related activities; (10) Oversees the operation of the Employee Assistance Program (EAP) for the OS and other HHS components. Services include intake, assessment, referral of employees, and education of employees and management about EAP services; and (11) Administers special initiative programs including special incentives, honor awards programs, and special leave programs.

Under *Chapter PB, Human Resources Service, (PB),* after the heading *Human Resources Service (PB),* delete item (7) in its entirety and insert a new item (7) as follows: ''(7) Provides Executive Secretariat services for the Board for Correction of PHS Commissioned Corps Records. The Board is overseen by an Executive Director who is located in the immediate Office of the Director, PSC.''

Dated: February 1, 1999.

Lynnda M. Regan,

Director, Program Support Center.

[FR Doc. 99–2935 Filed 2–5–99; 8:45 am]

BILLING CODE 4168–17–M

DEPARTMENT OF HEALTH AND HUMAN SERVICES

Centers for Disease Control and Prevention

[Program Announcement 99033]

State and Local Childhood Lead Poisoning Prevention Programs; Notice of Availability of Funds

A. Purpose

The Centers for Disease Control and Prevention (CDC) announces the availability of fiscal year (FY) 1999 funds for new and competing continuation state and local programs to develop and improve childhood lead poisoning prevention activities and build statewide capacity to conduct surveillance of blood lead levels in children. This announcement is related

to the priority area of Environmental Health.

This grant program is to provide the impetus for the development, implementation, expansion, and evaluation of state and local childhood lead poisoning prevention programs which include statewide surveillance capacity to determine areas at high risk for lead exposure. In particular, this grant program is to carry out the core public health functions in childhood lead poisoning prevention programs (CLPPP). More specifically, this grant program is to bring about: (1) Screening of children who are potentially exposed to lead and follow-up care for children who are identified with elevated blood lead levels (BLLs); (2) awareness and action among the general public and affected professionals in relation to preventing childhood lead poisoning; and (3) primary prevention of childhood lead poisoning in high-risk areas in collaboration with other government and community-based organizations. As State and local programs shift emphasis from providing direct screening and follow-up services to the core public health functions, grant funds may be used to support and emphasize health department responsibilities in screening and follow-up services of children at risk for lead poisoning. This includes improving coalitions and partnerships, conducting better and more sophisticated assessments, developing and evaluating policies and program performance and effectiveness based on established goals and objectives.

B. Eligible Applicants

Applicant eligibility is divided into Parts A (New Applicants), B (Competing Continuation), and C (Alternative Surveillance Assessment) defined as follows:

1. Part A applies to State and local health departments or other State and local health agencies or departments not currently funded by CDC.

a. Also eligible are agencies or units of local government that serve jurisdictional populations greater than 500,000. In addition, eligible applicants include health departments or other official organizational authority (agency or instrumentality) of the District of Columbia, the Commonwealth of Puerto Rico, any territory or possession of the United States, and all Indian tribes.

b. Applicants for local CLPP program grants from eligible units of local jurisdictions must either apply directly to CDC or apply as part of a statewide grant application. Local jurisdictions cannot submit applications directly to CDC and also apply as part of a statewide grant application.

c. Applicants encouraged to apply under Part A include, but are not limited to; Arkansas, Georgia, Idaho, Kansas, Mississippi, Nevada, North Dakota, South Dakota, Tennessee, and Kentucky.

2. Part B applies to applicants currently funded by Centers for Disease Control and Prevention whose project period is expiring in 1999. Part B applicants are as follows: Colorado; Connecticut; Illinois; Jefferson County, Kentucky; Maryland; Minnesota; Nebraska; New York; Utah; Washington, D.C.; and Wisconsin.

3. Part C applies to: (1) Applicants who apply under Part B, however funding will only be considered if their Part B application is successful and chosen for funding and, (2) applicants currently holding funded CDC Childhood Lead Poisoning Prevention Program and Childhood Blood Lead Surveillance grants that successfully report data to CDC's national surveillance database as of March 31st.

Additional Information for All State Applicants

If a State agency applying for grant funds is other than the official State health department, written concurrence by the State health department must be provided.

C. Availability of Funds

Part A: New Applicants

Up to $3,000,000 will be available in FY 1999 to fund up to 5 new grants. CDC anticipates that awards for the first budget year will range from $75,000 to $800,000.

Part B: Competing Continuations

Up to $7,700,000 will be available in FY 1999 to fund up to 11 competing continuation grants. CDC anticipates that awards for the first budget year will range from $75,000 to $1,500,000.

Part C: Alternative Surveillance Assessments

Up to $400,000 will be available in FY 1999 to fund up to 4 supplemental awards to support the development of alternative surveillance assessments. Alternative surveillance assessment awards are expected to range from $85,000 to $100,000, with the average award being approximately $95,000.

Awards for State Applicants

To determine the suggested level of funding for which an individual State applicant for Part A or Part B is eligible, State applicants should refer to the table entitled ''State CLPPP's Only: Suggested Funding Categories Based on Projected Level of Effort Required to Provide Prevention and Surveillance activities to a State Population'' (included in the application package). Applicants are encouraged to use the funding category that is suggested for the applicant's State; however, note these are suggested funding guidelines and should not be regarded as absolute funding limits.

Awards for Local Applicants

The suggested range of awards for local applicants is $250,000 to $800,000.

Additional Information on Funding for All Applicants for Part A, Part B and Part C

New awards are expected to begin on or about July 1, 1999, and are made for 12-month budget periods within project periods not to exceed 3 years. Estimates outlined above are subject to change based on the actual availability of funds and the scope and quality of applications received. Continuation awards within the project period will be made on the basis of satisfactory progress and availability of funds. Grant awards cannot supplant existing funding for CLPP or Alternative Surveillance programs. Grant funds should be used to enhance the level of expenditures from State, local, and other funding sources. Awards made under Parts A and B will be made with the expectation that program activities will continue when grant funds are terminated.

Note:

1. Grant funds may not be expended for medical care and treatment or for environmental remediation of sources of lead exposure. However, the applicant must provide a plan to ensure that these program activities are carried out.

2. Not more than 10 percent (exclusive of Direct Assistance) of any grant or contract through the grant may be obligated for administrative costs. This 10 percent limitation is in lieu of, and replaces, the indirect cost rate.

D. Program Requirements

Part A and Part B: New and Competing Continuations

The following are requirements for CLPP Programs:

1. A director/manager with authority and responsibility to carry out the requirements of the program and/or a full time coordinator for surveillance activities.

2. Provide qualified staff, other resources, and knowledge to implement the provisions of the program. Applicants requesting grant supported positions must provide assurances that such positions will be authorized to be filled by the applicant's personnel system.

3. For State applicants, develop a statewide surveillance system in accordance with CDC guidance and submit data annually to CDC. Revise, refine, and carry out the proposed surveillance methodology. For local applicants, develop a data-management system that links with the State's surveillance system or develop an automated data-management system to collect and maintain laboratory data on the results of blood lead analyses and data on follow-up care for children with elevated BLLs. For both State and local applicants, use these systems to monitor timeliness and completeness of screening of high-risk children and of follow-up care for children with elevated BLLs.

4. For State applicants, commitment to develop and implement a statewide childhood blood lead screening plan consistent with CDC guidance provided in Screening Young Children for Lead Poisoning: Guidance for State and Local Public Health Officials. For local applicants, commitment to participate in the statewide planning process.

5. Establish effective, well-defined working relationships within public health agencies and with other agencies and organizations at national, State, and community levels (e.g.: Housing authorities; environmental agencies; maternal and child health programs; State Medicaid Early Periodic Screening, Diagnosis, and Treatment (EPSDT) programs; community and migrant health centers; community-based organizations providing health and social services in or near public housing units, as authorized under section 340A of the Public Health Service (PHS) Act; State and local epidemiology programs; State and local housing rehabilitation programs; schools of public health and medical schools; and environmental interest groups).

6. Written assurance that income earned by the CLPP program will be returned to the program for its use.

7. For State CLPP Programs, provide managerial, technical, analytical, and program evaluation assistance to local agencies and organizations in developing or strengthening their CLPP programs.

8. Establish a system to monitor the notification and follow-up of children who are confirmed with elevated BLLs and who are referred for environmental services.

9. SPECIAL REQUIREMENT regarding Medicaid provider-status of applicants: Pursuant to section 317A of the Public Health Service Act (42 U.S.C. 247b–1), as amended by Sec. 303 of the ''Preventive Health Amendments of 1992'' (Pub. L. 102–531), applicants AND current grantees must meet the following requirements: For CLPP program services which are Medicaid-reimbursable in the applicant's State:

a. Applicants who directly provide these services must be enrolled with their state Medicaid agency as Medicaid providers.

b. Providers who enter into agreements with the applicant to provide such services must be enrolled with their state Medicaid agency as providers. An exception to this requirement will be made for providers whose services are provided free of charge and who accept no reimbursement from any third-party payer. Such providers who accept voluntary donations may still be exempted from this requirement.

Part C: Alternative Surveillance Assessments

The following are requirements for Alternative Surveillance Assessments:

1. A coordinator in collaboration with the principal investigator with authority and responsibility to carry out the requirements of the assessment activities.

2. Develop and implement a study protocol to include the following: Methodology, sample selection, field operation, and statistical analysis. Applicants must provide a means of assuring that the results of the study will be published.

3. Revise, refine, and carry out the proposed methodology for conducting Alternative Surveillance Assessments.

4. Monitor and evaluate all aspects of the assessment activities.

5. Conduct and evaluate public health programs or have access to professionals who are knowledgeable in conducting such activities.

E. Application Content

Use the information in the Program Requirements, Other Requirements, and Evaluation Criteria sections to develop the application content. Your application will be evaluated on the criteria listed, so it is important to follow them in laying out your program plan:

1. Applications must be developed in accordance with PHS Form 5161–1.

2. Part B applicants also competing for Part C funds must submit a separate application.

3. Application pages must be clearly numbered, and a complete index to the application and its appendices must be included.

4. The original and two copies of the application set must be submitted UNSTAPLED and UNBOUND. All material must be typewritten, double spaced, printed on one side only, with un-reduced font (10 or 12 point font only) on 8½″ by 11″ paper, and at least 1″ margins and heading and footers. All graphics, maps, overlays, etc., should be in black and white and meet the above criteria.

5. A one-page, single-spaced, typed abstract must be submitted with the application. The heading should include the title of the grant program, project title, organization, name and address, project director, telephone number, facsimile number, and e-mail address.

6. The main body of the CLPP program application must include the following understanding the problem, surveillance or data-management activities, statewide/jurisdiction-wide planning and collaboration, core public health functions, goals and objectives, program management and staffing, and program evaluation. The main body of the alternative surveillance assessments application must include the following study protocol, project personnel, and project management. Each should not exceed 75 pages. The abstract, budget narrative, and budget justification pages are not included in the 75 page limit. Supplemental information may be placed in appendices and should not exceed 25 pages.

7. Part B applicants must submit a progress report no longer than 10 pages.

F. Application

Applicants must submit the original and two copies of the PHS 5161–1 (OMB Number 0937–0189) on or before April 7, 1999. Submit the application to: Mattie B. Jackson, Grants Management Specialist, Grants Management Branch, Procurement and Grants Office Announcement 99033, Centers for Disease Control and Prevention (CDC), 2920 Brandywine Road, MS–E13, Atlanta, GA 30341

Applications shall be considered as meeting the deadline if they are either: (1) Received on or before the deadline date, or (2) sent on or before the deadline date and received in time for submission for the review process. Applicants must request a legibly dated receipt from a commercial carrier or U.S. Postal Service. Private metered postmarks shall not be acceptable as proof of timely mailing.

Applications which do not meet the criteria above are considered late applications. Late applications will not be considered in the current competition and will be returned to the applicant.

G. Evaluation Criteria

The review of applications will be conducted by an independent review committee approved by CDC as they relate to the applicant's response to either Part A, Part B, or Part C. Applications will be reviewed for the quality, strength and completeness of the plan against the following criteria. The maximum rating score of an application is 100 points.

Part A: New Applicants

1. Understanding of the Problem (15 points)

The applicant's description and understanding of the burden and distribution of childhood lead exposure or elevated BLLs in their jurisdiction, using evidence (as available) of incidence and/or prevalence and demographic indicators. Specifically include a description of the prevalence of elevated blood lead levels in the Medicaid population. The extent to which the applicant reflects an understanding of prevention activities, including need, available resources, gaps, and use of this award to address gaps.

2. Surveillance Activity (20 points)

For State Applicants: The applicant's description of plans to develop a childhood blood lead surveillance system that includes tracking lead screening services to children, especially Medicaid children and reports data annually to the CDC's national surveillance database. The clarity, feasibility, and scientific soundness of the surveillance approach. Also, the extent to which the proposed time table for accomplishing each activity and methods for evaluating each activity are appropriate and clearly defined. The following elements will be specifically evaluated:

a. How laboratories report BLLs.

b. How data will be collected and managed.

c. How quality of data and completeness of reporting will be ensured.

d. How and when data will be analyzed.

e. How summary data will be reported and disseminated.

f. Protocols for follow-up of individuals with elevated BLLs.

g. Provisions to obtain denominator data (results of all laboratory blood lead tests, regardless of level).

h. Time line and methods for evaluating Childhood Blood Lead Surveillance (CBLS) approach.

For Local Applicants: The applicant's description of plans to develop a data management system, including the approach to participate in the State CBLS, where applicable. The clarity, feasibility, and scientific soundness of the approach to data management. Also, the extent to which a proposed schedule for accomplishing each activity and method for evaluating each activity are clearly defined and appropriate. The following elements will be specifically evaluated:

a. How laboratory reports will be received.

b. How data will be collected and managed.

c. How quality of data and completeness of reporting will be assured.

d. How and when data will be analyzed.

e. How summary data will be reported and disseminated.

f. Protocols for follow-up of individuals with elevated BLLs.

g. Provisions to obtain denominator data (results of all laboratory blood lead tests, regardless of level).

h. Time line and methods for evaluating data-collection approach.

3. Statewide/Jurisdiction-wide Planning and Collaboration (20 points)

Applicants should describe a planning process to develop statewide/jurisdiction-wide screening recommendations with appropriate local strategies. The following elements will be specifically evaluated:

a. The proposed approach to developing and carrying out an inclusive state- or jurisdiction-wide screening plan as outlined in Screening Young Children for Lead Poisoning: Guidance for State and Local Health Officials.

b. The extent to which the applicant plans to utilize surveillance and program data to produce a statewide/jurisdiction-wide screening recommendation, with specific attention given to the Medicaid population.

c. Description of how collaborations are expected to facilitate the development of a screening plan and strengthen childhood lead poisoning prevention strategies.

d. Evidence of collaboration with principal partners, including managed-care organizations, state Medicaid agency, child health-care providers and provider groups, insurers, community-based organizations, housing agencies, and banking, real-estate, and property-owner interests, must be demonstrated by letters of support, memoranda of understanding, contracts, or other documented evidence of relationships with important collaborators.

4. Capacity To Carry Out Public-health Core Functions (15 points)

The description of the approach and activities necessary to achieve a balance among health-department roles in CLPP, including assessment, program and policy development, and monitoring, evaluating, and ensuring the provision of all necessary components of a comprehensive CLPP. Specifically, include a description of the capacity in place or plans to address:

a. Epidemiologic structure to perform assessment of lead exposure and program response.

c. Health education and communication strategies designed to reach actual and potential collaborators and partners and achieve program goals.

d. Gaps in service provision, where gaps have been demonstrated.

e. Evaluation approaches to examine basic data on CLPP burden and program activities and make course corrections.

5. Goals and Objectives (10 points)

The extent to which the applicant's goals and objectives relate to the six (6) components of a comprehensive CLPP program. Objectives must be relevant, specific, measurable, achievable, and time-framed. There must be a formal work plan with a description of methods, a timetable for accomplishment of each objective, and the evaluation of each proposed objective.

6. Project Management and Staffing (10 points)

The extent to which the applicant has the skills and ability to develop and carry out a comprehensive CLLP program. Specifically the applicant should:

a. Describe the proposed health department staff roles in CLPP, their specific responsibilities, and their level of effort and time. Include a plan to expedite filling of all positions and assure that requested positions have been or will be approved by applicant's personnel system.

b. Describe the plan to provide training and technical assistance to health department personnel and consultation to collaborators outside the health department, including proposed design of information-sharing systems.

7. Program Evaluation (10 points)

The extent to which the applicant proposes to measure the overall impact of health department CLPP activities. Specific criteria should include:

a. The plan for evaluating the impact or outcome of CLPP activities, including evaluation design, methods, and activities.

b. Description of how the project will assess changes in public policy and measure the effectiveness of collaborative activities.

c. Progress made in childhood lead poisoning prevention which resulted from planned health department strategies.

8. Budget Justification (not scored)

Evaluation will be based on the extent to which the budget is reasonable, clearly justified, and consistent with the intended use of funds.

Part B: Competing Continuations

1. Understanding of the Problem (15 points)

The applicant's description and understanding of the burden and distribution of childhood lead exposure or elevated BLLs in the jurisdiction, using evidence of incidence and/or prevalence and demographic indicators. Specifically include a description of the prevalence of elevated blood lead levels in the Medicaid population. The extent to which the applicant reflects an understanding of prevention activities, including need, available resources, gaps, and use of this award to address gaps.

2. Surveillance Activity (20 points)

For State Applicants: The applicant's description of plans to expand their childhood blood lead surveillance system that includes tracking lead screening for Medicaid children, evaluate the existing system, and report data to the CDC's national surveillance database. The clarity, feasibility, and scientific soundness of the surveillance approach. Also, the extent to which the proposed time table for accomplishing each activity are appropriate and clearly defined. The following elements will be specifically evaluated:

a. How laboratories report BLLs.

b. How data will be collected and managed.

c. How quality of data and completeness of reporting will be ensured.

d. How and when data will be analyzed.

e. How summary data will be reported and disseminated.

f. Protocols for follow-up of individuals with elevated BLLs.

g. Provisions to obtain denominator data (results of all laboratory blood lead tests, regardless of level).

h. Time line and methods for evaluating Childhood Blood Lead Surveillance (CBLS) approach.

For local applicants: The applicant's description of plans to expand their data management system, including the approach to participating in the state CBLS, where applicable. The clarity, feasibility, and scientific soundness of the approach to data management. Also, the extent to which the proposed schedule for accomplishing each activity and method for evaluating each activity are clearly defined and appropriate. The following elements will be specifically evaluated:

a. How laboratory reports will be received.

b. How data will be collected and managed.

c. How quality of data and completeness of reporting will be assured.

d. How and when data will be analyzed.

e. How summary data will be reported and disseminated.

f. Protocols for follow-up of individuals with elevated BLLs.

g. Provisions to obtain denominator data (results of all laboratory blood lead tests, regardless of level).

h. Time line and methods for evaluating data-collection approach.

3. Statewide/Jurisdiction-wide Planning and Collaboration (20 points)

Applicants should describe the planning process that has been taken to develop statewide/jurisdiction-wide screening recommendations with appropriate local strategies. The following elements should be specifically evaluated:

a. The approach to developing and carrying out an inclusive state- or jurisdiction-wide screening plan as outlined in Screening Young Children for Lead Poisoning: Guidance for State and Local Health Officials.

b. The extent to which the applicant utilized surveillance and program data to produce statewide/jurisdiction-wide screening recommendations and target the Medicaid population.

c. Description of how collaborations facilitated the development of a screening plan and strengthened childhood lead poisoning prevention strategies.

d. Evidence of collaboration with principal partners, including managed-care organizations, state Medicaid agency, child health-care providers and provider groups, insurers, community-based organizations, housing agencies, and banking, real-estate, and property-owner interests, must be demonstrated by letters of support, memoranda of understanding, contracts, or other documented evidence of relationships with important collaborators.

Note: For applicants under Part B, describe progress in developing and implementing the screening plan based upon each of the elements listed above.

4. Capacity To Carry Out Public-Health Core Functions (15 points)

The description of the approach and activities taken to achieve a balance among health-department roles in CLPP, including assessment, program and policy development, and monitoring, evaluating, and ensuring the provision of all necessary components of a comprehensive CLPP. Specifically include a description of the steps that were taken to develop capacity to address:

a. Epidemiologic structure to perform assessment of lead exposure and program response.

b. Health education and communication strategies designed to reach actual and potential collaborators and partners and achieve program goals.

c. Gaps in service provision where gaps have been demonstrated.

d. Evaluation approaches to examine basic data on CLPP burden and program activities and make course corrections.

5. Goals and Objectives (10 points)

The extent to which the applicant's goals and objectives relate to the six (6) components of a comprehensive CLPP program. Objectives must be relevant, specific, measurable, achievable, and time-framed. There must be a formal work plan with a description of methods and a timetable for accomplishment of each objective.

6. Project Management and Staffing (10 points)

The extent to which the applicant has the skills and ability to develop and carry out a comprehensive CLLP program. Specifically the applicant should:

a. Describe the proposed health department staff roles in CLPP, their specific responsibilities, and their level of effort and time. Include a plan to expedite filling of all positions and assure that requested positions have been or will be approved by the applicant's personnel system.

b. Describe the plan to provide training and technical assistance to health department personnel and consultation to collaborators outside the health department, including proposed design of information-sharing systems.

7. Program Evaluation (10 points)

The extent to which the applicant proposes to measure the overall impact of health department CLPP activities. Specific criteria should include:

a. The plan for evaluating the impact and outcome of CLPP activities,

including the evaluation design, methods, and activities.

b. Description of how the project will assess changes in the effectiveness of collaborative activities.

c. Progress made in childhood lead poisoning prevention which resulted from planned health department strategies.

8. Budget Justification (not scored)

Evaluation will be based on the extent to which the budget is reasonable, clearly justified, and consistent with the intended use of funds.

PART C: Alternative Surveillance Assessments—Factors to be Considered

1. Study Protocol (45 points)

The protocol's scientific soundness (including adequate sample size with power calculations), quality, feasibility, consistency with project goals, and soundness of the evaluation plan (which should provide sufficient detail regarding the way in which the protocol will be implemented). The degree to which the applicant has met the CDC policy requirements regarding the inclusion of women, ethnic, and racial groups in the proposed project. This includes: (a) The proposed plan to include of both sexes and racial and ethnic minority populations for appropriate representation; (b) the proposed justification when representation is limited or absent; (c) a statement as to whether the design of the study is adequate to measure differences when warranted; and (d) a statement as to whether the plans for recruitment and outreach for study participants includes establishing partnerships with community-based agencies and organizations. Benefits of the partnerships should be described.

2. Project Personnel (20 points)

The qualifications, experience (including experience in conducting relevant studies), and time commitment of the staff needed to carry out the study.

3. Project Management (35 points)

The schedule for implementing and monitoring the proposed study also should be provided. The extent to which the application documents specific, attainable, and realistic goals and objectives, and describes the evaluation plan.

4. Budget Justification (not scored)

The extent to which the budget is reasonable, clearly justified, and consistent with the intended use of cooperative agreement funds.

5. Human Subjects (not scored)

The extent to which the applicant complies with the Department of Health and Human Services regulations (45 CFR part 46) on the protection of human subjects.

H. Other Requirements

Technical Reporting Requirements

Provide CDC with the original plus two copies of:

1. Quarterly progress reports which are required of all grantees. The quarterly report should not exceed 25 pages. Time lines for the quarterly reports will be established at the time of award, but are typically due 30 days after the end of each quarter.

2. Calendar year surveillance data should be reported annually to CDC in the approved OMB format. Time lines for the annual report will be established at the time of award, however are typically due 90 days after the end of the year. Also submit a written surveillance report annually to CDC.

3. Financial Status Reports, are due within 90 days of the end of the budget period.

4. Final financial reports and performance reports are due within 90 days after the end of the project period. Send all reports to: Mattie B. Jackson, Grants Management Specialist, Grants Management Branch, Procurement and Grants Office, Centers for Disease Control and Prevention (CDC), 2920 Brandywine Road, Mailstop E–13, Atlanta, GA 30341

5. Data collection initiated under this cooperative agreement program has been approved by the Office of Management and Budget under OMB number (0920–0337), ''National Childhood Blood Lead Surveillance System'', Expiration Date: March 31, 2000.

The following additional requirements are applicable to this program. For a complete description of each, see Addendum 1 in the application kit.

AR–1 Human Subjects Requirement
AR–2 Requirements for Inclusion of Women and Racial and Ethnic Minorities in Research
AR–7 Executive Order 12372 Review
AR–9 Paperwork Reduction Act Requirements
AR–10 Smoke-Free Workplace Requirements
AR–11 Healthy People 2000
AR–12 Lobbying Restrictions

I. Authority

This program is authorized under sections 301(a), 317A and 317B of the Public Health Service Act (42 U.S.C. 247(a), 247b–1, and 247b–3), as amended. Program regulations are set forth in Title 42, Code of Federal Regulations, part 51b. The Catalog of Federal Domestic Assistance number is 93.197.

J. Pre-Application Workshop for New and Competing Continuation Applicants

1. A pre-application technical assistance workshop will be held to assist all prospective applicants in understanding CDC application requirements and program priorities. During the workshop, information will be presented on application and business management requirements, programmatic priorities, and other essential information for preparing applications.

2. The workshop will be held Sunday, January 31, 1999 from, 2 p.m. to 5 p.m., prior to the annual CDC supported grantee meeting. Applicants interested in attending the workshop should make reservations at the Holiday Inn SunSpree Conference Center, Clearwater Beach, Florida, by calling 727–447–9566.

In addition, for interested applicants, a telephone conference call for pre-application technical assistance will be held on Wednesday, February 17, 1999, from 1:30 p.m. to 3:30 p.m, Eastern Standard Time. The bridge number for the conference call is 1-800–311–3437, and the pass code is 669241. For further information about all workshops, please contact Claudette Grant-Joseph at 770–488–7330.

K. Where To Obtain Additional Information

To receive additional written information, call 1–888–472-6874. You will be asked to leave your name, address, and phone number and will need to refer to Announcement 99033. You will receive a complete program description, information on application procedures, and application forms. CDC will not send application kits by facsimile or express mail. If you have questions after reviewing the contents of all documents, business management technical assistance may be obtained from:

Mattie B. Jackson, Grants Management Specialist, Grants Management Branch, Procurement and Grants Office, Centers for Disease Control and Prevention (CDC), 2920 Brandywine Road, Mailstop E–13, Atlanta, GA 30341, telephone (404) 842–6564

Internet address mij3.@cdc.gov

This and other CDC announcements are also available through the CDC

homepage on the Internet. The address for the CDC homepage is http://www.cdc.gov.

For programmatic technical assistance, contact:

Claudette A. Grant-Joseph, Chief, Program Services Section, Lead Poisoning Prevention Branch, Division of Environmental Hazards and Health Effects, National Center for Environmental Health, Centers for Disease Control and Prevention (CDC), 4770 Buford Highway, NE, Mailstop F–42, Atlanta, GA 30341–3724, telephone (770) 488–7330, Internet address cag4@cdc.gov

Dated: February 2, 1999.

John L. Williams,

Director, Procurement and Grants Office, Centers for Disease Control and Prevention (CDC).

[FR Doc. 99–2905 Filed 2–5–99; 8:45 am]

BILLING CODE 4160–18–U

DEPARTMENT OF HEALTH AND HUMAN SERVICES

Centers for Disease Control and Prevention

Injury Research Grant Review Committee: Conference Call Meeting

In accordance with section 10(a)(2) of the Federal Advisory Committee Act (Pub. L. 92–463), the Centers for Disease Control and Prevention (CDC) announces the following conference call committee meeting.

Name: Injury Research Grant Review Committee (IRGRC).

Time and Date: 1:30 p.m.–3:30 p.m., February 24, 1999.

Place: National Center for Injury Prevention and Control (NCIPC), CDC, Koger Center, Vanderbilt Building, 1st Floor, Conference Room 1006, 2939 Flowers Road, South, Atlanta, Georgia 30341. (Exit Chamblee-Tucker Road off I–85.)

Status: Open: 1:30 p.m.–1:45 p.m., February 24, 1999. Closed: 1:45 p.m.–3:30 p.m., February 24, 1999.

Purpose: This committee is charged with advising the Secretary of Health and Human Services, the Assistant Secretary for Health, and the Director, CDC, regarding the scientific merit and technical feasibility of grant applications received from academic institutions and other public and private profit and nonprofit organizations, including State and local government agencies, to conduct specific injury research that focus on prevention and control and to support injury prevention research centers.

Matters to be Discussed: Agenda items include announcements; discussion of review procedures; future meeting dates; and review of grant applications.

Beginning at 1:45 p.m., through 3:30 p.m., February 24, the Committee will meet to conduct a review of grant applications. This portion of the meeting will be closed to the public in accordance with provisions set forth in section 552b(c)(4) and (6), title 5 U.S.C., and the Determination of the Associate Director for Management and Operations, CDC, pursuant to Pub. L. 92–463.

Agenda items are subject to change as priorities dictate.

Contact Person For More Information: John F. Finklea, M.D., Acting Executive Secretary, IRGRC, NCIPC, CDC, 4770 Buford Highway, NE, M/S K58, Atlanta, Georgia 30341–3724. Telephone 770/488–4330.

The Director, Management Analysis and Services office has been delegated the authority to sign **Federal Register** notices pertaining to announcements of meetings and other committee management activities, for both the Centers for Disease Control and Prevention and the Agency for Toxic Substances and Disease Registry.

Dated: February 2, 1999.

John C. Burckhardt,

Acting Director, Management Analysis and Services Office, Centers for Disease Control and Prevention (CDC).

[FR Doc. 99–2900 Filed 2–5–99; 8:45 am]

BILLING CODE 4163–18–P

DEPARTMENT OF HEALTH AND HUMAN SERVICES

Administration for Children and Families

Child Welfare Demonstrations Pursuant to Section 1130 of the Social Security Act (the Act); Parts B and E of title IV of the Act; Public Law 103–432 and Public Law 105–89

AGENCY: Administration on Children, Youth and Families, ACF, DHHS.

ACTION: Public notice.

SUMMARY: This public notice announces that the Department of Health and Human Services (Department) is seeking proposals on child welfare demonstration projects and has published Information Memorandum ACYF–CB–IM–99–03 dated 1–21–99, January 21, 1999, entitled Child Welfare Demonstration Projects. This memorandum informs interested parties of: (1) The principles, goals and objectives the Department will consider in exercising its discretion to approve or disapprove demonstration projects which would require waivers of certain sections of the Act under the authority in section 1130 (b) (of Part A of title XI) of the Social Security Act (the Act), added by Pub. L. 103–432 and amended by Pub. L. 105–89; (2) the procedures the Department expects the States to employ in involving the public in the development of proposed demonstration projects under section 1130; and (3) the procedures the Department will follow in receiving and reviewing the demonstration proposals.

The Information Memorandum: (1) Contains guidelines and procedures for submitting a proposal; and (2) identifies limitations on demonstration projects and provisions of titles IV–B and IV–E of the Act that are not subject to waiver. The Department will give preference to proposals that test policy and service program alternatives that are unique in their approach to serving children and families, that differ significantly from other approved child welfare demonstrations, and that are from States that have not previously been approved for a Child Welfare Demonstration project. The Department will give first consideration to proposals that reflect the topical priorities outlined in Appendix I of the Information Memorandum.

FOR FURTHER INFORMATION CONTACT: Copies of the Information Memorandum containing the guidelines, and topical priorities can be found at the ACF Website at: http://www.acf.dhhs.gov/programs/cb/demonstrations or may be obtained from the National Clearinghouse on Child Abuse and Neglect Information, 330 C Street, SW, Washington, DC 20447, (800) 394–3366, INTERNET address: nccanch@calib.com. For further information, contact the Children's Bureau, Administration on Children, Youth and Families, DHHS at (202) 205–8618.

DATES: Proposals for a Child Welfare Demonstration project will be accepted at any time. States that are interested in a project to be considered for approval in fiscal year 1999 are strongly encouraged to submit a Letter of Intent before April 5, 1999.

ADDRESSES: All Letters of Intent and complete proposals should be submitted to Laura Oliven, Children's Bureau, Administration on Children, Youth and Families, 330 C Street, SW, Room 2068, Washington, DC 20447. Facsimile transmission of a Letter of Intent ONLY will be accepted providing it is followed by an original copy. The FAX number is (202) 260–9345.

SUPPLEMENTARY INFORMATION: This announcement and the Information Memorandum Number ACYF–CB–IM–99–03 do not create any right or benefit, substantive or procedural, enforceable at law or equity, by any person, or entity, against the United States, its agencies or instrumentalities, the States, or any other person.

Dated: February 1, 1999.

Patricia Montoya,

Commissioner, Administration on Children, Youth and Families.

[FR Doc. 99–3006 Filed 2–5–99; 8:45 am]

BILLING CODE 4184–01–P

DEPARTMENT OF HEALTH AND HUMAN SERVICES

Food and Drug Administration

[Docket No. 99F–0187]

Monsanto Co.: Filing of Food Additive Petition

AGENCY: Food and Drug Administration, HHS.

ACTION: Notice.

SUMMARY: The Food and Drug Administration (FDA) is announcing that Monsanto Co. has filed a petition proposing that the food additive regulations be amended to provide for the safe use of L-Phenylalanine, *N*-[*N*-(3,3-dimethylbutyl)-*L*-α-aspartyl]-,1-methyl ester as a general use sweetener. Monsanto proposes that this additive be identified as neotame.

DATES: Written comments on the petitioner's environmental assessment by April 10, 1999.

ADDRESSES: Submit written comments to the Dockets Management Branch (HFA–305), Food and Drug Administration, 5630 Fishers Lane, rm. 1061, Rockville, MD 20852.

FOR FURTHER INFORMATION CONTACT: Blondell Anderson, Center for Food Safety and Applied Nutrition (HFS–206), Food and Drug Administration, 200 C St. SW., Washington, DC 20204, 202–418–3106.

SUPPLEMENTARY INFORMATION: Under the Federal Food, Drug, and Cosmetic Act (sec. 409(b)(5) (21 U.S.C. 348(b)(5))), notice is given that a food additive petition (FAP 9A4643) has been filed by Monsanto Co., 5200 Old Orchard Rd., Skokie, IL 60077. The petition proposes to amend the food additive regulations in part 172 *Food Additives Permitted for Direct Addition to Food for Human Consumption* to provide for the safe use of *N*-[*N*-(3,3-dimethylbutyl)-*L*-α-aspartyl]-*L*-phenylalanine 1-methyl ester as a general use sweetener. Monsanto proposes the sweetener be identified as neotame.

The potential environmental impact of this action is being reviewed. To encourage public participation consistent with regulations promulgated under the National Environmental Policy Act (40 CFR 1501.4(b)), the agency is placing the environmental assessment submitted with the petition that is the subject of this notice on display at the Dockets Management Branch (address above) for public review and comment. Interested persons may, on or before April 10, 1999, submit to the Dockets Management Branch (address above) written comments. Two copies of any comments are to be submitted, except that individuals may submit one copy. Comments are to be identified with the docket number found in brackets in the heading of this document. Received comments may be seen in the office above between 9 a.m. and 4 p.m., Monday through Friday. FDA will also place on public display any amendments to, or comments on, the petitioner's environmental assessment without further announcement in the **Federal Register**. If, based on its review, the agency finds that an environmental impact statement is not required and this petition results in a regulation, the notice of availability of the agency's finding of no significant impact and the evidence supporting that finding will be published with the regulation in the **Federal Register** in accordance with 21 CFR 25.40(c).

Dated: January 28, 1999.

Laura M. Tarantino,

Acting Director, Office of Premarket Approval, Center for Food Safety and Applied Nutrition.

[FR Doc. 99–2851 Filed 2–5–99; 8:45 am]

BILLING CODE 4160–01–F

DEPARTMENT OF HEALTH AND HUMAN SERVICES

Food and Drug Administration

Endocrinologic and Metabolic Drugs Advisory Committee; Notice of Meeting

AGENCY: Food and Drug Administration, HHS.

ACTION: Notice.

This notice announces a forthcoming meeting of a public advisory committee of the Food and Drug Administration (FDA). The meeting is open to the public.

Name of Committee: Endocrinologic and Metabolic Drugs Advisory Committee.

General Function of the Committee: To provide advice and recommendations to the agency on FDA's regulatory issues.

Date and Time: The meeting will be held on March 26, 1999, 8 a.m. to 5 p.m.

Location: Holiday Inn, Versailles Ballrooms I and II, 8120 Wisconsin Ave., Bethesda, MD.

Contact Person: Kathleen R. Reedy or LaNise S. Giles, Center for Drug Evaluation and Research (HFD–21), Food and Drug Administration, 5600 Fishers Lane, Rockville, MD 20857, 301–827–7001, or FDA Advisory Committee Information Line, 1–800–741–8138 (301–443–0572 in the Washington, DC area), code 12536. Please call the Information Line for up-to-date information on this meeting.

Agenda: The committee will discuss experience since approval for marketing, benefits, and risks of Rezulin™ (troglitazone, Parke-Davis Pharmaceutical Research, a Division of Warner-Lambert) in the treatment of type 2 diabetes mellitus.

Procedure: Interested persons may present data, information, or views, orally or in writing, on issues pending before the committee. Written submissions may be made to the contact person by March 23, 1999. Oral presentations from the public will be scheduled between approximately 8:30 a.m. and 9:30 a.m. Time allotted for each presentation may be limited. Those desiring to make formal oral presentations should notify the contact person before March 23, 1999, and submit a brief statement of the general nature of the evidence or arguments they wish to present, the names and addresses of proposed participants, and an indication of the approximate time requested to make their presentation. In addition, an open public session will be conducted after the scientific presentations.

Notice of this meeting is given under the Federal Advisory Committee Act (5 U.S.C. app. 2).

Dated: January 26, 1999.

Michael A. Friedman,

Deputy Commissioner for Operations.

[FR Doc. 99–2852 Filed 2–5–99; 8:45 am]

BILLING CODE 4160–01–F

DEPARTMENT OF HEALTH AND HUMAN SERVICES

Food and Drug Administration

[Docket No. 98D–1165]

Draft Guidance for the Content of Premarket Notifications (510(k)'s) for Extracorporeal Shock Wave Lithotripters Indicated for the Fragmentation of Kidney and Ureteral Calculi; Availability

AGENCY: Food and Drug Administration, HHS.

ACTION: Notice.

SUMMARY: The Food and Drug Administration (FDA) is announcing the availability of the draft guidance entitled ''Guidance for the Content of

Premarket Notifications (510(k)s) for Extracorporeal Shock Wave Lithotripters Indicated for the Fragmentation of Kidney and Ureteral Calculi.'' This guidance is neither final nor is it in effect at this time. This draft guidance describes the types of information that should be submitted in a premarket notification to support a decision of substantial equivalence for an extracorporeal shock wave lithotripter indicated for the fragmentation of kidney and ureteral calculi, including potential special controls. Although renal and ureteral extracorporeal shock wave lithotripters are currently classified into class III (premarket approval), elsewhere in this issue of the **Federal Register**, FDA is publishing a proposed rule to reclassify these devices to class II (special controls). It is anticipated that this draft guidance will become effective if/when a final rule regarding this reclassification has been issued.

DATES: Written comments concerning this draft guidance must be received by May 10, 1999.

ADDRESSES: See the **SUPPLEMENTARY INFORMATION** section for information on electronic access to the draft guidance. Submit written requests for single copies on a 3.5'' diskette of the draft guidance document entitled ''Guidance for the Content of Premarket Notifications (510(k)s) for Extracorporeal Shock Wave Lithotripters Indicated for the Fragmentation of Kidney and Ureteral Calculi'' to the Division of Small Manufacturers Assistance (HFZ–220), Center for Devices and Radiological Health, Food and Drug Administration, 1350 Piccard Dr., Rockville, MD 20850. Send two self-addressed adhesive labels to assist that office in processing your request, or fax your request to 301–443–8818.

Written comments concerning this draft guidance must be submitted to the Dockets Management Branch, (HFA–305), Food and Drug Administration, rm. 1061, 5630 Fishers Lane, Rockville, MD 20852. Comments should be identified with the docket number found in brackets in the heading of this document.

FOR FURTHER INFORMATION CONTACT: John H. Baxley, Center for Devices and Radiological Health (HFZ–470), Food and Drug Administration, 9200 Corporate Blvd., Rockville, MD 20850, 301–594–2194.

SUPPLEMENTARY INFORMATION:

I. Background

Extracorporeal shock wave lithotripters for the fragmentation of kidney and ureteral calculi are currently postamendments class III devices, requiring either an approved premarket approval (PMA) application or declared complete product development protocol (PDP) prior to commercial distribution in the United States. Elsewhere in this issue of the **Federal Register**, FDA is publishing a proposed rule to reclassify extracorporeal shock wave lithotripters from class III into class II (special controls). To facilitate the proposed reclassification, FDA has prepared the draft guidance entitled ''Guidance for the Content of Premarket Notifications (510(k)s) for Extracorporeal Shock Wave Lithotripters Indicated for the Fragmentation of Kidney and Ureteral Calculi.'' This draft guidance describes the special controls that FDA is including in the proposed rule, and it also provides general guidance to industry on the content of premarket notifications for these devices.

A meeting of the Gastroenterology and Urology Devices Advisory Panel of the Medical Devices Advisory Committee was held on July 30, 1998, to seek its recommendations on this proposed reclassification, including advice on special controls and the content of premarket notifications. The panel unanimously voted to reclassify the extracorporeal shock wave lithotripter for the fragmentation of renal and ureteral stones into class II. Comments from the panel have been incorporated into this draft guidance document.

II. Significance of Guidance

This draft guidance document represents the agency's current thinking on the reclassification of extracorporeal shock wave lithotripters indicated for the fragmentation of kidney and ureteral calculi. It does not create or confer any rights for or on any person and does not operate to bind FDA or the public. An alternative approach may be used if such approach satisfies the applicable statute, regulations, or both.

The agency has adopted Good Guidance Practices (GGP's), which set forth the agency's policies and procedures for the development, issuance, and use of guidance documents (62 FR 8961, February 27, 1997). This draft guidance document is issued as a Level 1 guidance consistent with GGP's.

III. Electronic Access

In order to receive ''Guidance for the Content of Premarket Notifications (510(k)s) for Extracorporeal Shock Wave Lithotripters Indicated for the Fragmentation of Kidney and Ureteral Calculi'' via your fax machine, call the CDRH Facts-On-Demand (FOD) system at 800–899–0381 or 301–827–0111 from a touch-tone telephone. At the first voice prompt press 1 to access DSMA Facts, at second voice prompt press 2, and then enter the document number (1226) followed by the pound sign (#). Then follow the remaining voice prompts to complete your request.

Persons interested in obtaining a copy of the draft guidance may also do so using the World Wide Web (WWW). CDRH maintains an entry on the WWW for easy access to information including text, graphics, and files that may be downloaded to a personal computer with access to the WWW. Updated on a regular basis, the CDRH home page includes ''Guidance for the Content of Premarket Notifications (510(k)s) for Extracorporeal Shock Wave Lithotripters Indicated for the Fragmentation of Kidney and Ureteral Calculi,'' device safety alerts, **Federal Register** reprints, information on premarket submissions (including lists of approved applications and manufacturers' addresses), small manufacturers' assistance, information on video conferencing and electronic submissions, mammography matters, and other device-oriented information.

IV. Comments

Interested persons may, on or before May 10, 1999, submit to Dockets Management Branch (address above) written comments regarding this draft guidance. Two copies of any comments are to be submitted, except that individuals may submit one copy. Comments are to be identified with the docket number found in brackets in the heading of this document. The guidance document and received comments may be seen in the Dockets Management Branch between 9 a.m. and 4 p.m., Monday through Friday.

Dated: January 21, 1999.

Linda S. Kahn,

Deputy Director for Regulations Policy, Center for Devices and Radiological Health.

[FR Doc. 99–2690 Filed 2–5–99; 8:45 am]

BILLING CODE 4160–01–F

DEPARTMENT OF HEALTH AND HUMAN SERVICES

Health Care Financing Administration

[HCFA–2014–N]

RIN 0938–AI64

State Children's Health Insurance Program; Reserved Allotments to States for Fiscal Year 1999 and Revised Reserved Allotments to States for Fiscal Year 1998

AGENCY: Health Care Financing Administration (HCFA), HHS.

ACTION: Notice.

SUMMARY: This notice provides notification of the reserved fiscal year (FY) 1999 State allotments available to provide Federal funding to individual States, Commonwealths, and Territories for expenditures in the new State Children's Health Insurance Program (CHIP) established under title XXI of the Social Security Act (the Act). This notice also provides revised reserved State CHIP FY 1998 allotments, which were originally published in the **Federal Register** on September 12, 1997. The notice describes the methodology and process that HCFA uses to determine the reserved State CHIP allotments in accordance with section 2104 of the Act. These reserved State CHIP allotments are estimates of States' FY 1998 and FY 1999 title XXI allotments, assuming that each State were to submit, and receive approval for, a State child health plan. Under title XXI the amount of State's allotments for a fiscal year is available for 3 years for States with approved child health plans.

Established by section 4901 of the Balanced Budget Act of 1997 (Pub. L. 105–33), the State Children's Health Insurance Program provides Federal matching funds to States to initiate and expand health insurance coverage to uninsured, low-income children.

Copies: To order copies of the **Federal Register** containing this document, send your request to: New Orders, Superintendent of Documents, P.O. Box 37194, Pittsburgh, PA 15250–7954. Specify the date of the issue requested and enclose a check or money order payable to the Superintendent of Documents, or enclose your Visa or Master Card number and expiration date. Credit card orders can also be placed by calling the order desk at (202) 512–1800 or by faxing to (202) 512–2250. The cost for each copy is $8.00. As an alternative, you can view and photocopy the **Federal Register** document at most libraries designated as Federal Depository Libraries and at many other public and academic libraries throughout the country that receive the **Federal Register**.

This **Federal Register** document is also available from the **Federal Register** online database through GPO Access, a service of the U.S. Government Printing Office. Free public access is available on a Wide Area Information Server (WAIS) through the Internet and via asynchronous dial-in. Internet users can access the database by using the World Wide Web; the Superintendent of Documents home page address is http://www.access.gpo.gov/su_docs/, by using local WAIS client software, or by telnet to swais.access.gpo.gov, then login as guest (no password required). Dial-in users should use communications software and modem to call (202) 512–1661; type swais, then login as guest (no password required).

FOR FURTHER INFORMATION CONTACT: Richard Strauss, (410) 786–2019.

SUPPLEMENTARY INFORMATION:

I. General Background on New Legislation

Section 4901 of the Balanced Budget Act of 1997 (BBA), Pub. L. 105–33, as amended by Pub. L. 105–100, added title XXI to the Social Security Act (the Act), which was further amended by Pub. L. 105–174. Title XXI authorized a new State Children's Health Insurance Program (CHIP) to assist State efforts to initiate and expand child health assistance to uninsured, low-income children. Child health assistance is provided primarily for obtaining health benefits coverage through (1) obtaining coverage that meets requirements specified in the law under section 2103 of the Act; or (2) expanding coverage under the State's Medicaid plan under title XIX of the Act; or (3) a combination of both.

In order to be eligible for Federal matching funds under the CHIP, States must submit to the Secretary, and receive approval for, a State child health plan that describes how the State intends to use the funds provided under title XXI. The plan must meet certain criteria specified in the statute, which include benefit packages, eligibility standards and methodologies, coverage requirements, basic and additional services offered, strategic objectives and performance goals, plan administration, and evaluations.

The law limits the total amount of Federal funds for the State Children's Health Insurance Program and specifies the formula that is to be used to determine an allotment for each State from this total amount, as described under section III of this notice.

II. Purpose of This Notice

We are issuing this notice to provide notification to States, Commonwealths, and Territories of the reserved allotments that will be available to them for FY 1999, and also to provide notification of revised State CHIP reserved allotments for FY 1998 (that were originally published in the **Federal Register** on September 12, 1997), for child health insurance expenditures if they have an approved State child health plan under title XXI of the Act, or to claim an enhanced Federal medical assistance percentage (FMAP) rate for certain CHIP-related Medicaid expenditures under title XIX of the Act. States, Commonwealths, and Territories may submit State child health plans to HCFA for approval, to be effective as early as October 1, 1997. We believe that this notification at the beginning of a fiscal year is necessary to enable States, Commonwealths, and Territories to conduct advance planning and budgeting for title XXI and CHIP-related title XIX programs.

Section 2104(b) of the Act indicates that ''the Secretary shall allot to each State * * * with a State child health plan approved under this title.'' This language requires States to have an approved State child health plan for the fiscal year in order for the Secretary to provide an allotment to that State for that fiscal year. If a State does not have an approved State child health plan for that fiscal year, the amount of that State's reserved allotment could be unavailable to that State and could be allotted to States with approved child health plans.

Pub. L. 105–174, enacted on May 1, 1998, provides that for purposes of the calculation of allotments, a State child health plan approved by HCFA on or after October 1, 1998, and before October 1, 1999, must be treated as having been approved for both FY 1998 and FY 1999. However, a State's allotment for a fiscal year may only be used for CHIP and CHIP-related Medicaid expenditures that are allowable under the approved State child health plan or the Medicaid State plan. Federal financial participation (FFP) would not be available for expenditures made in and claimed for periods before the effective date of the approved State child health plan or the Medicaid State plan.

The reserved allotments for FY 1998 and FY 1999 in this notice were determined by application of the formula specified in title XXI of the Act and described in detail in section III of this notice. Section 707 of the Act Making Appropriations for the

Departments of Labor, Health and Human Services and Education, and Related Agencies for the Fiscal Year ending September 30, 1999, and For Other Purposes (''1999 Appropriations Act''), as enacted by section 101(f) of Pub. L. 105–277, requires that the FY 1999 reserved State CHIP allotments be determined using the same data used in determining the revised FY 1998 State CHIP allotments. The effect of this statutory change is to distribute the total funds available for FY 1999 among the 50 States and the District of Columbia in the same proportions as the total funds were distributed for FY 1998. However, because the total funds available nationally for allotment to the States and the District of Columbia for FY 1999 is $19,950,000 million lower than the total funds available nationally for FY 1998, the actual FY 1999 reserved allotments for each State and the District of Columbia is slightly lower than each State's FY 1998 reserved allotment. Final allotments for each State will be determined in accordance with statutory requirements. We plan to issue a notice of proposed rulemaking as soon as possible on the requirements for the allotment and payment process under title XXI. Although final allotments have not been determined, under section 2105(e) of the Act, we have authority to make ongoing payments based on advance estimates of allowable expenditures. At this time, we intend to make advance payments to States with approved child health plans based on these reserved allotments. Issues related to the allotment and payment process, however, will be open for public comment as part of the rulemaking process.

III. Methodology for Determining Reserved Allotments for States, Commonwealths, and Territories

This notice specifies in Tables I and II under section IV the revised reserved FY 1998 allotments, and the reserved FY 1999 allotments, respectively, that would be available to individual States, Commonwealths, and Territories for child health assistance expenditures under approved State child health plans, assuming that each State, Commonwealth, or Territory qualifies for such an allotment. The reserved FY 1998 allotments were originally published in the **Federal Register** on September 12, 1997. As discussed below, the FY 1998 reserved allotments have been recalculated to reflect the way the Bureau of the Census compiles reported data on the number of low-income children in each State who have no health insurance in the March supplements to the Current Population Survey (CPS), and to incorporate an increase in the title XXI appropriation, applicable only to FY 1998, as enacted by Pub. L. 105–100 on November 19, 1997.

In accordance with section 707 of the 1999 Appropriations Act, as enacted by section 101(f) of Pub. L. 105–277, the FY 1999 allotments contained in this notice were determined using the same data that were used in determining the revised reserved FY 1998 State CHIP allotments.

We have applied the statutory formula specified in section 2104 of the Act in determining the reserved allotments for FY 1998 and FY 1999, as discussed below.

Section 2104(a) of title XXI provides that, for purposes of providing allotments to the 50 States and the District of Columbia, the following amounts are appropriated: $4.295 billion for FY 1998; $4.275 billion for each FY 1999 through 2001; $3.150 billion for each FY 2002 through 2004; $4.050 billion for each FY 2005 through 2006 and $5 billion for FY 2007. However, under section 2104(c) of the Act, 0.25 percent of the total amount appropriated each year is available for allotment to the Territories and Commonwealths of Puerto Rico, Guam, the Virgin Islands, American Samoa, and the Northern Mariana Islands. Furthermore, for FY 1999, an additional $32 million was appropriated for allotment only to the Territories and Commonwealths under section 706 of the 1999 Appropriations Act, as enacted by section 101(f) of Pub. L. 105–277. This newly appropriated $32 million for the Commonwealths and Territories for FY 1999 does not reduce the previous FY 1999 CHIP appropriation ($4.275 billion) and is in addition to 0.25 percent of the total annual appropriated discussed above. The total amounts are allotted to the Commonwealths and the Territories according to the following percentages: Puerto Rico, 91.6 percent; Guam, 3.5 percent; the Virgin Islands, 2.6 percent; American Samoa, 1.2 percent; and the Northern Mariana Islands, 1.1 percent.

Further, under sections 4921 and 4922 of Public Law 105–33, the total allotment available to the 50 States and the District of Columbia is reduced by an additional total of $60,000,000; $30,000,000 each for a special diabetes research program for Type I diabetes and special diabetes programs for Indians. The diabetes programs are funded from FYs 1998 through 2002 only.

Therefore, the total amount of the allotment available for the 50 States and the District of Columbia for FY 1998 and FY 1999 was determined in accordance with the following formula:

$$A_{TA} = S_{2104(a)} - T_{2104(c)} - D_{4921} - D_{4922}$$

A_{TA} = Total amount available for allotment to the 50 States and the District of Columbia for the fiscal year.

$S_{2104(a)}$ = Total appropriation for the fiscal year indicated in section 2104(a)of the Act. For FY 1998, this is $4,295,000,000. For FY 1999, this is $4,275,000,000.

$T_{2104(c)}$ = Total amount available for allotment for the Commonwealths and Territories; determined under section 2104(c) of the Act as 0.25 percent of the total appropriation for the 50 States and the District of Columbia.

For FY 1998, this is:

$$.0025 \times \$4,295,000,000 = \$10,737,500$$

For FY 1999, this is:

$$.0025 \times \$4,275,000,000 = \$10,687,500$$

D_{4921} = Amount of grant for research regarding Type I Diabetes under section 4921 of Pub. L. 105–33. This is $30,000,000 for FYs 1998 through 2002.

D_{4922} = Amount of grant for diabetes programs for Indians under section 4922 of Pub. L. 105–33. This is $30,000,000 for FYs 1998 through 2002.

For FY 1998, the total amount available for allotment to the 50 States and the District of Columbia is $4,224,262,500. This was determined as follows:

$$A_{TA}(\$4,224,262,500) = S_{2104(a)}(\$4,295,000,000) - T_{2104(c)}(\$10,737,500) - D_{4921}(\$30,000,000) - D_{4922}(\$30,000,000)$$

For FY 1999, the total amount available for allotment to the 50 States and the District of Columbia is $4,204,312,500. This was determined as follows:

$$A_{TA}(\$4,204,312,500) = S_{2104(a)}(\$4,275,000,000) - T_{2104(c)}(\$10,687,500) - D_{4921}(\$30,000,000) - D_{4922}(\$30,000,000)$$

The total amount available for allotment to the 50 States and the District of Columbia is allotted to each State with a child health plan approved under title XXI based on the formula indicated at section 2104(b)(1) of the Act. The fiscal year allotment for each State with an approved child health plan is determined on the basis of the product of two factors, the Number of Children and the State Cost Factor, for each State divided by the sum of these products over all States.

For FYs 1998 through 2000, the first factor, the Number of Children, is based

only on the total number of low-income, uninsured children in the State with FY 1999 being the only exception, as discussed above. For FY 2001 only, the Number of Children is calculated as the sum of 75 percent of the low-income, uninsured children in the State, and 25 percent of the number of low-income children in the State. For FY 2002 and succeeding years through FY 2007, the Number of Children is calculated as the sum of 50 percent of the low-income, uninsured children in the State, and 50 percent of the number of low-income in the State.

The Number of Children for each State is developed by the Bureau of the Census based on the standard methodology used to determine official poverty status and uninsured status in their annual CPS on these topics. As part of a continuing formal process between HCFA and the Bureau of the Census, each fiscal year HCFA obtains the Number of Children data officially from the Bureau of the Census.

In determining the FY 1998 reserved allotments, as were originally published in the **Federal Register** on September 12, 1997, the Number of Children for each State (provided in thousands) was determined and provided by the Bureau of the Census based on the arithmetic average of the number of low-income children and low-income children with no health insurance as calculated from the three most recent March supplements to the CPS before the beginning of FY 1998. That is, we used the most recent official data that were available from the Bureau of the Census and Bureau of Labor Statistics, respectively, before September 1, 1997 (that is, through August 31, 1997).

In particular, through August 31, 1997, the only official data available from the Bureau of the Census on the numbers of children were data from the 3 March CPSs conducted in March 1994, 1995, and 1996 that reflected data for the 3 calendar years 1993, 1994, and 1995. In calculating the FY 1998 reserved allotments, we did not use the Bureau of the Census data from the March 1997 CPS because those data were not official and available until a later date, after September 1, 1997. If we waited for the official data available from the Bureau of the Census through September 30, 1997, we would have had to delay publication of the FY 1998 reserved CHIP allotments until after the beginning of FY 1998. Since this was a new program, we believed that for the first year States needed to be able to plan in advance.

HCFA did not modify or adjust the Bureau of Census compilation of CPS data on the number of children. However, HCFA is incorporating a correction made by the Bureau of Census to more accurately reflect underlying reported CPS data. The Bureau of Census recognized that the data collected and reported on the numbers of children in the March Supplements to the CPS were not accurately reflected in the compilation provided to HCFA for the September 12, 1997, calculation of the FY 1998 reserved allotments. In particular, children who had access to services through the Indian Health Service (IHS), but no other health insurance coverage, were identified in the compiled number of children as having health insurance coverage. The Bureau of Census has adjusted the compiled numbers of children to reflect the fact that the data shows that these children do not actually have health insurance coverage. In light of this adjustment to more accurately reflect reported CPS data, we have recalculated and are republishing in this notice the FY 1998 reserved allotments. This is consistent with the express incorporation of this Bureau of Census adjustment into the fiscal year 1999 allotment calculation under Public Law 105–277.

In accordance with section 707 of the 1999 Appropriations Act, as enacted by section 101(f) of Pub. L. 105–277, the FY 1999 reserved allotments are based on the same data as the revised FY 1998 reserved allotments. Specifically, for FY 1999, the Number of Children for each State (provided in thousands) was determined and provided by the Bureau of the Census based on the arithmetic average of the number of low-income children and low-income children with no health insurance as calculated from the 1994, 1995, and 1996 March supplements to the CPS, as adjusted in August 1998. Since the FY 1999 reserved allotments are based on the same data as the revised FY 1998 reserved allotments, the data reflect the updated method for accounting for individuals' access to IHS facilities and services.

The second factor, the State Cost Factor, is based on annual average wages in the health services industry in the State. The State Cost Factor for a State is equal to the sum of: .15, and .85 multiplied by the ratio of the annual average wages in the health industry per employee for the State to the annual wages per employee in the health industry for the 50 States and the District of Columbia. The State Cost Factor for each State was calculated based on such wage data for each State as reported, determined, and provided to HCFA by the Bureau of Labor Statistics (BLS) in the Department of Labor. For the FY 1998 reserved allotments, we used the final State Cost Factor data for each of the most recent 3 years before the beginning of the fiscal year, through August 31, 1997 available from BLS. For the FY 1999 reserved allotments, we used the same final State Cost Factor data available from BLS for 1993, 1994, and 1995, as used in calculating the FY 1998 reserved allotments.

The average of wages per employee for the 50 States and the District of Columbia was calculated by HCFA directly from the State-specific data for each State provided by the BLS. This was necessary because BLS suppressed certain State-specific data in providing HCFA with the State-specific average wages per health services industry employee. BLS is required to suppress such data under the Privacy Act. The State Cost Factor is determined based on the calculation of the ratio of each State's average annual wages in the health industry to the National average annual wages in the health care industry. In order for such National average to appropriately reflect the State-specific suppressed data, HCFA calculated the National average wages directly from the State-specific data provided by BLS. As part of a continuing formal process between HCFA and the BLS, each fiscal year HCFA will obtain these wage data officially from the BLS.

Under section 2104(b)(4) of the Act each of the 50 States and the District of Columbia will receive a minimum allotment of $2 million. Under this provision, to the extent any State's allotment is increased to $2,000,000 from a lower amount that would otherwise have been allotted to the State, the allotments to other States and the District and Columbia must be reduced in a ''pro rata manner'' (but not below $2,000,000) so that the total amount available for allotment to all States does not exceed the amount previously available. For FY 1998 and FY 1999, no State's reserved allotment is below $2,000,000; therefore, no pro rata adjustment was necessary.

Following is an explanation of how HCFA applied the two State-related factors specified in the statute to determine the States' child health plan reserved allotments for FY 1998 and FY 1999. The formula for determining each State's reserved allotment for FY 1998 and FY 1999 of the total available allotment is:

$$SA_i = \frac{(C_i \times SCF_i)}{\sum (C_i \times SCF_i)} \times A_{TA}$$

SA_i = Allotment for a State.

C_i = Number of Children. This is the number of certain low-income children in a State as officially reported, defined, and provided to HCFA by the Bureau of the Census. For FY 1998 and FY 1999, this is the number of children under age 19 with no health insurance whose family income is at or below 200 percent of the poverty line for a family of the same size. (section 2104(b)(2)(B))

SCF_i = The State cost factor for a State (section 2104(b)(1)(A)(ii)). This is equal to:

$.15 + .85 \times (W_i/W_N)$ (section 2104(b)(3)(A)).

W_i = Certain annual average wages per health industry employee for a State.

W_N = Certain annual wages per health industry employee for the 50 States and the District of Columbia.

The annual wages per employee for a State or for all States for a fiscal year is equal to the average of such wages for employees in the health industry, *as reported* by the *Bureau of Labor Statistics* of the Department of Labor.

$\sum(C_i \times SCF_i)$ = The sum of the products of $C_i \times SCF_i$ for each State (section 2104(b)(1)(B)).

A_{TA} = Total amount available for allotment to all States for the fiscal year. For FY 1998, this is $4,224,262,500. For FY 1999, this is $4,204,312,500.

Section 2104(e) of the Act requires that the amount of a State's allotment for a fiscal year be available to the State for a total of 3 years, the fiscal year for which the State child health plan is approved and 2 years following. Section 2104(f) of the Act requires the Secretary to establish a process for redistribution of the amounts of States' allotments that are not expended during the 3-year period to States that have fully expended their allotments. HCFA will soon issue a proposed rule that will address the redistribution process and propose to incorporate the process in Federal regulations.

In accordance with section 2104(b) and (c) of the Act, the total allotment for all States for each fiscal year is available to the 50 States and District of Columbia, the Commonwealths, and the Territories. Although the statute precludes the Secretary from making an allotment to a specific State until it has an approved State child health plan, because of the statutory provisions for redistribution of unused amounts of allotments, the availability of allotments for 3 years, and the potential for retroactive effective dates of State child health plans back to October 1, 1997, we believe it is necessary to establish and publish these reserved allotment amounts for each fiscal year so that States can plan appropriately for the operation of their State children's health insurance programs under title XXI, effective as early as October 1, 1997. No payments may be made from these allotments until a State has an approved State child health plan under title XXI.

In developing the reserved allotment amounts for FY 1998 and FY 1999, we applied the following principles, for which we will be inviting public comment during the rulemaking process.

- For each fiscal year for FYs 1998 through 2007, an allotment amount will be reserved for all 50 States and the District of Columbia and for the Commonwealths and Territories, regardless of whether every State, Commonwealth, or Territory has submitted and the Secretary has approved a State child health plan. This will provide States with the flexibility and time to develop their programs and submit their State child health plans.
- The formula for ''reserving'' an allotment amount for each State will be the same as the formula contained at section 2104(b) of the Act (with the only qualification being for FY 1999, as discussed above). The reserved amount is an estimate of the State's title XXI allotment upon submission and approval of the State's child health plan.
- Under sections 2101(b)(2) and 2105(a) of the Act, no payment of Federal funds from a State's allotment is available for expenditures under a State's title XXI program unless the State has an approved State child health plan. Therefore, States may be at risk for expenditures made under a title XXI child health plan that is submitted, but not yet approved.

Section 706 of the 1999 Appropriations Act, as enacted by section 101(f) of Pub. L. 105–277, provided for FY 1999 only, an additional $32 million available for allotment only to the Commonwealths and Territories. Therefore, the total available allotment to the Commonwealths and Territories in FY 1999 is $42,687,500 (that is, $32,000,000 plus $10,687,500 (.25 percent of the FY 1999 appropriation of $4,275,000,000)).

IV. Table of Reserved State Children's Health Insurance Program Allotments for FY 1998 and FY 1999

KEY TO TABLES I AND II

Column	Description
Column A =	Name of State, Commonwealth, or Territory.
Column B =	Number of Children. The Number of Children for each State (provided in thousands) was determined and provided by the Bureau of the Census based on the arithmetic average of the number of low-income children and low-income children with no health insurance as calculated from the 1994, 1995, and 1996 March supplements to the Current Population Survey, as adjusted in August 1998. These data represent the number of people in each State under 19 years of age whose family income is at or below 200 percent of the poverty threshold appropriate for that family, and who are reported to be not covered by health insurance. The Number of Children for each State was developed by the Bureau of the Census based on the standard methodology used to determine official poverty status and uninsured status in their annual Current Population Surveys on these topics. For FYs 1998 through 2000, the Number of Children is equal to the number of low-income children in each State with no health insurance for the fiscal year. For FY 2001, the Number of Children is equal to the sum of 75 percent of the number of low-income children in the State with no health insurance and 25 percent of the number of low-income children in the State. This is also based on a 3-year average of Census data. For FY 2002 and succeeding years, the Number of Children is equal to the sum of 50 percent of the number of low-income children in the State with no health insurance and 50 percent of the number of low-income children in the State. This is also based on a 3-year average of Census data.
Column C =	State Cost Factor. The State Cost Factor for a State is equal to the sum of: .15, and .85 multiplied by the ratio of the annual average wages in the health industry per employee for the State to the annual wages per employee in the health industry for the 50 States and the District of Columbia. The State Cost Factor for each State was calculated based on such wage data for each State as reported, determined, and provided to HCFA by the BLS in the Department of Labor for 1993, 1994, and 1995.

KEY TO TABLES I AND II—Continued

Column	Description
Column D =	Product. The Product for each State was calculated by multiplying the Number of Children in Column B by the State Cost Factor in Column C. The sum of the Products for all 50 States and the District of Columbia is below the Products for each State in Column D. The Product for each State and the sum of the Products for all States provides the basis for allotment to States.
Column E =	Percent Share of Total. This is the calculated percentage share for each State of the total allotment available to the 50 States and the District of Columbia. The Percent Share of Total is calculated as the ratio of the Product for each State in Column D to the sum of the products for all 50 States and the District of Columbia below the Products for each State in Column D.
Column F =	Allotment. This is the State Child Health Program allotment for each State, Commonwealth, or Territory. For each of the 50 States and the District of Columbia, this is determined as the Percent Share of Total in Column E for the State multiplied by the total amount available for allotment for the 50 States and the District of Columbia for the fiscal year.
	For each of the Commonwealths and Territories, the allotment is determined as the Percent Share of Total in Column E multiplied by the total amount available for allotment to the Commonwealths and Territories. For the Commonwealths and Territories, the Percent Share of Total in Column E is specified in section 2104(c) of the Act. For FY 1999, the Commonwealth and Territories were allotted an additional $32 million, which is added to the total allotment available to the territories for FY 1999 determined by the formula described above. The total amount is then allotted to the Commonwealths and Territories according to the percentages specified in section 2104 of the Act.

STATE CHILDREN'S HEALTH INSURANCE PROGRAM RESERVED ALLOTMENTS FOR FISCAL YEAR: 1998

State (A)	Number of children (000) (B)	State cost factor (C)	Product (D)	Percent share of totals [3] (E)	Allotment [1] (F)
ALABAMA	154	0.9510	146.46	2.04	$85,975,213
ALASKA	11	1.0669	11.74	0.16	6,889,296
ARIZONA	190	1.0472	198.97	2.76	116,797,799
ARKANSAS	92	0.8871	81.61	1.13	47,907,958
CALIFORNIA	1,281	1.1365	1,455.92	20.23	854,644,807
COLORADO	72	0.9888	71.19	0.99	41,790,547
CONNECTICUT	53	1,1237	59.55	0.83	34,959,075
DELAWARE	13	1.0553	13.72	0.19	8,053,463
DISTRICT OF COLUMBIA	16	1.2857	20.57	0.29	12,076,002
FLORIDA	444	1.0368	460.32	6.40	270,214,724
GEORGIA	214	0.9923	212.36	2.95	124,660,136
HAWAII	13	1.1722	15.24	0.21	8,945,304
IDAHO	31	0.8726	27.05	0.38	15,879,707
ILLINOIS	211	0.9892	208.73	2.90	122,528,573
INDIANA	131	0.9169	120.12	1.67	70,512,432
IOWA	67	0.8253	55.30	0.77	32,460,463
KANSAS	60	0.8704	52.22	0.73	30,656,520
KENTUCKY	93	0.9146	85.06	1.18	49,932,527
LOUISIANA	194	0.8934	173.31	2.41	101,736,841
MAINE	24	0.8863	21.27	0.30	12,486,977
MARYLAND	100	1.0498	104.98	1.46	61,627,358
MASSACHSETTS	69	1.0576	72.97	1.01	42,836,231
MICHIGAN	156	1.0001	156.02	2.17	91,585,508
MINNESOTA	50	0.9675	48.37	0.67	28,395,980
MISSISSIPPI	110	0.8675	95.43	1.33	56,017,103
MISSOURI	97	0.9075	88.03	1.22	51,673,123
MONTANA	24	0.8333	20.00	0.28	11,740,395
NEBRASKA	30	0.8440	25.32	0.35	14,862,926
NEVADA	43	1.2046	51.80	0.72	30,407,067
NEW HAMPSHIRE	20	0.9760	19.52	0.27	11,458,404
NEW JERSEY	134	1.1241	150.62	2.09	88,417,899
NEW MEXICO	117	0.9169	107.28	1.49	62,972,705
NEW YORK	399	1.0914	435.47	6.05	255,626,409
NORTH CAROLINA	138	0.9815	135.45	1.88	79,508,462
NORTH DAKOTA	10	0.8587	8.59	0.12	5,040,741
OHIO	205	0.9617	197.16	2.74	115,734,364
OKLAHOMA	170	0.8588	145.99	2.03	85,699,061
OREGON	67	0.9947	66.65	0.93	39,121,663
PENNSYLVANIA	200	1.0005	200.9	2.78	117,456,521
RHODE ISLAND	19	0.9580	18.20	0.25	10,684,422
SOUTH CAROLINA	110	0.9843	108.27	1.50	63,557,819
SOUTH DAKOTA	17	0.8559	14.55	0.20	8,541,224
TENNESSEE	115	0.9799	112.69	1.57	66,153,082
TEXAS	1,031	0.9275	956.25	13.29	561,331,521

STATE CHILDREN'S HEALTH INSURANCE PROGRAM RESERVED ALLOTMENTS FOR FISCAL YEAR: 1998—Continued

State (A)	Number of children (000) (B)	State cost factor (C)	Product (D)	Percent share of totals [3] (E)	Allotment [1] (F)
UTAH	46	0.8977	41.30	0.57	24,241,159
VERMONT	7	0.8604	6.02	0.08	3,535,445
VIRGINIA	118	0.9862	116.38	1.62	68,314,915
WASHINGTON	85	0.9352	79.49	1.10	46,661,213
WEST VIRGINIA	45	0.8937	40.21	0.56	23,606,744
WISCONSIN	75	0.9229	69.22	0.96	40,633,039
WYOMING	15	0.9858	13.14	0.18	7,711,638
TOTAL STATES ONLY			7,196.17	100.00	4,224,262,500
ALLOTMENTS FOR COMMONWEALTHS AND TERRITORIES [2]					
PUERTO RICO				91.60	9,835,550
GUAM				3.50	375,813
VIRGIN ISLANDS				2.60	279,175
AMERICA SAMOA				1.20	128,850
N. MARIANA ISLANDS				1.10	118.113
TOTAL COMMONWEALTHS AND TERRITORIES ONLY				100.00	10,737,500
TOTAL STATES AND COMMONWEALTH AND TERRITORIES					4,235,000,000

Footnotes:

(1) Total amount available for allotment to the 50 States and the District of Columbia is $4,224,262,500; determined as the fiscal year appropriation ($4,295,000,000) reduced by the total amount available for allotment to the Commonwealths and Territories ($10,737,500) and amounts for Special Diabetes Grants ($60,000,000) under sections 4921 and 4922 of BBA.

(2) Total amount available for allotment to the Commonwealths and Territories is $10,737,500; determined as .25 percent of the fiscal year appropriation ($4,295,000,000).

(3) Percent share of total amount for allotment to the Commonwealths and Territories is as specified in section 2104(c) of the Social Security Act.

STATE CHILDREN'S HEALTH INSURANCE PROGRAM RESERVED ALLOTMENTS FOR FISCAL YEAR: 1999

State (A)	Number of children (000) (B)	State cost factor (C)	Product (D)	Percent share of total [3] (E)	Allotment [1] (F)
ALABAMA	154	0.9510	146.46	2.04	$85,569,176
ALASKA	11	1.0669	11.74	0.16	6,856,760
ARIZONA	190	1.0472	198.97	2.76	116,246,196
ARKANSAS	92	0.8871	81.61	1.13	47,681,702
CALIFORNIA	1,281	1.1365	1,455.92	20.23	850,608,561
COLORADO	72	0.9888	71.19	0.99	41,593,182
CONNECTICUT	53	1.1237	59.55	0.83	34,793,973
DELAWARE	13	1.0553	13.72	0.19	8,015,429
DISTRICT OF COLUMBIA	16	1.2857	20.57	0.29	12,018,971
FLORIDA	444	1.0368	460.32	6.40	268,938,576
GEORGIA	214	0.9923	212.36	2.95	124,071,402
HAWAII	13	1.1722	15.24	0.21	8,903,057
IDAHO	31	0.8726	27.05	0.38	15,804,712
ILLINOIS	211	0.9892	208.73	2.90	121,949,905
INDIANA	131	0.9169	120.12	1.67	70,179,422
IOWA	67	0.8253	55.30	0.77	32,307,161
KANSAS	60	0.8704	52.22	0.73	30,511,738
KENTUCKY	93	0.9146	85.06	1.18	49,696,709
LOUISIANA	194	0.8934	173.31	2.41	101,256,366
MAINE	24	0.8863	21.27	0.30	12,428,004
MARYLAND	100	1.0498	104.98	1.46	61,363,309
MASSACHUSETTS	69	1.0576	72.97	1.01	42,633,928
MICHIGAN	156	1.0001	156.02	2.17	91,152,976
MINNESOTA	50	0.9675	48.37	0.67	28,261,873
MISSISSIPPI	110	0.8675	95.43	1.33	55,752,550
MISSOURI	97	0.9075	88.03	1.22	51,429,086
MONTANA	24	0.8333	20.00	0.28	11,684,948
NEBRASKA	30	0.8440	25.32	0.35	14,792,733
NEVADA	43	1.2046	51.80	0.72	30,263,463
NEW HAMPSHIRE	20	0.9760	19.52	0.27	11,404,289
NEW JERSEY	134	1.1241	150.62	2.09	88,000,326

STATE CHILDREN'S HEALTH INSURANCE PROGRAM RESERVED ALLOTMENTS FOR FISCAL YEAR: 1999—Continued

State (A)	Number of children (000) (B)	State cost factor (C)	Product (D)	Percent share of total [3] (E)	Allotment [1] (F)
NEW MEXICO	117	0.9169	107.28	1.49	62,675,303
NEW YORK	399	1.0914	435.47	6.05	254,419,158
NORTH CAROLINA	138	0.9815	135.45	1.88	79,132,966
NORTH DAKOTA	10	0.8587	8.59	0.12	5,016,935
OHIO	205	0.9617	197.16	2.74	115,187,783
OKLAHOMA	170	0.8588	145.99	2.03	85,294,328
OREGON	67	0.9947	66.65	0.93	38,936,902
PENNSYLVANIA	200	1.0005	200.09	2.78	116,901,807
RHODE ISLAND	19	0.9580	18.20	0.25	10,633,962
SOUTH CAROLINA	110	0.9843	108.27	1.50	63,257,653
SOUTH DAKOTA	17	0.8559	14.55	0.20	8,500,886
TENNESSEE	115	0.9799	112.69	1.57	65,840,660
TEXAS	1,031	0.9275	956.25	13.29	558,680,510
UTAH	46	0.8977	41.30	0.57	24,126,675
VERMONT	7	0.8604	6.02	0.08	3,518,748
VIRGINIA	118	0.9862	116.38	1.62	67,992,282
WASHINGTON	85	0.9352	79.49	1.10	46,440,845
WEST VIRGINIA	45	0.8937	40.21	0.56	23,495,256
WISCONSIN	75	0.9229	69.22	0.96	40,441,141
WYOMING	15	0.8758	13.14	0.18	7,675,218
TOTAL STATES ONLY	.....	.....	7,196.17	100.00	4,204,312,500
ALLOTMENTS FOR COMMONWEALTHS AND TERRITORIES: [2]					
PUERTO RICO	.....	.....	.....	91.60	39,101,750
GUAM	.....	.....	.....	3.50	1,494,063
VIRGIN ISLANDS	.....	.....	.....	2.60	1,109,875
AMERICAN SAMOA	.....	.....	.....	1.20	512,250
N. MARIANA ISLANDS	.....	.....	.....	1.10	469,563
TOTAL COMMONWEALTHS AND TERRITORIES ONLY	.....	.....	.....	100.00	42,687,500
TOTAL STATES AND COMMONWEALTH AND TERRITORIES	.....	.....	.....	.....	4,247,000,000

Footnotes:

(1) Total amount available for allotment to the 50 States and the District of Columbia is $4,204,312,500; determined as the fiscal year appropriation ($4,275,000,000) reduced by the total amount available for allotment to the Commonwealths and Territories ($10,687,500) and amounts for Special Diabetes Grants ($60,000,000) under sections 4921 and 4922 of BBA.

(2) Total amount available for allotment to the Commonwealths and Territories is $42,687,500; determined as $10,687,500 (.25 percent of $4,275,000,000, the fiscal year appropriation) plus $32,000,000.

(3) Percent share of total amount available for allotment to the Commonwealths and Territories is as specified in section 2104(c) of the Social Security Act.

V. Impact Statement

HCFA has examined the impact of this notice as required by Executive Order 12866. Executive Order 12866 directs agencies to assess all costs and benefits of available regulatory alternatives and, when rules are necessary, to select regulatory approaches that maximize net benefits (including potential economic environments, public health and safety, other advantages, distributive impacts, and equity). We believe that this notice is consistent with the regulatory philosophy and principles identified in the Executive Order.

This notice merely provides notification of the reserved FY 1998 and FY 1999 State CHIP allotments available to provide Federal funding to individual States, Commonwealths, and Territories for expenditures in the new Children's Health Insurance Program and the assumption and methodology that HCFA used to determine these reserved allotments. The formula for State allotments is specified in the statute. This notice by itself has no economic impact. Final State CHIP allotments for each State will be calculated using the statutory formula and may vary from these reserved amounts depending upon the number of States that submit approved State plans under title XXI. (As noted above, the allotment process will be set forth in more detail in future rulemaking.)

We believe this notice will have an overall positive impact by informing States of the extent to which they will be permitted to expend funds under approved State child health plans in FY 1998 and FY 1999. States will be able to conduct advance planning necessary for implementation of the State Child Health Insurance Program if they choose, beginning October 1, 1997.

In accordance with the provisions of Executive Order 12866, this notice was reviewed by the Office of Management and Budget.

(Section 1102 of the Social Security Act (42 U.S.C. 1302)

(Catalog of Federal Domestic Assistance Program No. 00.000, State Children's Health Insurance Program)

Dated: December 18, 1998.

Nancy Ann Min DeParle,

Administrator, Health Care Financing Administration.

Dated: January 5, 1999.

Donna E. Shalala,

Secretary.

[FR Doc. 99–2859 Filed 2–5–99; 8:45 am]

BILLING CODE 4120–01–P

DEPARTMENT OF HEALTH AND HUMAN SERVICES

National Institutes of Health

Center for Scientific Review; Notice of Closed Meetings

Pursuant to section 10(d) of the Federal Advisory Committee Act, as amended (5 U.S.C. Appendix 2), notice is hereby given of the following meetings.

The meetings will be closed to the public in accordance with the provisions set forth in sections 552b)(c)(4) and 552b(c)(6), Title 5 U.S.C. as amended. The grant applications and/or contract proposals and the discussions could disclose confidential trade secrets or commercial property such as patentable material, and personal information concerning individuals associated with the grant applications and/or contract proposals, the disclosure of which would constitute a clearly unwarranted invasion of personal privacy.

Name of Committee: Cardiovascular Sciences Initial Review Group Hematology Subcommittee 1.
Date: February 11–12, 1999.
Time: 8:00 am to 5:00 pm.
Agenda: To review and evaluate grant applications.
Place: Holiday Inn, Bethesda, MD 20814.
Contact Person: Robert Su, Scientific Review Administrator, Center for Scientific Review, National Institutes of Health, 6701 Rockledge Drive, Room 4134, MSC 7802, Bethesda, MD 20892, (301) 435–1195.
This notice is being published less than 15 days prior to the meeting due to the timing limitations imposed by the review and funding cycle.

Name of Committee: Infectious Diseases and Microbiology Initial Review Group, Tropical Medicine and Parasitology Study Section.
Date: February 11–12, 1999.
Time: 8:00 am to 5:00 pm.
Agenda: To review and evaluate grant applications.
Place: Holiday Inn Georgetown, 2101 Wisconsin Ave., Washington, DC 20007.
Contact Person: Jean Hickman, Scientific Review Administrator, Center for Scientific Review, National Institutes of Health, 6701 Rockledge Drive, Room 4194, MSC 7808, Bethesda, MD 20892, (301) 435–1146.
This notice is being published less than 15 days prior to the meeting due to the timing limitations imposed by the review and funding cycle.

Name of Committee: Health Promotion and Disease Prevention Initial Review Group, Alcohol and Toxicology Subcommittee 1.
Date: February 11–12, 1999.
Time: 8:00 am to 5:00 pm.
Agenda: To review and evaluate grant applications.
Place: Washington Monarch Hotel, 2401 M Street, NW, Washington, DC 20037.
Contact Person: Christine Melchior, Scientific Review Administrator, Center for Scientific Review, National Institutes of Health, 6701 Rockledge Drive, Room 4102, MSC 7816, (301) 435–1713.
This notice is being published less than 15 days prior to the meeting due to the timing limitations imposed by the review and funding cycle.

Name of Committee: Cell Development and Function Initial Review Group, Human Embryology and Development Subcommittee 2.
Date: February 11–12, 1999.
Time: 8:00 am to 5:00 pm.
Agenda: To review and evaluate grant applications.
Place: Holiday Inn, 5520 Wisconsin Avenue, Chevy Chase, MD 20815.
Contact Person: Sherry L. Dupere, Scientific Review Administrator, Center for Scientific Review, National Institutes of Health, 6701 Rockledge Drive, Room 5136, MSC 7840, Bethesda, MD 20892, (301) 435–1021.
This notice is being published less than 15 days prior to the meeting due to the timing limitations imposed by the review and funding cycle.

Name of Committee: Cell Development and Function Initial Review Group, Molecular Biology Study Section.
Date: Febuary 11–12, 1999.
Time: 8:30 am to 5:00 pm.
Agenda: To review and evaluate grant applications.
Place: St. James Hotel, 950 24th Street N.W., Washington, DC 20037.
Contact Person: Anthony Cater, Scientific Review Administrartor, Center for Scientific Review, National Insititutes of Health, 6701 Rockledge Drive, Room 5142, MSC 7840, Bethesda, MD 20892, (301) 435–1024.
This notice is being published less than 15 days prior to the meeting due to the timing limitations imposed by the review and funding cycle.

Name of Committee: Genetic Sciences Initial Review Group, Mammalian Genetics Study Section.
Date: February 11–12, 1999.
Time: 9:00 am to 5:00 pm.
Agenda: To review and evaluate grant applications.
Place: Embassy Suites Chevy Chase Pavilion, 4300 Military Road, NW, Washington, DC 20015.
Contact Person: Camilla Day, Scientific Review Administrator, Center or Scientific Review, National Institutes of Health 6701 Rockledge Drive, Room 6152, MSC 7840, Bethesda, MD 20892, (301) 435–1037, dayc@drg.nih.gov
This notice is being published less than 15 days prior to the meeting due to the timing limitations imposed by the review and funding cycle.

Name of Committee: Biobehavioral and Social Sciences Initial Review Group, Human Development and Aging Subcommittee 1.
Date: February 11–12, 1999.
Time: 9:00 am to 5:00 pm.
Agenda: To review and evaluate grant applications.
Place: Embassy Suites Chevy Chase Pavilion, 4300 Military Road, NW, Washinton, DC 20015.
Contact Person: Anita Miller-Sostek, Scientific Review Administrator, Center for Scientific Review, National Institutes of Health, 6701 Rocklege Drive, Room, 5202, MSC 7848, Bethesda, MD 20892, (301) 435–1260.
This notice is being published less than 15 days prior to the meeting due to the timing limitations imposed by the review and funding cycle.

Name of Committee: Center for Scientific Review Special Emphasis Panel.
Date: February 11, 1999.
Time: 10:00 am to 12:00 pm.
Agenda: To review and evaluate grant applications.
Place: NIH, Rockledge 2, Bethesda, MD 20892, (Telephone Conference Call).
Contact Person: Daniel B. Berch, Scientific Review Administrator, Center for Scientific Review, National Institutes of Health, 6701 Rockledge Drive, Room 3182, MSC 7848, Bethesda, MD 20892, (301) 435–0902.
This notice is being published less than 15 days prior to the meeting due to the timing limitations imposed by the review and funding cycle.

Name of Committee: Infectious Diseases and Microbiology Initial Review Group, Bacteriology and Mycology Subcommittee 2.
Date: February 11–12, 1999.
Time: 8:30 am to 5:00 pm.
Agenda: To review and evaluate grant applications.
Place: Holiday Inn, 5520 Wisconsin Ave, Chevy Chase, MD 20815.
Contact Person: William C. Branche, Scientific Review Administrator, Center for Scientific Review, National Institutes of Health, 6701 Rockledge Drive, Room 4182, MSC 7808, (301) 435–1148.
This notice is being published less than 15 days prior to the meeting due to the timing limitations imposed by the review and funding cycle.

Name of Committee: Center for Scientific Review Special Emphasis Panel.
Date: February 11, 1999.
Time: 12:30 pm to 1:30 pm.
Agenda: To review and evaluate grant applications.
Place: Georgetown Inn, 1310 Wisconsin Ave., N.W., Washington, DC 20007.
Contact Person: Carole L. Jelsema, Scientific Review Administrator, Center for Scientific Review, National Institutes of Health, 6701 Rockledge Drive, Room 5222, MSC 7850, Bethesda, MD 20892, (301) 435–1249, jelsema@drg.nih.gov.
This notice is being published less than 15 days prior to the meeting due to the timing limitations imposed by the review and funding cycle.

Name of Committee: Center for Scientific Review Special Emphasis Panel.
Date: February 15, 1999.
Time: 2:00 pm to 3:00 pm.
Agenda: To review and evaluate grant applications.
Place: NIH, Rockledge 2, Bethesda, MD 20892, (Telephone Conference Call).
Contact Person: Lee Rosen, Scientific Review Administrator, Center for Scientific

Review, National Institutes of Health, 6701 Rockledge Drive, Room 5116, MSC 7854, Bethesda, MD 20892, (301) 435–1171.

This notice is being published less than 15 days prior to the meeting due to the timing limitations imposed by the review and funding cycle.

(Catalogue of Federal Domestic Assistance Program Nos. 93.306, Comparative Medicine, 93.306; 93.333, Clinical Research, 93.333, 93.337, 93.393–93.396, 93.837–93.844, 93–846–93.878, 93–892, 93.893, National Institutes of Health, HHS)

Dated: February 2, 1999.

LaVerne Y. Stringfield,

Committee Management Officer, NIH.

[FR Doc. 99–3002 Filed 2–5–99; 8:45 am]

BILLING CODE 4140–01–M

DEPARTMENT OF HEALTH AND HUMAN SERVICES

National Institutes of Health

National Institute of Neurological Disorders and Stroke; Notice of Closed Meetings

Pursuant to section 10(d) of the Federal Advisory Committee Act, as amended (5 U.S.C. Appendix 2), notice is hereby given of the following meetings.

The meetings will be closed to the public in accordance with the provisions set forth in sections 552b(c)(4) and 552b(c)(6), Title 5 U.S.C., as amended. The contract proposals and the discussions could disclose confidential trade secrets or commercial property such as patentable material, and personal information concerning individuals associated with the contract proposals, the disclosure of which would constitute a clearly unwarranted invasion of personal privacy.

Name of Committee: National Institute of Neurological Disorders and Stroke Special Emphasis Panel.

Date: February 16, 1999.

Time: 1:00 pm to 2:00 pm.

Agenda: To review and evaluate contract proposals.

Place: 7550 Wisconsin Avenue, Federal Building, Room 9C10, Bethesda, MD 20814–9692 (Telephone Conference Call).

Contact Person: Phillip F. Wiethorn, Scientific Review Administrator, Scientific Review Branch, Division of Extramural Activities, NINDS, National Institutes, of Health, PHS, DHHS, Federal Building, Room 9C10, 7550 Wisconsin Avenue, Bethesda, MD 20892, 301–496–9223.

This notice is being published less than 15 days prior to the meeting due to the timing limitations imposed by the review and funding cycle.

Name of Committee: National Institute of Neurological Disorders and Stroke Special Emphasis Panel.

Date: February 18, 1999.

Time: 2:00 pm to 3:00 pm.

Agenda: To review and evaluate contract proposals.

Place: Federal Building, Room 9C10, 7550 Wisconsin Avenue, Bethesda, MD 20814–9692 (Telephone Conference Call).

Contact Person: Phillip F. Wiethorn, Scientific Review Administrator, Scientific Review Branch, Division of Extramural Activities NINDS, National Institutes of Health, PHS, DHHS, Federal Building, Room 9C10, 7550 Wisconsin Avenue, Bethesda, MD 20892, 301–496–9223.

This notice is being published less than 15 days prior to the meeting due to the timing limitations imposed by the review and funding cycle.

Name of Committee: National Institute of Neurological Disorders and Stroke Special Emphasis Panel.

Date: February 25, 1999.

Time: 1:00 pm to 2:00 pm.

Agenda: To review and evaluate contract proposals.

Place: 7550 Wisconsin Avenue, Federal Building, Room 9C10, Bethesda, MD 20814–9692 (Telephone Conference Call).

Contact Person: Phillip F. Wiethorn, Scientific Review Administrator, Scientific Review Branch, Division of Extramural Activities, NINDS, National Institutes of Health, PHS, DHHS, Federal Building, Room 9C10, 7550 Wisconsin Avenue, Bethesda, MD 20892, 301–496–9223.

This notice is being published less than 15 days prior to the meeting due to the timing limitations imposed by the review and funding cycle.

(Catalogue of Federal Domestic Assistance Program Nos. 93.853, Clinical Research Related to Neurological Disorders; 93.854, Biological Basis Research in the Neurosciences, National Institutes of Health, HHS)

Dated: February 2, 1999.

LaVerne Y. Stringfield,

Committee Management Officer, NIH.

[FR Doc. 99–3001 Filed 2–5–99; 8:45 am]

BILLING CODE 4140–01–M

DEPARTMENT OF HEALTH AND HUMAN SERVICES

National Institutes of Health

National Institute of Environmental Health Sciences; Notice of Closed Meeting

Pursuant to section 10(d) of the Federal Advisory Committee Act, as amended (5 U.S.C. Appendix 2), notice is hereby given of the following meeting.

The meeting will be closed to the public in accordance with the provisions set forth in sections 552b(c)(4) and 552b(c)(6), Title 5 U.S.C., as amended. The grant applications and the discussions could disclose confidential trade secrets or commercial property such as patentable material, and personal information concerning individuals associated with the grant applications, the disclosure of which would constitute a clearly unwarranted invasion of personal privacy.

Name of Committee: National Institute of Environmental Health Sciences Special Emphasis Panel, NIEHS Special Emphasis Panel—Environmental Justice: Partnerships for Communication.

Date: February 17–19, 1999.

Time: February 17, 1999, 7:00 p.m to 10:00 p.m.

Agenda: To review and evaluate grant applications.

Place: Hawthorne Suites, 300 Meredith Drive, Durham, NC 27713.

Time: February 18, 1999, 8:30 am to 5:00 p.m.

Agenda: to review and evaluate grant applications.

Place: Hawthorne Suites, 300 Meredith Drive, Durham, NC 27713.

Time: February 19, 1999, 8:30 am to 5:00 p.m.

Agenda: To review and evaluate grant applications.

Place: Hawthorne Suites, 300 Meredith Drive, Durham, NC 27712.

Contact Person: David Brown, MPH, Nat'l Institute of Environmental Health Sciences, P.O. Box 12233, Research Triangle Park, NC 27709, (919) 541–4964.

(Catalogue of Federal Domestic Assistance Program Nos. 93.113, Biological Response to Environmental Health Hazards; 93.114, Applied Toxicological Research and Testing; 93.115, Biometry and Risk Estimation—Health Risks from Environmental Exposures; 93.142, NIEHS Hazardous Waste Worker Health and Safety Training; 93.143, NIEHS Superfund Hazards Substances—Basic Research and Education; 93.894, Resources and Manpower Development in the Environmental Health Sciences, National Institutes of Health, HHS)

Dated: February 1, 1999.

LaVerne Y. Stringfield,

Committee Management Officer, NIH.

[FR Doc. 99–3003 Filed 2–5–99; 8:45 am]

BILLING CODE 4140–01–M

DEPARTMENT OF HEALTH AND HUMAN SERVICES

National Institutes of Health

National Institute on Drug Abuse; Notice of Closed Meetings

Pursuant to section 10(d) of the Federal Advisory Committee Act, as amended (5 U.S.C. Appendix 2), notice is hereby given of the following meetings.

The meetings will be closed to the public in accordance with the provisions set forth in sections 552b(c)(4) and 552b(c)(6), Title 5 U.S.C., as amended. The grant applications and the discussions could disclose confidential trade secrets or commercial

property such as patentable material, and personal information concerning individuals associated with the grant applications, the disclosure of which would constitute a clearly unwarranted invasion of personal privacy.

Name of Committee: National Institute on Drug Abuse Initial Review Group, Treatment Research Subcommittee.

Date: March 4–5, 1999.

Time: 9:00 a.m. to 5:00 p.m.

Agenda: To review and evaluate grant applications.

Place: Hyatt Regency Bethesda, One Bethesda Metro Center, Bethesda, MD 20814.

Contact Person: Kesinee Nimit, Health Scientist Administrator, Office of Extramural Program Review, National Institute on Drug Abuse, National Institutes of Health, DHHS, 5600 Fishers Lane, Room 10–22, Rockville, MD 20857 (301) 443–9042.

Name of Committee: National Institute on Drug Abuse Initial Review Group, Health Services Research Subcommittee.

Date: March 4, 1999.

Time: 9:00 am to 5:00 pm.

Agenda: To review and evaluate grant applications.

Place: Hyatt Regency Bethesda, One Bethesda Metro Center, Bethesda, MD 20814.

Contact Person: Marina L. Volkov, Special Assistant, Office of Extramural Program Review, National Institute on Drug Abuse, National Institutes of Health, DHHS, 5600 Fishers Lane, Room 10–22, Rockville, MD 20857, (301) 443–9042.

Name of Committee: National Institute on Drug Abuse Special Emphasis Panel, Training and Career Development.

Date: March 16–18, 1999.

Time: 9:00 a.m. to 5:00 p.m.

Agenda: To review and evaluate grant applications.

Place: Gathersburg Marriott Washington Center, 9751 Washingtonian Boulevard, Gaithersburgh, MD 20878.

Contact Person: Mark Swieter, Health Scientist Administrator, Office of Extramural Program Review, National Institute on Drug Abuse, National Institutes of Health, DHHS, 5600 Fishers Lane, Room 10–42, Rockville, MD 20857, (301) 443–2620.

(Catalogue of Federal Domestic Assistance Program Nos. 93.277, Drug Abuse Scientist Development Award for Clinicians, Scientists Development Awards, and Research Scientist Awards; 93.278, Drug Abuse National Research Service Awards for Research Training; 93.279, Drug Abuse Research Programs, National Institutes of Health, HHS)

Dated: January 29, 1999.

LaVerne Y. Stringfield,

Committee Management Officer, NIH.

[FR Doc. 99–3004 Filed 2–5–99; 8:45 am]

BILLING CODE 4140–01–M

DEPARTMENT OF HEALTH AND HUMAN SERVICES

Public Health Services

National Toxicology Program; Meeting of the Advisory Committee on Alternative Toxicological Methods

Pursuant to Section 10(a) of the Federal Advisory Committee Act, as amended (5 U.S.C. Appendix 2), notice is hereby given to a meeting of the National Toxicology Program (NTP) Advisory Committee on Alternative Toxicological Methods, U.S. Public Health Service. The meeting will be held from 8:45 a.m. to 4:00 p.m. on March 4, 1999 in the Conference Center, Building 101, South Campus, NIEHS, 111 Alexander Drive, Research Triangle Park, North Carolina 27709. The meeting will be entirely open to the public from 8:45 a.m. to adjournment with attendance limited only by space available. Individuals who plan to attend and need special assistance, such as sign language interpretation or other reasonable accommodations should notify the contact person listed below in advance of the meeting.

Background

Under authority of 42 U.S.C. 217a, Section 222 of the Public Health Service Act, as amended, the Department of Health and Human Services has established an Advisory Committee on Alternative Toxicological Methods. The Committee functions to provide advice on the activities and priorities of the National Toxicology Program (NTP) Interagency Center for the Evaluation of Alternative Toxicological Methods (Center) and the Interagency Coordinating Committee on the Validation of Alternative Methods (ICCVAM), and to provide advice on ways to foster partnership activities and productive interactions among all stakeholders. The Advisory Committee is composed of knowledgeable representatives drawn from academia, industry, public interest organizations, other state and Federal agencies, and the international community.

The National Toxicology Program established the Center and ICCVAM to fulfill specific mandates provided to the National Institute of Environmental Health Sciences by Public Law 103–43, Section 1301. The NIEHS was directed to (1) develop and validate toxicological testing methods, including alternative methods that can reduce or eliminate the use of animals in acute or chronic toxicity testing, (2) establish criteria for the validation and regulatory acceptance of alternative testing methods, and (3) recommend a process through which scientifically validated alternative methods can be accepted for regulatory use. Criteria and processes for validation and regulatory acceptance were developed in conjunction with 14 other Federal agencies and programs with broad input from the public. These are described in the document ''Validation and Regulatory Acceptance of Toxicological Test Methods: A Report of the Ad Hoc Interagency Coordinating Committee on the Validation of Alternative Methods'' NIH publication 97–3981, March 1997, which is available on the internet at http://ntp-server.niehs.nih.gov /htdocs/ICCVAM/ICCVAM/html. or by request to the Center at the address provided below.

A standing Interagency Coordinating Committee on the Validation of Alternative Methods (ICCVAM) was subsequently established as a collaborative effort by NIEHS and 13 other Federal regulatory and research agencies and programs. The ICCVAM facilitates cross-agency communication and coordination on issues relating to validation, acceptance, and national/international harmonization of toxicological test methods. The ICCVAM works with the Center to carry out the scientific review of proposed methods of multi-agency interest, and provides recommendations regarding their usefulness to appropriate agencies. The ICCVAM also provides a mechanism for interagency communication with stakeholders throughout the process of test method development and validation. The following Federal regulatory and research agencies and organizations are participating in this effort:

- Consumer Product Safety Commission
- Department of Defense
- Department of Energy
- Department of Health and Human Services
  - Agency for Toxic Substances and Disease Registry
  - Food and Drug Administration
  - National Institute for Occupational Safety and Health/CDC
  - National Institutes of Health
  - National Cancer Institute
  - National Institute of Environmental Health Sciences
  - National Library of Medicine
- Department of the Interior
- Department of Labor
  - Occupational Safety and Health Administration
- Department of Transportation
  - Research and Special Programs Administration
- Environmental Protection Agency

The Center was established to provide operational support for the ICCVAM

and to assist Federal Agencies by coordinating and facilitating (1) the interagency review and adoption of toxicological test methods of multi-agency interest and (2) the participation and communication with other stakeholders throughout the process of test method development and validation. The Center organizes, in collaboration with ICCVAM, independent scientific peer reviews and workshops for test methods of interest to Federal agencies. Peer review panels are convened to develop scientific consensus on the usefulness of test methods to generate information for specific human health and/or ecological risk assessment purposes. Expert workshops are convened to evaluate the adequacy of current test methods for assessing specific toxicities, to identify areas in need of improved or new methods, to evaluate proposed validation studies, and to evaluate the validation status of methods. The center provides an opportunity for partnerships with other agencies and organizations to facilitate the development, validation, and review of alternative testing methods. The Center and ICCVAM seek to promote the scientific validation and regulatory acceptance of toxicological test methods that will enhance agencies' ability to assess risks and make decisions, and that will refine, reduce, and replace animal use whenever possible. The Center Office is located at NIEHS and can be contacted by telephone 919–541–3398, fax 919–541–0947, or email, iccvam@niehs.nih.gov.

Agenda

The primary agenda topics are concerned with presentations and discussions relating to processes, priorities, and recent and proposed activities of the NTP Interagency Center for the Evaluation of Alternative Toxicological Methods and the Interagency Coordinating Committee on the Validation of Alternative Methods. Specific agenda topics will include discussion of the outcome of the Corrositex® test method peer review meeting previously convened on January 21, 1999; an update and discussion of the peer review meeting report and regulatory acceptance process for the murine local lymph node assay (LLNA) test method; an update on the status of the EPA and OECD plans for validation of endocrine disruptor screening and testing methods; and plans for future test method workshops and reviews.

The Executive Secretary, Dr. Larry Hart, Environmental Toxicology Program, P.O. Box 12233, NIEHS, Research Triangle Park, North Carolina 27709, telephone (919) 541–3971, FAX (919) 541–0295, will have available an agenda with times and a roster of Committee members prior to the meeting and summary minutes subsequent to the meeting.

Dated: January 29, 1999.

Kenneth Olden,

Director, National Toxicology Program.

[FR Doc. 99–3005 Filed 2–5–99; 8:45 am]

BILLING CODE 4140–01–M

DEPARTMENT OF THE INTERIOR

Fish and Wildlife Service

Notice of Receipt of Application for Endangered Species Permit

AGENCY: Fish and Wildlife Service, Interior.

ACTION: Notice of receipt.

The following applicant has applied for a permit to conduct certain activities with an endangered species. This notice is provided pursuant to section 10(c) of the Endangered Species Act of 1973, as amended (16 U.S.C. 1531 *et seq.*):

Applicant: Mr. John Paul D. Atkins, Baltimore, Maryland, PRT–TE007663–0

The applicant requests authorization to take (live capture and handle) two federally listed bats: the Indiana bat (*Myotis sodalis*), and the gray bat (*Myotis grisescens*), throughout the State of Maryland.

Written data or comments should be submitted to the Regional Permits Coordinator, U.S. Fish and Wildlife Service, 300 Westgate Center Drive, Hadley, Massachusetts 01035 and must be received within 30 days of the date of this publication.

Documents and other information submitted with this application are available for review by any party who submits a written request for a copy of such documents to the following office within 30 days of the date of publication of this notice. U.S. Fish and Wildlife Service, 300 Westgate Center Drive, Hadley, Massachusetts 01035. Attention: Diane Lynch, Regional Permits Coordinator. Telephone: 413–253–8628; Fax: 413–253–8482.

Dated: February 2, 1999.

Ralph C. Pisapia,

Assistant Regional Director, Ecological Services.

[FR Doc. 99–2903 Filed 2–5–99; 8:45 am]

BILLING CODE 4310–55–M

DEPARTMENT OF THE INTERIOR

Bureau of Indian Affairs

Indian Gaming

AGENCY: Bureau of Indian Affairs, Interior.

ACTION: Notice of approved Tribal-State Compact.

SUMMARY: Pursuant to Section 11 of the Indian Gaming Regulatory Act of 1988, Pub. L. 100-497, 25 U.S.C. 2710, the Secretary of the Interior shall publish, in the **Federal Register**, notice of approved Tribal-State Compacts for the purpose of engaging in Class III (casino) gambling on Indian reservations. The Assistant Secretary—Indian Affairs, Department of the Interior, through his delegated authority, has approved the Omaha Tribe of Nebraska and the State of Iowa Gaming Compact, which was executed on December 10, 1998.

DATES: This action is effective on February 8, 1999.

FOR FURTHER INFORMATION CONTACT: George T. Skibine, Director, Indian Gaming Management Staff, Bureau of Indian Affairs, Washington, DC 20240, (202) 219–4066.

Dated: January 27, 1999.

Kevin Gover,

Assistant Secretary—Indian Affairs.

[FR Doc. 99–2912 Filed 2–5–99; 8:45 am]

BILLING CODE 4310–02–P

DEPARTMENT OF THE INTERIOR

Bureau of Land Management

[UT–060–09–3800–00, UTU–72499]

Notice of Final Decision; Lisbon Valley Copper Project, San Juan County, UT

AGENCY: Bureau of Land Management, Department of the Interior.

ACTION: Notice of final decision prepared for Summo USA Corporations's Lisbon Valley Open Pit Copper Mine in San Juan County, Utah.

SUMMARY: Interior Board of Land Appeals (Board) decision dated September 23, 1998 (*National Wildlife Federation, et. al.,* 145 IBLA 348), affirmed in part the Bureau of Land Management's (BLM) Record of Decision (ROD) of March 26, 1997, approving the Lisbon Valley Copper Project, but set aside and remanded in part a section of that decision dealing with analysis of a backfill alternative for that project.

In that decision, the Board concluded that the record did not support BLM's rejection of the Open Pit Backfilling

Alternative in the ROD based on concerns for impacts on water quality from acid generating material. The Board further recognized that while concerns regarding impacts from alkaline conditions may be legitimate, those concerns were not sufficiently stated in the ROD or the Final Environmental Impact Statement (FEIS) so as to serve as the principal basis for complete rejection of the alternative (145 IBLA at 374). The Board remanded that portion of the ROD and directed BLM to reconsider the backfill alternative.

The BLM has conducted the analysis directed by the Board, summarized in a memorandum dated January 25, 1999, from the Moab Field Office to the Utah State Director. While the FEIS and ROD contained analyses of multiple complex geochemical and geohydrologic technical issues, the re-analysis of data summarized in this memorandum confirmed BLM's concerns expressed in the FEIS and ROD that potential alkaline conditions in the post-mining pit lakes could mobilize and transport metal oxyanions from mine waste material utilized as pit backfill material into underlying groundwater at the mine site. The data indicates that such mobilization and transport has a significant likelihood of adversely impacting groundwater quality and violating acceptable water quality standards.

As reflected in the FEIS and ROD, the BLM retains the authority to further analyze backfilling if the results of required life-of-the-mine waste rock sampling and hydrologic testing reveals additional adverse impacts not foreseen or predicted in the EIS, and/or indicates that the potential impact of metal oxyanion mobilization and transport associated with backfilling is overestimated. Any additional consideration of backfilling, and potential changes in environmental consequences resulting from such action, would be subject to additional analysis under provisions of the National Environmental Policy Act.

Based on the re-analysis of data as directed by IBLA and the conclusion that BLM's rationale for rejecting the backfill alternative was sound and reasoned, BLM has determined that no modifications or changes are required in the ROD. Furthermore, since none of the data or additional analyses performed to date identify environmental impacts not previously identified in the FEIS, no additional analysis is warranted under provisions of the National Environmental Policy Act.

This Notice of Final Decision is BLM's final decision regarding the approval of the Lisbon Valley Copper Project pursuant to direction given by the Board in its September 23, 1998, decision, to reconsider the Backfill Alternative. The Moab Field Office memorandum of January 25, 1999, is available at the Moab Field Office of the BLM at 82 East Dogwood, Moab, Utah 84532, (435–259–6111).

DATES: Parties adversely affected by this Notice of Final Decision have until March 10, 1999, to file a Notice of Appeal (43 CFR 4.411 and 4.413). The decision to approve the mining operation in relation to the original decision regarding rejection of the Open Pit Backfill Alternative is in full force and effect, effective on the date of this publication of the Notice of Availability of the Record of Decision (43 CFR 3809.4(f). A petition for a stay of the decision may be filed in accordance with the above cited regulations.

ADDRESSES: A Notice of Appeal should be addressed to: Bill Lamb, Utah State Director, Bureau of Land Management, PO Box 45155, 324 South State Street, Room 301, Salt Lake City, Utah, 84111.

FOR FURTHER INFORMATION CONTACT: Lynn Jackson, Project Coordinator, Moab Field Office, Bureau of Land Management, 82 East Dogwood Avenue, Moab, Utah, 84532, (435) 259–6111.

Dated: February 1, 1999.

Brad Palmer,

Associate Moab Field Office Manager, Bureau of Land Management.

[FR Doc. 99–2856 Filed 2–5–99; 8:45 am]

BILLING CODE 4310–DQ–P

DEPARTMENT OF THE INTERIOR

Bureau of Land Management

[CO–030–09–1010–00–1784]

Southwest Resource Advisory Council Meeting

AGENCY: Bureau of Land Management, Interior.

ACTION: Notice; Resource Advisory Council meeting.

SUMMARY: Notice is hereby given that the Southwest Resource Advisory Council (Southwest RAC) will meet at Ridgway State Park, Colorado.

DATES: The meeting will be held on Thursday, March 11, 1999.

ADDRESSES: For additional information, contact Roger Alexander, Bureau of Land Management (BLM), Southwest Center, 2465 South Townsend Avenue, Montrose, Colorado 81401; telephone 970–240–5335; TDD 970–240–5366; e-mail r2alexan@co.blm.gov.

SUPPLEMENTARY INFORMATION: The March 11, 1999, meeting will begin at 9:00 a.m. at Ridgway State Park Headquarters (Dutch Charlie entrance)approximately 21 miles south of Montrose or five miles north of Ridgway on U.S. Highway 550. The agenda will include discussions on Colorado water rights and the Black Canyon National Monument's reserved water right, and an update on the North Fork Coal EIS. Public comment is scheduled for 1:00 p.m.

All Resource Advisory Council meetings are open to the public. Interested persons may make oral statements to the Council, or written statements may be submitted for the Council's consideration. If necessary, a per-person time limit may be established by the Southwest Center Manager.

Summary minutes for Council meetings are maintained in the Southwest Center Office and on the Internet at http://www.co.blm.gov/mdo/mdo__sw__rac.htm and are available for public inspection and reproduction within thirty (30) days following each meeting.

Dated: January 29, 1999.

Roger Alexander,

Public Affairs Specialist.

[FR Doc. 99–2943 Filed 2–5–99; 8:45 am]

BILLING CODE 4310–JB–P

DEPARTMENT OF THE INTERIOR

Bureau of Land Management

[WO–200–09–1020–00]

Science Advisory Board; Public Meeting

AGENCY: Bureau of Land Management, Interior.

ACTION: Notice of public meeting.

SUMMARY: The Bureau of Land Management (BLM) announces a public meeting of the Science Advisory Board to examine the use of science for improving the management of the Nation's public land and resources. Topics of discussion will include the BLM's National Applied Resource Sciences Center, research needs for integrated weed management, and research associated with population management of wild horses and burros.

DATES: BLM will hold the public meeting on Thursday, March 4, 1999, from 11 am to 5 pm, local time.

ADDRESSES: BLM will hold the public meeting in the Nevada Room C–204 of the Bureau of Land Management's National Training Center (NTC), 9828 N

31st Avenue, Phoenix, Arizona. Receptionist, (602) 906–5500.

FOR FURTHER INFORMATION CONTACT: Christine Jauhola, Bureau of Land Management, 1849 C Street, NW, LSB–204, Washington, DC 20240, (202) 452–7761.

SUPPLEMENTARY INFORMATION: This notice is published in accordance with section 9(a)(2) of the Federal Advisory Committee Act of 1972 (Pub. L. 92–463).

I. The Agenda for the Public Meeting Is as Follows

11:00 am Welcome, introductions
Review Minutes of Previous Meeting
Report from Deputy Assistant Secretary for Land and Minerals Management (Acting)
11:30 am Report from the Bureau of Land Management
12:00 Noon Wild Horse and Burro Advisory Committee
Immuno-contraceptive Study
Population modeling for genetic viability
1:00 pm Lunch
1:30 pm National Applied Resource Sciences Center
2:30 pm Research Needs Review and Budget Process
3:30 pm Science Needs for Integrated Weeds Management
4:30 pm Public Comments
4:45 pm Next Meeting and Other Items
5:00 pm Adjourn

II. Public Comment Procedures

Participation in the public meeting is not a prerequisite for submittal of written comments from all interested parties. Your written comments should be specific and explain the reason for any recommendation. BLM appreciates any and all comments, but those most useful and likely to influence decisions on BLM's use of science are those that are either supported by quantitative information or studies or those that include citations to and analyses of applicable laws and regulations. Except for comments provided in electronic format, commenters should submit two copies of their written comments, where practicable. BLM will not necessarily consider comments received after the time indicated under the **DATES** section or at locations other than that listed in the **ADDRESSES** section.

In the event there is a request under the Freedom of Information ACT (FOIA) for a copy of your comments, we intend to make them available in their entirety, including your name and address (or your e-mail address if you file electronically). However, if you do not want us to release your name and address (or e-mail address) in response to a FOIA request, you must state this prominently at the beginning of your comment. We will honor your wish to the extent allowed by law. All submissions from organizations or businesses, and from individuals identifying themselves as representatives or officials of organizations of businesses, will be released in their entirety, including names and addresses (or e-mail addresses).

Electronic Access and Filing Address: Commenters may transmit comments electronically via the Internet to: cjauhola@wo.blm.gov. Please include the identifier ''Science3'' in the subject of your message and your name and address in the body of your message.

III. Accessibility

The meeting sites are accessible to individuals with disabilities. An individual with a disability who will need an auxiliary aid or service to participate in the hearing, such as interpreting service, assistive listening device, or materials in an alternate format, must notify the person listed under **FOR FURTHER INFORMATION CONTACT** two weeks before the scheduled hearing date. Although BLM will attempt to meet a request received after that date, the requested auxiliary aid or service may not be available because of insufficient time to arrange it.

Dated: February 2, 1999.

Christine A. Jauhola,

Group Manager, Fish, Wildlife and Forest Group.

[FR Doc. 99–2871 Filed 2–5–99; 8:45 am]

BILLING CODE 4310–84–P

DEPARTMENT OF THE INTERIOR

Bureau of Land Management

[NM–030–1430–00; NMNM 96531 & NMNM 98501]

Notice of Realty Action; Recreation and Public Purposes (R&PP) Act Classification; New Mexico

AGENCY: Bureau of Land Management (BLM), Interior.

ACTION: Notice of realty action; R&PP Act classification.

SUMMARY: The following public land in Dona Ana County, New Mexico, has been examined and found suitable for classification for conveyance to the City of Sunland Park, New Mexico, and the Catholic Diocese of Las Cruces, New Mexico, under the provisions of the R&PP Act, as amended (43 U.S.C. 869 *et seq.*). Sunland Park has made application to acquire 138.88 acres (Parcel 1) of public land to be used for recreational purposes. The Catholic Diocese of Las Cruces has made application to acquire 67.10 acres (Parcel 2) of public land to maintain an existing path that leads to a religious shrine, develop rest stops and picnic areas, add shrines/prayer stops, and preserve the remaining pristine qualities of the area.

Parcel 1

T. 29 S., R. 4 E., NMPM
Sec. 17, Lots 6 to 9, inclusive, W½E½NE¼, SW¼NE¼.
Containing 138.88 acres, more or less.

Parcel 2

T. 29 S., R. 4 E., NMPM
Sec. 16, S½NW¼NW¼;
Sec. 17, Lot 7, E½E½NE¼.
Containing 67.60 acres, more or less.

The land is difficult and uneconomic to manage and is not required for any other Federal purpose. The classification and subsequent conveyance is consistent with the Las Cruces Field Office's Mimbres Resource Management Plan of December, 1993, and would be in the public interest.

DATES: Comments regarding the proposed lease/conveyance or classification must be submitted on or before March 29, 1999.

ADDRESSES: Comments should be sent to the Bureau of Land Management, Las Cruces Field Office, 1800 Marquess, Las Cruces, New Mexico 88005.

FOR FURTHER INFORMATION CONTACT: Juan Padilla, at the address above or at (505) 525–4376.

SUPPLEMENTARY INFORMATION: The patents when issued will be subject to the following terms, conditions and reservations:

1. Provisions of the R&PP Act and all applicable regulations of the Secretary of the Interior.

2. A right-of-way thereon for ditches and canals constructed by the authority of the United States, Act of August 30, 1890 (43 U.S.C. 945).

3. All minerals shall be reserved to the United States, together with the right to prospect for, mine, and remove such deposits from the same under application of law and such regulations as the Secretary may prescribe.

4. The conveyance will be subject to all valid rights and reservations of record. Upon publication of this notice in the **Federal Register**, the land will be segregated from all other forms of appropriation under the public land laws, including the general mining laws, except for conveyance under the R&PP Act and leasing under the mineral

leasing laws. The segregative effect will terminate upon issuance of a patent or as specified in an opening order to be published in the **Federal Register**, whichever comes first.

Detailed information concerning this action is available for review at the BLM, Las Cruces Field Office. On or before March 29, 1999, interested persons may submit comments regarding the proposed classification or conveyance of the land to the Field Office Manager, Las Cruces Field Office, 1800 Marquess, Las Cruces, New Mexico, 88005. The land would not be offered for conveyance for at least 60 days after the date of publication of this Notice in the **Federal Register**.

Classification Comments.

Interested parties may submit comments involving the suitability of the land for the purposes described above. Comments on the classification are restricted to whether the land is physically suited for the proposal, whether the use will maximize the future use or uses of the land, whether the use is consistent with local planning and zoning, or if the use is consistent with State and Federal programs.

Application Comments

Interested parties may submit comments regarding the specific use proposed in the application and plan of development, whether the BLM followed proper administrative procedures in reaching the decision, or any other factor not directly related to the suitability of the land for the purposes described above. Comments received on the classification will be answered by the State Director with the right to further comment to the Secretary. Comments on the application will be answered by the State Director with the right to appeal to the Interior Board of Land Appeals.

In the absence of any adverse comments, the classification of the lands described in this Notice will become effective 60 days from the date of publication in the **Federal Register**.

Dated: February 2, 1999.

Linda S.C. Rundell,

Field Manager, Las Cruces.

[FR Doc. 99–2906 Filed 2–5–99; 8:45 am]

BILLING CODE 4310–VC–P

DEPARTMENT OF THE INTERIOR

National Park Service

Notice of Extension for the Spruce Creek Access Proposal, Draft Environmental Impact Statement, Denali National Park and Preserve, Alaska

SUMMARY: The National Park Service (NPS) is preparing an environmental impact statement (EIS) to evaluate an application for access to a private inholding on Spruce Creek in the Kantishna Hills of Denali National Park and Preserve, as announced in the **Federal Register**/Vol. 63, No. 53/ Thursday, March 19, 1998. The owner of the inholding submitted an application for the right-of-way pursuant to the Alaska National Interest Lands Conservation Act of 1980 (ANILCA), Title XI, Section 1110(b) and the implementing regulations at 43 CFR Part 36. The application states that the right-of-way would provide access in the form of a road and airstrip for the inholder to construct and operate a remote backcountry lodge. On January 7, 1998, the NPS accepted an application for access to a 20-acre parcel on Spruce Creek. The applicants amended the request for access on January 26, 1998, to request a revised location of an airstrip.

The NPS provided notice on Tuesday, October 6, 1998 (FR/ Vol. 63, No. 193) stating an additional three months was needed to complete the draft EIS, and extended the release date from October 26, 1998 to January 26, 1999. The applicants continue to modify and clarify the project proposal. The NPS needs additional time to analyze these modifications and clarifications. The NPS also requires an extension to otherwise complete the EIS. For these reasons, the NPS is extending the previous proposed dates of publication and distribution of the draft EIS by approximately three months.

DATES: The draft EIS will be available for public review on or about April 30, 1999.

FOR FURTHER INFORMATION CONTACT: Stephen P. Martin, Superintendent, Denali National Park and Preserve, P.O. Box 9, Denali Park, Alaska 99755. Telephone (907) 683–2294.

Robert D. Barbee,

Regional Director, Alaska Region.

[FR Doc. 99–2881 Filed 2–5–99; 8:45 am]

BILLING CODE 4310–70–P

DEPARTMENT OF THE INTERIOR

National Park Service

Subsistence Resource Commission Meeting

SUMMARY: The Superintendent of Denali National Park and Preserve and the Chairperson of the Denali Subsistence Resource Commission announce a forthcoming meeting of the Denali National Park Subsistence Resource Commission. The following agenda items will be discussed:

(1) Call to order by the Chair.
(2) Roll call and confirmation of quorum.
(3) Superintendent's welcome and introductions.
(4) Approval of minutes of last meeting.
(5) Additions and corrections to the agenda.
(6) New Business:
  a. Annual SRC Chair's meeting update.
  b. Federal subsistence program update.
  c. Review hunting regulation proposals, FY99–00
  d. Temporary snowmachine closure, former Mt. McKinley Park.
  e. Agency reports and wildlife updates.
(7) Old Business:
  a. Final draft Subsistence User Guide.
  b. Draft Denali Subsistence Management Plan.
  c. Spruce Four access EIS, subsistence review.
(8) Public and other agency comments.
(9) Set time and place of next SRC meeting.
(10) Adjournment.

DATES: The meeting date is: Friday, February 26, 1999, 8:30 a.m. to 5 p.m.

ADDRESSES: The meeting location is: North Star Inn, Conference Room, Healy, Alaska.

FOR FURTHER INFORMATION CONTACT: Hollis Twitchell, Subsistence Coordinator, Denali National Park, P.O. Box 9, Denali Park, Alaska 99755. Phone (907) 683–9544.

SUPPLEMENTARY INFORMATION: The Subsistence Resource Commissions are authorized under Title VIII, Section 808, of the Alaska National Interest Lands Conservation Act, Pub. L. 96–487, and operates in accordance with the provisions of the Federal Advisory Committees Act.

Paul R. Anderson,

Deputy Regional Director.

[FR Doc. 99–2880 Filed 2–5–99; 8:45 am]

BILLING CODE 4310–70–P

DEPARTMENT OF THE INTERIOR

Bureau of Reclamation

Glen Canyon Technical work Group

AGENCY: Bureau of Reclamation, Interior.

ACTION: Notice of public meeting.

SUMMARY: The Glen Canyon Technical Work Group (TWG) was formed as an official subcommittee of the Glen Canyon Adaptive Management Work Group (AMWG) on September 10, 1997. The TWG members were named by the members of the AMWG and provide advice and information to the AMWG to act upon. The AMWG uses this information to form recommendations to the Secretary of the Interior (Secretary) for guidance of the Grand Canyon Monitoring and Research Center science program and other direction as requested by the Secretary. All meetings are open to the public; however, seating is limited and is available on a first come, first served basis.

Dates and Location: The TWG public meeting will be held on the following dates and location:

Phoenix, Arizona—February 23–24, 1999. The meeting will begin at 10:00 a.m. and conclude at 4:00 p.m. on the first day and begin at 8:00 a.m. and conclude at 4:00 p.m. on the second day. The two-day meeting will be held at the Arizona Department of Water Resources, 500 North 3rd Street, Phoenix, Arizona.

Agenda: The purpose of the meeting is to review the Fiscal Year 2000 Annual Plan for the Grand Canyon Monitoring and Research Center.

Time will be allowed on the agenda for any organization or individual wishing to make formal oral comments (limited to 10 minutes) at the meeting, but written notice must be provided to Mr.. Bruce Moore, Bureau of Reclamation, Upper Colorado Regional Office, 125 South State Street, Room 6107, Salt Lake City, Utah 84138–1102, telephone (801) 524–3702, faxogram (801) 524–5499, E-mail at: bmoore@uc.usbr.gov at least FIVE (5) days prior to the meeting. Any written comments received will be provided to the TWG members at the meeting.

FOR FURTHER INFORMATION CONTACT: Bruce Moore, telephone (801) 524–3702, faxogram (801) 524–5499, E-mail at: bmoore@uc.usbr.gov.

Dated: February 3, 1999.

Eluid L. Martinez,

Commissioner, Bureau of Reclamation.

[FR Doc. 99–2969 Filed 2–5–99; 8:45 am]

BILLING CODE 4310–94–M

NATIONAL AERONAUTICS AND SPACE ADMINISTRATION

[Notice 99–026]

Notice of Prospective Patent License

AGENCY: National Aeronautics and Space Administration.

ACTION: Notice of prospective patent license.

SUMMARY: NASA hereby gives notice that GeoTech Chemical Company, Inc. of Tallmadge, Ohio has requested an exclusive license to practice the invention described and claimed in NASA Case No. KSC–11940, entitled ''Conducting Compositions of Matter,'' which is assigned to the United States of America as represented by the Administrator of the National Aeronautics and Space Administration. Written objections to the prospective grant of a license should be sent to John F. Kennedy Space Center.

DATES: Responses to this notice must be received by April 9, 1999.

FOR FURTHER INFORMATION CONTACT: Ms. Beth A. Vrioni, Patent Counsel, John F. Kennedy Space Center, Mail Code MM–E, Kennedy Space Center, FL 32899; telephone (407) 867–6225.

Dated: February 1, 1999.

Edward A. Frankle,

General Counsel.

[FR Doc. 99–2849 Filed 2–5–99; 8:45 am]

BILLING CODE 7510–01–P

NATIONAL AERONAUTICS AND SPACE ADMINISTRATION

[Notice 99–025]

Notice of Prospective Patent License

AGENCY: National Aeronautics and Space Administration.

ACTION: Notice of prospective patent license.

SUMMARY: NASA hereby gives notice that GeoTech Chemical Company, Inc. of Tallmadge, Ohio has requested an exclusive license to practice the invention described and claimed in U.S. Patent No. 5,658,649, entitled ''Corrosion Resistant Coating,'' which is assigned to the United States of America as represented by the Administrator of the National Aeronautics and Space Administration. Written objections to the prospective grant of a license should be sent to John F. Kennedy Space Center.

DATES: Responses to this notice must be received by April 9, 1999.

FOR FURTHER INFORMATION CONTACT: Ms. Beth A. Vrioni, Patent Counsel, John F. Kennedy Space Center, Mail Code MM–E, Kennedy Space Center, FL 32899; telephone (407) 867–6225.

Dated: February 1, 1999.

Edward A. Frankle,

General Counsel.

[FR Doc. 99–2850 Filed 2–5–99; 8:45 am]

BILLING CODE 7510–01–P

NATIONAL SCIENCE FOUNDATION

Special Emphasis Panel in Bioengineering and Environmental Systems; Notice of Meeting

In accordance with the Federal Advisory Committee Act (Pub. L. 92–463, as amended), the National Science Foundation announces the following meeting.

Name: Special Emphasis Panel in Bioengineering and Environmental Systems (No. 1189).

Date and Time: February 23, 1999; 8:00 am–5:00 pm.

Place: National Science Foundation, 4201 Wilson Boulevard, Room 370 & 390, Arlington, VA 22230.

Type of Meeting: Closed.

Contact Person: Janice M. Jenkins and Sohi Rastegar, Program Directors, Biomedical Engineering and Research to Aid Persons with Disabilities, Division of Bioengineering and Environmental Systems, National Science Foundation, 4201 Wilson Boulevard, Arlington, VA 22230, Telephone: (703) 306–1318.

Purpose of Meeting: To provide advice and recommendations concerning proposals submitted to NSF for financial support.

Agenda: To review and evaluate proposals as part of the selection process for awards.

Reason for Closing: The proposals being reviewed include information of a proprietary or confidential nature, including technical information; financial data, such as salaries; and personal information concerning individuals associated with the proposals. These matters are exempt under 5 U.S.C. 552b(c), (4) and (6) of the Government in the Sunshine Act.

Dated: February 2, 1999.

Linda Allen-Benton,

Acting Director, Division of Human Resource Management.

[FR Doc. 99–2841 Filed 2–5–99; 8:45 am]

BILLING CODE 7555–01–M

NATIONAL SCIENCE FOUNDATION

Special Emphasis Panel in Design, Manufacture, and Industrial Innovation; Notice of Meeting

In accordance with the Federal Advisory Committee Act (Pub. L. 92–463, as amended), the National Science Foundation announces the following meeting:

Name: Special Emphasis Panel in Design, Manufacture, and Industrial Innovation (1194).

Date and Time: February 18 and 19, 1999, 8:30 a.m.–5:00 p.m.

Place: Room #320 National Science Foundation, 4201 Wilson Boulevard, Arlington, VA 22230.

Type of Meeting: Closed.

Contact Persons: G. Patrick Johnson, Program Manager, Small Business Office, (703) 306–1395; National Science Foundation, 4201 Wilson Boulevard, Arlington, VA 22230.

Purpose of Meeting: To provide advice and recommendations concerning proposals submitted to the National Science Foundation's SBIR Program.

Agenda: To review and evaluate SBIR Phase II proposals as part of the selection process for awards.

Reason for Closing: The proposals being reviewed include information of a proprietary or confidential nature, including technical information, financial data such as salaries, and personal information concerning individuals associated with the proposals. These matters are exempt under 5 USC 552b(c)(4) and (6) of the Government in the Sunshine Act.

Dated: February 2, 1999.

Linda Allen-Benton,

Acting Director, Division of Human Resource Management.

[FR Doc. 99–2836 Filed 2–5–99; 8:45 am]

BILLING CODE 7555–01–M

NATIONAL SCIENCE FOUNDATION

Special Emphasis Panel in Design, Manufacturing, and Industrial Innovation, Notice of Meeting

In accordance with the Federal Advisory Committee Act (Pub. L. 92–463, as amended), the National Science Foundation announces the following meetings:

Name: Design, Manufacturing, and Industrial Innovation (1194).

Date and Time: February 16 and 22, 1999.

Place: Room 360, National Science Foundation, 4201 Wilson Blvd., Arlington, VA.

Type of Meeting: Closed.

Contact Person: Darryl Gorman, Program Manager, Small Business Innovation Research and Small Business Technology Transfer Programs, Room 550, Division of Design, Manufacturing, and Industrial Innovation, National Science Foundation, 4201 Wilson Boulevard, VA 22230, Telephone (703) 306–1395.

Purpose of Meeting: To provide advice and recommendations concerning proposals submitted to NSF for financial support.

Agenda: To review and evaluate proposals submitted to the Small Business Innovation Research (SBIR) and Small Business Technology Transfer Programs as part of the selection process for awards.

Reason for Closing: The proposals being reviewed include information of a proprietary or confidential nature, including technical information; financial data, such as salaries, and personal information concerning individuals associated with the proposal. These matters are exempt under 5 U.S.C. 552b(c)(4) and (6) of the Government in the Sunshine Act.

Dated: February 2, 1999.

Linda Allen-Benton,

Acting Director, Division of Human Resource Management.

[FR Doc. 99–2840 Filed 2–5–99; 8:45 am]

BILLING CODE 7555–01–M

NATIONAL SCIENCE FOUNDATION

Special Emphasis Panel in Human Resource Development; Notice of Meeting

In accordance with the Federal Advisory Committee Act (Pub. L. 92–463, as amended), the National Science Foundation announces the following meeting.

Name and Committee Code: Special Emphasis Panel in Human Resource Development (#1199).

Date and Time: February 22, 1999, 8:30 a.m. to 5:00 p.m.

Place: National Science Foundation, 4201 Wilson Boulevard, Room 360, Arlington, VA 22230.

Type of Meeting: Closed.

Contact Person: Dr. A. James Hicks & Dr. Victor Santiago, Program Director, Human Resource Development Division, Room 815, National Science Foundation, 4201 Wilson Boulevard, Arlington, VA 22230 Telephone: (703) 306–1632.

Purpose of Meeting: To provide advice and recommendations concerning proposals submitted to NSF for Continuation of financial support.

Agenda: Review for the Louis Stokes Alliances for Minority Participation Reverse Site Visit.

Reason for Closing: The proposals being reviewed include information of a proprietary or confidential nature, including technical information; financial data, such as salaries; and personal information concerning individuals associated with the proposals. These matters are exempt under 5 U.S.C. 552b(c), (4) and (6) of the Government in the Sunshine Act.

Dated: February 2, 1999.

Linda Allen-Benton,

Acting Division Director, Division of Human Resource Management.

[FR Doc. 99–2837 Filed 2–5–99; 8:45 am]

BILLING CODE 7555–01–M

NATIONAL SCIENCE FOUNDATION

Special Emphasis Panel in Materials Research; Notice of Meeting

In accordance with the Federal Advisory Committee Act (Pub. L. 92–463, as amended), the National Science Foundation announces the following meetings:

Name: Special Emphasis Panels in Materials Research (1203).

Date & Time: February 15, 16, 17, and 19; 8:00 am–5:00 pm.

Place: Room 1060, National Science Foundation, 4201 Wilson Blvd., Arlington, VA.

Type of Meeting: Closed.

Contact Person: Dr. Liselotte J. Schioler, Program Director, Division of Materials Research, Room 1065.41, National Science Foundation, 4201 Wilson Blvd., Arlington, VA 22230, (703) 306–1836.

Purpose of Meeting: To provide advice and recommendations concerning proposals submitted to NSF for financial support.

Agenda: To review and evaluate proposals submitted to the Ceramics Programs as part of the selection process for awards.

Reason for Closing: The proposals being reviewed include information of a proprietary or confidential nature, including technical information; financial data, such as salaries, and personal information concerning individuals associated with the proposals. These matters are exempt under 5 U.S.C. 552b(c), (4) and (6) of the government in the Sunshine Act.

Dated: February 2, 1999.

Linda Allen-Benton,

Acting Director, Division of Human Resource Management.

[FR Doc. 99–2835 Filed 2–5–99; 8:45 am]

BILLING CODE 7555–01–M

NATIONAL SCIENCE FOUNDATION

Special Emphasis Panel; Notice of Meeting

In accordance with the Federal Advisory Committee Act (Pub. L. 92–463, as amended), the National Science Foundation announces the following meeting.

Name: Special Emphasis Panel in Physics (1208).

Date and Time: February 22–24, 1999; 8:30 am—5:00 pm.

Place: National Science Foundation, 4201 Wilson Blvd., Arlington, VA 22230, Rm. 1020.

Type of Meeting: Closed.

Contact Person: Dr. Winston Roberts, Program Director for Theoretical Physics, Division of Physics, Rm. 1015; Telephone: 306–1890.

Purpose of Meeting: To provide advice and recommendations concerning proposals submitted to the Theoretical Physics Mathematics Program at NSF for financial support.

Agenda: To review and evaluate proposals as part of the selection process for awards.

Reason for Closing: The proposals being reviewed include information of a propriety or confidential nature, including technical information; information on personnel and proprietary date for present and future subcontracts. These matters are exempt

under 5 U.S.C. 552b(c), (4) and (6) of the Government in the Sunshine Act.

Dated: February 2, 1999.

Linda Allen-Benton,

Acting Director, Division of Human Resource Management.

[FR Doc. 99–2839 Filed 2–5–99; 8:45 am]

BILLING CODE 7555–01–M

NATIONAL SCIENCE FOUNDATION

Advisory Panel for Physiology and Ethology: Notice of Meeting

In accordance with the Federal Advisory Committee Act (Pub. L. 92–463, as amended), the National Science Foundation announces the following meeting.

Name: Advisory Panel for Physiology and Ethology (1160).

Date and Time: February 17–19, 1999.

Place: National Science Foundation, 4201 Wilson Boulevard, Arlington, VA 22330, Room 340.

Type of Meeting: Part-Open.

Contact Persons: Dr. Zoe Eppley or Dr. Kim Williams, Program Directors, Ecological and Evoluationary Physiology, or Dr. Penny Kukuk, Program Director, Animal Behavior, Division of Integrative Biology and Neuroscience, Suite 685, National Science Foundation, 4201 Wilson Boulevard, Arlington, VA 22230, Telephone: (703) 306–1421.

Purpose of Meeting: To provide advice and recommendations concerning proposals submitted to NSF for financial support.

Agenda: Open Session: February 19, 1999, 10 am–11 am—discussion on research trends, opportunities and assessment procedures in Physiology and Ethology.

Closed Session: February 17, 1999, 8:30 am–5:00 pm, February 18, 1999, 8:30 am–6:00 pm, February 19, 1999, 8:30 am–10am and 11 am–5:00 pm.

Reason for Closing: The proposals being reviewed include information of a proprietary or confidential nature, including technical information; financial data such as salaries, and personal information concerning individuals associated with the proposals. These matters are exempt under the 5 U.S.C. 552b(c), (4) and (6) of the Government in the Sunshine Act.

Dated: February 2, 1999.

Linda Allen-Benton,

Acting Director, Division of Human Resource Management.

[FR Doc. 99–2838 Filed 2–5–99; 8:45 am]

BILLING CODE 7555–01–M

NATIONAL SCIENCE FOUNDATION

Advisory Panel for Systematic and Population Biology

In accordance with the Federal Advisory Committee Act (Pub. L. 92–463, as amended), the National Science Foundation announces the following meetings.

Name: Advisory for Systematic and Population Biology (1753).

Date and Time: February 17–19, 1999, 8:30 am–5 pm.

Place: Room 380, National Science Foundation, 4201 Wilson Boulevard, Arlington, VA 22230. Telephone (703) 306–1483.

Agenda: To review and evaluate Biotic Survey and Inventory proposals as part of the selection process for awards.

Type of Meetings: Closed.

Contact Person: Dr. Douglas Siegal Causey, Division of Environmental Biology, Room 635, National Science Foundation, 4201 Wilson Boulevard, Arlington, VA 22230. Telephone (703) 306–1483.

Purpose of Meetings: To provide advice and recommendations concerning support for research proposals submitted to NSF for financial support.

Reason for Closing: The proposals being reviewed include information of a proprietary or confidential nature, including technical information; financial data such as salaries, and personal information concerning individuals associated with the proposals. These matters are exempt under 5 U.S.C. 552b(c) (4) and (6) of the Government in the Sunshine Act.

Dated: February 2, 1999.

Linda Allen-Benton,

Acting Director, Division of Human Resource Management.

[FR Doc. 99–2842 Filed 2–5–99; 8:45 am]

BILLING CODE 7555–01–M

NUCLEAR REGULATORY COMMISSION

[Docket No. 50–395]

South Carolina Electric & Gas Company (SCE&G), South Carolina Public Service Authority; Notice of Withdrawal of Application for Amendment to Facility Operating License

The U.S. Nuclear Regulatory Commission (the Commission) has granted the request of South Carolina Electric & Gas Company (the licensee) to withdraw its March 19, 1996, application for proposed amendment to Facility Operating License No. NPF–12 for Virgil C. Summer Nuclear Station, Unit No. 1 located in Fairfield County, South Carolina.

The proposed amendment would have revised the quadrant power tilt ratio technical specification format.

The Commission had previously issued a Notice of Consideration of Issuance of Amendment published in the **Federal Register** on April 10, 1996 (61 FR 15995). However, by letter dated May 11, 1998, the licensee withdrew the proposed change.

For further details with respect to this action, see the application for amendment dated March 19, 1996, and the licensee's letter dated May 11, 1998, which withdrew the application for license amendment. The above documents are available for public inspection at the Commission's Public Document Room, the Gelman Building, 2120 L Street, NW., Washington, DC, and at the local public document room located at the Fairfield County Library, 300 Washington Street, Winnsboro, SC 29180.

Dated at Rockville, Maryland, this 29th day of January 1999.

For the Nuclear Regulatory Commission.

L. Mark Padovan,

Project Manager, Project Directorate II–2, Division of Reactor Projects—I/II, Office of Nuclear Reactor Regulation.

[FR Doc. 99–2948 Filed 2–5–99; 8:45 am]

BILLING CODE 7590–01–P

NUCLEAR REGULATORY COMMISSION

[Docket Nos. 50–424 and 50–425]

Southern Nuclear Operating Company, Inc., et al.; Notice of Partial Denial of Amendments to Facility Operating Licenses and Opportunity for Hearing

The U.S. Nuclear Regulatory Commission (the Commission) has denied a request by Southern Nuclear Operating Company, Inc., et al., (the licensee) for amendments to Facility Operating License Nos. NPF–68 and NPF–81 issued to the licensee for operation of the Vogtle Electric Generating Plant, Unit Nos. 1 and 2, located in Burke County, Georgia. Notice of Consideration of Issuance of the amendments was published in the **Federal Register** on October 7, 1998 (63 FR 53955).

The purpose of the licensee's amendment request was to revise the Technical Specifications (TS) to: (1) eliminate the requirement for operability of system level manual initiation, and automatic initiation, for closure of the containment purge supply and exhaust isolation valves during core alteration and/or movement or irradiated fuel assemblies within containment; (2) allow the equipment hatch and emergency air lock to be open during core alterations, and/or movement of irradiated fuel assemblies inside containment; and (3) eliminate the requirements associated with nonredundant condensate storage tanks.

The NRC staff has concluded that the licensee's request, with regard to those changes to the TS that would allow the

equipment hatch to be open during core alterations, and/or movement of irradiated fuel inside containment, cannot be granted. The licensee was notified of the Commission's denial of the proposed change by a letter dated January 29, 1999.

By March 10, 1999, the licensee may demand a hearing with respect to the denial described above. Any person whose interest may be affected by this proceeding may file a written petition for leave to intervene.

A request for hearing or petition for leave to intervene must be filed with the Secretary of the Commission, U.S. Nuclear Regulatory Commission, Washington, DC 20555–0001 Attention: Rulemakings and Adjudications Staff, or may be delivered to the Commission's Public Document Room, the Gelman Building, 2120 L Street, NW., Washington, DC, by the above date.

A copy of any petitions should also be sent to the Office of the General Counsel, U.S. Nuclear Regulatory Commission, Washington, DC 20555–0001, and to Mr. Arthur H. Domby, Troutman Sanders, NationsBank Plaza, Suite 5200, 600 Peachtree Street, NE., Atlanta, Georgia, attorney for the licensee.

For further details with respect to this action, see (1) the application for amendments dated June 26, 1998, as supplemented by letters dated September 18 and November 30, 1998, and (2) the Commission's letter to the licensee dated January 29, 1999.

These documents are available for public inspection at the Commission's Public Document Room, the Gelman Building, 2120 L Street, NW., Washington, DC, and at the local public document room located at the Burke County Library, 412 Fourth Street, Waynesboro, Georgia.

Dated at Rockville, Maryland, this 29th day of January, 1999.

For the Nuclear Regulatory Commission.

David Jaffe,

Senior Project Manager, Project Directorate II–2, Division of Reactor Projects—I/II Office of Nuclear Reactor Regulation.

[FR Doc. 99–2950 Filed 2–5–99; 8:45 am]

BILLING CODE 7590–01–P

NUCLEAR REGULATORY COMMISSION

[Docket No. 50–482]

Wolf Creek Nuclear Operating Corporation, Wolf Creek Generating Station; Correction to Notice of Approval of Transfer of Facility Operating License and Issuance of Conforming Amendment, and Opportunity for a Hearing

On January 25, 1999, the Commission issued a Notice of Approval of Transfer of Facility Operating License and Issuance of Conforming Amendment, and Opportunity for a Hearing for the Wolf Creek Generating Station. The Notice was published in the **Federal Register** on January 29, 1999 (64 FR 4726). Column 2, Line 47 incorrectly stated March 1, 1999, as the date by which hearing requests and intervention petitions must be filed. The correct date is February 18, 1999, in accordance with 10 CFR 2.1306(c). In addition, the correct date by which written comments must be filed is March 1, 1999, which was incorrectly published in Column 3, Line 31, as ''1999''.

Dated at Rockville, Maryland, this 2nd day of February 1999.

For the Nuclear Regulatory Commission.

Chester Poslusny,

Senior Project Manager, Project Directorate IV–2, Division of Reactor Projects III/IV, Office of Nuclear Reactor Regulation.

[FR Doc. 99–2949 Filed 2–5–99; 8:45 am]

BILLING CODE 7590–01–P

SECURITIES AND EXCHANGE COMMISSION

Proposed Extension of Existing Collection; Comment Request

Upon Written Request, Copies Available From. Securities and Exchange Commission Office of Filings and Information Services Washington, DC 20549

Extension:

Rule 17a–13, SEC File No. 270–27, OMB Control No. 3235–0035

Rule 11Ab2–1 and Form SIP, SEC File No. 270–23, OMB Control No. 3235–0043

Notice is hereby given that, pursuant to the Paperwork Reduction Act of 1995 (44 U.S.C. 3501 et seq.), the Securities and Exchange Commission (Commission) is soliciting comments on the collections of information summarized below. The Commission plans to submit these existing collections of information to the Office of Management and Budget for extension and approval.

Rule 17a–13(b) generally requires that at least once each calendar quarter, all registered brokers and dealers physically examine and count all securities held and account for all other securities not in their possession, but subject to the broker-dealer's control or direction. Any discrepancies between the broker-dealer's securities count and the firm's records must be noted and, within seven days, the unaccounted for difference must be recorded in the firm's records. Rule 17a–13(c) provides that under specified conditions, the securities count, examination and verification of the broker-dealer's entire list of securities may be conducted on a cyclical basis rather than on a certain date. Although Rule 17a–13 does not require filing a report with the Commission, security count discrepancies must be reported on Form X–17a–5 as required by Rule 17a–5. Rule 17a–13 exempts broker-dealers that limit their business to the sale and redemption of securities of registered investment companies and interests or participation in an insurance company separate account and those who solicit accounts for federally insured savings and loan associations, provided that such persons, promptly transmit all funds and securities and hold no customer funds and securities.

The information obtained from Rule 17a–13 is used as an inventory control device to monitor a broker-dealers' ability to account for all securities held, in transfer, in transit, pledged, loaned, borrowed, deposited or otherwise subject to the firm's control or direction. Discrepancies between the securities counts and the broker-dealer's records alert the Commission and the Self Regulatory Organizations (SROs) to those firms having problems in the their back offices.

Because of the many variations in the amount of securities that broker-dealers are accountable for, it is difficult to develop a meaningful figure for the cost of compliance with Rule 17a–13. Approximately 92% of all registered broker-dealers are subject to Rule 17a–13. Accordingly, approximately 7,156 broker-dealer to comply with the Rule is 100 hours per year, for a total estimated annualized burden of 715,600 hours. It should be noted that a significant number of firms subject to Rule 17a–13 have minimal obligations under the Rule because they do not hold securities. It should further be noted that most broker-dealers would engage in the activities required by Rule 17a–13 even if they were not required to do so.

Rule 11Ab2–1 and Form SIP establish the procedures by which a Securities

Information Processor (SIP) files and amends its SIP registration form. The information filed with the Commission pursuant to Rule 11Ab2–1 and Form SIP is designed to provide the Commission with the information necessary to make the required findings under the Securities Exchange Act of 1934 (Act) before granting the SIP's application for registration. In addition, the requirement that a SIP file an amendment to correct any inaccurate information is designed to assure that the Commission has current, accurate information will respect to the SIP. This information is also made available to members of the public.

Only exclusive SIPs are required to register with the Commission. An exclusive SIP is an SIP that engages on an exclusive basis on behalf of any national securities exchange or registered securities association, or any national securities exchange or registered securities association which engages on an exclusive basis on its own behalf, in collecting, processing, or preparing for distribution or publication, any information with respect to (i) transactions or quotations on or effective or made by means of any facility of such exchange or (ii) quotations distributed or published by means of any electronic quotation system operated by such association. The Federal securities laws require that before the Commission may approve the registration of an exclusive SIP, it must make certain mandatory findings. It takes a SIP applicant approximately 400 hours to prepare documents which include sufficient information to enable the Commission to make those findings. Currently, there are only two exclusive SIPs registered with the Commission. The Securities Information Automation Corporation (SIAC) and the Nasdaq Stock Market, Inc. (Nasdaq). SIAC and Nasdaq are required to keep the information on file with the Commission current, which entails filing a form SIP annually to update information. Accordingly, the annual reporting and recordkeeping burden for Rule 11Ab2–1 and Form SIP is 400 hours. This annual reporting and recordkeeping burden does not include the burden hours or cost of amending a Form SIP because the Commission has already overstated the compliance burdens by assuming that the Commission will receive one initial registration pursuant to Rule 11Ab2–1 on Form SIP a year.

Written comments are invited on: (a) whether the proposed collection of information is necessary for the proper performance of the functions of the agency, including whether the information shall have practical utility; (b) the accuracy of the agency's estimate of the burden of the proposed collection of information, (c) ways to enhance the quality, utility, and clarity of the information collected; and (d) ways to minimize the burden of the collection of information on respondents, including through the use of automated collection techniques or other forms of information technology. Consideration will be given to comments and suggestions submitted in writing within 60 days of this publication.

Please direct your written comments to Michael E. Bartell, Associate Executive Director, Office of Information Technology, Securities and Exchange Commission, 450 5th Street, N.W. Washington, DC 20549.

Dated: January 28, 1999.

Margaret H. McFarland,

Deputy Secretary.

[FR Doc. 99–2892 Filed 2–5–99; 8:45 am]

BILLING CODE 8010–01–M

SECURITIES AND EXCHANGE COMMISSION

[Investment Company Act Release No. 23674; 812–11484]

Gradison Growth Trust, et al.; Notice of Application February 2, 1999

AGENCY: Securities and Exchange Commission (''SEC'').

ACTION: Notice of an application under section 6(c) of the Investment Company Act of 1940 (''Act'') for an exemption from section 15(a) of the Act.

SUMMARY OF THE APPLICATION: The requested order would permit the implementation, without prior shareholder approval, of a new investment subadvisory agreement (''New Agreement'') for a period commencing on the later of the date on which the sale of a controlling interest of the subadviser is consummated or the date the requested order is issued and continuing until the New Agreement is approved or disapproved by shareholders of the investment company (but in no event later than March 22, 1999) (''Interim Period''). The order also would permit, following shareholder approval, the payment to the subadviser of all fees it earns under the New Agreement during the Interim Period.

APPLICANTS: Gradison Growth Trust (''Trust''), McDonald Investments, Inc. (''Adviser''), and Blairlogie Capital Management (''Subadviser'').

FILING DATES: The application was filed on January 27, 1999. Applicants have agreed to file an amendment, the substance of which is included in this notice, during the notice period.

HEARING OR NOTIFICATION OF HEARING: An order granting the application will be issued unless the SEC orders a hearing.

Interested persons may request a hearing by writing to the SEC's Secretary and serving Applicant with a copy of the request, personally or by mail, Hearing requests should be received by the SEC by 5:30 p.m. on February 25,1999 and should be accompanied by proof of service on Applicant in the form of an affidavit or, for lawyers, a certificate of service. Hearing requests should state the nature of the writer's interest, the reason for the request, and the issues contested. Persons may request notification by writing to the SEC's Secretary.

ADDRESSES: Secretary, SEC, 450 Fifth Street, N.W., Washington, D.C. 20549. Applicants, c/o Kirkpatrick & Lockhart, Attn: Robert J. Zutz, Esq. or Francine J. Rosenberger, Esq., 1800 Massachusetts Avenue, NW, Suite 200, Washington, D.C. 20036.

FOR FURTHER INFORMATION CONTACT: Rachel H. Graham, Senior Counsel, at (202) 942–0583, or Nadya B. Roytblat, Assistant Director, at (202) 942–0564 (Division of Investment Management, Office of Investment Company Regulation).

SUPPLEMENTARY INFORMATION: The following is a summary of the application. The complete application may be obtained for a fee from the SEC's Public Reference Branch, 450 Fifth Street, N.W., Washington, D.C. 20549 (telephone (202) 942–8090).

Applicants' Representations

1. The Trust is an Ohio business trust that is registered under the Act as an open-end management investment company. The Trust currently offers four portfolios, one of which is the International Fund (''Fund'').

2. The Adviser is registered under the Investment Advisers Act of 1940 (''Advisers Act'') and serves an investment adviser to the Fund pursuant to an investment advisory agreement. The Adviser is a wholly-owned subsidiary of KeyCorp.

3. The Subadviser, which is organized as a Scottish limited partnership, is registered under the Advisers Act. The Subadviser serves as a subadviser to the Fund pursuant to an investment subadvisory agreement with the Adviser. The Adviser pays the Subadviser out of the fee that the Adviser receives from the Fund.

4. On October 24, 1998, PIMCO Advisors LP (''PIMCO''), a general partner of the Subadviser, and certain of

PIMCO's affiliates entered into an agreement pursuant to which they will sell 75% general partner interest in the Subadviser to Alleghany Asset Management, Inc. (''AAM'') and certain of its affiliates (the ''Transaction''). Upon consummation of the Transaction, the Subadviser will become a subsidiary of AAM, which in turn is the investment management of Alleghany Corporation. Applicants expect consummation of the Transaction on or about March 1, 1999.

5. Applicants state that the Transaction may result in an assignment, and thus termination, of the existing subadvisory agreement between the Adviser and the Subadviser. Applicants request an exemption to permit the implementation, during the Interim Period and prior to obtaining shareholder approval, of the New Agreement. The requested exemption would cover an Interim Period commencing on the later of the date the Transaction is consummated or the date the requested order is issued [1] and continuing until the New Agreement is approved or disapproved by Fund shareholders (but in no event later than March 22, 1999).[2] The requested order also would permit the Subadviser to receive all fees earned under the New Agreement during the Interim Period, subject to approval of the New Agreement by Fund shareholders. Applicants state that the New Agreement will contain substantially the same terms and conditions as the subadvisory agreement most recently approved by the Fund's shareholders, except for changes to the commencement and termination dates.

6. On September 14 and November 6, 1998, the Trust's Board of Trustees (''Board'') met to evaluate whether the terms of the New Agreement are in the best interests of the Fund and its shareholders. The Board, including a majority of the trustees who are not ''interested persons'' of the Fund, as that term is defined in section 2(a)(19) of the Act (''Independent Trustees''), approved the New Agreement and voted to recommend that the Fund's shareholders approve the New Agreement. Proxy materials for the shareholders meeting were mailed on February 1, 1999.

7. Fees earned by the Subadviser under the New Agreement during the Interim Period will be maintained in an interest-bearing escrow account with an unaffiliated financial institution. The escrow agent will release the amounts held in the escrow account (Including any interest earned): (i) to the Subadviser upon approval of the New Agreement by the Fund's shareholders; or (ii) to the Fund, if the Interim Period has ended and the Fund's shareholders have not approved the New Agreement. Before any such release is made, the Board will be notified.

Applicants' Legal Analysis

1. Section 15(a) of the Act provides, in relevant part, that it is unlawful for any person to serve as an investment adviser to a registered investment company, except pursuant to a written contract that has been approved by the vote of a majority of the outstanding voting securities of the investment company. Section 15(a) further requires the written contract to provide for its automatic termination in the event of its assignment. Section 2(a)(4) of the Act defines ''assignment'' to include any direct or indirect transfer of a controlling block of the assignor's outstanding voting securities by a security holder of the assignor. Section 2(a)(9) of the Act defines ''control'' as the power to exercise a controlling influence over the management or policies of a company, and beneficial ownership of more than 25% of the voting securities of a company is presumed under Section 2(a)(9) to reflect control. Applicants state that the Transaction may result in an assignment of the existing subadvisory agreement and that such agreement will terminate according to its terms.

2. Rule 15a–4 under the Act provides, in relevant part, that if an investment advisory contract with a registered investment company is terminated by an assignment, an investment adviser may act as such for the company for 120 days under a written contract that has not been approved by the company's shareholders, provided that; (i) the new contract is approved by that company's board of directors,including a majority of the non-interested directors; (ii) the compensation to be paid under the new contract does not exceed the compensation that would have been paid under the contract most recently approved by the company's shareholders; and (iii) neither the adviser nor any controlling person of the adviser ''directly or indirectly receives money or other benefit'' in connection with the assignment. Applicants state that they may not be entitled to rely on rule 15a–4 because the Subadviser may be deemed to receive a benefit in connection with the Transaction.

3. Section 6(c) of the Act provides that the SEC may exempt any person, security, or transaction from any provision of the Act or any rule thereunder if and to the extent that such exemption is necessary or appropriate in the public interest and consistent with both the protection of investors and the purposes fairly intended by the policy and provisions of the Act. Applicants believe that the requested relief meets this standard.

4. Applicants state that the terms and timing of the Transaction were determined in response to a number of business factors beyond the scope of the Act and substantially unrelated to the Fund. Applicants assert that there is insufficient time to obtain shareholder approval of the New Agreement before the Transaction is consummated. Applicants further assert that the requested relief would prevent any disruption in the delivery of investment subadvisory services to the Fund during the period following consummation of the Transaction.

5. Applicants represent that, under the New Agreement during the Interim Period, the Fund will receive substantially identical investment subadvisory services, provided in substantially the same manner, as it received prior to the consummation of the Transaction. Applicants state that, in the event of any material change in personnel of the Subadviser providing services pursuant to the New Agreement during the Interim Period, the Subadviser will apprise and consult the Board to assure that the Board, including a majority of the independent Trustees,is satisfied that the services provided by the Subadviser will not be diminished in scope and quality.

6. Applicants note that the fees payable to the Subadviser under the New Agreement during the Interim Period will be at the same rate as the fees paid under the subadvisory agreement most recently approved by the Fund's shareholders.

[1] Applicants state that if the consummation of the Transaction precedes the issuance of the requested order, the Subadviser will serve after the consummation of the Transaction and prior to the issuance of the order in a manner consistent with its fiduciary duty to provide investment subadvisory services to the Fund even though approval of the New Agreement has not yet been secured from the Fund's shareholders. Applicants submit that, in such an event, the Subadviser will be entitled to receive from the Adviser, from the date of the consummation of the Transaction until the issuance of the order, no more than the actual out-of-pocket cost to the Subadviser for providing investment subadvisory services to the Fund.

[2] On October 23 1998, the Adviser's parent company was acquired by KeyCorp. In anticipation of that acquisition, Applicants obtained an order from the Commission to permit the implementation, without shareholder approval, of new investment advisory and subadvisory agreements with the Fund for a period of up to 150 days. *See* Gradison-McDonald Cash Reserve Trust, Investment Company Act Rel. Nos. 23442 (Sept. 22, 1998) (notice) and 23484 (Oct. 14, 1998) (order) (''Prior Order''). Under the Prior Order, the Fund must hold a shareholder meeting no later than March 22, 1999.

Applicants' Conditions

Applicants agree as conditions to the issuance of the exemptive order requested by the application that:

1. The New Agreement will have substantially the same terms and conditions as the subadvisory agreement most recently approved by the Fund's shareholders, except for the commencement and termination dates.

2. Fees earned by the Subadviser under the New Agreement during the Interim Period will be maintained in an interest-bearing escrow account with an unaffiliated financial institution. The escrow agent will release those fees (including any interest earned on those fees): (i) to the Subadviser upon approval of the New Agreement by the Fund's shareholders; or (ii) to the Fund, if the Interim Period has ended and the Fund's shareholders have not approved the New Agreement.

3. The Fund will promptly schedule a meeting of its shareholders to vote on approval of the New Agreement, which will be held within the Interim Period (but in no event later than March 22, 1999).

4. The Adviser and/or one or more of its affiliates or subsidiaries or the Subadviser, but not the Fund, will pay the cost of preparing and filing the application. The Adviser and/or one or more of its affiliates or subsidiaries, but not the Fund, will pay the costs relating to the solicitation of shareholder approval of the New Agreement.

5. The Subadviser will take all appropriate actions to ensure that the scope and quality of subadvisory and other services provided to the Fund during the Interim Period under the New Agreement will be at least equivalent, in the judgment of the Board, including a majority of the Independent Trustees, to the scope and quality of services provided under the subadvisory agreement most recently approved by the Fund's shareholders. In the event of any material change in personnel providing services pursuant to the New Agreement during the Interim Period, the Subadviser will apprise and consult the Board to assure that the Board, including a majority of the Independent Trustees, is satisfied that the services provided by the Subadviser will not be diminished in scope or quality.

For the SEC, by the Division of Investment Management, under delegated authority.

Margaret H. McFarland,

Deputy Secretary.

[FR Doc. 99–2932 Filed 2–5–99; 8:45 am]

BILLING CODE 8010–01–M

SECURITIES AND EXCHANGE COMMISSION

[Investment Company Act Release No. 23673; 812–11406]

Horace Mann Mutual Funds et al.; Notice of Application

February 1, 1999.

AGENCY: Securities and Exchange Commission (''Commission'').

ACTION: Notice of an application under section 6(c) of the Investment Company Act of 1940 (the ''Act'') for an exemption from section 15(a) of the Act and rule 18f–2 under the Act, as well as from certain disclosure requirements.

SUMMARY OF THE APPLICATION: Applicants, Horace Mann Mutual Funds (the ''Company'') and Wilshire Associates Incorporated (the ''Adviser''), request an order that would (a) permit applicants to enter into and materially amend sub-advisory agreements without shareholder approval and (b) grant relief from certain disclosure requirements.

FILING DATE: The application was filed on November 18, 1998. Applicants have agreed to file an amendment to the application during the notice period, the substance of which is reflected in this notice.

Hearing or Notification of Hearing: An order granting the application will be issued unless the Commission orders a hearing. Interested persons may request a hearing by writing to the Commission's Secretary and serving applicants with a copy of the request, personally or by mail. Hearing requests should be received by the Commission by 5:30 p.m. on February 24, 1999, and should be accompanied by proof of service on applicants in the form of an affidavit or, for lawyers, a certificate of service. Hearing requests should state the nature of the writer's interest, the reason for the request, and the issues contested. Persons who wish to be notified of a hearing may request notification by writing to the Commission's Secretary.

ADDRESSES: Secretary, Commission, 450 Fifth Street, N.W., Washington, D.C. 20549. Applicants, c/o Christine A. Scheel, Esq., Vedder, Price, Kaufman & Kammholz, 222 North LaSalle Street, Chicago, Illinois 60601–1003.

FOR FURTHER INFORMATION CONTACT: Emerson S. Davis, Sr., Senior Counsel, at (202) 942–0714, or George J. Zornada, Branch Chief, at (202) 942–0564 (Division of Investment Management, Office of Investment Company Regulation).

SUPPLEMENTARY INFORMATION: The following is a summary of the application. The complete application may be obtained for a fee from the Commission's Public Reference Branch, 450 Fifth Street, N.W., Washington, D.C. 20549 (telephone (202) 942–8090).

Applicant's Representations

1. The Company, a Delaware business trust, is registered under the Act as an open-end management investment company. The Company is currently comprised of seven series (each a ''Fund'' and collectively, the ''Funds''), each of which has its own investment objective, policies and restrictions.[1] The shares of the Funds serve as funding vehicles for variable annuity contracts offered through separate accounts of the Horace Mann Life Insurance Company (''Horace Mann Life''). Horace Mann Life is a wholly-owned indirect subsidiary of Horace Mann Educators Corporation. The Adviser, a California corporation, will serve as investment adviser to the Funds beginning on March 1, 1999.[2] The Adviser is registered under the Investment Advisers Act of 1940 (''Advisers Act'').

2. The Adviser will serve as investment adviser to the Company pursuant to an investment advisory agreement between the Company and the Adviser that was approved by the Board of Trustees of the Company (''Board''), including a majority of the Trustees who are not ''interested persons,'' as defined in section 2(a)(19) of the 1940 Act (''Independent Trustees''), and the shareholders of the Funds (''Investment Advisory Agreement''). Under the Investment Advisory Agreement, the Adviser has overall general supervisory responsibility for the investment program of the Funds and, subject to the general supervision of the Board, has authority to select and contract with one or more subadvisers (each a ''Portfolio Manager'' and collectively, ''Portfolio Managers'') to provide one or more Funds with portfolio management services. Each Portfolio Manager will be an investment adviser registered under the Advisers Act and will perform services pursuant to a written agreement with the Adviser (the ''Sub-Advisory

[1] Applicants also request relief with respect to future series of the Company and all future registered open-end management investment companies that are (a) advised by the Adviser or any entity controlling, controlled by, or under common control with the Adviser, and (b) operate in substantially the same manner as the Funds and comply with the terms and conditions contained in the application (''Future Funds''). The Company is the only existing investment company that currently intends to rely on the order.

[2] The Funds currently are advised by Horace Mann Investors, Inc., an investment adviser registered under the Investment Advisers Act of 1940.

Agreement''). Portfolio managers' fees will be paid by the Adviser out of its fees from the Funds at rates negotiated with the Portfolio Managers by the Adviser.

3. Applicants represent that the Adviser has over 25 years of experience in the selection and supervision of investment managers for investment programs. These programs include insurance company assets, mutual funds, non-registered institutional funds, and pension funds. The Adviser primarily advises its clients regarding customized asset allocation/multi-manager structures and facilitates the implementation of such structures and the selection of various investment management organizations. Through the use of its state-of-the-art proprietary performance analytics system, the Adviser monitors managers and investment performance. The Adviser will employ its expertise to evaluate and select Portfolio Managers that have shown the ability to effectuate the Adviser's investment policies and add the most value to shareholders of the Funds. The Adviser will select those Portfolio Managers that have distinguished themselves through successful performance in the market sectors in which the respective Funds invest. The Adviser will review, monitor and report to the Board regarding the performance and procedures of the Portfolio Managers and, subject to Board oversight, take responsibility for selecting and terminating Portfolio Managers.

4. Applicants request relief to permit the Adviser to enter into and amend Sub-Advisory Agreements without shareholder approval. The requested relief will not extend to a Portfolio Manager that is an affiliated person, as defined in section 2(a)(3) of the Act, of the Company or the Adviser, other than by reason of serving as a Portfolio Manager to one or more of the Funds (an ''Affiliated Portfolio Manager'').

5. Applicants also request an exemption from the various disclosure provisions described below that may require each Fund to disclose fees paid by the Adviser to the Portfolio Managers. The Company will disclose for each Fund (both as a dollar amount and as a percentage of a Fund's net assets): (i) the aggregate fees paid to the Adviser and Affiliated Portfolio Managers; and (ii) aggregate fees paid to Portfolio Managers other than Affiliated Portfolio Managers (''Aggregate Fee Disclosure''). For any Fund that employs an Affiliated Portfolio Manager, the Fund will provide separate disclosure of any fees paid to the Affiliated Portfolio Manager.

Applicants' Legal Analysis

1. Section 15(a) of the Act provides, in relevant part, that it is unlawful for any person to act as an investment adviser to a registered investment company except pursuant to a written contract that has been approved by the vote of the company's outstanding voting securities. Rule 18f–2 under the Act provides that each series or class of stock in a series company affected by a matter must approve such matter if the Act requires shareholder approval.

2. Forum N–1A is the registration statement used by open-end investment companies. Items 3, 6(a)(1)(ii), and 15(a)(3) of Form N–1A require disclosure of the method and amount of the investment adviser's compensation.

3. Form N–14 is the registration form for business combinations involving open-end investment companies. Item 3 of Form N–14 requires the inclusion of a ''table showing the current fees for the registrant and the company being acquired and pro forma fees, if different, for the registrant after giving effect to the transaction.''

4. Rule 20a–1 under the Act requires proxies solicited with respect to an investment company to comply with Schedule 14A under the Securities Exchange Act of 1934 (the ''Exchange Act''). Item 22(a)(3)(iv) of Schedule 14A requires a proxy statement for a shareholder meeting at which a new fee will be established or an existing fee increased to include a table of the current and pro forma fees. Items 22(c)(1)(ii), 22(c)(1)(iii), 22(c)(8), and 22c(c)(9), taken together, require a proxy statement for a shareholder meeting at which the advisory contract will be voted upon to include the ''rate of compensation of the investment adviser,'' the ''aggregate amount of the investment adviser's fee,'' a description of the ''terms of the contract to be acted upon,'' and, if a change in the advisory fee is proposed, the existing and proposed fees and the difference between the two fees.

5. Form N–SAR is the semi-annual report filed with the Commission by registered investment companies. Item 48 of Form N–SAR requires investment companies to disclose the rate schedule for fees paid to their investment advisers, including the Portfolio Managers.

6. Regulation S–X sets forth the requirements for financial statements required to be included as part of investment company registration statements and shareholder reports filed with the Commission. Sections 6–07(2)(a), (b) and (c) of Regulation S–X require that investment companies include in their financial statements information about investment advisory fees.

7. Section 6(c) of the Act provides that the Commission may exempt any person, security, or transaction or any class or classes of persons, securities, or transactions from any provision of the Act, or from any rule thereunder, if such exemption is necessary or appropriate in the public interest and consistent with the protection of investors and the purposes fairly intended by the policies and provisions of the Act. Applicants believe that their requested relief meets this standard for the reasons discussed below.

8. Applicants assert that the Funds' investors will rely on the Adviser to select one or more Portfolio Managers best suited to achieve a Fund's investment objectives. Therefore, applicants assert that, from the perspective of the investor, the role of the Portfolio Managers is comparable to that of individual portfolio managers employed by other investment advisory firms. Applicants note that the Investment Advisory Agreement will remain subject to section 15(a) of the Act and rule 18f–2 under the Act.

9. Applicants further assert that some Portfolio Managers use a ''posted'' rate schedule to set their fees. Applicants believe that some organizations may be unwilling to serve as Portfolio Managers at any fee other than their ''posted'' fee rates, unless the rates negotiated for the Funds are not publicly disclosed. Applicants believe that requiring disclosure of Portfolio Manager's fees may deprive the Adviser of its bargaining power while producing no benefit to shareholders, since the total advisory fee they pay would not be affected.

Applicants' Conditions

Applicants agree that any order granting the requested relief will be subject to the following conditions:

1. Before an existing Fund may rely on the order requested in the application, the operation of the Fund in the manner described in the application will be approved by a majority of the outstanding voting securities (or, if the Fund serves as a funding medium for any sub-account of a registered separate account, pursuant to voting instructions provided by the unitholders of the sub-account), as defined in the Act, or, in the case of a Future Fund whose public shareholders purchased shares on the basis of a prospectus containing the disclosure contemplated by condition 2 below, by the sole initial shareholder(s) before offering shares of that Future Fund to

the public (or the variable contract owners through a separate account).

2. The Company will disclose in its prospectus the existence, substance and effect of any order granted pursuant to the application. In addition, each Fund relying on the requested order will hold itself out to the public as employing the management structure described in the application. The prospectus will prominently disclose that the Adviser has ultimate responsibility (subject to oversight by the Board) to oversee the Portfolio Managers and recommend their hiring, termination, and replacement.

3. Within 90 days of the hiring of any new Portfolio Manager, shareholders (or, if the Fund serves as a funding medium for any sub-account of a registered separate account, the unitholders of the sub-account) will be furnished all information about the new Portfolio Manager of Sub-Advisory Agreement that would be included in a proxy statement, except as modified to permit Aggregate Fee Disclosure. This information will include Aggregate Fee Disclosure and any change in such disclosure caused by the addition of a new Portfolio Manager. The Adviser will meet this condition by providing these sharehodlers with an information statement meeting the requirements of Regulation 14C, Schedule 14C, and Item 22 of Schedule 14A under the Exchange Act, except as modified to permit Aggregate Fee Disclosure.

4. The Adviser will not enter into a Sub-Advisory Agreement with an Affiliated Portfolio Manager without that Sub-Advisory Agreement, including the compensation to be paid thereunder, being approved by the Fund's shareholders (or if the Fund serves as a funding medium for any sub-account of a registered separate account, pursuant to voting instructions provided by the unitholder of the sub-account.

5. At all times, a majority of the Board will be Independent Trustees, and the nomination of new or additional Independent Trustees will be at the discretion of the then-existing Independent Trustees.

6. When a Portfolio Manager change is proposed for a Fund with an Affiliated Portfolio Manager, the Board, including a majority of the Independent Trustees, will make a separate finding, reflected in the Board minutes, that the change is in the best interests of the Fund and its shareholders, (or, if the Fund serves as a funding medium for any sub-account of a registered separate account, in the best interests of the Fund and the unitholders of any sub-account) and does not involve a conflict of interest from which the Adviser or the Affiliated Portfolio Manager derives an inappropriate advantage.

7. The Adviser will provide the Board, no less frequently than quarterly, will information about the Adviser's profitability on a per Fund basis. This information will reflect the impact on profitability of the hiring or termination of any Portfolio Manager during the applicable quarter.

8. Whenever a Portfolio Manager is hired or terminated, the Adviser will provide the Board with information showing the expected impact on the Adviser's profitability.

9. The Adviser will provide general management services to the Company and the Funds, including overall supervisory responsibility for the general management and investment of each Fund, and, subject to review and approval by the Board will (i) set each Fund's overall investment strategies; (ii) evaluate, select and recommend Portfolio Managers to manage all or a part of a Fund's assets; (iii) when appropriate, allocate and reallocate a Fund's assets among multiple Portfolio Managers; (iv) monitor and evaluate the investment performance of Portfolio Managers; and (v) implement procedures reasonably designed to ensure that the Portfolio Managers comply with the relevant Fund's investment objective, policies, and restrictions.

10. No director, trustee or officer of the Company or the Adviser will own directly or indirectly (other than through a pooled investment vehicle that is not controlled by such person) any interest in any Portfolio Manager except for (i) ownership of interests in the Adviser or any entity that controls, is controlled by, or is under common control with the Adviser; or (ii) ownership of less than 1% of the outstanding securities of any class of equity or debt of a publicly-traded company that is either a Portfolio Manager or an entity that controls, is controlled by, or is under common control with a Portfolio Manager.

11. The Company will disclose in its registration statement the Aggregate Fee Disclosure.

12. Independent counsel knowledgeable about the Act and the duties of Independent Trustees will be engaged to represent the Independent Trustees of the Company. The selection of such counsel will remain within the discretion of the Independent Trustees.

For the Commission, by the Division of Investment Management, under delegated authority.

Margaret H. McFarland,

Deputy Secretary.

[FR Doc. 99–2893 Filed 2–5–99; 8:45 am]

BILLING CODE 8010–01–M

SECURITIES AND EXCHANGE COMMISSION

[Release No. 35–26970]

Filings Under the Public Utility Holding Company Act of 1935, as Amended (''Act'')

January 29, 1999.

Notice is hereby given that the following filing(s) has/have been made with the Commission pursuant to provisions of the Act and rules promulgated under the Act. All interested persons are referred to the applications(s) and/or declaration(s) for complete statements of the proposed transaction(s) summarized below. The application(s) and/or declaration(s) and any amendments is/are available for public inspection through the Commission's Office of Public Reference.

Interested persons wishing to comment or request a hearing on the application(s) and/or declaration(s) should submit their views in writing by February 22, 1999, to the Secretary, Securities and Exchange Commission, Washington, DC 20549, and serve a copy on the relevant applicant(s) and/or declarants(s) at the address(es) specified below. Proof of service (by affidavit or, in case of an attorney at law, by certificate) should be filed with the request. Any request for hearing should identify specifically the issues of fact or law that are disputed. A person who so requests will be notified of any hearing, if ordered, and will received a copy of any notice or order issued in the matter. After February 22, 1999, the application(s) and/or declaration(s), as filed or as amended, may be granted and/or permitted to become effective.

Ameren Corporation

[70–9423]

Ameren Corporation (''Ameren''), a registered holding company, Union Electric Company (''UE''), an electric and gas public utility subsidiary of Ameren, and Ameren Services Company (''Ameren Services''), a service company subsidiary of Ameren, all located at 1901 Chouteau Avenue, St. Louis, Missouri 63103, and Central Illinois Public Service Company (''CIPS''), and electric and gas public utility subsidiary of Ameren, located at 607 East Adams,

Springfield, Illinois 62953, have filed an application-declaration under sections 6(a), 7, 9(a), 10, and 12(b) of the Act and rules 43 and 54 under the Act.

Applicants propose to establish and participate in a money pool (the ''Money Pool'') through February 27, 2003. The specific terms and provisions of the Money Pool will be forth in a money pool agreement (''Agreement'') among all of the applicants. The applicants are proposing to establish the Money Pool in order to coordinate and provide for the short-term cash and working capital requirements of UE, CIPS and Ameren Services.

UE's aggregate principal amount of borrowings outstanding at any one time from the Money Pool will be limited to $500 million. Borrowings by CIPS and Ameren Services under the Money Pool will be exempt under rule 52. Ameren will not borrow funds from the Money Pool. In accordance with the Agreement, funds for the Money Pool will be available from surplus funds in the treasuries of UE, CIPS, Ameren Services and Ameren (''Internal Funds''), and proceeds from bank borrowings and the sale of commercial paper by Ameren, UE, and CIPS (''External Funds'').[1]

No party will be required to borrow through the Money Pool if it is determined that it could borrow at a lower cost directly from banks or through the sale of its own commercial paper in an existing commercial paper program. Each participate will, in its sole discretion, make the determination of whether it will lend funds to the Money Pool.

The loans will be made through open-account advances and will be repayable no later than one year after the date of the advance. In addition, the loans may be repaid in whole at any time or in part from time to time, without premium or penalty. Ameren Services will administer the Money Pool on an ''at cost'' basis.

Funds provided to the Money Pool that are not used to make loans will ordinarily be invested in one or more short-term investments or any other investments that are permitted by section 9(c) of the Act and rule 40 under the Act.

[1] By order dated March 13, 1998 (HCAR No. 26841), Ameren is authorized, through February 27, 2003, to obtain debt financing from third parties up to a maximum of $300 million. Under the terms of that order, UE and CIPS are authorized, through February 27, 2003, to obtain debt financing up to a maximum of $1 billion for UE and $250 million for CIPS.

Rochester Gas and Electric HoldCo

[70–9355]

Rochester Gas and Electric HoldCo (''HoldCo''), 89 East Avenue, Rochester, New York 14649, a wholly owned subsidiary of Rochester Gas and Electric Corporation (''RG&E''), a gas and electric public utility company, has filed an application under section 3(a)(1) of the Act for an order exempting it from regulation under all of the provisions of the Act, except section 9(a)(2).

RG&E is a combination gas and electric public utility company operating in the state of New York. It owns and operates electric generation, transmission and distribution facilities and natural gas distribution facilities serving approximately one million retail customers in and around Rochester, New York.

HoldCo proposes to acquire all of the outstanding common stock of RG&E. The acquisition will be accomplished through an exchange (''Exchange'') of each outstanding share of RG&E common stock for one share of HoldCo common stock. As a result of the Exchange, RG&E will become a subsidiary of HoldCo. The Exchange requires the affirmative vote of two-thirds of the votes of the outstanding shares of RG&E common stock at RG&E annual stockholder meeting, expected to be held on April 29, 1999.

In addition, Holdco would become the direct parent of RG&E's nonutility subsidiaries, through a capital contribution by RG&E to Holdco of RG&E's interests in those subsidiaries prior to Holdco's acquisition of RG&E. These subsidiaries include Energetix, Inc., which sells electric capacity and energy at market rates, and RGS Development Corporation, which pursues unregulated energy business opportunities.[2]

For the period ending on June 30, 1998, RG&E had annual operating revenues of $493.2 million. RG&E is subject to the regulatory authority of the New York Public Service Commission.

HoldCo states that the proposed restructuring plan is intended to permit the financial and regulatory flexibility necessary to compete more effectively in an increasingly competitive energy industry by providing a structure that can accommodate both regulated and unregulated businesses.

HoldCo asserts that following the Exchange, it will be a public utility holding company entitled to an exemption under section 3(a)(1) of the Act, because it and RG&E will be predominantly intrastate in character and will carry on their business substantially in the state of New York.

[2] Another nonutility subsidiary, Energyline Corporation, is currently inactive and is expected to be dissolved prior to the proposed restructuring.

Potomac Edison Company

[70–9373]

Potomac Edison Company (''Potomac Edison''), a public utility subsidiary of Allegheny Energy Inc. (''Allegheny''), a registered holding company, located at 10435 Downsville Pike, Hagerstown, Maryland, has filed an application under section 9(c)(3) of the Act.

Potomac Edison proposes, through December 31, 2001, to invest up to $250,000 to engage in preliminary development activities in connection with a joint venture project to develop a business and technology park. Preliminary development activities may include negotiations with real estate developers, preliminary engineering and licensing activities, contract drafting, consultations with tax, legal and other professionals, and other necessary activities.

Potomac Edison represents that the activities of the joint venture would be limited to the development, lease and or sale of a parcel of land located adjacent to Potomac Edison's and Allegheny's headquarters in Hagerstown, Maryland (''Property''). It is anticipated that once the joint venture is formed, the real estate developer would manage its day-to-day operations, Potomac Edison would transfer the Property to the joint venture, and the developer would provide capital for and oversee the development and market the Property as a business and technology park.[3]

Potomac Edison states that it will not enter into the joint venture arrangement without prior Commission approval.

New Century Energies, Inc., et al.

[70–9397]

New Century Energies, Inc. (''NCE''), a registered holding company; NCE's utility subsidiaries, Public Service Company of Colorado (''PSCo'') and Cheyenne Light, Fuel and Power Company (''Cheyenne''); NCE's nonutility subsidiaries, New Century Services, Inc. (''NCS''), West Gas Interstate, Inc., NC Enterprises, Inc. (''Enterprises''), New Century International, Inc., e prime, inc. (''e prime''), PS Colorado Credit Corporation (''PSCCC''), Natural Fuels Corporation, P.S.R. Investments, Inc., Green and Clear Lakes Company, 1480 Welton, Inc., The Planergy Group, Inc.,

[3] Development activities are intended to include installation of the infrastructure (water, sewer and other utilities), roads and other amenities, and subdivision of the Property as necessary to create buildable and saleable lots.

and New Century-Cadence, Inc., each located at 1225 17th Street, Denver, Colorado 80202–5533; NCE's utility subsidiary, Southwestern Public Service Company (together with PSCo and Cheyenne, ''Utility Subsidiaries''); and NCE's nonutility subsidiaries, Quixx Corporation (''Quixx'') and Utility Engineering Corporation (''UEC''), each located at Tyler at Sixth, Amarillo, Texas 79101 (collectively, ''Applicants''), have filed an application-declaration under sections 6(a), 7, 9(a), 10, 12(b), 12(c), and 13(b) of the Act and rules 43, 45, 46, 54 and 87 under the Act.[4]

As described more fully below, Applicants seek authority through December 31, 2001 (the ''Authorization Period''), except as otherwise noted, for: (i) external financings by NCE and Cheyenne; (ii) intrasystem financing, including guarantees, between NCE and certain of the Subsidiaries, and among certain of the Subsidiaries; (iii) NCE and, to the extent not exempt under rule 52, the Subsidiaries to enter into hedging transactions for existing and anticipated debt in order to manage interest rate costs; (iv) the issuance by the Subsidiaries of types of securities not exempt under rules 45 and 52; (v) NCE and the Subsidiaries to establish, guarantee the obligations of, and borrow the proceeds of the debt and equity issued by, one or more financing entities (''Financing Subsidiaries''); (vi) NCE, Enterprises and any direct or indirect subsidiary of Enterprises to acquire the equity securities of one or more intermediate subsidiaries organized for the purpose of acquiring, financing, and holding the securities of one or more Nonutility Subsidiaries; (vii) Enterprises and any direct or indirect subsidiary of Enterprises to pay dividends out of capital and unearned surplus; and (viii) the Nonutility Subsidiaries to sell goods and services to certain nonutility associates at fair market prices, under an exemption from section 13(b) of the Act.

The proceeds from the financings will be used for general corporate purposes, including: (i) capital expenditures of NCE and the Subsidiaries, (ii) repayment, redemption, refunding or purchase of securities of NCE or the Subsidiaries in transactions exempt under rule 42, (iii) working capital requirements of NCE and the Subsidiaries, and (iv) other lawful general purposes.[5] Applicants represent that no financing proceeds will be used to acquire the equity securities of any new subsidiary, unless that acquisition has been approved by the Commission or is under an available exemption under the Act or rules under the Act. In addition, Applicants represent that any use of proceeds to make investments in any of the Subsidiaries formed under rule 58 will be subject to the investment limitation of the rule, and any use of proceeds to make investments in any exempt wholesale generator (''EWG'') or foreign utility company (''FUCO'') will be subject to the investment limitation of rule 53, as it may be modified by order of the Commission in file no. 70–9341.[6]

By orders dated August 1, 1997 and May 14, 1998 (HCAR Nos. 26750 and 26872, respectively), NCE and certain Subsidiaries were authorized to engage in, among other things, various external and intrasystem financing transactions through December 31, 1999. These companies will relinquish the authority granted in those orders on the effective date of an order by the Commission in this proceeding approving the proposed transactions.

1. NCE External Financings

a. Common Stock

NCE requests authority to issue and sell from time to time up to $1.25 billion of its common stock, $1 par value per share. In addition, NCE requests authority to issue an additional 30 million shares of common stock (subject to adjustment to reflect any stock split) from time to time through December 31, 2008 under its benefit and dividend reinvestment plans. NCE also proposes to issue options exercisable for Common Stock and issue Common Stock upon the exercise of those options.

b. Debt

NCE requests authority to issue and sell from time to time debt securities to nonassociates in an aggregate principal amount of up to $600 million outstanding at any one time (''NCE Debt Limitation''). These debt securities will consist of short-term debt having a maturity from the date of issue of not more than one year and unsecured debentures (''Debentures'') having a maturity of up to 40 years. The aggregate principal amount of Debentures at any time outstanding will not exceed $300 million. In addition, NCE proposes that the NCE Debt Limitation be increased to $975 million, of which $450 million will consist of Debentures, if and when PSCCC[7] becomes a direct subsidiary of NCE.

Short-term debt may consist of bank borrowings which would mature in no more than one year from the date of the borrowing, or commercial paper issued to dealers. In addition, NCE may engage in other types of short-term financing generally available to borrowers with comparable credit ratings as it may deem appropriate in light of its needs and market conditions at the time of issuance.

Interest rates on the Debentures of one or more series may be fixed, floating or ''multi-modal'', i.e., interest rates that are periodically reset, alternating between fixed and floating interest rates for each reset period. NCE represents that it will not issue any Debentures that are not rated at least investment grade at the time of original issuance by a nationally recognized statistical rating organization, without further Commission authorization.

c. Other Securities

NCE also request authority to issue and sell other securities not specifically identified above. NCE requests that the Commission reserve jurisdiction over the issuance of securities other than common stock, short-term debt and Debentures, and represents that it will file a post-effective amendment in this proceeding to supplement the record for any other securities.

2. Utility Subsidiary External Financing

a. Cheyenne Short-Term Debt

Cheyenne requests authority to issue and sell from time to time up to $40 million of short-term debt to nonassociates. The short-term financing could include, without limitation, commercial paper sold in established domestic or European commercial paper markets, bank lines and debt securities issued under Cheyenne's indentures and note programs. Maturities of short-term borrowings will not be greater than one year from the date of each loan.

[4] Except as otherwise noted, the term ''Nonutility Subsidiaries'' means each of the direct and indirect nonutility subsidiaries of NCE, including those identified above, and their respective subsidiaries, and the term ''Subsidiaries'' means the Utility Subsidiaries and the Nonutility Subsidiaries. In addition, the term ''Nonutility Subsidiaries'' refers to any future direct or indirect nonutility subsidiaries of NCE whose equity securities may be acquired in accordance with the Commission's authorization or in accordance with an exemption provided under the Act or rules under the Act.

[5] This includes the refinancing of interests held by Enterprises in Yorkshire Power Group Limited (''Yorkshire''), which indirectly owns a foreign utility company in the United Kingdom, Yorkshire Electricity Group plc. NCE plans to make advances or cash capital contributions to Enterprises to enable Enterprises to prepay in whole or in part a note issued to PSC to finance Enterprises' acquisition from PSCo of a 50% interest in Yorkshire.

[6] In that filing, NCE is requesting authority to invest in EWGs and FUCOs the proceeds of securities it issues in amounts aggregating up to 100% of its consolidated retained earnings.

[7] PSCCC, currently a subsidiary of PSCo, is engaged in financing and factoring fuel inventories and accounts receivable.

b. Other Securities

The Utility Subsidiaries also proposed to issue and sell other types of securities to nonassociates which do not qualify for exemption under rule 52 but which are considered appropriate during the Authorization Period. Accordingly, the Utility Subsidiaries request that the Commission reserve jurisdiction over the issuance of these additional types of securities. The Utility Subsidiaries state they will file a post-effective amendment in this proceeding which will describe the general terms and amounts of each security and request a supplemental order of the Commission authorizing the issuance of that security.

3. Nonutility Subsidiary External Financings

Applicants believe that, in almost all cases, borrowings by the Nonutility Subsidiaries will be exempt from prior Commission authorization under rule 52(b). However, the Nonutility Subsidiaries request that the Commission reserve jurisdiction over the issuance of any other securities to nonassociates where the exemption under rule 52(b) would not apply. The Nonutility Subsidiaries state they will file a post-effective amendment in this proceeding which will describe the general terms and amounts of each security and requet a supplemental order authorizing the issuance of that security.

4. Intrasystem Financing

a. General

NCE requests authority to provide financing to the Subsidiaries and the Subsidiaries propose to provide financing to other Subsidiaries in aggregate principal amount of up to $500 million outstanding at any one time, exclusive of financing that is exempt under rule 45(b) or rule 52. These financings will generally be in the form of cash capital contributions, open account advances, inter-company loans, and/or capital stock purchases. Intrasystem financing will provide funds for general corporate purposes and other working capital requirements, investments and capital expenditures. NCE or the lending Subsidiary will determine, at its discretion, how much financing to give each borrowing Subsidiary as its needs dictate during the Authorization Period.

b. Guarantees

NCE requests auhtority to enter into guarantees and provide other forms of credit support (''NCE Guarantees'') for obligations of any Subsidiary in an aggregate principal amount not to exceed $800 million at any one time outstanding, exclusive of any guarantees or other forms of credit support that are exempt under rule 45(b); provided, however, that if and when PSCCC becomes a direct subsidiary of NCE, NCE may provide guarantees and other forms of credit support in an aggregate amount not to exceed $850 million (''NCE Guarantee Limitation'').

In addition, the Subsidiaries request authority to issue guarantees and other forms of credit support (''Subsidiary Guarantees,'' and together with NCE Guarantees, ''Guarantees'') for obligations of other Subsidiaries in an aggregate principal amount not to exceed $100 million at any one time outstanding, exclusive of guarantees that are exempt under rule 45(b) and rule 52 (''Subsidiary Guarantee Limitation''). Applicants propose that the amount of NCE Guarantees and Subisidiary Guarantees outstanding at any one time not be counted against the aggregate limits proposed in this filing for external financings or intrasystem financing.

5. Hedge Transactions

NCE and, to the extent not exempt under rule 52, the Subsidiaries request authority to enter into hedging transactions (Interest Rate Hedges'') with respect to existing indebtedness of these companies in order to manage and minimize interest rate costs. Interest Rate Hedges would only be entered into with counterparties which either have senior debt ratings, or are owned by companies that have senior debt ratings, equal to or greater than BBB, as published by Standard and Poor's Rating Group, or an equivalent rating from Moody's Investors Service, Fitch Investor Service or Duff & Phelps. Interest Rate Hedges will involve the use of financial instruments commonly used in today's capital markets, such as interest rate swaps, caps, collars floors, and structured notes (i.e., debt instrument in which the principal and/or interest payments are indirectly linked to the value of an underlying asset or index), or transactions involving the purchase or sale, including short sales, of U.S. Treasury securities.

NCE and the Subsidiaries also request authority to enter into Interest Rate Hedges with respect to anticipated debt issuances in order to lock-in current interest rates and/or manage interest rate risk exposure. These transactions would use: (i) a forward sale of U.S. Treasury futures contracts, U.S. Treasury securities and/or a forward swap (each a ''Forward Sale''), (ii) the purchase of put options on U.S. Treasury securities (a ''Put Options Purchase''), (iii) a Put Options Purchase in combination with the sale of call options on U.S. Treasury securities (a ''Zero Cost Collar''), (iv) transactions involving the purchase or sale, including short sales, of U.S. Treasury securities, or (v) some combination of a Forward Sale, Put Options Purchase, Zero Cost Collar and/or other derivative or cash transactions, including structured notes, caps and collars.

6. Financing Subsidiaries

NCE and the Subsidiaries request authority to acquire, directly or indirectly, the equity securities of one or more corporations, trusts, partnerships or other entities created specifically for the purpose of facilitating the financing of the activities of NCE and the Subsidiaries. The Financing Subsidiaries would issue long term debt or equity to third parties and transfer the proceeds of these financings to NCE or associate companies in the NCE holding company system. If the direct parent of a Financing Subsidiary is authorized in this or nay subsequent proceeding to issue long term debt or equity securities of a type similar to that issued by the Financing Subsidiary, then the amount of those securities issued by that Financing Subsidiary would count against the limitation applicable to its parent for those securities. In these cases, however, Guarantees entered into by the parent with respect to those securities would not count against the NCE Guarantee Limitation or the Subsidiary Guarantee Limitation, as the case may be. If the parent is not authorized in this or in a subsequent proceeding to issue long term debt or an equity security similar in type to the security issued by its Financing Subsidiary, then any Guarantee not exempt under rule 45 or 52 that is entered into by the parent for those securities would count against the NCE Guarantee Limitation or Subsidiary Guarantee Limitation, as the case may be.

7. Intermediate Subsidiaries

NCE, Enterprises [8] and Enterprises' subsidiaries request authority to acquire the equity securities of one or more intermediate subsidiaries (''Intermediate Subsidiaries'') organized for the purpose of acquiring, financing, and holding the securities of one or more Nonutility Subsidiaries. The Intermediate Subsidiaries may also provide management, administrative, project

[8] Enterprises serves as an intermediate holding company for certain of NCE's nonutility subsidiaries and investments.

development, and operating services to these Nonutility Subsidiaries.

8. Payment Of Dividends Out of Capital and Unearned Surplus

Enterprises and any direct or indirect subsidiary of Enterprises request authority to pay dividends out of capital and unearned surplus to the extent allowed under applicable law and under the terms of any credit or security instruments to which they may be parties.

9. Exemption From Section 13(b)

Certain Nonutility Subsidiaries [9] are currently authorized, by order dated August 1, 1997 (HCAR No. 26748), to provide services and goods at fair market prices to associate companies that are EWGs, FUCOs or qualifying facilities (''OFs''), subject to certain restrictions. NCE and the Nonutility Subsidiaries now wish to expand the scope of this exemption in two respects. First, those Subsidiaries which may sell services or goods under an exemption from the cost standard of section 13(b) to associate nonutility companies would be expanded to also include all Nonutility Subsidiaries. Second, NCE wishes to expand the categories of Nonutility Subsidiaries to which services and goods may be sold to also include exempt telecommunications companies (''ETCs''), subsidiaries formed under rule 58 (''Rule 58 Subsidiaries''), and other Nonutility Subsidiaries that do not derive any part of their income from sales of goods or services to any of the Utility Subsidiaries.

Accordingly, NCS and the Nonutility Subsidiaries request an exemption under section 13(b) of the Act to provide goods and services to any associate company (a ''Client Company'') at fair market prices, if:

(i) The Client Company is a FUCO or foreign EWG which derives no part of its income, directly or indirectly, from the generation, transmission, or distribution of electric energy for sale within the United States;

(ii) The Client Company is an EWG which sells electricity at market-based rates which have been approved by the Federal Energy Regulatory Commission (''FERC''), provided that the purchaser is not a Utility Subsidiary;

(iii) The Client Company is a QF within the meaning of the Public Utility Regulatory Policy Act of 1978 (''PURPA'') that sells electricity exclusively (a) at rates negotiated at arms' length to one or more industrial or commercial customers purchasing that electricity for their own use and not for resale, and/or (b) to an electric utility company other than a Utility Subsidiary at the purchaser's ''avoided cost'' as determined in accordance with the regulations under PURPA;

(iv) The Client Company is a domestic EWG or QF that sells electricity at rates based upon its cost of service, as approved by FERC or any state public utility commission having jurisdiction, provided that the purchaser is not a Utility Subsidiary; or

(v) The Client Company is an ETC, a Rule 58 Subsidiary, or a Nonutility Subsidiary that does not derive any part of its income from sales of goods, services or other property to a Utility Subsidiary.

For the Commission by the Division of Investment Management, under delegated authority.

Margaret H. McFarland,

Deputy Secretary.

[FR Doc. 99–2894 Filed 2–5–99; 8:45 am]

BILLING CODE 8010–01–M

[9] These include NCS, UEC, Quixx, Quixx Power Services, Inc., Universal Utility Services Company, Precision Resource Company, e prime, e prime Operating, Inc. and ep3, L.P.

SECURITIES AND EXCHANGE COMMISSION

[Release No. 35–26972]

Filings Under the Public Utility Holding Company Act of 1935, as Amended (''Act'')

February 1, 1999.

Notice is hereby given that the following filings(s) has/have been made with the Commission pursuant to provisions of the Act and rules promulgated under the Act. All interested persons are referred to the applications(s) and/or declaration(s) for complete statements of the proposed transactions(s) summarized below. The application(s) and/or declaration(s) and any amendments is/are available for public inspection through the Commission's Office of Public Reference.

Interested persons wishing to comment or request a hearing on the application(s) and/or declaration(s) should submit their views in writing by March 5, 1999, to the Secretary, Securities and Exchange Commission, Washington, D.C. 20549, and serve a copy on the relevant applicant(s) and/or declarants(s) at the address(es) specified below. Proof of service (by affidavit or, in case of an attorney at law, by certificate) should be filed with the request. Any request for hearing should identify specifically the issues of fact or law that are disputed. A person who so requests will be notified of any hearing, if ordered, and will receive a copy of any notice or order issued in the matter. After March 5, 1999, the application(s) and/or declaration(s), as filed or as amended, may be granted and/or permitted to become effective.

Ameren Corporation, et al.

[70–9133]

Ameren Corporation (''Ameren''), a registered holding company, Union Electric Company (''UE''), an electric and gas utility subsidiary company of Ameren, Union Electric Development Company, a wholly owned nonutility subsidiary company of UE, and Ameren Services Company (''AMS''), Ameren's service company, all located at 1901 Chouteau Avenue, St. Louis, Missouri 63103, Central Illinois Public Service Company, an electric and gas utility subsidiary company of Ameren and CIPSCO Investment Company, a nonutility subsidiary company of Ameren, both located at 607 East Adams, Springfield, Illinois 62739, and Electric Energy Incorporated, an indirect electric utility generating subsidiary of Ameren, located at 2100 Portland Road, Joppa, Illinois 62953 have filed a post-effective amendment under sections 6(a), 7, 12(b), 32 and 33 of the Act and rules 42, 45, 53 and 54 thereunder.

By order dated March 13, 1998 (HCAR No. 26841) (''Financing Order''), among other things, Ameren was authorized, through February 27, 2003 (''Authorization Period'') to: (1) issue and sell up to 15 million shares of common stock (''Common Stock''); (2) issue commercial paper and/or other short-term debt (''Short-Term Debt'') in an aggregate amount not to exceed $300 million at any one time outstanding; and (3) provide guarantees and similar credit support (''Guarantees'') to its nonutility subsidiaries in an aggregate amount not to exceed $300 million at any one time outstanding. The Commission also reserved jurisdiction over the issuance and amount of other types of securities pending completion of the record. Ameren now proposes, through the Authorization Period, to: (1) increase the issuance and sale of common stock to 25 million shares; (2) increase its Short-Term Debt up to an aggregate amount not to exceed $1.5 billion at any one time outstanding; and (3) increase its Guarantees on behalf of nonutility subsidiaries up to an aggregate amount not to exceed $1 billion at any one time outstanding. All other terms, conditions and restrictions applicable to the Common Stock, Short-Term Debt and Guarantees, as set forth

in the Financing Order, remain unchanged.

In addition, Ameren requests that the Commission release jurisdiction reserved in the Financing Order to issue and sell unsecured debentures (''Debentures''), through the Authorization Period, in an amount not to exceed $300 million.[1] Ameren represents that the aggregate principle amount of Debentures and Short-Term debt outstanding will not at any time exceed $1.5 billion.

The Debentures will be issued under an indenture (''Indenture'') to be entered into between Ameren and a national bank, as trustee, including any successor trustee appointed under the Indenture, with a supplemental indenture (''Supplemental Indenture'') to be executed in respect of each separate offering of one or more series of Debentures.

Ameren contemplates that the Debentures would be issued and sold directly to one or more purchasers in privately negotiated transactions; or, to one or more investment banking or underwriting firms or other entities who would resell the Debentures; or, to the public through underwriters selected by negotiation or competitive bidding or through selling-agents acting either as agent or as principal for resale to the public either directly or through dealers.

The maturity dates, interest rates, redemption and sinking fund provisions and conversion features, if any, with respect to the Debentures of a particular series, as well as any associated placement, underwriting or selling agent fees, commissions or discounts, if any, will be established by negotiation or competitive bidding and reflected in the applicable Supplemental Indenture and purchase agreement or underwriting agreement setting forth the terms. Ameren, however, will not issue and sell any Debenture at interest rates in excess of those generally obtainable at the time of pricing or repricing of Debentures for securities having the same or reasonably similar maturities and having reasonably similar terms, conditions and features issued by utility companies or utility holding companies of the same or reasonably comparable credit quality, as determined by the competitive capital markets.[2]

Ameren also seeks modification of the use of proceeds authorized in the Financing Order to permit the acquisition of one or more exempt wholesale generators (''EWG'') or foreign utility companies (''FUCO''). Ameren represents that ''aggregate investment'' used to acquire EWGs or FUCOs will not exceed 50% of Ameren's ''consolidated retained earnings.''[3] At September 30, 1998, Ameren's consolidated retained earnings were approximately $1.53 billion.

Ameren further represents that it will not seek to recover, through the rates of the utility subsidiaries, any losses that it may sustain in respect of any investment in an EWG or FUCO.

For the Commission, by the Division of Investment Management, under delegated authority.

Margaret H. McFarland,

Deputy Secretary.

[FR Doc. 99–2895 Filed 2–5–99; 8:45 am]

BILLING CODE 8010–01–M

[1] The Debentures (a) may be convertible into any other securities of Ameren, (b) will have maturities ranging from one to 40 years, (c) may be subject to optional and/or mandatory redemption in whole or in part, at par or at various premiums above the principle amount, (d) may be entitled to mandatory or optional sinking fund provisions, (e) may provide for reset of the coupon under a remarketing arrangement, and (f) may be called from existing investors by a third party. In addition, Ameren may, from time to time, defer the payment of interest on the Debentures of one or more series (which may be fixed or floating or ''multi-modal'' debentures, i.e., debentures where the interest is periodically reset, alternating between fixed and floating interest rates for each rest period).

[2] Ameren represents that it will not, without prior Commission approval, issue any Debentures that are not at the time of original issuance rated at least investment grade by a nationally recognized statistical rating organization.

[3] Both ''aggregate investment'' and ''consolidated retained earnings'' are defined in Rule 53(a) of the Act.

SELECTIVE SERVICE SYSTEM

Form Submitted to the Office of Management and Budget for Extension of Clearance

The following form, to be used only in the event that inductions into the armed services are resumed, has been submitted to the Office of Management and Budget (OMB) for the extension of clearance in compliance with the Paperwork Reduction Act (44 U.S. Chapter 35):

SSS–9

Title: Registrant Claim Form.

Purpose: Form is used to submit a claim for postponement of induction or reclassification.

Respondents: Registrants filing claims for either postponement or reclassification.

Frequency: One-time.

Burden: The reporting burden is five minutes or less per individual.

Copies of the above identified form can be obtained upon written request to Selective Service System, Reports Clearance Officer, 1515 Wilson Boulevard, Arlington, Virginia, 22209–2425.

Written comments and recommendations for the proposed extension of clearance of the form should be sent within 60 days of publication of this notice to Selective Service System, Reports Clearance Officer, 1515 Wilson Boulevard, Arlington, Virginia, 22209–2425.

A copy of the comments should be sent to the Office of Information and Regulatory Affairs, Attention: Desk Officer, Selective Service System, Office of Management and Budget, New Executive Office Building, Room 3235, Washington, D.C. 20503.

Dated: January 29, 1999.

Gil Coronado,

Director.

[FR Doc. 99–2944 Filed 2–5–99; 8:45 am]

BILLING CODE 8015–01–M

SELECTIVE SERVICE SYSTEM

Forms Submitted to the Office of Management and Budget for Extension of Clearance

The following forms have been submitted to the Office of Management and Budget (OMB) for extension of clearance in compliance with the Paperwork Reduction Act (44 U.S. Chapter 35):

SSS Form No. and Title

SSS Form 152, Alternative Service Employment Agreement
SSS Form 153, Employer Data Sheet
SSS Form 156, Skills Questionnaire
SSS Form 157, Alternative Service Job Data Form
SSS Form 160, Request for Overseas Job Assignment
SSS Form 163, Employment Verification Form
SSS Form 164, Alternative Service Worker Travel Reimbursement Request
SSS Form 166, Claim for Reimbursement for Emergency Medical Care

Copies of the above identified forms can be obtained upon written request to the Selective Service System, Reports Clearance Officer, 1515 Wilson Boulevard, Arlington, Virginia 22209–2425.

No changes have been made to the above identified forms. OMB clearance is limited to requesting a three-year extension of the current expiration dates.

Written comments should be sent within 60 days after the publication of this notice to: Selective Service System,

Reports Clearance Officer, 1515 Wilson Boulevard, Arlington, Virginia 22209–2425.

A copy of the comments should be sent to Office of Information and Regulatory Affairs, Attention: Desk Officer, Selective Service System, Office of Management and Budget, New Executive Office Building, Room 3235, Washington, D.C. 20435.

Dated: January 29, 1999.

Gil Coronado,

Director.

[FR Doc. 99–2945 Filed 2–5–99; 8:45 am]

BILLING CODE 8015–01–M

SMALL BUSINESS ADMINISTRATION

Notice of District Office Name Changes

AGENCY: U.S. Small Business Administration.

ACTION: Notice of district office name changes.

SUMMARY: The U.S. Small Business Administration has changed the names of the following district offices in order to more accurately reflect the broad geographic areas that they serve.

Old Name	New Name
Casper District: 100 E. B Street, Rm. 4001, Casper, WY 82601	Wyoming District: 100 E. B Street, Rm. 4001, Casper, WY 82601
Denver District: 721 19th Street, Suite 426 Denver, CO 80202	Colorado District: 721 19th Street, Suite 426 Denver, CO 80202
Fargo District: 657 2nd Avenue, N., Room 219 Fargo, ND 58102	North Dakota District: 657 2nd Avenue, N., Room 219 Fargo, ND 58102
Helena District: 301 S. Park, Room 334 Helena, MT 59626	Montana District: 301 S. Park, Room 334 Helena, MT 59626
Salt Lake City District: 125 S. State Street, Room 2237 Salt Lake City, UT 84138.	Utah District: 125 S. State Street, Room 2237 Salt Lake City, UT 84138
Sioux Falls District: 110 South Phillips Avenue Sioux Falls, SD 57102	South Dakota District: 110 South Phillips Avenue Sioux Falls, SD 57102

EFFECTIVE DATE: February 8, 1999.

FOR FURTHER INFORMATION CONTACT: Jo Ann Van Vechten, 202–205–6808.

Dated: January 29, 1999.

Jo Ann Van Vechten.

Acting Associate Administrator for Field Operations.

[FR Doc. 99–2916 Filed 2–5–99; 8:45 am]

BILLING CODE 8025–01–P

TENNESSEE VALLEY AUTHORITY

Termination of Environmental Impact Statement Process: Proposed Exercise of Option Purchase Agreement With LSP Energy Limited Partnership for Supply of Electric Energy

AGENCY: Tennessee Valley Authority.

ACTION: Notice.

SUMMARY: The Tennessee Valley Authority is announcing that it is terminating the environmental impact statement (EIS) for the Proposed Exercise of Option Purchase Agreement With LSP Energy Limited Partnership for Supply of Electric Energy.

FOR FURTHER INFORMATION CONTACT: Greg Askew, NEPA Administration, Tennessee Valley Authority, 400 West Summit Hill Drive, Mail Stop WT 8C–K, Knoxville, Tennessee 37902, 423–632–6418 or gaskew@tva.gov.

SUPPLEMENTARY INFORMATION: The Tennessee Valley Authority (TVA) no longer holds an option to purchase electric power from the proposed power plant to be constructed by L.S. Power and located at Batesville, Mississippi. As a consequence, TVA is terminating the environmental impact statement associated with L.S. Power's proposed power plant at Batesville. A Notice of Intent to prepare this EIS was published in the **Federal Register** on August 14, 1996, pages 42299–42300. A Notice of Availability of a draft EIS (EIS No. 970181) was published by the Environmental Protection Agency in the **Federal Register** on May 23, 1997 page 28469–28470.

Dated: January 28, 1999.

Kathryn J. Jackson,

Executive Vice President, Resource Group.

[FR Doc. 99–2854 Filed 2–5–99; 8:45 am]

BILLING CODE 8120–08–M

DEPARTMENT OF TRANSPORTATION

Office of the Secretary

Application of Sun Jet International, Inc., for Fitness Redetermination

AGENCY: Department of Transportation.

ACTION: Notice of order to show cause (Order 99–2–17) Docket OST–98–3957.

SUMMARY: The Department of Transportation is directing all interested persons to show cause why it should not issue an order finding Sun Jet International, Inc., fit, willing, and able, to resume interstate passenger charter air transportation operations.

DATES: Persons wishing to file objections should do so no later than February 12, 1999.

ADDRESSES: Objections and answers to objections should be filed in Docket OST–98–3957 and addressed to the Department of Transportation Dockets (SVC–124.3, Room PL–401), 400 Seventh Street, SW, Washington, DC 20590, and should be served upon the parties listed in Attachment A to the order.

FOR FURTHER INFORMATION CONTACT: Ms. Delores King, Air Carrier Fitness Division (X–56, Room 6401), U.S. Department of Transportation, 400 Seventh Street, SW., Washington, DC 20590, (202) 366–2343.

Dated: February 2, 1999.

Charles A. Hunnicutt,

Assistant Secretary for Aviation and International Affairs.

[FR Doc. 99–2848 Filed 2–5–99; 8:45 am]

BILLING CODE 4910–62–P

DEPARTMENT OF TRANSPORTATION

Coast Guard

[USCG–1998–3584]

Proposed Modernization of the Coast Guard National Distress System

AGENCY: Coast Guard, DOT.

ACTION: Notice of the availability of the finding of no significant impact (FONSI) for the National Distress System Modernization Project (NDSMP).

SUMMARY: In accordance with the National Environmental Policy Act and the Council of Environmental Quality Regulations, the Coast Guard has approved its Programmatic Environmental Assessment (PEA) for the National Distress System Modernization Project (NDSMP). Based

on the final PEA, the Coast Guard makes a finding of no significant impact (FONSI) for the proposed NDSMP Action.

ADDRESSES: The FONSI and final PEA are available for inspection or copying at the Docket Management Facility, U.S. Department of Transportation, Room PL 401, 400 Seventh Street SW., Washington DC. between the hours of 9 a.m. and 5 p.m. Monday through Friday, except Federal holidays. The telephone number to the Docket Management Facility is (202) 366–9329. You may also access the final PEA and FONSI on the Internet at the Web Sites: *http://dms.dot.gov* and *http://ndsmp.spawar.navy.mil.*

FOR FURTHER INFORMATION CONTACT: For questions on this notice, contact Mr. Gerald Busch, Commandant (G–AIR), U.S. Coast Guard, 2100 Second Street SW, Washington, DC. 20593–0001, telephone: (202) 267–2643. For questions on viewing this docket contact Dorothy Walker, Chief, Dockets, Department of Transportation, telephone (202) 366–9329.

SUPPLEMENTARY INFORMATION: The final PEA is based on the draft PEA, which was published in the **Federal Register** on June 5, 1998 (63 FR 30803), and reflects, as appropriate, comments received on the draft PEA.

Dated: January 11, 1999.

R.J. Casto,

Rear Admiral, U.S. Coast Guard, Assistant Commandant for Acquisition.

[FR Doc. 99–2972 Filed 2–5–99; 8:45 am]

BILLING CODE 4810–15–M

DEPARTMENT OF TRANSPORTATION

Federal Aviation Administration

Intent To Prepare a Supplemental Environmental Assessment for the Proposed Actions Related to the Grand Canyon National Park and To Conduct Scoping

AGENCY: Federal Aviation Administration (FAA), DOT.

ACTION: Notice of intent; request for comment.

SUMMARY: The FAA, in cooperation with the Department of the Interior (DOI), announces its intent to prepare a Supplemental Environmental Assessment (EA) pursuant to the National Environmental Policy Act (NEPA) of 1969, as amended and applicable environmental laws, regulations and orders. This supplemental EA will address the following proposed actions: 1) new and modifications to existing air tour routes for commercial aircraft operating in the Special Flight Rules Area (SFRA) in the vicinity of Grand Canyon National Park (GCNP), identified as Special Federal Aviation Regulation Number 50–2 (SFAR 50–2); 2) new and modifications to the airspace in the SFRA; and, 3) a limitation on the number of operations by commercial air tour aircraft in the SFRA. These actions represent concepts that are presently under consideration by the FAA. Any changes to the airspace or the air tour routes will be subject to the public notice and comment procedures.

DATES: Written comments must be received on or before March 5, 1999. Questions concerning the supplemental EA or the process being applied by the FAA should be directed to William J. Marx at the address listed below or at (202) 267–3075.

ADDRESSES: Comments on this Notice of Intent may be delivered or mailed, in triplicate, to: Federal Aviation Administration, Attention; William J. Marx, Air Traffic Airspace Management, Environmental Programs Division, ATA–300, 800 Independence Avenue, SW., Washington, DC 20591. Comments my be examined at the above address between 9 a.m. and 4 p.m. weekdays, except Federal holidays.

FOR FURTHER INFORMATION CONTACT: William J. Marx in writing at the above address or via telephone at (202) 267–3075.

SUPPLEMENTARY INFORMATION: Based upon further discussions with interested parties and consultation with Native American tribal representatives, the FAA and DOI are specifically considering new commercial air tour routes in the Sanup area and expanding the Desert View Flight Free Zone further east. To a greater degree than existing and prior proposed commercial air tour routes, these proposed actions would minimize impact on traditional cultural properties that were identified during consultation with Native American tribal representatives pursuant to Section 106 of the National Historic Preservation Act. The scoping process will consist of a public comment period for involved and interested agencies and persons to submit written comments representing the concerns and issues they believe should be addressed in the supplemental EA.

Background

On May 12, 1997 (62 FR 38233; May 15, 1997) the FAA issued a Notice proposing to modify two flight free zones (FFZ) within GCNP with two corridors through the FFZ. On July 10, 1998 (63 FR 38233; July 15, 1998) the FAA, in consultation with DOI, withdrew this NPRM because the agencies determined not to proceed with an air tour route in the vicinity of National Canyon and were considering alternatives to this route. In addition, a companion document to 63 FR 38233 was published in the **Federal Register** that amended the Notice No. 96–15 (Noise Limitations NPRM), by removing two sections, which first proposed a National Canyon Corridor (63 FR 38232; July 10, 1998). For a comprehensive history of actions taken and proposed between December 1996 and May 1997, please see the NPRM to extend SFAR 50–2 (63 FR 67544; December 7, 1998).

The Supplemental EA

Information, data, opinions, and comments obtained throughout the course of the scoping process may be used in the preparation of the supplemental EA. The purpose of this Notice of Intent is to inform the public and local, State, and Federal government agencies that a supplemental EA will be prepared. Also to provide those interested with an opportunity to present their opinions, comments, information, or other relevant observations concerning alternatives and potential environmental impacts relating to implementation of these proposals, particularly in the Sanup area. The proposed actions are concepts presently under consideration by the FAA and DOI.

There is currently a cap on the number of commercial sightseeing aircraft that can operate in the SFRA (61 FR 69317; December 31, 1996). The FAA is also considering rulemaking to establish a cap on the number of flights that these sightseeing aircraft can operate.

To maximize the opportunities for public participation in this environmental process, the FAA will mail copies of this Notice and a graphic (labeled for planning purposes only) showing the proposed changes to the air tour routes and proposed modifications to the airspace to those parties listed in Appendix A of the October 17, 1997 Written Reevaluation. The graphic containing the proposed air tour route changes and airspace modifications is not being published in today's **Federal Register** due to the detail on the charts. Again these proposed actions represent a concept presently under consideration by the FAA and DOI. Any changes to the airspace configuration or the air tour routes will be subject to public notice and comment procedures.

In addition, the FAA will utilize for scoping the public comments on the

Grand Canyon Final Rule, the Notice of Availability of Proposed Commercial Air Tour Routes, and the Notice of Proposed Rulemaking (NPRM), each dated December 31, 1996, the Notice of Proposed Rulemaking for Establishment of Corridors in the GCNP SFRA and the Notice of Availability of Commercial Air Tour Routes, both dated May 15, 1997, the Notice of Clarification dated October 31, 1997, the Notice of Meeting [Flagstaff] dated April 10, 1998 (63 FR 18964; April 15, 1998) and the final Environmental Assessment and written reevaluations prepared in support of these Notices and rulemaking documents.

The commercial air tour routes will be issued for public comment in a Notice of Availability of Proposed Air Tour Routes concurrently with Notices of Proposed Rulemaking for the airspace modification and limitation on operations.

The FAA expects to issue the supplemental EA in the summer of 1999, concurrently for public comment with these documents. The FAA plans to provide a period of sixty days for public comment on the supplemental EA. The public will be notified about the availability of the supplemental EA for comment through the **Federal Register** and other appropriate media.

Any person may have their name added to the mailing list, receive a copy of the graphic containing the proposed changes and modifications, and/or obtain a copy of the supplemental EA when it becomes available, by submitting a request to the FAA contact identified above.

Issued in Washington, D.C. on February 3, 1999.

William J. Marx,

Manager, Environmental Programs Division, Office of Air Traffic Airspace Management.

[FR Doc. 99–2934 Filed 2–5–99; 8:45 am]

BILLING CODE 4910–13–M

DEPARTMENT OF TRANSPORTATION

National Highway Traffic Safety Administration

[U.S. DOT Docket No. NHTSA–99–5020]

Reports, Forms, and Record Keeping Requirements

AGENCY: National Highway Traffic Safety Administration (NHTSA), DOT.

ACTION: Request for public comment on proposed collection of information.

SUMMARY: Before a Federal Agency can collect certain information from the public, it must receive approval from the Office of Management and the Budget (OMB). Under new procedures established by the Paperwork Reduction Act of 1995, before seeking OMB approval, Federal Agencies must solicit public comment on proposed information collections, including extensions and reinstatements of previously approved collections. This document describes one collection of information for which NHTSA intends to seek OMB approval.

DATES: Comments must be received on or before April 9, 1999.

ADDRESSES: Direct all written comments to U.S. Department of Transportation Dockets, 400 Seventh Street, SW, Plaza 401, Washington, DC 20590. Docket No. NHTSA–99–5020.

FOR FURTHER INFORMATION CONTACT: Paul J. Tremont, Ph.D., Contracting Officer's Technical Representative, Office of Research and Traffic Records (NTS–31), Washington, DC 20290, telephone 202–366–5587.

SUPPLEMENTARY INFORMATION: Under the Paperwork Reduction Act of 1995, before an agency submits a proposed collection of information to OMB for approval, it must publish a document in the **Federal Register** providing for a 60-day comment period and to allow for consultation with affected agencies and members of the public concerning each proposed collection of information. The OMB has promulgated regulations describing what must be included in such a document. Under OMB's regulations (at 5 CFR 1320.8(d)), an agency must ask for public comment on the following:

(i) Whether the proposed collection of information is necessary for the proper performance of the functions of the agency, including whether the information will have practical utility;

(ii) The accuracy of the agency's estimate of the burden of the proposed collection of information, including the validity of the methods and assumptions;

(iii) How to enhance the quality, utility, and clarity of the information to be collected; and

(iv) How to minimize the burden of the collection of information on those who are to respond, including the use of appropriate automated, electronic, mechanical, or other technological collection techniques or other forms of information technology, e.g., permitting electronic submission of responses.

In response to these requirements, NHTSA asks for public comment on the following proposed collection of information:

National Survey of Drinking and Driving Attitudes and Behavior: 1999

Type of Request—New information collection requirement.

OMB Clearance Number—None.

Form Number—This collection of information uses no standard forms.

Requested Expiration Date of Approval—February 28, 2000

Summary of the Collection of Information

In 1991, NHTSA conducted the first in a series of biennial surveys of the driving-aged public (aged 16 or older) to identify patterns and trends in public attitudes and behaviors towards drinking and driving. The proposed study, to be administered in the 3rd quarter of 1999, and the fifth in this series of biennial surveys, will collect data on topics included in the first four studies (and several additional topics), including: frequency of drinking and driving and of riding with an impaired driver, ways to prevent drinking and driving, enforcement of drinking driving laws including the use of sobriety checkpoints, understanding of BAC levels and legal limits, and crash and injury experience.

The survey will be administered by telephone to a national probability sample of the driving age public (aged 16 years or older as of their last birthday). Participation by respondents is voluntary. The interview is anticipated to average 20–25 minutes; for non-drinkers and non-drivers the interview will average below 20 minutes, while for drinker-drivers it will average slightly over 20 minutes.

Interviewers will use computer assisted telephone interviewing to reduce survey administration time and to minimize data collection errors. A Spanish-language questionnaire and bi-lingual interviewers will be used to reduce language barriers to participation. All respondent's results will remain anonymous and completely confidential. Participant names are not collected during the interview and the telephone number used to reach the respondent is separated from the data record prior to its entry into the analytical database.

Description of the Need for the Information and Proposed Use of the Information

More than 327,000 persons were reported injured and more than 16,000 persons died in alcohol-related motor vehicle crashes in 1997, (Traffic Safety Facts: 1997, NHTSA-National Center for Statistics and Analysis). NHTSA is committed to the development of

effective programs to reduce the incidence of these crashes. In order to properly plan and evaluate programs directed at reducing alcohol-impaired driving, the agency needs to periodically update its knowledge and understanding of the public's attitudes and behaviors with respect to drinking and driving.

The findings from this proposed collection will assist NHTSA in addressing the problem of alcohol-impaired driving and in formulating programs and recommendations to Congress. NHTSA will use the findings to help focus current programs and activities to achieve the greatest benefit, to develop new programs to decrease the likelihood of drinking and driving behaviors, and to provide informational support to states, localities, and law enforcement agencies that will aid them in their efforts to reduce drinking and driving crashes and injuries.

Description of the Likely Respondents (Including Estimated Number, and Proposed Frequency of Response to the Collection of Information)

Under this proposed collection, a telephone interview averaging approximately 20 minutes in length would be administered to each of 6,000 randomly selected members of the general public age 16 and older. The respondent sample would be selected from all 50 states plus the District of Columbia. Interviews would be conducted with persons at residential phone numbers selected using random digit dialing. No more than one respondent per household would be selected, and each sample member would complete just one interview. Businesses are ineligible for the sample and would be not be interviewed.

Estimate of the Total Annual reporting and Record Keeping Burden Resulting From the Collection of Information

NHTSA estimates that respondents in the sample would require an average of 20 minutes to complete the telephone interview. Thus, the number of estimated reporting burden on the general public would be a total of 2000 hours for the proposed survey. The respondents would not incur any reporting or record keeping cost from the information collection.

Rose A. McMurray,

Associate Administrator for Traffic Safety Programs, National Highway Traffic Safety Administration.

[FR Doc. 99–3008 Filed 2–5–99; 8:45 am]

BILLING CODE 4910–59–P

DEPARTMENT OF TRANSPORTATION

Surface Transportation Board

[STB Finance Docket No. 33707]

Albany Bridge Company, Inc., Georgia & Florida Railroad Co., Inc., and Live Oak, Perry & Georgia Railroad Company, Inc.—Corporate Family Transaction Exemption—Gulf & Ohio Railways, Inc.

Albany Bridge Company, Inc., Georgia & Florida Railroad Co., Inc., and Live Oak, Perry & Georgia Railroad Company, Inc. (Railroad Companies), and Gulf & Ohio Railways, Inc. (G&O), have jointly filed a notice of exemption. The Railroad Companies and G&O are wholly owned by Gulf & Ohio Railways Holding Co., Inc. (Holding Company), and the Holding Company is wholly owned by H. Peter Claussen and Linda C. Claussen.[1] The Railroad Companies will be merged into G&O, with G&O as the surviving corporation.

The transaction was scheduled to be consummated on or shortly after January 21, 1999.

The proposed merger is intended to consolidate the operations of the Railroad Companies and G&O, and to eliminate administrative and operating inefficiencies, improve service, and to improve the financial viability of the surviving corporation.

This is a transaction within a corporate family of the type specifically exempted from prior review and approval under 49 CFR 1180.2(d)(3). The parties state that the transaction will not result in adverse changes in service levels, significant operational changes, or a change in the competitive balance with carriers outside the corporate family.

Under 49 U.S.C. 10502(g), the Board may not use its exemption authority to relieve a rail carrier of its statutory obligation to protect the interests of its employees. Section 11326(c), however, does not provide for labor protection for transactions under sections 11324 and 11325 that involve only Class III rail carriers. Because this transaction involves Class III rail carriers only, the Board, under the statute, may not impose labor protective conditions for this transaction.

[1] *See Abany Bridge Company, Inc., Georgia & Florida Railroad Co., Inc., Gulf & Ohio Railways, Inc., Lexington & Ohio Railroad Co., Inc,, Live Oak, Perry & Georgia Railroad Company, Inc., Piedmont & Atlantic Railroad Co., Inc., Rocky Mount & Western Railroad Co., Inc., Wiregrass Central Railroad Company, Inc.—Corporate Family Transaction Exemption—Gulf & Ohio Railways Holding Co., Inc.*, STB Finance Docket No. 33576 (STB served Apr. 10, 1998).

If the notice contains false or misleading information, the exemption is void *ab initio.* Petitions to reopen the proceeding to revoke the exemption under 49 U.S.C. 10502(d) may be filed at any time. The filing of a petition to reopen will not automatically stay the transaction.

An original and 10 copies of all pleadings, referring to STB Finance Docket No. 33707, must be filed with the Surface Transportation Board, Office of the Secretary, Case Control Unit, 1925 K Street, NW., Washington, DC 20423–0001. In addition, a copy of all pleadings must be served on Jo A. DeRoche, Weiner, Brodsky, Sidman & Kider, P.C., Suite 800, 1350 New York Avenue, NW., Washington, DC 20005–4797.

Board decisions and notices are available on our website at ''WWW.STB.DOT.GOV.''

Decided: January 29, 1999.

By the Board, David M. Konschnik, Director, Office of Proceedings.

Vernon A. Williams,

Secretary.

[FR Doc. 99–2666 Filed 2–5–99; 8:45 am]

BILLING CODE 4910–00–P

DEPARTMENT OF THE TREASURY

[Treasury Directive Number 15–29]

Delegation of Authority to the Commissioner, United States Customs Service, To Investigate Violations of 18 U.S.C. §§ 1956 and 1957

January 21, 1999.

1. *Purpose.* This Directive delegates to the Commissioner, United States Customs Service, authority to investigate violations of 18 U.S.C. §§ 1956 and 1957.

2. *Delegation.* By virtue of the authority vested in the Secretary of the Treasury by 18 U.S.C. § § 981, 1956(e) and 1957(e) and the authority delegated to the Under Secretary (Enforcement) by Treasury Order (TO) 101–05, there is hereby delegated to the Commissioner, United States Customs Service:

a. Investigatory authority over violations of 18 U.S.C. § 1956 or 1957 involving 18 U.S.C. § § 542, 545, 549, 659, 1461–63, 1465, 2251–52, 2314, 2320, and 2321; 19 U.S.C. § 1590; 21 U.S.C. § 863; offenses under § 11 of the Export Administration Act of 1979 (50 U.S.C. App. § 2410); offenses under § 206 of the International Emergency Economic Powers Act (50 U.S.C. § 1705); offenses under § 16 of the Trading With the Enemy Act (50 U.S.C. App. § 16); and offenses under § 38 of the Arms Export Control Act (22 U.S.C.

§ 2778) (relating to the exportation, intrasit, temporary import, or temporary export transactions).

b. Investigatory authority over violations of 18 U.S.C. § 1956(a)(2)(B)(ii), involving a reporting violation under 31 U.S.C. § 5316;

c. Investigatory authority over violations of 18 U.S.C. § 1956(a)(3) relating to violations within the investigatory jurisdiction of the U.S. Customs Service under paragraphs 2.a. and b.; and

d. Seizure and forfeiture authority and related authority under 18 U.S.C. § 981 relating to violations of 18 U.S.C. § 1956 or 1957 within the investigatory jurisdiction of the Customs Service under paragraphs 2.a., 2.b., and 2.c., and seizure authority under 18 U.S.C. § 981 relating to any other violation 18 U.S.C. § 1956 or 1957 if the bureau with investigatory authority is not present to make the seizure. Property seized under 18 U.S.C. § 981 where investigatory jurisdiction is with another bureau not present at the time of the seizure shall be turned over that bureau.

3. *Forfeiture Remission*. The Commissioner, United States Customs Service, is authorized to remit or mitigate forfeitures of property valued at not more than $500,000 seized pursuant to paragraph 2.d.

4. *Redelegation*. The authority delegated by this directive may be redelegated.

5. *Coordination:*

a. If at any time during an investigation of a violation of 18 U.S.C. § 1956 or 1957, the U.S. Customs Service discovers evidence of a matter within the jurisdiction of another Treasury bureau or office, the U.S. Customs Service shall immediately notify that bureau or office with investigatory jurisdiction of the investigation and invite that bureau or office to participate in the investigation. The Commissioner, U.S. Customs Service, shall attempt to resolve disputes over investigatory jurisdiction with other Treasury bureaus at the field level or, in the case of the Office of Foreign Assets Control, at the headquarters level.

b. The Under Secretary (Enforcement) shall settle dispute that cannot be resolved by the bureaus. The Under Secretary (Enforcement) shall settle disputes over investigatory jurisdiction with the Internal Revenue Service in consultation with the Commissioner, Internal Revenue Service.

c. With respect to matters discovered within the investigatory jurisdiction of a Department of Justice bureau or the Postal Service, the U.S. Customs Service shall adhere to the provisions on notice and coordination in the ''Memorandum of Understanding Among the Secretary of the Treasury, the Attorney General and the Postmaster General Regarding Money Laundering Investigations,'' dated August 16, 1990, or any such subsequent memorandum of understanding entered pursuant to 18 U.S.C. § 1956(e) or 1957(e).

d. With respect to seizure and forfeiture operations and activities within its investigative jurisdiction, U.S. Customs Service shall comply with the policy, procedures, and directives developed and maintained by the Treasury Executive Office for Asset Forfeiture. Compliance will include adhering to the oversight, reporting, and administrative requirements relating to seizure and forfeiture contained in such policy, procedures, and directives.

6. *Ratification*. To the extent that any action heretofore taken consistent with this Directive may require ratification, it is hereby approved and ratified.

7. *Authorities:*

a. 18 U.S.C. §§ 542, 545, 659, 981, 1461–1463, 1465, 1956, 1957, 2251–52, 2314, 2320 and 2321.

b. 19 U.S.C. § 1590.

c. 21 U.S.C. § 863.

d. 22 U.S.C. § 2778.

e. 31 U.S.C. § 5316.

f. 50 U.S.C. App. § 16, 50 U.S.C. 1705, and App. 2410.

g. TO 101–05, ''Reporting Relationships and Supervision of Officials, Offices and Bureaus, Delegation of Certain Authority, and Order of Succession in the Department of the Treasury,'' dated October 29, 1998 or successor documents.

h. TO 102–14, '' Delegation of Authority with Respect to the Treasury Forfeiture Fund Act of 1992,'' dated January 10, 1995 or successor documents.

8. *Cancellation*. Treasury Directive 15–29, ''Delegation of Authority to the Commissioner, United States Customs Service to Investigate Violations of 18 U.S.C. §§ 1956 and 1957,'' dated September 11, 1995, is superseded.

9. *Expiration Date*. This Directive shall expire three years from the date of issuance unless superseded or canceled prior to that date.

10. *Office of Primary Interest*. Office of the Under Secretary (Enforcement).

James E. Johnson,

Under Secretary (Enforcement).

[FR Doc. 99–2868 Filed 2–5–99; 8:45 am]

BILLING CODE 4810–25–M

DEPARTMENT OF THE TREASURY

[Treasury Directive Number 15–42]

Delegation of Authority to the Commissioner, Internal Revenue Service, To Investigate Violations of 18 U.S.C. 1956 and 1957

January 21, 1999.

1. *Purpose*. This Directive delegates to the Commissioner, Internal Revenue Service (IRS), authority to investigate violations of 18 U.S.C. 1956 and 1957.

2. *Delegation*. By virtue of the authority vested in the Secretary of the Treasury by 18 U.S.C. 981, 1956(e), 1957(e) and the authority delegated to the Under Secretary (Enforcement) by Treasury Order (TO) 101–05, there is hereby delegated to the Commissioner, IRS:

a. Investigatory authority over violations of 18 U.S.C. 1956 and 1957 where the underlying conduct is subject to investigation under Title 26 or under the Bank Secrecy Act, as amended; or 31 U.S.C. 5311–5328 (other than violations of 31 U.S.C. 5316);

b. Seizure and forfeiture authority over violations of 18 U.S.C. 981 relating to violations of:

(1) 31 U.S.C. 5313 and 5324; and

(2) 18 U.S.C. 1956 and 1957 which are within the investigatory jurisdiction of IRS pursuant to paragraph 2.a.; and

c. Seizure authority relating to any other violation of 18 U.S.C. 1956 or 1957 if the bureau with investigatory authority is not present to make the seizure. Property seized under 18 U.S.C. 981 where investigatory jurisdiction is solely with another bureau not present at the time of the seizure shall be turned over to that bureau.

3. *Forfeiture Remission*. The Commissioner, IRS, is authorized to remit or mitigate forfeitures of property valued at not more than $500,000 seized pursuant to paragraph 2.b.

4. *Redelegation*. The authority delegated by this directive may be redelegated.

5. *Coordination*.

a. If at any time during an investigation of a violation of 18 U.S.C. 1956 or 1957, IRS discovers evidence of a matter within the jurisdiction of another Treasury bureau, to the extent authorized by law, IRS shall immediately notify that bureau of the investigation and invite that bureau to participate in the investigation. The Commissioner, IRS, shall attempt to resolve disputes over investigatory jurisdiction with other Treasury bureaus at the field level.

b. The Under Secretary (Enforcement) shall settle disputes that cannot be

resolved by the bureaus in consultation with the Commissioner, IRS.

c. With respect to matters discovered within the investigatory jurisdiction of a Department of Justice bureau or the Postal Service, IRS shall adhere to the provisions on notice and coordination in the ''Memorandum of Understanding Among the Secretary of the Treasury, the Attorney General and the Postmaster General Regarding Money Laundering Investigations,'' dated August 16, 1990, or any such subsequent memorandum of understanding entered pursuant to 18 U.S.C. 1956(e) or 1957(e).

d. With respect to seizure and forfeiture operations and activities within its investigative jurisdiction, IRS shall comply with the policy, procedures, and directives developed and maintained by the Treasury Executive Office for Asset Forfeiture. Compliance will include adhering to the oversight, reporting, and administrative requirements relating to seizure and forfeiture contained in such policy, procedures, and directives.

6. *Ratification.* To the extent that any action heretofore taken consistent with this Directive may require ratification, it is hereby approved and ratified.

7. *Authorities.*

a. 18 U.S.C. 981, 1956 and 1957.

b. 31 U.S.C. 5311–5328 (other than violations of 31 U.S.C. 5316).

c. TO 101–05, ''Reporting Relationships and Supervision of Officials, Offices and Bureaus, Delegation of Certain Authority, and Order of Succession in the Department of the Treasury,'' dated October 29, 1998, or successor documents.

d. TO 102–14, ''Delegation of Authority with Respect to the Treasury Forfeiture Fund Act of 1992,'' dated January 10, 1995, or successor documents.

8. *Cancellation.* Treasury Directive 15–42, ''Delegation of Authority to the Commissioner, Internal Revenue Service to Perform Functions Under the Money Laundering Control Act of 1986, as amended,'' dated September 11, 1995, is superseded.

9. *Expiration Date.* This Directive shall expire three years from the date of issuance unless superseded or canceled prior to that date.

10. *Office of Primary Interest.* Office of the Under Secretary (Enforcement).

James E. Johnson,

Under Secretary (Enforcement).

[FR Doc. 99–2869 Filed 2–5–99; 8:45 am]

BILLING CODE 4810–25–P

DEPARTMENT OF THE TREASURY

[Treasury Order Number 101–05]

Reporting Relationships and Supervision of Officials, Offices and Bureaus, Delegation of Certain Authority, and Order of Succession in the Department of the Treasury

January 7, 1999.

By virtue of the authority vested in the Secretary of the Treasury, including the authority vested by 31 U.S.C. 321(b), and Executive Order (E.O.) 11822, dated December 10, 1974, it is ordered that:

1. The Deputy Secretary shall report directly to the Secretary.

2. The Chief of Staff shall report directly to the Secretary and shall exercise supervision over the Director, Secretary's Scheduling Office, and the Executive Secretary.

3. The Executive Secretary shall report directly to the Chief of Staff and shall exercise supervision over the functions of the Executive Secretariat Correspondence Unit; the Office of Public Correspondence; and, for purposes of administrative and managerial control, over the Special Assistant to the Secretary (National Security). The Special Assistant to the Secretary (National Security) shall report to the Secretary and the Deputy Secretary.

4. The following officials shall report through the Deputy Secretary to the Secretary and shall exercise supervision over those officers and organizational entities set forth on the attached organizational chart:

Under Secretary (International Affairs)
Under Secretary (Domestic Finance)
Under Secretary (Enforcement)
General Counsel
Assistant Secretary (Legislative Affairs and Public Liaison)
Assistant Secretary (Public Affairs)
Assistant Secretary (Economic Policy)
Assistant Secretary (Tax Policy)
Assistant Secretary (Management) and Chief Financial Officer
Commissioner of Internal Revenue
Comptroller of the Currency
Director, Office of Thrift Supervision

5. The Inspector General and the Treasury Inspector General for Tax Administration shall report to and be under the general supervision of the Secretary and the Deputy Secretary.

6. The Assistant Secretary (Management) serves as the Department's Chief Financial Officer pursuant to Chapter 9 of Title 31, U.S.C., and serves as the Department's Chief Operating Officer for purposes of the Presidential Memorandum, ''Implementing Management Reform in the Executive Branch,'' dated October 1, 1993.

7. The Deputy Assistant Secretary (Information Systems) reporting to the Assistant Secretary (Management) and Chief Financial Officer is designated as the Department's Chief Information Officer pursuant to Division E of the Clinger-Cohen Act of 1996, and E.O. 13011, dated July 16, 1996, and shall have direct access to the Secretary to the extent required by that Act and related statutes.

8. The Deputy Secretary is authorized, in that official's own capacity and that official's own title, to perform any functions the Secretary is authorized to perform and shall be responsible for referring to the Secretary any matter on which action would appropriately be taken by the Secretary. Any action heretofore taken by the Deputy Secretary in that official's own title is hereby affirmed and ratified as the action of the Secretary.

9. The Under Secretaries, the General Counsel, and the Assistant Secretaries are authorized to perform any functions the Secretary is authorized to perform. Each of these officials will ordinarily perform under this authority only functions which arise out of, relate to, or concern the activities or functions of, or the laws administered by or relating to, the bureaus, offices, or other organizational units over which the incumbent has supervision. Each of these officials shall perform under this authority in the official's own capacity and the official's own title and shall be responsible for referring to the Secretary any matter on which action would appropriately be taken by the Secretary. Any action heretofore taken by any of these officials in that official's own title is hereby affirmed and ratified as the action of the Secretary.

10. The following officials shall, in the order of succession indicated, act as Secretary of the Treasury in case of the death, resignation, absence or sickness of the Secretary and other officers succeeding the incumbent, until a successor is appointed, or until the absence or sickness shall cease:

a. Deputy Secretary;

b. The following individuals, in the order of the date on which they were first appointed to a position within the Department requiring appointment by the President by and with the advice and consent of the Senate:

- Under Secretary (International Affairs);
- Under Secretary (Domestic Finance); and
- Under Secretary (Enforcement);

c. General Counsel; and

d. Assistant Secretaries, appointed by the President with Senate confirmation, in the order designated by the Secretary.

11. *Cancellation.* Treasury Order 101–05, ''Reporting Relationships and Supervision of Officials, Offices and Bureaus, Delegation of Certain Authority, and Order of Succession in the Department of the Treasury,'' dated October 29, 1998, is superseded as of this date.

12. *Office of Primary Interest.* Office of Organizational Improvement.

Robert E. Rubin,

Secretary of the Treasury.

Attachment

BILLING CODE 4810–25–P

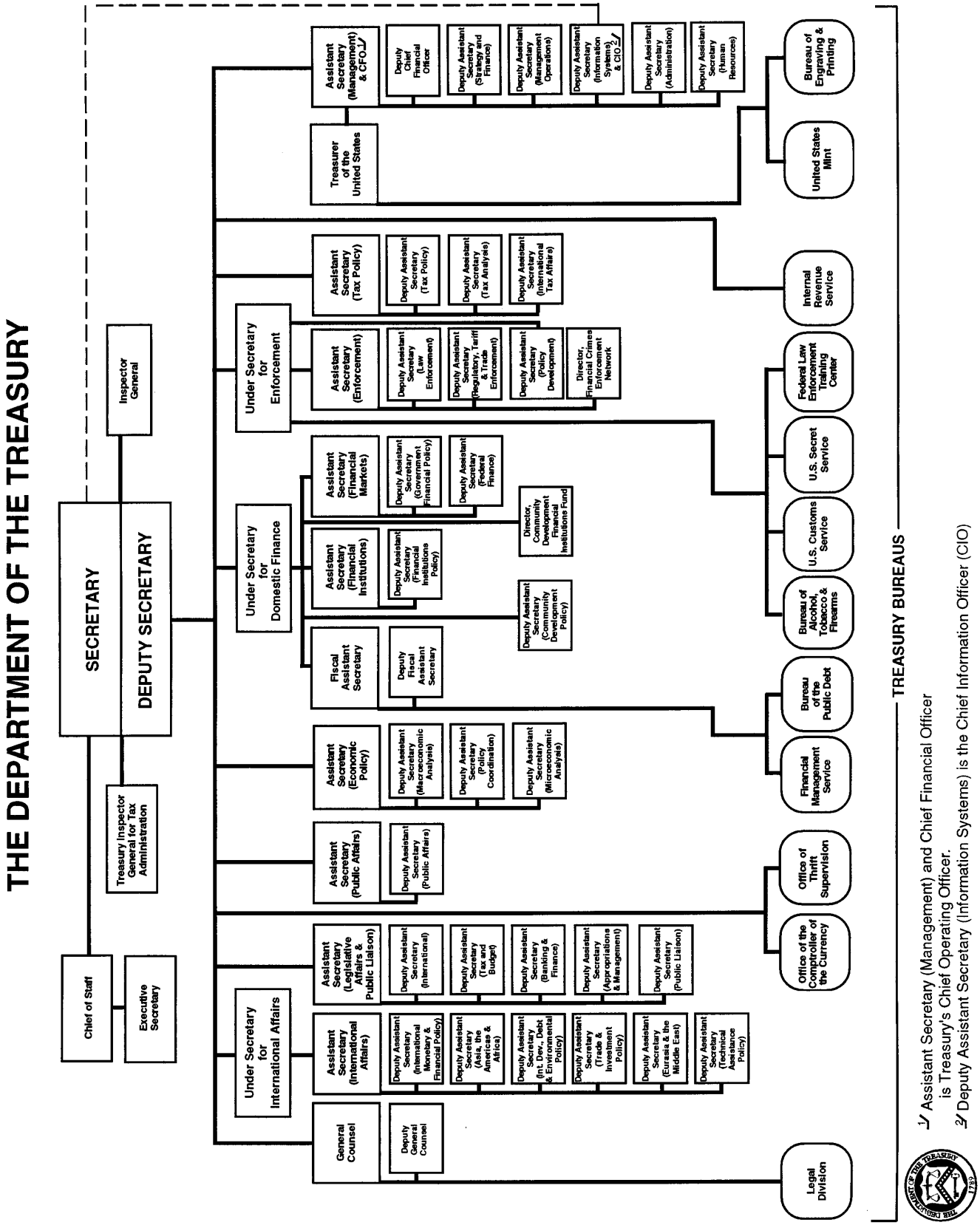

[FR Doc. 99–2870 Filed 2–5–99; 8:45 am]

BILLING CODE 4810–25–C

Corrections

Federal Register
Vol. 64, No. 25
Monday, February 8, 1999

This section of the FEDERAL REGISTER contains editorial corrections of previously published Presidential, Rule, Proposed Rule, and Notice documents. These corrections are prepared by the Office of the Federal Register. Agency prepared corrections are issued as signed documents and appear in the appropriate document categories elsewhere in the issue.

FEDERAL COMMUNICATIONS COMMISSION

47 CFR Part 2

[IB Docket No. 97-95; FCC 98-336]

Allocation and Designation of Spectrum for Fixed-Satellite and Wireless Services in the 36.0-51.4 GHz Frequency Band, and Allocation of Spectrum in the 37.0-38.0 GHz and 40.0-40.5 GHz Band for Government Operations

Correction

In rule document 99–974 beginning on page 2585 in the issue of Friday, January 15, 1999, make the following corrections:

§ 2.106 [Corrected]

1. On page 2588, in the table, in the first column, under 40.0–40.5 GHz, in the third and fourth lines, ''space–to–Earth'' should read ''Earth–to–space''.
2. On page 2589, in the table, in the fifth column, under 40.5–41.0 GHz, ''Mobile'' should be added under ''Fixed''.
3. On the same page, in the table, in the fifth column, under 41.0–42.5 GHz, ''Fixed'' should read ''FIXED'' and ''mobile'' should read ''MOBILE''.
4. On page 2590, in the table, in the first column, under 46.9–47.0 GHz, ''FIXED'' should be removed.
5. On the same page, in the table, in the fourth column, under 47.0–47.2 GHz, ''AMATEUR–SATELLITE'' should be removed.
6. On the same page, in the table, in the same column, under 50.4–51.4 GHz, ''Mobile–Satellite'' should read ''MOBILE–SATELLITE''.
7. On the same page, in the table, in the fifth column, under 46.9–47.0 GHz, ''FIXED'' should be added above ''MOBILE''.
8. On the same page, in the table, in the same column, under 47.0–47.2 GHz, ''AMATEUR–SATELLITE'' should be added under ''AMATEUR''.
9. On the same page, in the table, in the same column, under 50.4–51.4 GHz, ''Mobile–Satellite'' should read ''MOBILE–SATELLITE''.

[FR Doc. C9–974 Filed 2–5–99; 8:45 am]

BILLING CODE 1505–01–D

DEPARTMENT OF HOUSING AND URBAN DEVELOPMENT

24 CFR Part 990

[Docket No. FR-4425-N-01]

Operating a Fund Rule; Notice of Intent to Establish a Negotiated Rulemaking Committee and Notice of First Meeting

Correction

Proposed rule document 99-2572 was inadvertently published in the Rules and Regulations section of the issue of Wednesday, February 3, 1999, beginning on page 5570. It should have appeared in the Proposed Rules section.

[FR Doc. C9–2572 Filed 2–5–99; 8:45 am]

BILLING CODE 1505–01–D

DEPARTMENT OF TRANSPORTATION

Federal Aviation Administration

14 CFR Part 71

[Airspace Docket No. 98-ACE-55]

Amendment to Class E Airspace; Des Moines, IA

Correction

In rule document 99–1096 beginning on page 2823 in the issue of Tuesday, January 19, 1999, make the following correction(s):

§ 71.1 [Corrected]

On page 2824, in the second column, in § 71.1, in the first paragraph of the airspace description, in the eighth line, after ''each'' add ''side''.

[FR Doc. C9–1096 Filed 2–5–99; 8:45 am]

BILLING CODE 1505–01–D

federal register

Monday
February 8, 1999

Part II

Department of Education

Office of Postsecondary Education; Notice Inviting Applications for New Awards and Final Procedures and Requirements for Fiscal Year (FY) 1999 Competitions Under the Teacher Quality Enhancement Grant Programs; Notice

DEPARTMENT OF EDUCATION

[CFDA NO: 84.336]

Office of Postsecondary Education; Notice Inviting Applications for New Awards and Final Procedures and Requirements for Fiscal Year (FY) 1999 Competitions Under the Teacher Quality Enhancement Grant Programs

SUMMARY: The Assistant Secretary for Postsecondary Education (Assistant Secretary) invites applications for new awards for Fiscal Year (FY) 1999 for the Teacher Quality Enhancement Grant Programs for States and Partnerships authorized by sections 201–205 of the Higher Education Act (HEA), as amended by the Higher Education Amendments of 1998. The Assistant Secretary also announces final procedures and requirements to govern the competitions and FY 1999 awards.

PURPOSE OF PROGRAM: See the **SUPPLEMENTARY INFORMATION** section of this notice for a description of the Teacher Quality Enhancement Grant Programs.

FOR FURTHER INFORMATION CONTACT: Louis J. Venuto, Higher Education Programs, Office of Postsecondary Education, 400 Maryland Ave. SW., Portals Building, Suite 600, Washington, D.C. 20202–5131: Telephone: (202) 708–8596. Inquiries also may be sent by e-mail to: Louis__Venuto@ed.gov or by FAX to: (202) 260–9272.

Individuals who use a telecommunications device for the deaf (TDD) may call the Federal Information Relay Service (FIRS) at 1–800–877–8339 between 8 a.m. and 8 p.m., Eastern time, Monday through Friday.

Individuals with disabilities may obtain this document in an alternate format (e.g., Braille, large print, audiotape, or computer diskette) upon request to the contact person listed in the preceding paragraph. Individuals with disabilities may obtain a copy of the application package in an alternative format, also, by contacting that person. However, the Department is not able to reproduce in an alternate format the standard forms included in the application package.

Eligible Applicants: The Secretary invites applications from States and from eligible partnerships comprised, at minimum, of an institution of higher education with an eligible teacher preparation program, a school of arts and sciences, and a high-need local educational agency (LEA). These terms are defined in section 203 of the HEA.

Applicability of Regulations: The following provisions of EDGAR contained Title 34 of the Code of Federal Regulations (CFR) apply to the Teacher Quality Enhancement Grant Programs: 34 CFR Parts 74, 75, 77, 79, 80, 82, 85, and 86. However, section 75.590, regarding a project evaluation to be submitted at the end of the final year of the grant, does not apply to recipients of State Program grants.

Waiver of Proposed Rulemaking

In accordance with the Administrative Procedure Act (5 U.S.C. 553), it is the practice of the Department of Education to offer interested parties the opportunity to comment on proposed rulemaking documents. However, in accordance with section 437(d)(1) of the General Education Provisions Act, the Secretary has determined that because it is not possible to offer the public an opportunity for comment on proposed rulemaking under the Teacher Quality grant programs and still make awards by September 30, 1999, as required by law, it is desirable to waive public comment for the first year competition of this new discretionary grant program. This waiver will apply only to the criteria, procedures, and requirements included in this notice for awarding FY 1999 Teacher Quality Enhancement Program grants. Any criteria and procedures that the Department establishes for the award of grants under these programs in future years will be based on experiences with this FY 1999 award process, and will be published in proposed form in the **Federal Register** with an opportunity for interested parties to comment.

Applications Available: On or before February 11, 1999. The Department also expects that application packages will be available electronically through the internet on February 11, 1999, at the Department's website: http://www.ed.gov/offices/OPE/heatqp/index.html

BILLING CODE 4000–01–P

CFDA No. and Name	Pre-Applications	Application Deadline Date	Deadline for Inter-governmental Review	Available Funds	Estimated Range of Awards (per year)	Project Period	Estimated Average Size of Award (per year)	Estimated Number of Awards
Teacher Quality Enhancement Grant Programs								
1. State Grants Program	N/A	4/16/99	6/15/99	33,300,000	Up to 5,000,000	36 mos	$700,000 to 2,500,000	15-20
2. Teacher Recruitment Grants Program	N/A	4/16/99	6/15/99	9,600,000	Up to 500,000	36 mos	495,000	25
3. Partnership Grants Program	4/2/99	7/9/99	6/15/99	33,300,000	Up to 3,500,000	60 mos	1,000,000 to 2,800,000	15-20

NOTE: The Department is not bound by any estimates in this notice.

BILLING CODE 4000–01–C

Note: Information about six regional workshops the Department has scheduled between February 17 and March 2, 1999, to answer questions about the Teacher Quality Programs and to provide general assistance in preparing applications for each of the programs, is included in an appendix to this notice.

SUPPLEMENTARY INFORMATION: On October 8, 1998, the President signed into law the Higher Education Amendments of 1998. Title II of this law addresses the Nation's need to ensure that new teachers enter the classroom prepared to teach all students to high standards by authorizing, as Title II of the Higher Education Act, Teacher Quality Enhancement Grants for States and Partnerships. The new Teacher Quality programs provide an historic opportunity to effect positive change in the recruitment, preparation, licensing, and on-going support of teachers in America. The programs are designed to increase student achievement by implementing comprehensive approaches to improving teacher quality.

More specifically, the Teacher Quality Enhancement Grant Programs include three new competitive grant programs:

State Grants Program: Competitive grants to States will support the implementation of comprehensive statewide reforms to improve the quality of a State's teaching force. By law, State activities must include one or more of the following activities: reforming teacher certification or licensure standards; implementing reforms to hold institutions of higher education accountable for preparing teachers who are highly competent in their subject areas; providing prospective teachers with alternative pathways into teaching; implementing programs of support for teachers during their initial periods of teaching and establishing, expanding, or improving alternative routes to State certification; developing effective methods of recruiting and rewarding highly competent teachers and removing incompetent or unqualified teachers; recruiting teachers for high-poverty urban and rural areas; and developing ways teachers can address the problem of social promotion.

Partnership Grants For Improving Teacher Preparation Program: The purpose of the Partnership program is to bring teacher preparation programs, schools of arts and sciences, and high-need school districts and schools together (as appropriate with other stakeholders) to create fundamental change and improvement in traditional teacher education programs—thereby increasing teachers' capacity to help *all* students learn to high standards. Designed to support highly committed partnerships that will accelerate the change process in teacher education, the program will (1) strengthen the vital role of K–12 educators in the design and implementation of effective teacher education programs, and (2) increase collaboration between departments of arts and sciences and schools of education.

The program is designed to make an important impact on teacher education and thereby to increase significantly the number of new teachers emerging from programs that have been redesigned to ensure that new teachers have the content knowledge and teaching skills to be effective.

Teacher Recruitment Grants Program: In addition, there is a great need, especially in high-poverty communities, to recruit and prepare more people to become teachers. The Teacher Recruitment Grants—awarded either to States or to partnerships among high-need LEAs, teacher preparation institutions, and schools of arts and sciences—are designed to reduce shortages of highly qualified teachers in high-need school districts.

Local partnerships between school districts and teacher preparation institutions have been found to be very effective at providing teachers for communities where they are most needed. The ''grow your own'' approach is also effective for these communities because individuals who are already members of a community are likely to remain there after they become teachers. The recruitment grants will allow individual communities to determine their needs for teachers and to recruit and prepare teachers who meet those needs. States can also play an important role in ensuring that high-need school districts are able to recruit highly qualified teachers, and they can use the recruitment grants to develop and implement effective mechanisms to do so.

Rules Applicable to These Programs for FY 1999 Competitions

In order to administer the program fairly and properly, the following rules apply to these competitions:

State Grants Program

The Department will use provisions contained in 34 CFR 75.209–75.210 to establish selection criteria that reviewers will use to make recommendations on which applicants to recommend for award. However, rather than include ''Quality of project personnel'' (75.210(e)) as a separate criterion, the Department will use, as an additional element under the criterion ''Quality of the management plan'' (section 75.210(g)), the following: The qualifications, including training and experience, of key project personnel (including consultants, if any) that are relevant to implementing the proposed project.

In addition, consistent with section 205(b)(2) of the HEA, which established priorities for projects awarded grants under the State Grants program, the Secretary includes in the selection criteria the following competitive preference:

Competitive Preference: The Secretary reviews each application to determine the extent to which the State's proposed activities in any one or more of the following statutory priorities are likely to yield successful and sustained results.

1. Projects that propose initiatives to reform State teacher certification requirements that are designed to ensure that current and future teachers possess the necessary teaching skills and academic content knowledge in the subject areas in which the teachers are certified or licensed to teach.

2. Projects that proposes innovative reforms to hold institutions of higher education with teacher preparation programs accountable for preparing teachers who are highly competent in academic content area in which the teachers plan to teach and have strong teaching skills.

3. Projects that propose the development of innovative efforts aimed at reducing the shortage of highly qualified teachers in high poverty urban and rural areas.

The Secretary awards up to ten (10) additional points on the basis of how well the application addresses this preference.

Note: *Evaluation.* In view of the public accountability required by section 206(a) of the HEA, States receiving grant awards under this program will not need to submit the end-of-project evaluation report otherwise required by 34 CFR 75.590 of the Education Department's General Administrative Regulations (EDGAR).

Partnership Grants Program

Pre-Application Process: So that all applicants have as much time as possible to design activities and develop new relationships that are needed for applications that will address these challenges, the Department will use a two-phase peer review process to select applicants for awards. All applicants must submit pre-applications by April 2, 1999 that include a narrative of no more than 10 double-spaced pages.

Peer reviewers will rate each application on its response to these topics:

1. What is the partnership's vision to produce significant and sustainable improvements in teacher education?

2. Explain what your partnership can accomplish by working together that could not be accomplished by working separately.

3. Describe key components of the change process to realize your vision. What are the components? How do they reflect best research and practice? What will the partnership do to implement these components of change?

4. Discuss the specific outcomes of the proposed project. What will change? How will you know that the project is successful?

Each of these topics (i.e., the pre-application selection criteria) is critical to the design and implementation of high-quality partnership grants for improving teacher education. Peer reviewers will rate each pre-application by assigning up to 25 points for each of these four responses. Only those applicants whose pre-applications are rated very highly in this competitive peer review process will be invited and eligible to submit full Partnership Grant applications.

Other Pre-Application Requirements: Pre-applications also will need to contain the following information:

1. Application face sheet, as well as information on whether key LEAs are in urban/rural areas and in either Empowerment Zones or Enterprise Communities.

2. An Addendum that includes—

a. The identity of each of the application's partners, and sufficient information to permit the Department to determine that the partnership meets the minimum eligibility definitions included in the ''General Program Information'' (Part C) of the application package; and

b. Relevant Budgetary Information: For the pre-application, this information is limited to—

i. An estimated budget that includes—for each year of the project—the total amount of Title II, HEA funds projected to be requested, and the projected amount or of cash or in-kind contribution from each contributing partner; and

ii. A budget narrative of no more than two double-spaced pages that addresses generally, for each year of the project, how federal grant funds and the non-federal contribution will be used.

Peer reviewers will use this budget information to gauge the scale and scope of the proposed project, and to help clarify information contained in the application narrative. Those invited to submit a full application may modify this projected budget to reflect the plan of work in the full proposal. They also will be required to submit more complete budget information in the full application.

Full Partnership Application: The Secretary will select for funding under the Partnership Program those applications that are of highest overall quality. In determining which applications to recommend for award as having the highest overall quality, reviewers will assign each application up to 110 points using the following selection criteria and competitive preference. The relative weights for each criterion are indicated in parentheses. Applicants are free to respond to these criteria in any way they choose.

These selection criteria have been designed to ensure that those partnership applications selected for funding have addressed elements that the Secretary believes are key to a successful teacher preparation partnership, and have the greatest promise of meeting the broad purposes of the program.

Each of these three broad criteria includes one or more key questions that peer reviewers will consider as they examine an application, as well as a number of key elements that are critical to a well-developed response to these questions and to the partnership's overall success. Peer reviewers will consider what the partnership will accomplish—from whatever point the partners are in implementing reform—to enable teachers to have the knowledge and teaching skills they need to teach all of their students to high standards.

To be recommended for award, peer reviewers must either—

1. Find that the application satisfactorily addresses each of the key elements that follow each question, or

2. Be satisfied that an inadequate response to an element would prevent an award to an applicant that otherwise addressed, in outstanding ways, all Selection Criteria. (Reviewers will still need to find that the applicant submitted all information required by section 203 of the HEA.

Note: Section 203(b)(1) of the HEA requires that all partnerships include at least one high-need LEA (which by definition must have one or more high-need school). The definitions of a high-need LEA (and of a high-need school) are contained in the section of this notice entitled ''Program Requirements Applicable to More Than One Program''.

These definitions present a minimum standard that any partnership application must meet to be eligible to be considered. (As noted in ''Other Important Application Information'' in the application package, all applications must include information that confirms that the partnerships are comprised of the required components—including one or more school district that is a ''high-need'' LEA.) However, while the Partnership Program needs to have the greatest possible benefit for all participating LEAs and schools, the Nation faces a particular need to address the needs of those LEAs and schools whose students are most at-risk of failure. Given the particular challenges faced by these districts and schools, the highest-quality applications are likely to be those that not only are able to provide outstanding responses to the three selection criteria, but also focus on LEAs and schools that greatly exceed the definitions of high need.

Selection Criteria and Competitive Preference

a. Significance of Project Activities: (34 points)

In assessing how well the application meets this criterion, reviewers will determine how well it responds to the following question:

How does the partnership plan to meet its objectives and ensure that, once they begin work in the classroom, new teachers have the content knowledge and teaching skills they need to enable their students to succeed?

In responding to this question, applicants should be sure to address the following key elements:

- The existence of institution-wide commitments to high-quality teacher preparation programs that integrate pedagogy and subject-area content, and that include—

1. Strong connections between teacher preparation program(s) and the school(s) of arts and sciences;

2. Permanent institutional mechanisms that reward effective collaboration with the teacher preparation programs; and

3. Significant involvement of tenured and tenure-track faculty of the teacher preparation program(s) and the school(s) of arts and sciences.

- The responsiveness of teacher preparation programs to the needs of K–12 educators in high-need LEAs through, among other things:

1. Joint activities with high-need LEAs that increase the involvement of classroom teachers and school administrators in the design, improvement, and implementation of the teacher preparation and induction programs;

2. Demonstrable evidence of an increased presence of university faculty and preservice students in participating LEA schools;

3. Revamped teacher preparation curriculum and related organizational changes within the institution for higher education; and

4. Strong organizational linkages between each participating institution of higher education and the participating LEA's.

• The partnership's commitment to using evidence of how well graduates of the teacher preparation program(s) are teaching (including evidence of how well their students are achieving) to make regular adjustments and improvements in those programs.

• The partners' commitment to share effective practices and provide technical assistance about ways to improve teacher education at each teacher preparation institution that participates in the partnership.

• The quality of the partnership activities which—

1. Must include the following mandatory activities—

a. Carrying out reform of teacher preparation programs to hold those programs accountable for producing highly competent teachers, including teachers competent to use technology effectively in their classrooms;

b. Providing good clinical experiences and mentoring for new teachers and substantially increasing the interaction between teachers, principals, and administrators and an higher education faculty; and

c. Creating opportunities for enhanced and ongoing professional development that improves the academic content knowledge of teachers in fields they are or will be certified to teach.

2. And may also include activities such as—

a. Activities to prepare teachers to work with diverse populations and parents;

b. Broad dissemination of information on effective practices used by the partnership, and coordination of partnership activities with State governors, boards of education and State agencies;

c. Developing and implementing proven methods for enhancing the managerial and leadership skills of superintendents and principals (including those of master teachers and teacher-mentors); and

d. Teacher recruitment activities that may be conducted under the Teacher Recruitment Grant Program (see section 204 of the HEA).

Note: See section 203(d) and (e) of the HEA, which identifies with greater detail the three mandatory and four permissive activities, included in Part G of the Partnership Program's application package.

• A well-considered statement, for each year of the grant, of annual goals, benchmarks, and time lines that the partnership will use to determine whether project activities are effective in meeting the partnership's objectives.

• The commitment and ability of the partnership to:

(1) Integrate its activities with other educational reform activities underway in the State(s) and communities in which the partners are located; and (2) coordinate its activities with other local, State, or federally-supported teacher training or professional development programs and with appropriate activities of the Governor, State board of education and State educational agency and agency for higher education.

b. Extent to Which the Partnership's Objectives Are Built Around the Needs of High-Need LEAs and Their High-Need Schools. (33 Points)

1. *Does the application demonstrate that the partnership has developed strong measurable objectives, including measurable objectives for—*

• Improving teacher preparation programs in the partnership; and

• Improving the quality and number of teacher education program graduates who (1) meet the teacher preparation needs of high-need school districts in the partnership, and (2) take teaching positions in high-need schools in those districts?

2. *Does the application demonstrate that the partnership's objectives build upon a clear and thorough needs assessment performed by and of all K–12 and higher education partners that—*

• Was developed with the active participation of school and district administrators and classroom teachers of all types of students?

• Focuses on what all new teachers must know and be able to do once they begin teaching in the classroom—particularly in teaching reading, mathematics, science and other core subjects?

• Includes an assessment performed by the partner institution(s) of higher education that—

Examines the state of collaboration on the campus between arts and sciences faculty and the education faculty in teacher preparation activities, and between higher education faculty and K–12 teachers and administrators;

Examines the adequacy of the clinical experiences afforded to preservice students;

Examines the adequacy of content preparation for prospective teachers; and

Explains the need to improve the overall quality of teacher preparation to better respond to the needs of LEAs, and in particular of high-need LEAs?

c. *Feasibility of Achieving Project Objectives: Quality of Project Management, Governance Structure, and the Availability and Use of Resources:* (33 Points)

In assessing how well the application meets this criterion, reviewers will determine how well it responds to the following question:

How well does the application demonstrate that the partnership will be able to achieve its objectives, and that all members of the partnership will work collaboratively to sustain, improve, and enhance project activities during and beyond the period of the project?

In addressing this question, applicants should be sure to address the following elements:

• The extent to which the partnership has an effective, inclusive, and responsive governance and decision-making structure—

1. That will permit all members of the partnership (including teachers of the high-need LEA(s)) to plan, implement, and assess the adequacy of partnership activities; and

2. Through which the fiscal agent will provide project funds, as appropriate, to other partners to permit them to implement program activities.

• The extent to which the application demonstrates that the partnership will sustain itself during and beyond the period of the grant (which may include evidence that members of the partnership have succeeded—with each other or other entities—in other significant and sustained partnering efforts).

• The extent to which members of the partnership will provide technical assistance to each other to further project objectives.

• A resource assessment that describes—

1. The (federal and non-federal) resources available to the partnership;

2. The intended uses of grant funds (including financial support, faculty participation, and time commitments), whether awarded by the Department or provided by the partners, including how grant funds will be fairly distributed among the partners with no partner retaining more than 50 percent of grant funds that the Secretary awards; and

3. The commitment of the partnership's own resources to project activities, including non-federal financial support, faculty participation, time commitments, and other in-kind services, as well as continuation of activities when the grant ends.

Note: As required by 34 CFR 75.117, all applications must include, among other

things, a multi-year budget reflecting Federal and non-Federal resources.

• The qualifications and relevant experience of the overall project director and key personnel of each partner who have responsibility for implementing project activities.

• How well the application describes how the partnership Will—

1. Regularly assess whether it is meeting its program objectives;

2. Take steps to modify project plans and activities if the partnership finds that it is not meeting its objectives; and

3. Prepare the evaluation and annual progress report that include strong performance objectives, and measures and reporting information as required by section 206(b) and (c) of the HEA.

Competitive Preference: Consistent with section 205(b)(2)(B) of the HEA, the Secretary reviews each application to determine the extent to which the partnership proposes to meet the following statutory priority: a significant role for private business in the design and implementation of the partnership. The Secretary awards up to ten (10) additional points for applications that address this preference.

Teacher Recruitment Grants Program

The Department will use provisions contained in 34 CFR 75.209–75.210 to establish selection criteria that reviewers will use to make recommendations on which applicants to recommend for award. However, rather than include ''Quality of project personnel'' (34 CFR 75.210(e)) as a separate criterion, the Department will use, as an additional element under the criterion ''Quality of the management plan ''(34 CFR 75.210(g)), the following: The qualifications, including training and experience, of key project personnel (including consultants, if any) that are relevant to implementing the proposed project.

Finally, section 204 of the HEA requires partnership and State grant recipients under the Teacher Recruitment Program to work with high-need LEAs to recruit and prepare teachers who will work in those districts and thereby help to address their teacher shortages. To ensure that program funds are used to meet the purposes of this program, States and partnerships receiving grant awards under this program (as well as any high-need LEAs participating in their projects) must ensure that teachers who have received scholarship assistance and other services under the Teacher Recruitment Program are placed, to the extent possible, in high-need schools within the high-need LEAs that participate in the partnership or State project.

Invitational Priorities: The Secretary is particularly interested in receiving applications from States and partnerships that propose to focus their efforts on recruiting members of minority or historically disadvantaged groups to become teachers in high-need LEAs and schools because of the growing gap between the diveristy of the student population and the composition of the teaching force.

In addition, in order to recruit highly competent individuals to become teachers in high-need LEAs and schools, section 204(d)(1) permits States and partnerships to use grant funds for the costs of scholarship assistance that teaching candidates need to enable them to pay the costs of completing a teacher preparation program in addition to other support services and follow-up services after they begin teaching. Alternatively, section 204(d)(2) permits States and partnerships, more generally, to use grant funds to design and implement effective mechanisms to ensure that high-need LEAs and schools are able to effectively recruit highly qualified teachers. The availability of scholarship assistance is likely to be a very useful tool in attracting well-qualified individuals to become teachers in these high-need LEAs and schools. For this reason, regardless of which approach States and partnerships take in designing their projects, the Secretary is particularly interested in receiving proposals that would provide scholarship support for prospective teachers.

Program Requirements Applicable to More Than One Program

The Department is establishing a number of requirements that, in addition to the statutory requirements in the HEA, govern two or more of the Teacher Quality Programs. These include the following:

1. Section 201(a)(2) provides a definition of ''high-need'' LEA as a public school district that serves an elementary or secondary school located in an area in which there is—

a. A high percentage of individuals from families with incomes below the poverty line;

b. A high percentage of secondary school teachers not teaching in the content area in which the teachers were trained to teach; or

c. A high teacher turnover rate.

None of the three alternative meanings can be applied equally and fairly to all applicants without further definition. Therefore, for purposes of these Teacher Quality Enhancements Grant Programs—

1. An LEA with at least one school located in an area in which there is ''a high percentage of individuals from families with incomes below the poverty line'' is a ''high-need LEA'' if—the LEA has at least one school in which 40 percent or more of the enrolled students are eligible for free (not ''free and reduced'') lunch subsidies.

2. An LEA that has one school with a ''high percentage of secondary school teachers not teaching in the content area in which the teachers were trained to teach'' is a ''high-need LEA'' if either of the following conditions holds true:

• More than 34 percent of academic classroom teachers overall (across all academic subjects) do not have a major, minor, or significant course work in their main assignment field; or

• More than 34 percent of the main assignment faculty in two of the academic departments do not have a major, minor, or significant work in their main assigned field.

For purposes of the definition above—

''*Main assignment field*'' means—the academic field in which teachers have the largest percentage of their classes.

''*Significant course work*'' means—four or more college-or graduate-level courses in the content area.

3. An LEA that serves an elementary or secondary school located in an area in which there is a high turnover rate is a ''high-need LEA'' if the LEA has an elementary or secondary school whose attrition rate is 15 percent or more in the last three school years.

Note: The Department believes that use of the percentage of teachers in high-poverty schools who do not return in the following year is a better source of data than the percentage of teachers in schools with high percentages of minority students who do not return to teach the following year—a factor proposed in the draft application package. In addition, for this third definition of high-need LEA, data is not readily available on the teacher turnover rate in schools in which the students are eligible for free lunch subsidies. Therefore, the data source for this definition and the first definition of high-need LEA (high-poverty) cannot be the same.

4. Section 205(c)(1) requires that any State that receives either a State Grant or a Teacher Recruitment Grant provide, from non-Federal sources, an amount equal to 50 percent of the amount of the grant (in cash or in kind) to carry out grant activities. This 50 percent match must be made annually, with respect to each grant award of the project period.

5. For purposes of indirect costs that may be charged to the Teacher Recruitment Program and to the Partnership Program, all funded projects

are treated as ''educational training grants.'' Therefore, consistent with 34 CFR 75.562, except for costs that may be incurred by State agencies or LEAs, a recipient's indirect cost rate is limited to the maximum of eight percent or the amount permitted by its negotiated indirect cost rate agreement, whichever is less. In addition, this same eight percent maximum indirect cost rate applies for any funds that institutions of higher education or nonprofit organizations may receive from States under the State Program.

6. The Government Performance and Results Act of 1993 (GPRA) requires all Federal programs to use performance indicators to measure their quality and effectiveness. GPRA further requires that the Department provide Annual Performance Plans to Congress that provide data on how all of the programs are performing with respect to the program performance indicators. Therefore, the Department submits an Annual Plan to Congress that provides the most recent data on the Department's five-year Strategic Plan, as well as the latest data on the performance of each program with respect to the program indicators.

7. In the event that the peer reviewers' use of these selection criteria results in an equal ranking among two or more applicants for the last available award under any of the three Teacher Quality Programs, the Department will select the applicant whose activities will focus (or have most impact) on LEAs and schools located in one (or more) of the Nation's Empowerment Zones and Enterprise Communities.

8. In the case of any application or pre-application whose narrative exceeds the 50-page double-spaced limitation for all Teacher Quality Program applications and ten-page double-spaced limitation for Partnership Program pre-applications, the Department will provide to the peer reviewers only the first 50 pages of narrative and ten pages of narrative, respectively.

9. The Title II Teacher Quality programs have a set of *draft* performance objectives and indicators that appear in Part G, ''Supplementary Information,'' in the application package. Although these performance objectives and indicators are still draft, the objectives and indicators will be finalized by February of 1999 and will look much like the draft performance indicators. All State and partnership grantees must collect data and report to the Department on their progress with respect to each of the performance indicators on all of the *final* performance indicators.

In addition, there may be a few indicators for which data will be collected by the contractor hired to conduct the national evaluation of the Title II programs. All grantees also are required to cooperate with the contractor for the national evaluation as the contractor collects data from grantees related to these indicators.

Paperwork Reduction Act Considerations

The procedures and requirements contained in this notice relate to application packages that the Department has developed under the three Teacher Quality Enhancement Grant Programs. The public may obtain copies of these packages by calling or writing the individuals identified at the beginning of this notice as the Department's contact, or through the Department's website: http://www.ed.gov/offices/OPE/heatqp/index.html

As required by the Paperwork Reduction Act, the Office of Management and Budget has approved the use of these application packages under the following OMB control number 1840–0007, expires February, 2002. As noted earlier in this notice, these application packages will be available on or before February 11, 1999.

Electronic Access to This Document.

Anyone may view this document, as well as all other Department of Education documents published in the **Federal Register**, in text or portable document format (pdf) on the World Wide Web at either of the following sites:

http://ocfo.ed.gov/fedreg.htm

http://www.ed.gov/news.html

To use the pdf you must have the Adobe Acrobat Reader Program with Search, which is available free at either of the previous sites. If you have questions about using the pdf, call the U.S. Government Printing Office at (202) 512–1530 or, toll free at 1–888–293–6498.

Anyone may also view these documents in text copy on an electronic bulletin board of the Department. Telephone: (202) 219–1511 or, toll free, 1–800–222–4922. The documents located under Option G—Files/Announcements, Bulletins, and Press Releases.

Note: The official version of the document is the document published in the **Federal Register**.

Program Authority: 20 U.S.C. 1021 *et seq.*

Dated: February 1, 1999.

David A. Longanecker,

Assistant Secretary, Office of Postsecondary Education.

Appendix

Technical Assistance Workshops on Implementation of Teacher Quality Enhancement Grant Programs

The Department of Education has scheduled six regional technical assistance workshops between February 17 and March 2, 1999, to help prospective applicants to better understand the Department's approach to implementing the competitive grant competitions to be held this spring under the Teacher Quality Enhancement Grant Programs, authorized by sections 201–204 of the Higher Education Act of 1965, as amended. Under the Teacher Quality Programs, States must submit applications for the State Program by April 16, 1999, eligible partnerships must submit pre-applications for the Partnership Program for Improving Teacher Education by April 2, 1999, and States and eligible partnerships must submit applications for the Teacher Recruitment Program by April 16, 1999. At these workshops, the public will be able to learn more about the purposes and requirements of these programs, how to apply for funds, program eligibility requirements, the application selection process, and considerations that might help them to improve the quality of their grant applications. Department of Education staff with expertise on these and other issues related to the Teacher Quality Programs will be available to answer any questions on these topics.

The locations and dates of these workshops are: February 17 B Washington, DC; February 19 B San Diego, California; February 22 B Seattle, Washington; February 25 B St. Louis, Missouri; February 26 B Dallas, Texas; and March 2, Atlanta, Georgia. Any interested parties are invited to attend these workshops.

The Department of Education has reserved a limited number of hotel rooms, at a special government per diem room rate, at each of the following hotels that will host the workshops. To reserve these rates, be certain to inform the hotel that you are attending the workshops with the Department of Education.

The meeting sites are accessible to individuals with disabilities. The Department will provide a sign language interpreter at each of the scheduled workshops. An individual with a disability who will need an auxiliary aid or service other than an interpreter to participate in the meeting (e.g., assistive listening device, or materials in an alternative format) should notify the contact person listed in this notice at least two weeks before the scheduled meeting date. Although the Department will attempt to meet a request received after that date, the requested auxiliary aid or service may not be available because of insufficient time to arrange it.

Dates, Times, and Locations of Technical Assistance Workshops

Workshop #1: Wednesday, February 17, 1999, Washington, DC, Washington Hilton

Hotel, 1919 Connecticut Avenue NW, Washington, DC 20005; Phone: (202) 483–3000. Rate: $115.00 plus tax.

Workshop #2: Friday, February 19, 1999, San Diego, California, Marriott Hotel—Mission Valley, 8757 Rio San Diego Drive, San Diego, CA 92108, Phone: (619) 692–3800. Rate: $93.00 plus tax.

Workshop #3: Monday, February 22, 1999, Seattle, Washington, Renaissance Madison Hotel, 515 Madison & Sixth Avenue, Seattle, WA 98104, Phone: 1–800–278–4159. Rate: $104.00 plus tax.

Workshop #4: Thursday, February 25, 1999, St. Louis, Missouri, Radisson Hotel & Suites, 600 North Fourth Street, St. Louis, MO 63102, Phone: (314) 621–8200. Rate: $66.00 plus tax.

Workshop #5: Friday, February 26, 1999, Dallas, Texas, Wyndham Garden Hotel/Dallas, Park Central, 8051 LB. Johnson Freeway, Dallas, TX 75251, Phone: (972) 680–3000. Rate: $89.00 plus tax.

Workshop #6: Tuesday, March 2, 1999, Atlanta, Georgia, Sheraton Gateway Hotel, 1900 Sullivan Road, College Park, GA 30337, Phone: (770) 997–1100. Rate: $90.00 plus tax.

For further information about these workshops, please call or write the Department contact identified at the beginning of this notice.

[FR Doc. 99–2720 Filed 2–5–99; 8:45 am]

BILLING CODE 4000–01–P

federal register

Monday
February 8, 1999

Part III

Department of the Interior

Office of Surface Mining Reclamation and Enforcement

30 CFR Part 914

Surface Coal Mining and Reclamation Operations on Federal Lands; State-Federal Cooperative Agreements; Indiana; Proposed Rule

DEPARTMENT OF THE INTERIOR

Office of Surface Mining Reclamation and Enforcement

30 CFR Part 914

[IN–142–FOR]

Surface Coal Mining and Reclamation Operations on Federal Lands; State-Federal Cooperative Agreements; Indiana

AGENCY: Office of Surface Mining Reclamation and Enforcement, Interior.

ACTION: Proposed rule.

SUMMARY: The Office of Surface Mining Reclamation and Enforcement (OSM) is proposing to adopt a cooperative agreement between the Department of the Interior and the State of Indiana. This agreement will allow Indiana, under the permanent regulatory program, to regulate surface coal mining and reclamation operations on Federal lands in Indiana. The Surface Mining Control and Reclamation Act of 1977 (SMCRA) provides for this type of agreement. This notice of proposed rulemaking gives you information on the terms of the proposed cooperative agreement.

DATES: *Written Comments.* We must receive written comments by 4:00 p.m., E.S.T., April 9, 1999.

Public Hearings. If requested, we will hold a public hearing on the proposed rule on March 25, 1999. We must receive your requests to speak at the hearing by 4:00 p.m., E.S.T., on March 1, 1999. If you wish to attend a hearing but not testify, you should contact the person identified under **FOR FURTHER INFORMATION CONTACT** before the hearing date to verify that we will hold a hearing.

ADDRESSES: If you wish to comment, you may submit your comments by any one of several methods. You may mail or hand carry your comments to Andrew R. Gilmore, Director, Indianapolis Field Office, Office of Surface Mining Reclamation and Enforcement, Minton-Capehart Federal Building, 575 N. Pennsylvania Street, Indianapolis, Indiana 46204–1521. You may also comment via the Internet to OSM's Administrative Record at: agilmore@mcrwg.osmre.gov.

You may submit a request for a public hearing orally or in writing to the person and address specified under **FOR FURTHER INFORMATION CONTACT**. We will announce the address, date and time for any public hearing if one is held. If you are disabled and require special accommodation to attend a public hearing, contact the person listed under **FOR FURTHER INFORMATION CONTACT**.

Copies of the Indiana program, the proposed cooperative agreement, a listing of any scheduled public hearings, and all written comments received in response to this document will be available for public review at the addresses listed below during normal business hours, Monday through Friday, excluding holidays.

Indianapolis Field Office, Office of Surface Mining Reclamation and Enforcement, Minton-Capehart Federal Building, 575 N. Pennsylvania Street, Indianapolis, Indiana 46204–1521, Telephone: (317) 226–6700.

Indiana Department of Natural Resources, 402 West Washington Street, Room C256, Indianapolis, Indiana 46204, Telephone: (317) 232–1547.

You may receive one free copy of the proposed agreement by contacting the person listed under **FOR FURTHER INFORMATION CONTACT**.

FOR FURTHER INFORMATION CONTACT: Andrew R. Gilmore, Director, Indianapolis Field Office, Telephone: 317–226–6700. E-mail: agilmore@mcrgw.osmre.gov.

SUPPLEMENTARY INFORMATION:

I. Public Comment Procedures
II. Background of the Indiana Program
III. Description of the Proposed Cooperative Agreement
IV. Procedural Determinations

I. Public Comment Procedures

Written Comments

If you are submitting written comments on the proposed rule, please be specific, limit your comments to issues pertinent to the proposed rule, and explain the reason for your recommendations. Except for comments provided electronically, please submit three copies of your comments, if possible, to our Administrative Record (see **ADDRESSES**). All comments sent to the Administrative Record will be logged into the administrative record for the rulemaking. However, we will not consider or respond to your comments when developing the final rule if they are received after the close of the comment period (see **DATES**). We will make every attempt to log all comments into the administrative record, but comments delivered to addresses other than those listed in **ADDRESSES** may not be logged in.

Please submit Internet comments as an ASCII file avoiding the use of special characters and any form of encryption. Please also include ''Attn: IN–142–FOR'' and your name and return address in your Internet message. If you do not receive a confirmation from the system that we have received your Internet message, contact us by telephone at 317–226–6700. We will make comments, including names and addresses of respondents, available for public review during regular business hours. You may request confidentiality, which we will honor to the extent allowable by law. If you wish to withhold your name or address, except for the city or town, you must state this prominently at the beginning of your comment. However, we will not consider anonymous comments. We will make all submissions from organizations or businesses, and from individuals identifying themselves as representatives or officials of organizations or businesses, available for public inspection in their entirety.

Public Hearing

If you wish to speak at the public hearing, contact the person listed under **FOR FURTHER INFORMATION CONTACT** by 4:00 p.m., E.S.T. on March 1, 1999. We will arrange, with you, the location and time of the hearing. If no one requests an opportunity to speak at a public hearing, we will not hold one.

We request that you file a written statement at the time of the hearing. It will greatly assist the transcriber. If you submit written statements in advance of the hearing, this will allow us to prepare adequate responses and appropriate questions.

We will continue the public hearing on the specified date until all persons scheduled to speak have spoken. Persons in the audience who have not been scheduled to speak, and who wish to do so, will be allowed to speak following those who have been scheduled. The hearing will end after all persons scheduled to speak and persons present in the audience who wish to speak have spoken.

Public Meeting

If only one person requests an opportunity to speak at a hearing, a public meeting, rather than a public hearing, may be held. If you wish to meet with us to discuss the proposed agreement, you may request a meeting by contacting the person listed under **FOR FURTHER INFORMATION CONTACT**. All such meetings will be open to the public and, if possible, notices of meetings will be posted at the locations listed under **ADDRESSES**. We will make a written summary of each meeting a part of the Administrative Record.

II. Background on the Indiana Program

On July 29, 1982, the Secretary of the Interior conditionally approved the Indiana program. You can find

background information on the Indiana program including the Secretary's findings, the disposition of comments, and the conditions of approval in the July 26, 1982, **Federal Register** (47 FR 32071). Later actions concerning the conditions of approval and program amendments are found at 30 CFR 914.10, 914.15, and 914.16.

III. Description of the Proposed Cooperative Agreement

By a letter dated March 10, 1998 (Administrative Record No. IND–1598), from the Indiana Department of Natural Resources, Indiana submitted a request for a State-Federal cooperative agreement under the provisions of 30 CFR 745.11. The purpose of the proposed cooperative agreement (Agreement), is to give Indiana the primary authority to administer its approved permanent regulatory program on Federal lands.

Section 523(c) of SMCRA, 30 U.S.C. 1201 *et seq.*, and the regulations at 30 CFR Part 745 allow a State and the Secretary of the Interior to enter into a permanent program Agreement if the State has an approved State program for regulating surface coal mining and reclamation operations on non-Federal and non-Indian lands. SMCRA authorizes permanent program Agreements under section 523(c) which provides that ''[a]ny State with an approved State program may elect to enter into a cooperative agreement with the Secretary to provide for State regulation of surface coal mining and reclamation operations on Federal lands within the State, provided the Secretary determines in writing that such State has the necessary personnel and funding to implement such a cooperative agreement in accordance with the provision of this Act.''

Section 745.11(b)(1) through (8) of our regulations require States to submit certain information with a request for a permanent program cooperative agreement, if the information has not been previously submitted in the State program. Indiana previously submitted much of the information relating to the budget, staffing, and equipment necessary for performing inspections at surface coal mining and reclamation operations on Federal lands. In addition, Indiana submitted a written certification from the Chief Legal Counsel of the Indiana Department of Natural Resources stating that the State does not have statutory, regulatory, or other legal constraint which would limit the ability of the Indiana Department of Natural Resources to fully comply with the terms of the proposed Agreement, section 523(c) of SMCRA, and 30 CFR Part 745.

We have included the full text of the proposed agreement as part of this proposed rulemaking. The proposed cooperative agreement may change as a result of public comment and/or further discussion with the State of Indiana. The proposed agreement, as submitted by Indiana, has sixteen articles. A brief summary of the articles appears below.

Article I: Introduction, Purpose and Responsible Agencies. This article explains the legal authority for the Agreement and states that the Agreement allows Indiana to regulate surface coal mining and reclamation operations on Federal lands in Indiana. The article designates the Natural Resource Commission (NRC) and the Division of Reclamation (DOR) of the Indiana Department of Natural Resources as the agencies responsible for administering the Agreement on behalf of the Governor of Indiana (Governor). It also designates OSM as the agency responsible for administering the Agreement on behalf of the Secretary of the Department of the Interior (Secretary). Indiana designated NRC and DOR as the administrative bodies for the approved Regulatory Program in Indiana.

Article II: Effective Date. This article provides that after signature by the Secretary and the Governor, the Agreement will become effective 30 days after publication in the **Federal Register** as a final rule.

Article III: Definitions. This article provides that the terms and phrases used in the Agreement will have the same meaning as those in SMCRA, the OSM approved State Act (Indiana Code (I.C.) 14–34), and the rules and regulations set forth as a result of those acts. The article also specifies that the State will use the definitions in its approved State program if State and Federal definitions conflict.

Article IV: Applicability. This article states that the laws, regulations, terms and conditions of Indiana's approved State program are applicable to Federal lands in Indiana except as otherwise stated in the Agreement, SMCRA, 30 CFR 740.4, 740.11(a), 745.13, and other applicable laws, Executive Orders, or regulations.

Article V: General Requirements. This article certifies that DOR and NRC have the authority under State law to carry out the terms of the Agreement. It also establishes the procedures for funding DOR's and NRC's responsibilities under the Agreement and the right of DOR or OSM to terminate the agreement if OSM cannot adequately fund the program. This article provides for DOR and OSM to exchange information and for DOR to report annually to OSM. It also requires DOR to have adequate personnel with sufficient equipment and facilities to carry out the requirements of the program. Finally, this article discusses how DOR will determine the amount of the permit application fee and how DOR will handle funds generated from permit application fees, civil penalties, and fines collected from operations on Federal lands.

Article VI: Review of Permit Application Packages. Paragraphs A through C of Article VI generally describe the procedures that the State and OSM will follow in the review and analysis of a permit application package (PAP) for operations on Federal lands. The term ''permit application package'' is defined under 30 CFR 740.5. DOR will assume primary responsibility for the review of a PAP. Where leased Federal coal is involved, OSM will prepare a mine plan decision document and obtain the Secretary's approval for the document.

The article also establishes guidelines for material to be submitted in the PAP and the procedures that OSM and DOR will use in reviewing the PAP. The article further spells out the coordination between DOR, OSM, and other Federal Agencies in conducting the reviews. Finally, the article provides guidelines for making a decision on the permit application and informing the applicable parties of the decision. The review procedures for permit revisions, renewals and the transfer, assignment or sale of permit rights are also discussed.

Article VII. Inspections. This article specifies that DOR will conduct inspections of the operations on Federal lands and will prepare and file inspection reports documenting the inspection according to the State program. DOR will also be the point of contact and the primary inspection authority in dealing with these operators. However, authorized Federal or State agencies will be allowed to conduct necessary inspections for purposes other than those covered by the Agreement. Finally, the article discusses procedures that OSM will follow when handling citizen complaints that it receives pertaining to imminent danger to the public health and safety or to significant imminent environmental harm to land, air or water resources.

Article VIII: Enforcement. This article deals with DOR's responsibility for issuing enforcement actions resulting from violations on surface coal mining and reclamation sites on Federal lands. DOR will have the lead in issuing enforcement actions except in cases

where Federal laws and Executive Orders reserve these rights to the Secretary. The article provides for DOR and OSM to exchange information concerning enforcement actions and to be mutually available to serve as witnesses in enforcement actions taken by either party.

Article IX: Bonds. This article specifies the procedures that a permittee must follow to get a performance bond to cover the operator's liability under the Act and the State program. The article discusses the assignment of the bond if the Agreement is terminated and the procedures for releasing and forfeiting bond. Finally the article states that if the operator submits a performance bond, this bond does not satisfy the requirements for the operator to also submit a Federal lease bond or lessee protection bond in certain circumstances.

Article X. Designating Areas Unsuitable for All or Certain Types of Surface Coal Mining and Reclamation Operations and Activities, Valid Existing Rights (VER), and Compatibility Determinations. The unsuitably petitions portion of the article only allows the Secretary to designate Federal lands as unsuitable for mining. The article further states the procedures DOR or OSM must follow if they receive a petition to designate land areas unsuitable for all or certain types of surface coal mining operations that could affect adjacent Federal or non-Federal lands. The VER and Compatibility Determinations portion of the article requires OSM to make VER determinations on Federal lands where proposed operations are not allowed or are limited by Section 522(e)(1) of the Act. This article also requires OSM to make determinations of compatibility under the provisions of section 522(e)(2) of the Act.

Article XI: Termination of Cooperative Agreement. This article allows the Governor or the Secretary to terminate the Agreement under the provisions of 30 CFR 745.15.

Article XII: Reinstatement of Cooperative Agreement. This article allows the Governor and the Secretary to reinstate the Agreement, under the provisions of 30 CFR 745.16, if it is terminated in whole or part.

Article XIII: Amendment of Cooperative Agreement. This article provides that the Governor and the Secretary, under the provisions of 30 CFR 745.14, may amend the Agreement by mutual consent.

Article XIV: Changes in State or Federal Standards. This article describes the procedures the Governor or the Secretary must follow when they declare new or revised performance or reclamation requirements or enforcement and administrative procedures.

Article XV: Changes in Personnel and Organization. Under the terms of this article, each party to the Agreement must notify the other of changes in personnel, organization and funding, or other changes that may affect the implementation of the Agreement.

Article XVI: Reservation of Rights. This article provides that the agreement does not cause the State or the Secretary to waive any rights they may have under laws other than SMCRA or their regulations, including but not limited to those listed in Appendix A to the Agreement.

IV. Procedural Determinations

1. Executive Order 12866—Regulatory Planning and Review

This document is not a significant rule and is not subject to review by the Office of Management and Budget under Executive Order 12866.

(1) This rule will not have an effect of $100 million or more on the economy. It will not adversely affect in a material way the economy, productivity, competition, jobs, the environment, public health or safety, or State, local, or tribal governments or communities.

(2) This rule will not create a serious inconsistency or otherwise interfere with an action taken or planned by another agency.

(3) This rule does not alter the budgetary effects or entitlements, grants, user fees, or loan programs or the rights or obligations of their recipients.

(4) This rule does not raise novel legal or policy issues.

2. Regulatory Flexibility Act

The Department of the Interior certifies that this rule will not have a significant economic impact on a substantial number of small entities under the Regulatory Flexibility Act (5 U.S.C. 601 *et seq.*). This rule will establish an Agreement between the Department of the Interior and the State of Indiana. The Agreement does not impose any new substantive requirements on the coal industry; it merely authorizes the State to regulate surface coal mining and reclamation activities on Federal lands in Indiana in lieu of the Federal government.

3. Small Business Regulatory Enforcement Fairness Act

This rule is not a major rule under 5 U.S.C. 804(2), the Small Business Regulatory Enforcement Fairness Act. This rule:

a. Does not have an annual effect on the economy of $100 million or more. The rule affects only the State of Indiana and the costs of carrying out the functions under the Agreement are offset by grants from the Federal government.

b. Will not cause a major increase in costs or prices for consumers, individual industries, Federal, State, or local government agencies, or geographic regions because the rule does not impose any new requirements on the coal mining industry or consumers. The functions being performed by the State under the Agreement are offset by grants from the Federal government.

c. Does not have significant adverse effects on competition, employment, investment, productivity, innovation, or the ability of U.S.-based enterprises to compete with foreign-based enterprises for the reasons stated above.

4. Unfunded Mandates

This rule does not impose an unfunded mandate on State, local, or tribal governments or the private sector of more than $100 million per year. The rule does not have a significant or unique effect on State, local or tribal governments or the private sector. The rule establishes a cooperative agreement at the request of the State of Indiana and will result in the delegation of authority to the State. The cost to the State of performing the duties being delegated are offset by a grant from the Federal government. A statement containing the information required by the Unfunded Mandates Reform Act (2 U.S.C. 1531, *et seq.*) is not required.

5. Executive Order 12630—Takings

In accordance with Executive Order 12630, the rule does not have significant takings implications. The rule establishes an Agreement at the request of the State of Indiana and will result in the delegation of authority to the State. A takings implication assessment is not required.

6. Executive Order 12612—Federalism

In accordance with Executive Order 12612, the rule does not have significant Federalism implications to warrant the preparation of a Federalism Assessment. The rule establishes an Agreement at the request of the State of Indiana and will result in the delegation of authority to the State. Therefore, a Federalism assessment is not required.

7. Executive Order 12988—Civil Justice Reform

In accordance with Executive Order 12988, the Office of the Solicitor has

determined that this rule does not unduly burden the judicial system and meets the requirements of sections 3(a) and 3(b)(2) of the Order.

8. Paperwork Reduction Act

This rule does not require an information collection from 10 or more parties and a submission under the Paperwork Reduction Act is not required. An OMB form 83–I is not required.

9. National Environmental Policy Act

An environmental impact statement is not required for this rule since section 702(d) of SMCRA (30 U.S.C. 1292(d)) provides that the implementation of a Federal lands program under the provision of section 523 of SMCRA does not constitute a major Federal action within the meaning of section 102(2)(C) of the National Environmental Policy Act of 1969 (42 U.S.C. 4332(2)(C)).

10. Author

The principal author of this rule is Andrew R. Gilmore, Director, Office of Surface Mining, Indianapolis Field Office, Minton-Capehart Federal Building, 575 N. Pennsylvania Street, Indianapolis, Indiana 46204–1521.

List of Subjects in 30 CFR Part 914

Intergovernmental relations, Surface mining, Underground mining.

Dated: January 20, 1999.

Sylvia V. Baca,

Acting Assistant Secretary, Land and Minerals Management.

For the reasons given in the preamble, OSM proposes to amend 30 CFR part 914 as set forth below:

PART 914—INDIANA

1. The authority citation for part 914 continues to read as follows:

Authority: 30 U.S.C. 1201 *et seq.*

2. Section 914.30 is added to read as follows:

§ 914.30 State-Federal Cooperative Agreement.

State-Federal Cooperative Agreement

The Governor of the State of Indiana (Governor) and the Secretary of the Department of the Interior (Secretary) enter into a Cooperative Agreement (Agreement) to read as follows:

Article I: Introduction, Purposes and Responsibile Agencies

A. *Authority:* This Agreement is authorized by section 523(c) of the Surface Mining Control and Reclamation Act (SMCRA), 30 U.S.C. 1273(c), which allows a State with a permanent regulatory program approved by the Secretary under section 503 of SMCRA, 30 U.S.C. 1253, to elect to enter into an Agreement for the State regulation of surface coal mining and reclamation operations (including surface operations and surface impacts incident to underground mining operations) on Federal lands. This Agreement provides for State regulation of coal exploration operations not subject to 43 CFR Part 3400 and surface coal mining and reclamation operations in Indiana on Federal lands (30 CFR Chapter VII Subchapter D), consistent with SMCRA and State and Federal laws governing such activities and the Indiana State Program (Program).

B. *Purposes:* The purposes of this Agreement are to (a) foster Federal-State cooperation in the regulation of surface coal mining and reclamation operations and coal exploration operations not subject to 43 CFR Part 3400; (b) minimize intergovernmental overlap and duplication; and (c) provide uniform and effective application of the Program on all lands in Indiana in accordance with SMCRA, the Program, and this Agreement.

C. *Responsible Administrative Agencies:* The Natural Resource Commission (NRC) and the Division of Reclamation (DOR) of the Indiana Department of Natural Resources will be responsible for administering this Agreement on behalf of the Governor under the approved Indiana Regulatory Program. The Office of Surface and Mining Reclamation and Enforcement (OSM) will administer this Agreement on behalf of the Secretary.

Article II: Effective Date

After being signed by the Secretary and the Governor, this Agreement will take effect 30 days after publication in the **Federal Register** as a final rule: This Agreement will remain in effect until terminated as provided in Article XI.

Article III: Definitions

The terms and phrases used in this Agreement which are defined in SMCRA, 30 CFR Parts 700, 701 and 740, the Program, including the OSM approved State Act (I.C. 14–34), and the rules and regulations promulgated pursuant to those Acts, will be given the meanings set forth in said definitions. Where there is a conflict between the above referenced State and Federal definitions, the definitions used in the Program will apply.

Article IV: Applicability

In accordance with the Federal lands program, the laws, regulations, terms and conditions of the Program are applicable to Federal lands in Indiana except as otherwise stated in this Agreement, SMCRA, 30 CFR 740.4, 740.11(a) and 745.13, and other applicable laws, Executive Orders, or regulations.

Article V: General Requirements

The Governor and the Secretary affirm that they will comply with all the provisions of this Agreement.

A. *Authority of State Agency:* DOR and NRC have and will continue to have the authority under State law to carry out this Agreement.

B. Funds:

1. Upon application by DOR and subject to appropriations, OSM will provide the State with the funds to defray the costs associated with carrying out its responsibilities under this Agreement as provided in section 705(c) of SMCRA, the grant agreement, and 30 CFR 735.16. Such funds will cover the full cost incurred by DOR and NRC in carrying out these responsibilities, provided that such cost does not exceed the estimated cost the Federal government would have expended on such responsibilities in the absence of this Agreement.

2. OSM's Indianapolis Field Office and OSM's Mid-Continent Region Coordinating Center office will work with DOR to estimate the amount the Federal government would have expended for regulation of Federal lands in Indiana in the absence of this Agreement.

3. OSM and the State will discuss the OSM Federal lands cost estimate. After resolution of any issues, DOR will include the Federal lands cost estimate in the State's annual regulatory grant application submitted to OSM's Indianapolis Field Office.

The State may use the existing year's budget totals, adjusted for inflation and workload considerations in estimated regulatory costs for the following grant year. OSM will notify DOR as soon as possible if such projections are not acceptable.

4. If DOR applies for a grant but sufficient funds have not been appropriated to OSM, OSM and DOR will promptly meet to decide on appropriate measures that will insure that surface coal mining and reclamation operations on Federal lands in Indiana are regulated in accordance with the Program. If agreement cannot be reached, either party may terminate the Agreement in accordance with Article XI of this Agreement.

5. Funds provided to the DOR under this Agreement will be adjusted in accordance with Office of Management and Budget Common Rule for Uniform Administration Requirements for Grants and Cooperative Agreements to State and Local Governments.

C. *Reports and Records:* DOR will make annual reports to OSM containing information with respect to compliance with the terms of this Agreement pursuant to 30 CFR 745.12(d). Upon request, DOR and OSM will exchange information developed under this Agreement, except where prohibited by Federal or State law.

OSM will provide DOR with a copy of any final evaluation report prepared concerning State administration and enforcement of this Agreement. DOR comments on the report will be appended before transmission to the Congress, unless necessary to respond to a request by a date certain, or to other interested parties.

D. *Personnel:* Subject to adequate appropriations and grant awards, the DOR will maintain the necessary personnel to fully implement this Agreement in accordance with the provisions of SMCRA, the Federal lands program, and the Program.

E. *Equipment and Laboratories:* Subject to adequate appropriations and grant awards, the DOR will assure itself access to equipment, laboratories, and facilities with which all inspections, investigations, studies,

tests, and analyses can be performed which are necessary to carry out the requirements of the Agreement.

F. *Permit Application Fees and Civil Penalties:* The amount of the fee accompanying an application for a permit for surface coal mining and reclamation operations on Federal lands in Indiana will be determined in accordance with the approved Indiana Program. All permit fees, civil penalties and fines collected from operations on Federal lands will be retained by the State and will be deposited within the Natural Resources Reclamation Division Fund. Permit fees will be considered program income. Civil penalties and fines will not be considered program income. The financial status report submitted pursuant to 30 CFR 735.26 will include a report of the amount of fees, penalties, and fines collected on such permits during the State's prior fiscal year.

Article VI: Review of Permit Application Package

A. Submission of Permit Application Package

1. DOR and the Secretary require an applicant proposing to conduct surface coal mining and reclamation operations on Federal lands covered by this Agreement to submit a permit application package (PAP) in an appropriate number of copies to DOR. DOR will furnish OSM and other Federal agencies with an appropriate number of copies of the PAP. The PAP will be in the form required by DOR and will include any supplemental information required by OSM, the Federal land management agency, and other agencies with jurisdiction or responsibility over Federal lands affected by the operations proposed in the PAP.

At a minimum, the PAP will satisfy the requirements of 30 CFR 740.13(b) and include the information necessary for DOR to make a determination of compliance with the Program and for OSM and the appropriate Federal agencies to make determinations of compliance with applicable requirements of SMCRA, the Federal lands program, and other Federal laws, Executive Orders, and regulations for which they are responsible.

2. For any outstanding or pending permit applications on Federal lands being processed by OSM prior to the effective date of this Agreement, OSM will maintain sole permit decision responsibility. After the final decision, all additional responsibilities shall pass to DOR pursuant to the terms of this Agreement along with any attendant fees, fines, or civil penalties therefrom.

B. Review Procedures Where There Is No Leased Federal Coal Involved

1. DOR will assume the responsibilities for review of PAPs where there is no leased Federal coal to the extent authorized in 30 CFR 740.4(c)(1), (2), (4), (6) and (7). In addition to consultation with the Federal land management agency pursuant to 30 CFR 740.4(c)(2), DOR will be responsible for obtaining, except for non-significant revisions, the comments and determinations of other Federal agencies with jurisdiction or responsibility over Federal lands affected by the operations proposed in the PAP. DOR will request such Federal agencies to furnish their findings or any requests for additional information to DOR within 45 calendar days of the date of receipt of the PAP. OSM will assist DOR in obtaining this information, upon request.

Responsibilities and decisions which can be delegated to DOR under other applicable Federal laws may be specified in working agreements between OSM and the State, with the concurrence of any Federal agency involved, and without amendment to this Agreement.

2. DOR will assume responsibility for the analysis, review and approval, disapproval, or conditional approval of the permit application component of the PAP required by 30 CFR 740.13 for surface coal mining and reclamation operations in Indiana on Federal lands not requiring a mining plan pursuant to the Mineral Leasing Act (MLA). DOR will review the PAP for compliance with the Program and the OSM approved State Act and regulations. DOR will be the primary point of contact for applicants regarding decisions on the PAP and will be responsible for informing the applicant of determinations.

3. The Secretary will make his determinations under SMCRA that cannot be delegated to the State. Some of which have been delegated to OSM.

4. OSM and DOR will coordinate with each other during the review process as needed. OSM will provide technical assistance to DOR when requested, if available resources allow. DOR will keep OSM informed of findings made during the review process which bear on the responsibilities of OSM or other Federal agencies. OSM may provide assistance to DOR in resolving conflicts with Federal land management agencies. OSM will be responsible for ensuring that any information OSM receives from an applicant is promptly sent to DOR. OSM will have access to DOR files concerning operations on Federal lands. OSM will send to DOR copies of all resulting correspondence between OSM and the applicant that may have a bearing on decisions regarding the PAP. The Secretary reserves the right to act independently of DOR to carry out his responsibilities under laws other than SMCRA.

5. DOR will make a decision on approval, disapproval or conditional approval of the permit on Federal lands.

(a) Any permit issued by DOR will incorporate any lawful terms or conditions imposed by the Federal land management agency, including conditions relating to post-mining land use, and will be conducted in compliance with the requirements of the Federal land management agency.

(b) The permit will include lawful terms and conditions required by other applicable Federal laws and regulations.

(c) After making its decision on the PAP, DOR will send a notice to the applicant, OSM, the Federal land management agency, and any agency with jurisdiction or responsibility over Federal lands affected by the operations proposed in the PAP. A copy of the permit and written findings will be submitted to OSM upon request.

C. Review Procedures Where Leased Federal Coal Is Involved

1. DOR will assume the responsibilities listed in 30 CFR 740.4(c)(1), (2), (3), (4), (6) and (7), to the extent authorized.

In accordance with 30 CFR 740.4(c)(1), DOR will assume responsibility for the analysis, review and approval, disapproval, or conditional approval of the permit application component of the PAP for surface coal mining and reclamation operations in Indiana where a mining plan is required, including applications for revisions, renewals and transfer sale and assignment of such permits. OSM will, at the request of the State, assist to the extent possible in this analysis and review.

DOR will be the primary point of contact for applicants regarding the review of the PAP for compliance with the Program and State law and regulations. DOR will be responsible for informing the applicant of all joint State-Federal determinations.

DOR will to the extent authorized, consult with the Federal land management agency and the Bureau of Land Management (BLM) pursuant to 30 CFR 740.4(c)(2) and (3), respectively. On matters concerned exclusively with regulations under 43 CFR part 3480, Subparts 3480 through 3487, BLM will be the primary contact with the applicant. BLM will inform DOR of its actions and provide DOR with a copy of documentation on all decisions.

DOR will send the OSM copies of any correspondence with the applicant and any information received from the applicant regarding the PAP. OSM will send to DOR copies of all correspondence with the applicant which may have a bearing on the PAP. As a matter of practice, OSM will not independently initiate contacts with applicants regarding completeness or deficiencies of the PAP with respect to matters covered by the Program.

DOR will also be responsible for obtaining the comments and determinations of other Federal agencies with jurisdiction or responsibility over Federal lands affected by the operations proposed in the PAP. DOR will request all Federal agencies to furnish their findings or any requests for additional information to DOR within 45 days of the date of receipt of the PAP. OSM will assist DOR in obtaining this information, upon request of DOR.

DOR will be responsible for approval and release of performance bonds under 30 CFR 740.4(c)(4) in accordance with Article IX of this Agreement, and for review and approval under 30 CFR 740.4(c)(6) of exploration operations not subject to 43 CFR Part 3480, Subparts 3480–3487.

DOR will prepare documentation to comply with the requirements of NEPA under 30 CFR 740.4(c)(7); however, OSM will retain the responsibility for the exceptions in 30 CFR 740.4(c)(7) (i)–(vii).

2. The Secretary will concurrently carry out his responsibilities under 30 CFR 740.4(a) that cannot be delegated to DOR under the Federal lands program, MLA, the National Environmental Policy Act (NEPA), this Agreement, and other applicable Federal laws. The Secretary will carry out these responsibilities in a timely manner and will

avoid to the extent possible, duplication of the responsibilities of the State as set forth in this Agreement and the Program. The Secretary will consider the information in the PAP and, where appropriate, make decisions required by SMCRA, MLA, NEPA, and other Federal laws.

Responsibilities and decisions which can be delegated to the State under other applicable Federal laws may be specified in working agreements between OSM and DOR, with concurrence of any Federal agency involved, and without amendment to this Agreement.

Where necessary to make the determination to recommend that the Secretary approve the mining plan, OSM will consult with and obtain the concurrences of the BLM, the Federal land management agency and other Federal agencies as required.

The Secretary reserves the right to act independently of DOR to carry out his responsibilities under laws other than SMCRA or provisions of SMCRA not covered by the Program, and in instances of disagreement over SMCRA and the Federal lands program.

3. OSM will assist DOR in carrying out DOR's responsibilities by:

(a) Coordinating resolution of conflicts and difficulties between DOR and other Federal agencies in a timely manner.

(b) Assisting in scheduling joint meetings, upon request, between State and Federal agencies.

(c) Where OSM is assisting DOR in reviewing the PAP, furnishing to DOR the work product within 50 calendar days of receipt of the State's request for such assistance, unless a different time is agreed upon by OSM and DOR.

(d) Exercising its responsibilities in a timely manner, governed to the extent possible by the deadlines established in the Program.

4. Review of the PAP:

(a) OSM and DOR will coordinate with each other during the review process as needed. DOR will keep OSM informed of findings and technical analyses made during the review process which bear on the responsibilities of OSM or other Federal agencies. OSM will ensure that any information it receives which has a bearing on decisions regarding the PAP is promptly sent to DOR.

(b) DOR will review the PAP for compliance with the Program and State law and regulations.

(c) OSM will review the operation and reclamation plan portion of the permit application, and any other appropriate portions of the PAP for compliance with the non-delegable responsibilities of SMCRA and for compliance with the requirements of other Federal laws and regulations.

(d) OSM and DOR will develop a work plan and schedule for PAP review and each will identify a person as the project leader. The project leaders will serve as the primary points of contact between OSM and DOR throughout the review process. Not later than 50 days after receipt of the PAP, unless a different time is agreed upon, OSM will furnish DOR with its review comments on the PAP and specify any requirements for additional data. To the extent practicable, DOR will provide OSM all available information that may aid OSM in preparing any findings.

(e) DOR will prepare a State decision package, including written findings and supporting documentation, indicating whether the PAP is in compliance with the Program. The review and finalization of the State decision package will be conducted in accordance with procedures for processing PAPs agreed upon by DOR and OSM.

(f) DOR may make a decision on approval or disapproval of the permit on Federal lands in accordance with the Program prior to the necessary Secretarial decision on the mining plan, provided that DOR advises the operator in the permit that Secretarial approval of the mining plan must be obtained before the operator may conduct coal development or mining operations on the Federal lease. DOR will reserve the right to amend or rescind any requirements of the permit to conform with any terms or conditions imposed by the Secretary in his approval of the mining plan.

(g) The permit will include, as applicable, terms and conditions required by the lease issued pursuant to the MLA and by any other applicable Federal laws and regulations, including conditions imposed by the Federal land management agency relating to post-mining land use, and those of other affected agencies, and will be conditioned on compliance with the requirements of the Federal land management agency with jurisdiction.

(h) After making its decision on the PAP, DOR will send a notice to the applicant, OSM, the Federal land management agency, and any agency with jurisdiction or responsibility over Federal land affected by operations proposed in the PAP. A copy of the written findings and the permit will also be submitted to OSM.

5. OSM will provide technical assistance to DOR when requested, if available resources allow. OSM will have access to DOR files concerning operations on Federal lands.

D. Review Procedures for Permit Revisions; Renewals; and Transfer Assignment or Sate of Permit Rights

1. Any permit revision or renewal for an operation on Federal lands will be reviewed and approved or disapproved by DOR after consultation with OSM on whether such revision or renewal constitutes a mining plan modification pursuant to 30 CFR 746.18. OSM will inform DOR within 30 days of receiving a copy of a proposed revision or renewal, whether the permit revision, or renewal constitutes a mining plan modification. Where approval of a mining plan modification is required, OSM and DOR will follow the procedures outlined in paragraphs C. 1. through C.5. of this Article.

2. OSM may establish criteria consistent with 30 CFR 746.18 to determine which permit revisions and renewals clearly do not constitute mining plan modifications.

3. Permit revisions or renewals on Federal lands which are determined by OSM not to constitute mining plan modifications under paragraph D. 1. of this Article or that meet the criteria for not being mining plan modifications as established under paragraph D.2. of this Article will be reviewed and approved following the procedures set forth under Indiana law and the State Program and paragraphs B.1. through B.5. of this Article.

4. Transfer, assignment or sale of permit rights on Federal lands shall be processed in accordance with Indiana law and the State Program and 30 CFR 740.13(e).

Article VII: Inspections

A. DOR will conduct inspections on Federal lands in accordance with 30 CFR 740.4(c)(5) and prepare and file inspection reports in accordance with the Program.

B. DOR will, subsequent to conducting any inspection pursuant to 30 CFR 740.4(c)(5), and on a timely basis, file with OSM a legible copy of the completed State inspection report.

C. DOR will be the point of contact and primary inspection authority in dealing with the operator concerning operations and compliance with the requirements covered by the Agreement, except as described hereinafter. Nothing in this Agreement will prevent inspections by authorized Federal or State agencies for purposes other than those covered by this Agreement. The Department may conduct any inspections necessary to comply with 30 CFR parts 842 and 843 and its obligations under laws other than SMCRA.

D. OSM will give DOR reasonable notice of its intent to conduct an inspection under 30 CFR 842.11 in order to provide State inspectors with an opportunity to join in the inspection.

When OSM is responding to a citizen complaint of an imminent danger to the public health and safety, or of significant, imminent environmental harm to land, air or water resources, pursuant to 30 CFR 842.11(b)(1)(ii)(C), it will contact DOR no less than 24 hours prior to the Federal inspection, if practicable, to facilitate a joint Federal/State inspection. All citizen complaints which do not involve an imminent danger or significant, imminent environmental harm will be referred to DOR for action. The Secretary reserves the right to conduct inspections without prior notice to DOR to carry out his responsibilities under SMCRA.

Article VIII: Enforcement

A. DOR will have primary enforcement authority under SMCRA concerning compliance with the requirements of the Agreement and the Program in accordance with 30 CFR 740.4(c)(5). Enforcement authority given to the Secretary under other Federal laws and Executive orders including, but not limited to, those listed in Appendix A (attached) is reserved to the Secretary.

B. During any joint inspection by OSM and DOR, DOR will have primary responsibility for enforcement procedures, including issuance of orders of cessation, notices of violation, and assessment of penalties. DOR will inform OSM prior to issuance of any decision to suspend or revoke a permit on Federal lands.

C. During any inspection made solely by OSM or any joint inspection where DOR and OSM fail to agree regarding the propriety of any particular enforcement action, OSM may take any enforcement action necessary to

comply with 30 CFR parts 843, 845, and 846. Such enforcement action will be based on the standards in the Program, SMCRA, or both, and will be taken using the procedures and penalty system contained in 30 CFR parts 843, 845, and 846.

D. DOR and OSM will promptly notify each other of all violations of applicable laws, regulations, orders, or approved mining permits subject to this Agreement, and of all actions taken with respect to such violations.

E. Personnel of DOR and the Department of the Interior, including OSM, will be mutually available to serve as witness in enforcement actions taken by either party.

F. This Agreement does not affect or limit the Secretary's authority to enforce violations of Federal laws other than SMCRA.

Article IX: Bonds

A. DOR and the Secretary will require each operator who conducts operations on Federal lands to submit a performance bond payable to the State of Indiana and the United States to cover the operator's responsibilities under SMCRA and the Program. Such performance bond will be conditioned upon compliance with all requirements of the SMCRA, the Program, State rules and regulations, and any other requirements imposed by the Secretary or the Federal land management agency. Such bond will provide that if this Agreement is terminated, the portion of the bond covering the Federal lands will be payable only to the United States. DOR will advise OSM of annual adjustments to the performance bond pursuant to the Program.

B. Performance bonds will be subject to release and forfeiture in accordance with the procedures and requirements of the Program. Where surface coal mining and reclamation operations are subject to an approved mining plan, a performance bond shall be released by the State after the release is concurred in by OSM.

C. Submission of a performance bond does not satisfy the requirements for a Federal lease bond required by 43 CFR Subpart 3474 or lessee protection bond required in addition to a performance bond, in certain circumstances, by section 715 of SMCRA.

Article X: Designating Land Areas Unsuitable for all or Certain Types of Surface Coal Mining and Reclamation Operations and Activities and Valid Existing Rights (VER) and Compatibility Determinations

A. Unsuitability Petitions

1. Authority to designate Federal lands as unsuitable for mining pursuant to a petition, including the authority to make substantial legal and financial commitment determinations pursuant to section 522(a)(6) of SMCRA, is reserved to the Secretary.

2. When either DOR or OSM receives a petition to designate land areas unsuitable for all or certain types of surface coal mining operations that could impact adjacent Federal or non-Federal lands pursuant to section 522(c) of SMCRA, the agency receiving the petition will notify the other of its receipt and the anticipated schedule for reaching a decision, and request and fully consider data, information and recommendations of the other. OSM will coordinate with the Federal land management agency with jurisdiction over the petition area, and will solicit comments from the agency.

B. Valid Existing Rights and Compatibility Determinations

The following actions will be taken when requests for determinations of VER pursuant to section 522(e) of SMCRA or for determinations of compatibility pursuant to section 522(e)(2) of SMCRA, and received prior to or at the time of submission of a PAP that involves surface coal mining and reclamation operations and activities:

1. For Federal lands within the boundaries of any areas specified under section 522(e)(1) of SMCRA, OSM will determine whether VER exists for such areas.

For private in holdings within section 522(e)(1) areas, DOR, with the consultation and concurrence of OSM, will determine whether surface coal mining operations on such lands will or will not affect the Federal interest (Federal lands as defined in section 701(4) of SMCRA). OSM will process VER determination requests on private in holdings within the boundaries of section 522(e)(1) areas where surface coal mining operations affects the Federal interest.

2. For Federal lands within the boundaries of any national forest where proposed operations are prohibited or limited by section 522(e)(2) of SMCRA and 30 CFR 761.11(b), OSM will make the VER determinations. OSM will process requests for determinations of compatibility under section 522(e)(2) of SMCRA.

3. For Federal lands, DOR will determine whether any proposed operation will adversely affect any publicly owned park and, in consultation with the State Historic Preservation Officer, places listed in the National Register of Historic Sites, with respect to the prohibitions or limitations of section 522(e)(3) of SMCRA. DOR will make the VER determination for such lands using the State Program. DOR will coordinate with any affected agency or agency with jurisdiction over the proposed surface coal mining and reclamation operations.

In the case that VER is determined not to exist under section 522(e)(3) of SMCRA or 30 CFR 761.11(c), no surface coal mining operations will be permitted unless jointly approved by DOR and the Federal, State or local agency with jurisdiction over the publicly owned park or historic place.

4. DOR will process and make determinations of VER on Federal lands, using the State Program, for all areas limited or prohibited by section 522(e)(4) and (5) of SMCRA as unsuitable for mining. For operations on Federal lands, DOR will coordinate with any affected agency or agency with jurisdiction over the proposed surface coal mining and reclamation operation.

Article XI: Termination of Cooperative Agreement

This Agreement may be terminated by the Governor or the Secretary under the provisions of 30 CFR 745.15.

Article XII: Reinstatement of Cooperative Agreement

If this Agreement has been terminated in whole or in part it may be reinstated under the provisions of 30 CFR 745.16.

Article XIII: Amendment of Cooperative Agreement

This Agreement may be amended by mutual agreement of the Governor and the Secretary in accordance with 30 CFR 745.14.

Article XIV: Changes in State or Federal Standards

A. The Secretary or the Governor may from time to time promulgate new or revised performance or reclamation requirements or enforcement and administration procedures. Each party will, if it determines it to be necessary to keep this Agreement in force, change or revise its regulations or request necessary legislative action. Such changes will be made under the procedures of 30 CFR part 732 for changes to the Program and under the procedures of section 501 of SMCRA for changes to the Federal lands program.

B. DOR and the Secretary will provide each other with copies of any changes to their respective laws, rules, regulations or standards pertaining to the enforcement and administration of this Agreement.

Article XV: Changes in Personnel and Organization

Each party to this Agreement will notify the other, when necessary, of any changes in personnel, organization and funding, or other changes that may affect the implementation of this Agreement to ensure coordination of responsibilities and facilitate cooperation.

Article XVI: Reservation of Rights

This Agreement will not be construed as waiving or preventing the assertion of any rights in this Agreement that the state or the Secretary may have under laws other than SMCRA or their regulations including but not limited to those listed in Appendix A.

Bruce Babbitt,

Secretary of the Interior.

Date

Frank O'Bannon,

Governor of Indiana.

Date

Appendix A

1. The Federal Land Policy and Management Act, 43 U.S.C. 1701 *et seq.*, and implementing regulations.

2. The Mineral Leasing Act of 1920, 30 U.S.C. 181 *et seq.*, and implementing regulations, including 43 CFR part 3480.

3. The National Environmental Policy Act of 1969, 42 U.S.C. 4321 *et seq.*, and implementing regulations, including 40 CFR part 1500.

4. The Endangered Species Act, as amended, 16 U.S.C. 1531 *et seq.*, and implementing regulations, including 50 CFR part 402.

5. The Fish and Wildlife Coordination Act, as amended, 16 U.S.C. 661 *et seq.*; 48 Stat. 401.

6. The National Historic Preservation Act of 1966, 16 U.S.C. 470 *et seq.*, and implementing regulations, including 36 CFR part 800.

7. The Clean Air Act, 42 U.S.C. 7401 *et seq.*, and implementing regulations.

8. The Federal Water Pollution Control Act, 33 U.S.C. 1251 *et seq.*, and implementing regulations.

9. The Resource Conservation and Recovery Act of 1976, 42 U.S.C. 6901 *et seq.*, and implementing regulations.

10. The Reservoir Salvage Act of 1960, amended by the Preservation of Historical and Archaeological Data Act of 1974, 16 U.S.C. *et seq.*

11. Executive Order 11593 (May 13, 1971), Cultural Resource Inventories on Federal Lands.

12. Executive Order 11988 (May 24, 1977), for flood plain protection.

13. Executive Order 11990 (May 24, 1977), for wetlands protection.

14. The Mineral Leasing Act for Acquired Lands, 30 U.S.C. 351 *et seq.*, and implementing regulations.

15. The Stock Raising Homestead Act of 1916, 43 U.S.C. 291 *et seq.*

16. The Constitution of the United States.

17. Surface Mining Control and Reclamation Act of 1977, 30 U.S.C. 1201 *et seq.*

18. 30 CFR Chapter VII.

19. The Constitution of the State of Indiana.

20. Indiana Surface Coal Mining and Reclamation Act (P.L. 1—1995, SEC. 27) at Ind. Code 14–34 *et seq.*

21. Indiana Department of Natural Resources, Coal Mining and Reclamation Operations, Rules and Regulations, 310 Ind. Admin. Code 12.

[FR Doc. 99–2911 Filed 2–5–99; 8:45 am]

BILLING CODE 4310–05–P

federal register

Monday
February 8, 1999

Part IV

Department of Transportation

Federal Aviation Administration

14 CFR Part 25

Revision of Gate Requirements for High-Lift Device Controls; Final Rule

DEPARTMENT OF TRANSPORTATION

Federal Aviation Administration

14 CFR Part 25

[Docket No. 28930; Amdt. No. 25–98]

RIN 2120–AF82

Revision of Gate Requirements for High-Lift Device Controls

AGENCY: Federal Aviation Administration, DOT.

ACTION: Final rule.

SUMMARY: This action amends the airworthiness standards for transport category airplanes to revise the requirements concerning gated positions on the control used by the pilot to select the position of an airplane's high-lift devices. The FAA is taking this action to update the current standards to take into account the multiple configurations of the high-lift devices provided on current airplanes to perform landings and go-around maneuvers. This final rule also harmonizes these standards with those being adopted by the European Joint Aviation Authorities (JAA).

EFFECTIVE DATE: March 10, 1999.

FOR FURTHER INFORMATION CONTACT: Don Stimson, FAA, Airplane and Flight Crew Interface Branch, ANM–111, Transport Airplane Directorate, Aircraft Certification Service, 1601 Lind Avenue SW., Renton, WA 98055–4056; telephone (425) 227–1129; facsimile (425) 227–1320, e-mail Don.Stimson@faa.gov.

SUPPLEMENTARY INFORMATION:

Availability of Final Rule

An electronic copy of this document may be downloaded using a modem and suitable communications software from the FAA regulations section of the FedWorld electronic bulletin aboard service (telephone: 703–321–3339), the Government Printing Office's electronic bulletin board service (telephone: 202–512–1661), or the FAA's Aviation Rulemaking Advisory Committee Bulletin Board service (telephone: 800–322–2722 or 202–267–5948).

Internet users may reach the FAA's web page at http://www.faa.gov/avr/arm/nprm/nprm.htm or the Government Printing Office's web page at http://www.access.gpo.gov/nara for access to recently published rulemaking documents.

Any person may obtain a copy of this document by submitting a request to the Federal Aviation Administration, Office of Rulemaking, ARM–1, 800 Independence Avenue, SW., Washington, DC 20591, or by calling (202) 267–9680. Communications must reference the amendment number or docket number of this final rule.

Persons interested in being placed on the mailing list for future notices of proposed rulemaking and final rules should request from the above office a copy of Advisory Circular (AC) No. 11–2A, Notice of Proposed Rulemaking Distribution System, which describes the application procedure.

Small Entity Inquiries

The Small Business Regulatory Enforcement Fairness Act of 1996 (SBREFA) requires the FAA to report inquiries from small entities concerning information on, and advice about, compliance with statutes and regulations within the FAA's jurisdiction, including interpretation and application of the law to specific sets of facts supplied by a small entity.

The FAA's definitions of small entities may be accessed through the FAA's web page (http://www.faa.gov/avr/arm/sbrefa.htm), by contacting a local FAA official or by contacting the FAA's Small Entity Contact listed below.

If you are a small entity and have a question, contact your local FAA official. If you do not know how to contact your local FAA official, you may contact Charlene Brown, Program Analyst Staff, Office of Rulemaking, ARM–27, Federal Aviation Administration, 800 Independence Avenue, SW., Washington, DC 20591, 1–888–551–1594. Internet users can find additional information on SBREFA in the ''Quick Jump'' section of the FAA's web page at http://www.faa.gov/avr/arm/sbrefa.htm and may send electronic inquiries to the following Internet address: 9–AWA–SBREFA@faa.gov.

Background

Section 25.145(c) of 14 CFR part 25 of the Federal Aviation Regulations prescribes conditions under which it must be possible for the pilot, without using exceptional piloting skill, to prevent losing altitude while retracting the airplane's high-lift devices (e.g., wing flaps and slats). The intent of this requirement is to ensure that during a go-around from an approach to landing, the high-lift devices can be retracted at a rate that prevents altitude loss if the pilot applies maximum available power to the engines at the same time the control lever is moved to begin retracting the high-lift devices.

Prior to Amendment 25–23 to part 25, the § 25.145(c) requirement applied to retractions of the high-lift devices from any initial position to any ending position, including a continuous retraction from the fully extended position to the fully retracted position. In Amendment 25–23 to part 25, the FAA revised this requirement to allow the use of segmented retractions if gates are provided on the control the pilot uses to select the high-lift device position.

Gates are devices that require a separate and distinct motion of the control before the control can be moved through a gated position. The purpose of the gates is to prevent pilots from inadvertently moving the high-lift device control through the gated position. Gate design requirements were introduced into part 25 with Amendment 25–23, which revised § 25.145(c) to allow the no altitude loss requirement to be met by segmented retractions of the high-lift devices between gated positions of the high lift devices. As amended by Amendment 25–23, § 25.145(c) specifies that the no altitude loss requirement applies to retractions of the high-lift devices between the gated positions and between the gates and the fully extended and fully retracted positions. In addition, the first gated control position from the landing position must correspond to the position used to establish the go-around procedure from the landing configuration.

In Notice of Proposed Rulemaking 97–9, which was published in the **Federal Register** on June 9, 1997 (62 FR 31482), the FAA proposed to update the gate design standards to clarify which positions of the high-lift device control should be gated and to harmonize these standards with those being proposed for the European Joint Airworthiness Requirements (JAR–25). The proposal contained in Notice 97–9 was originally developed by the Aviation Rulemaking Advisory Committee (ARAC) and presented to the FAA as a recommendation for rulemaking.

The Aviation Rulemaking Advisory Committee

The ARAC was formally established by the FAA on January 22, 1991 (56 FR 2190), to provide advice and recommendations concerning the full range of the FAA's safety-related rulemaking activity. This advice was sought to develop better rules in less overall time using fewer FAA resources than are currently needed. The committee provides the opportunity for the FAA to obtain firsthand information and insight from interested parties regarding proposed new rules or revisions of existing rules.

There are over 60 member organizations on the committee,

representing a wide range of interests within the aviation community. Meetings of the committee are open to the public, except as authorized by section 10(d) of the Federal Advisory Committee Act.

The ARAC establishes working groups to develop proposals to recommend to the FAA for resolving specific issues. Tasks assigned to working groups are published in the **Federal Register**. Although working group meetings are not generally open to the public, all interested parties are invited to participate as working group members. Working groups report directly to the ARAC, and the ARAC must concur with a working group proposal before that proposal can be presented to the FAA as an advisory committee recommendation.

The activities of the ARAC will not, however, circumvent the public rulemaking procedures. After an ARAC recommendation is received and found acceptable by the FAA, the agency proceeds with the normal public rulemaking procedures. Any ARAC participation in a rulemaking package will be fully disclosed in the public docket.

Discussion of the Proposals

In Notice 97–9, the FAA proposed to update the gate design standards to clarify which positions of the high-lift device control should be gated and to harmonize these standards with those being proposed for the European Joint Airworthiness Requirements. First, the FAA proposed to re-codify the gate requirements of § 25.145(c) as a new § 25.145(d). Second, the FAA proposed to update and clarify the requirement that the first gated control position from the landing position corresponds to the configuration used to execute a go-around from an approach to landing. Third, the FAA proposed to clarify that performing a go-around maneuver beginning from any approved landing configuration should not result in a loss of altitude, regardless of the location of gated control positions. Fourth, the FAA proposed to add a statement to clarify that the ''separate and distinct motion'' required to move the high-lift device control through a gated position must be made at that gated position.

The existing gate requirements are contained in a separate, but undesignated paragraph at the end of § 25.145(c). To be consistent with current codification practices, the FAA proposed to re-codify these requirements as a new § 25.145(d). Re-codification would not affect the content or intent of the requirement.

Currently, § 24.145(c) requires the first gated control position from the landing position to ''correspond with the high-lift devices configuration used to establish the go-around procedure from the landing configuration.'' The wording of this requirement implies that airplanes have only one configuration that can be used for landing and one configuration that can be used to perform a go-around maneuver. Modern transport category airplanes, however, typically have multiple configurations that can be used for performing a landing or a go-around. Airplane manufacturers provide multiple landing and go-around configurations to optimize airplane performance for different environmental conditions (e.g., field elevation and temperature) and for non-normal situations (e.g., inoperative engines or systems).

To provide for airplanes with multiple landing and go-around configurations, the FAA proposed to revise the portion of the gate requirements relating to the placement of the first gated control position from the landing position by inserting the word ''maximum'' preceding ''landing position'' and by replacing ''the high-lift devices configuration'' and the go-around procedure'' with ''a configuration of the high-lift devices'' and ''a go-around procedure,'' respectively. The FAA considered allowing the location of the flap gates to be made independent of the go-around position; however, from a human factors standpoint, providing a gate at a go-around position assists the pilot in selecting the proper configuration for a maneuver that is usually unexpected and entails a high workload. The FAA considers that requiring a gate at every approved go-around position would also be undesirable. Too many gates would make it difficult for the pilot to move the control through high-lift device positions that might not be used during normal operations. For go-around maneuvers using a different high-lift device position than the position that is gated, the gate can still serve as a guide for selecting the proper configuration (e.g., the pilot could move the control to the gate and either forward or backward one or more positions).

The FAA also proposed a revision to Advisory Circular (AC) 25–7, ''Flight Test Guide for Certification of Transport Category Airplanes'' (June 17, 1997, 62 FR 32852) to provide additional guidance regarding criteria for locating the gate when the airplane has multiple go-around configurations.

Regardless of the location of any gates, initiating a go-around from any of the approved landing configurations should not result in a loss of altitude. Therefore, the FAA proposed to further revise the existing gate standards to require applicants to demonstrate that no less altitude will result from retracting the high-lift devices from each approved landing position to the position(s) corresponding with the high-lift device configuration(s) used to establish the go-around procedure(s) from that landing configuration.

The existing § 25.145(c) also requires that a separate and distinct movement of the high-lift device control must be made to pass through a gated position. The FAA proposed to further clarify the gate design criteria in the proposed § 25.145(d) to specify that this separate and distinct movement can occur only at the gated position. This provision would ensure that the pilot receives tactile feedback when the control reaches a gated position. Although the FAA has always interpreted the current requirements in a manner consistent with this provision, this proposal will assist applicants by clarifying the part 25 design requirements for gated high-lift device control positions.

The amendments proposed in Notice 97–9 were harmonized with proposed amendments to JAR–25. The Joint Aviation Authorities published Notice of Proposed Amendment (NPA) 25B–238 on June 20, 1997, which, in combination with the proposed part 25 changes, would achieve complete harmonization of the affected positions of part 25 and JAR–25.

Discussion of Comments

Very few comments were received on the part 25 rule changes proposed by the FAA in Notice 97–9. Three of the commenters, which were organizations represented in the ARAC process that developed these proposals, expressed their support for the proposals. One of these commenters noted that the ARAC process was highly successful in developing a better proposal than what was envisaged at the beginning of the process, did so in a very short period of time, and ended up with a proposal that was unanimously supported by all the participants. This commenter expressed hope that the FAA will continue to make improvements in the process to develop rules in less overall time.

One commenter, whose organization was also represented in the ARAC deliberations, expressed support for the proposals, but also suggested several changes be made. First, the commenter notes that § 25.145 uses both terms ''wing flaps'' and ''high lift devices.'' The commenter suggests standardizing on the single term ''high lift devices'' throughout.

Second, the commenter alleges that the FAA proposal differs from the JAA proposal relative to the position of the first gated position from the maximum landing position. The commenter claims that the FAA proposal would require the gate to correspond with the configuration used to establish a go-around procedure from ''the'' landing position, implying that the landing position is the maximum position. The commenter notes that the JAA proposal refers to ''a'' landing position, which the commenter believes allows the optimum gate position to be chosen when there are multiple landing configurations.

Third, the commenter notes that there is no reference within part 25 regarding the relationship between the configuration for the missed approach (§§ 25.101(g) and 25.121(d)) and the configuration used for go-around (proposed § 25.145(d)). Since these configurations can be different, the commenter believes that the definitions and procedures should be clarified. The commenter did not fully explain why such clarification is needed, nor were any specific suggestions provided.

Last, the commenter notes that there could be a landing flap position at a lesser flap angle than the gated go-around position. Under the proposed rules, there would not be a requirement to have any gates between that position and the clean configuration. This could lead to an inadvertent retraction of the high lift leading edge devices (e.g., slats) during a go-around, which the commenter believes may be a hazardous event even if the ''don't sink'' requirement is met.

Although the FAA agrees in principle with the commenter's first suggestion, to standardize on a single term, this issue is outside the scope of the proposed rulemaking. The terms ''flaps,'' ''wing flaps,'' and ''high lift devices'' are used in other part 25 sections in addition to § 25.145, and any attempt to standardize these terms should include a thorough review of these other sections. The objective of this rulemaking is to clarify and harmonize the requirements regarding gates on the high lift device control, taking into account current airplane designs.

Regarding the commenter's second suggestion, the commenter is incorrect in stating that the FAA and JAA proposals are different. The FAA and JAA proposals are exactly the same; they both contain the wording that the commenter prefers. In fact, it is the existing § 25.145(c) and JAR 25.145 that contain the wording the commenter is objecting to, which the FAA and JAA proposed to revise due to the issue raised by the commenter.

The commenter is correct in stating that there is no reference within part 25 regarding the relationship between the configuration for the missed approach (used to comply with §§ 25.101(g) and 25.121(d)) and the configuration used for go-around (used to comply with § 25.145(d)). Although a single configuration is typically specified by the applicant for both situations, the commenter points out that this is not a part 25 requirement. The FAA disagrees that further clarification of the definitions and procedures associated with the missed approach and go-around configurations is necessary. The configuration associated with a missed approach is specifically defined in § 25.121(d), which refers to an approach configuration prior to selection of the landing configuration. The go-around configuration, which is used to show compliance with § 25.145(d), is the climb configuration referenced in the procedures for a balked landing from the landing configuration. The references to and relationships between these configurations have not been changed by this rulemaking.

The issue brought up by the commenter's last suggestion was considered during the development of the proposed rule. However, a specific requirement to place a gate at the position preceding the one at which the wing's leading edge high lift devices (e.g., slats) retract was considered to be too prescriptive. The performance effect of retracting the wing's leading edge high lift devices can vary significantly, depending on the design of the high lift system on the particular airplane. Other than the ''no loss of altitude'' provision of § 25.145(c), it is difficult to quantify a minimum performance requirement that would appropriately address any safety concerns with an inadvertent leading edge device retraction. The FAA considers the ''no loss of altitude'' criterion, coupled with industry design practice, to adequately address this issue.

A commenter who was not involved in the ARAC process leading to the proposed amendment suggests that a gate should be required at all approved go-around positions of the high lift devices, rather than at ''a'' go-around position. This commenter believes that from a human factors standpoint the benefits of maintaining a consistent procedure for selecting the go-around configuration outweigh any drawbacks associated with having too many gates.

The FAA addressed this issue in the preamble of the proposed amendment (which is repeated in the background discussion above). The FAA considers that requiring a gate at every approved go-around position would be undesirable. Too many gates would make it difficult for the pilot to move the control through high-lift device positions that might not be used during normal operations. For go-around maneuvers using a different high-lift device position than the position that is gated, the gate can still serve as a guide for selecting the proper configuration (e.g., the pilot could move the control to the gate and either forward or backward one or more positions).

Although the FAA generally agrees that from a human factors standpoint a consistent operational procedure is desirable, this objective would not necessarily be achieved even if the commenter's suggestion were adopted. For a typical transport category airplane with multiple go-around positions requiring multiple gates, the procedure for selecting the desired go-around configuration may involve moving the selector to the first gate, through a gate to another gate, or through multiple gates to the gate corresponding to the desired configuration. Such a procedure is roughly equivalent to moving the control to the gate and either forward or backward one or more positions to select the desired configuration. The FAA does not consider the presence of multiple gates to provide enough of an enhancement to the flightcrew's ability in selecting the proper configuration to outweigh the potential drawbacks associated with the need to negotiate the control through multiple gates during normal operations.

In light of the foregoing discussion, the amendment is adopted as proposed.

Final Regulatory Evaluation, Initial Regulatory Flexibility Determination, and Trade Impact Assessment

Changes to Federal regulations must undergo several economic analyses. First, Executive Order 12866 directs that each Federal agency shall propose or adopt a regulation only upon a reasoned determination that the benefits of the intended regulation justify its costs. Second, the Regulatory Flexibility Act of 1980 requires agencies to analyze the economic impact of regulatory changes on small entities. Third, the Office of Management and Budget directs agencies to assess the effects of regulatory changes on international trade. And fourth, the Unfunded Mandates Reform Act of 1995 (Pub. L. 104–4) requires agencies to prepare a written assessment of the costs, benefits, and other effects of proposed or final rules that include a Federal mandate likely to result in the expenditure by State, local, or tribal governments, in the aggregate, or by the private sector, of

$100 million or more annually (adjusted for inflation). In conducting these analyses, the FAA has determined that this rule: (1) will generate benefits that justify its costs and is not a ''significant regulatory action'' as defined in the Executive Order; (2) is not ''significant'' as defined in DOT's Regulatory Policies and Procedures; (3) will not have a significant impact on a substantial number of small entities; (4) will lessen restraints on international trade; and (5) does not contain a significant intergovernmental or private sector mandate. These analyses, available in the docket, are summarized below.

Regulatory Evaluation Summary

U.S. manufacturers currently design high-lift device controls in compliance with the final rule. Industry representatives indicate that U.S. manufacturers will not have to redesign high-lift device controls on either newly certificated airplanes or derivatives of currently certificated models. The costs of the rule, therefore, will be negligible. The FAA solicited information from manufacturers of transport category airplanes concerning any possible design changes and associated costs that would result from the proposed amendment. No comments were received concerning these matters.

The primary benefit of the rule is the clarification of gate design standards of high-lift device controls. A second benefit is the harmonization of FAR certification requirements for controls of high-lift devices with JAR certification requirements, and this benefit may result in cost savings to manufacturers of transport category airplanes in the United States and in JAA countries. Although the FAA is unable to quantify these benefits, the FAA has determined that these benefits exceed the negligible costs of the final rule.

Regulatory Flexibility Determination

The Regulatory Flexibility Act of 1980 (RFA) establishes ''as a principle of regulatory issuance that agencies shall endeavor, consistent with the objective of the rule and of applicable statutes, to fit regulatory and informational requirements to the scale of the business, organizations, and governmental jurisdictions subject to regulation.'' To achieve that principle, the Act requires agencies to solicit and consider flexible regulatory proposals and to explain the rationale for their actions. The Act covers a wide-range of small entities, including small businesses, not-for-profit organizations, and small governmental jurisdictions.

Agencies must perform a review to determine whether a proposal or final rule will have a significant economic impact on a substantial number of small entities. If the determination is that it will, the agency must prepare a regulatory flexibility analysis as described in the Act.

However, if an agency determines that a proposed or final rule is not expected to have a significant economic impact on a substantial number of small entities, section 605(b) of the 1980 act provides that the head of the agency may so certify and a regulatory flexibility analysis is not required. The certification must include a statement providing the factual basis for this determination, and the reasoning should be clear. For manufacturers, a small entity is one with 1,500 or fewer employees. No transport category airplane manufacturer has 1,500 or fewer employees, thus there are no affected small entities. In addition, the rule has negligible costs. Consequently, the FAA certifies that the rule will not have a significant economic impact on a substantial number of small transport category airplane manufacturers.

International Trade Impact Assessment

Consistent with the Administration's belief in the general superiority, desirability, and efficacy of free trade, it is the policy of the Administrator to remove or diminish, to the extent feasible, barriers to international trade, including both barriers affecting the export of American goods and services to foreign countries, and those affecting the import of foreign goods and services into the United States.

In accordance with that policy, the FAA is committed to develop, as much as possible, its aviation standards and practices in harmony with its trading partners. Significant cost savings can result from this, both to American companies doing business in foreign markets, and foreign companies doing business in the United States.

This rule is a direct action to respond to this policy by increasing the harmonization of the U.S. Federal Aviation Regulations with the European Joint Aviation Requirements. The result will be a positive step toward removing impediments to international trade.

Unfunded Mandates Reform Act

Title II of the Unfunded Mandates Reform Act of 1995 (the Act), enacted as Pub. L. 104–4 on March 22, 1995, requires each Federal agency, to the extent permitted by law, to prepare a written assessment of the effects of any Federal mandate in a proposed or final agency rule that may result in the expenditure by State, local, and tribal governments, in the aggregate, or by the private sector, of $100 million or more (adjusted annually for inflation) in any one year. Section 204(a) of the Act, 2 U.S.C. 1534(a), requires the Federal agency to develop an effective process to permit timely input by elected officers (or their designees) of State, local, and tribal governments on a proposed ''significant intergovernmental mandate.'' A ''significant intergovernmental mandate'' under the Act is any provision in a Federal agency regulation that will impose an enforceable duty upon State, local, and tribal governments, in the aggregate, of $100 million (adjusted annually for inflation) in any one year. Section 203 of the Act, 2 U.S.C. 1533, which supplements section 204(a), provides that before establishing any regulatory requirements that might significantly or uniquely affect small governments, the agency shall have developed a plan that, among other things, provides for notice to potentially affected small governments, if any, and for a meaningful and timely opportunity to provide input in the development of regulatory proposals.

The rule does not contain any Federal intergovernmental or private sector mandate. Therefore, the requirements of Title II of the Unfunded Mandates Reform Act of 1995 do not apply.

Federalism Implications

The regulations adopted herein will not have substantial direct effects on the States, on the relationship between the national government and the States, or the distribution of power and responsibilities among the various levels of government. Therefore, in accordance with Executive Order 12612, it is determined that this rule will not have sufficient federalism implications to warrant the preparation of a Federalism Assessment.

International Compatibility

In keeping with U.S. obligations under the Convention on International Civil Aviation, it is FAA policy to comply with ICAO Standards and Recommended Practices to the maximum extent practicable. The FAA has determined that this rule does not conflict with any international agreement of the United States.

Regulations Affecting Intrastate Aviation in Alaska

Section 1205 of the FAA Reauthorization Act of 1996 (110 Stat. 3213) requires the Administrator, when modifying regulations in Title 14 of the CFR in a manner affecting intrastate aviation in Alaska, to consider the extent to which Alaska is not served by

transportation modes other than aviation, and to establish such regulatory distinctions as he or she considers appropriate. Because this final rule applies to the certification of future designs of transport category airplanes and their subsequent operation, it could affect intrastate aviation in Alaska. The Administrator has considered the extent to which Alaska is not served by transportation modes other than aviation, and how the final rule could have been applied differently to intrastate operations in Alaska. However, the Administrator has determined that airplanes operated solely in Alaska would present the same safety concerns as all other affected airplanes; therefore, it would be inappropriate to establish a regulatory distinction for the intrastate operation of affected airplanes in Alaska.

List of Subjects in 14 CFR Part 25

Aircraft, Aviation safety, Reporting and recordkeeping requirements.

The Amendment

In consideration of the foregoing, the Federal Administration (FAA) amends part 25 of Title 14, Code of Federal Regulations (14 CFR part 25) as follows:

PART 25—AIRWORTHINESS STANDARDS—TRANSPORT CATEGORY AIRPLANES

1. The authority citation for part 25 continues to read as follows:

Authority: 49 U.S.C. 106(g), 40113, 44701–44702, 44704.

2. Section 25.145 is amended by revising paragraph (c) introductory text, revising the text following paragraph (c)(3), and designating the text as paragraph (d) to read as follows:

§ 25.145 Longitudinal control.

* * * * *

(c) It must be possible, without exceptional piloting skill, to prevent loss of altitude when complete retraction of the high-lift devices from any position is begun during steady, straight, level flight at 1.1 V_{S1} for propeller powered airplanes, or 1.2V_{S1} for turbojet powered airplanes, with—

(1) * * *

(2) * * *

(3) * * *

(d) if gated high-lift device control positions are provided, paragraph (c) of this section applies to retractions of the high-lift devices from any position from the maximum landing position to the first gated position, between gated positions, and from the last gated position to the fully retracted position. The requirements of paragraph (c) of this section also apply to retractions from each approved landing position to the control position(s) associated with the high-lift device configuration(s) used to establish the go-around procedure(s) from that landing position. In addition, the first gated control position from the maximum landing position must correspond with a configuration of the high-lift devices used to establish a go-around procedure from a landing configuration. Each gated control position must require a separate and distinct motion of the control to pass through the gated position and must have features to prevent inadvertent movement of the control through the gated position. It must only be possible to make this separate and distinct motion once the control has reached the gated position.

Issued in Washington, DC, on February 3, 1999.

Jane F. Garvey,

Administrator.

[FR Doc. 99–2971 Filed 2–5–99; 8:45 am]

BILLING CODE 4910–13–M

federal register

Monday
February 8, 1999

Part V

Department of Transportation

Federal Transit Administration

Over-the-Road Bus Accessibility Program Grants; Notice

DEPARTMENT OF TRANSPORTATION

Federal Transit Administration

Over-the-Road Bus Accessibility Program Grants

AGENCY: Federal Transit Administration (FTA), DOT.

ACTION: Notice of availability of funds; solicitation of grant applications.

SUMMARY: The U.S. Department of Transportation (DOT) Federal Transit Administration (FTA) announces the availability of funds for the Over-the-road Bus (OTRB) Accessibility Program, authorized by Section 3038 of the Transportation Equity Act for the 21st Century (TEA–21). The OTRB Accessibility Program makes funds available to private operators of over-the-road buses to finance the incremental capital and training costs of complying with DOT's over-the-road bus accessibility final rule, published in a **Federal Register** Notice on September 24, 1998. The OTRB Accessibility Program calls for national solicitation of applications, with grantees to be selected on a competitive basis. Federal funds are available for up to 50 percent of the project cost.

A total of $24.3 million is available for the program over the life of TEA–21. The guaranteed level of funding available for intercity fixed-route service is $2 million in fiscal year (FY) 1999 and FY 2000, $3 million in FY 2001, and $5.3 million in FY 2002 and FY 2003, for a total of $17.5 million. The guaranteed level of funding for other over-the-road bus services, including charter and tour bus, is $1.7 million per year from FY 2000 to FY 2003, for a total of $6.8 million.

For FY 1999, $2 million was appropriated for intercity fixed-route service providers.

This announcement describes application procedures for the OTRB Accessibility Program and the procedures FTA will use to determine which projects it will fund. It includes all of the information needed to apply for an OTRB Accessibility Program grant.

This announcement is available on the Internet on the FTA website at *http://www.fta.dot.gov/library/legal/otrbap.htm*. This website will also have commonly asked questions and answers. FTA will announce final project selections on the website and in the **Federal Register**.

DATES: Complete applications for OTRB Accessibility Program grants must be submitted to the appropriate FTA regional office (see Appendix A) by the close of business April 16, 1999. The appropriate FTA regional office is that office which serves the state in which an applicant's headquarters office is located. FTA will announce grant selections in June 1999, and we expect that grants will be made by September 30, 1999, the end of the Federal fiscal year. Applicants should not incur costs prior to grant approval by FTA. FTA will accept comments on this notice until March 10, 1999. Based on input, FTA may provide amending or clarifying program information.

ADDRESSES: Comments and questions related to this notice can be made at FTA's website, *http://www.fta.dot.gov/library/legal/otrbap.htm*, or can be mailed or faxed to the following address: Sue Masselink, Federal Transit Administration, Room 9315, 400 7th Street, S.W., Washington, D.C. 20590 (FAX (202) 366–7951).

FOR FURTHER INFORMATION: Contact the appropriate FTA Regional Administrator (Appendix A) for application-specific information and issues. For general program information, contact Sue Masselink, Office of Program Management, (202) 366–2053, e-mail: **sue.masselink@fta.dot.gov.** A TDD is available at 1–800–877–8339 (TDD/FIRS).

SUPPLEMENTARY INFORMATION

Table of Contents

I. General Program Information
II. Guidelines for Preparing Grant Applications
III. Submission of Applications
Appendix A. FTA Regional Offices
Appendix B. Sample Project Budget
Appendix C. Certifications and Assurances
Appendix D. Application Checklist
Appendix E. OMB Standard Form 424, ''Federal Assistance''

I. General Program Information

A. Authority

The program is authorized under Section 3038 of the Transportation Equity Act for the 21st Century (TEA–21). Funds have been appropriated for this program under the Omnibus Consolidated and Emergency Supplemental Appropriations Act, Fiscal Year 1999, which includes Appropriations for Department of Transportation and Related Agencies.

B. Background

Over-the-road buses are used predominantly in intercity service as well as charter and tour bus services. These services are an important element of the U.S. transportation system. TEA–21 authorizes FTA's new Over-the-road Bus Accessibility Program to assist over-the-road bus operators in complying with the Department's Over-the-road Bus Accessibility rule, ''Transportation for Individuals with Disabilities'' (49 CFR Part 37) published in a **Federal Register** notice on September 24, 1998.

Summary of DOT's Over-the-Road Bus Accessibility Rule

Under the over-the-road bus accessibility rule, all new buses obtained by large (Class I carriers, i.e., those with gross annual operating revenues of $5.3 million or more), fixed-route carriers, starting in 2000, must be accessible, with wheelchair lifts and tie-downs that allow passengers to ride in their own wheelchairs. The rule requires the fixed-route carriers' fleets to be completely accessible by 2012. The buses acquired by small (gross operating revenues of less than $5.3 million annually) fixed-route providers also are required to be lift-equipped, although they do not have a deadline for total fleet accessibility. Small providers also can provide equivalent service in lieu of obtaining accessible buses. Starting in 2001, charter and tour companies will have to provide service in an accessible bus on 48 hours' advance notice. Fixed-route companies must also provide this kind of service on an interim basis until their fleets are completely accessible.

Small carriers who provide mostly charter or tour service and also provide a small amount of fixed-route service can meet all requirements through 48-hour advance-reservation service.

Small carriers have an extra year to begin complying with the requirements that apply to them starting in October 2001, compared to October 2000 for large carriers.

Specifications describing the design features that an over-the-road bus must have to be readily accessible to and usable by persons who use wheelchairs or other mobility aids required by the ''Americans with Disabilities Act Accessibility Guidelines for Transportation Vehicles: Over-the-Road Buses'' rule (36 CFR Part 1192) were published in another **Federal Register** Notice on September 28, 1998.

C. Scope

Improving mobility and shaping America's future by ensuring that the transportation system is accessible, integrated, efficient and offers flexibility of choices is a key strategic goal of the Department of Transportation. Over-the-road Bus Accessibility projects will improve mobility for individuals with disabilities by providing financial assistance to help make vehicles accessible and provide training to ensure that drivers and others understand how to use accessibility

features as well as how to treat patrons with disabilities.

D. Eligible Applicants

Grants will be made directly to operators of over-the-road buses. Only intercity, fixed-route over-the-road bus service providers may apply for OTRB Accessibility program funds in fiscal year 1999. Thereafter, other over-the-road bus service providers, including operators of local fixed-route service, commuter service, and charter or tour service may apply for funds appropriated for these providers. Private for-profit operators of over-the-road buses are eligible to be direct applicants for this program. This is a departure from the other FTA programs in which the direct applicant must be a state or local public body.

E. Vehicle and Service Definitions

An ''over-the-road bus'' is a bus characterized by an elevated passenger deck located over a baggage compartment.

Intercity, fixed-route over-the-road bus service is regularly scheduled bus service for the general public, using an over-the-road bus that: operates with limited stops over fixed routes connecting two or more urban areas not in close proximity or connecting one or more rural communities with an urban area not in close proximity; has the capacity for transporting baggage carried by passengers; and makes meaningful connections with scheduled intercity bus service to more distant points.

Other over-the-road bus service means any other transportation using over-the-road buses, including local fixed-route service, commuter service, and charter or tour service (including tour or excursion service that includes features in addition to bus transportation such as means, lodging, admission to points of interest or special attractions).

F. Eligible Projects

Projects to finance the incremental capital and training costs of complying with DOT's over-the-road bus accessibility rule (49 CFR Part 37) are eligible for funding. Capital projects eligible for funding include adding lifts and other accessibility components to new vehicle purchases, and purchasing lifts to retrofit existing vehicles.

Eligible training costs are those required by the final accessibility rule as described in 49 CFR 37.209. These activities were required under the interim OTRB accessibility rule and include training in proper operation and maintenance of accessibility features and equipment, boarding assistance, securement of mobility aids, sensitive and appropriate interaction with passengers with disabilities, and handling and storage of mobility devices. The costs associated with developing training materials or providing training for local providers of over-the-road bus services for these purposes are eligible expenses.

FTA has sponsored the development of accessibility training materials for public transit operators. FTA-funded Project Action is a national technical assistance program to promote cooperation between the disability community and transportation industry. Project Action provides training, resources and technical assistance to thousands of disability organizations, consumers with disabilities, and transportation operators. It maintains a resource center with the most up-to-date information on transportation accessibility. Project Action may be contacted at: Project Action, 700 Thirteenth Street, N.W., Suite 200, Washington, DC 20590, Phone: 1–800–659–6428, Internet address: *http://www.projectaction.org/*.

G. Grant Criteria

FTA will award grants based on:

a. The identified need for over-the-road bus accessibility for persons with disabilities in the areas served by the applicant;

b. The extent to which the applicant demonstrates innovative strategies and financial commitment to providing access to over-the-road buses to persons with disabilities;

c. The extent to which the over-the-road bus operator requires equipment required by DOT's over-the-road bus accessibility rule prior to the required timeframe in the rule;

d. The extent to which financing the costs of complying with DOT's rule presents a financial hardship for the applicant; and

e. The impact of accessibility requirements on the continuation of over-the-road bus service, with particular consideration of the impact of the requirements on service to rural areas and for low-income individuals.

H. Funding Availability

TEA–21 authorizes the OTRB Accessibility program for intercity fixed-route service at a guaranteed level of $2 million in FY 1999 and FY 2000, $3 million in FY 2001, and $5.3 million in FY 2002 and FY 2003. The guaranteed level of funding for other over-the-road bus services is $1.7 million per year from FY 2000 through FY 2003. FTA funds are available for up to 50 percent of the cost of a project. There is no restriction on how much of each year's apportionment can be used for either capital or training projects.

For FY 1999, $2 million has been appropriated for the intercity fixed-route service providers.

I. Grant Requirements

The grant application must include documentation necessary to meet the requirements of FTA's Nonurbanized Area Formula program (Section 5311 under Title 49, United States Code). Technical assistance regarding these requirements is available in each FTA regional office. For incremental capital costs, applicants must comply with all of the Federal requirements described in this section, either when purchasing wheelchair lifts and securement devices to retrofit existing vehicles, or when purchasing new wheelchair accessible vehicles. When purchasing new wheelchair accessible buses, these Federal requirements apply to the purchase of the vehicle itself, not just the wheelchair lift or securement devices. As lifts are normally purchased as part of a bus procurement, Federal requirements that apply to the lift also apply to the purchase of the bus. In particular, Buy America, labor protections, pre-award and post-delivery reviews and bus testing will apply to the total vehicle purchase, not just the lift.

Training costs are not subject to all requirements. For example, labor protections, Buy America, pre-award and post-delivery reviews, bus testing, and school transportation are not applicable to training assistance.

1. *Buy America.* Federal funds may not be obligated for projects unless steel, iron, and manufactured products used in such projects are produced in the United States. Recipients of the OTRB Accessibility program funds must conform with the FTA regulations, 49 CFR Part 661, and any amendments thereto. There are four exceptions to the basic requirement that may be the basis for a waiver. First, the requirement will not apply if its application is not in the public interest. Second, the requirement will not apply if materials and products being procured are not produced in the United States in sufficient and reasonably available quantities and of a satisfactory quality. Third, the requirement will not apply in a case involving the procurement of buses and other rolling stock if the cost of components and subcomponents which are produced in the United States is more than 60 percent of the cost of all components and subcomponents of the vehicles or equipment, and if final assembly takes place in the United States. The meaning of final assembly is

further described in the FTA Guidance on Buy America Requirements, dated March 18, 1997, which applies to all buses purchased with FTA funds. Fourth, the requirement will not apply if the inclusion of domestic material will increase the overall project contract by more than 25 percent. Buy America waivers under the non-availability, price differential, and public interest exceptions require FTA approval, but the waiver for rolling stock meeting the domestic content and final assembly requirements does not. FTA has issued a general waiver for selected items, including all purchases under the Federal small purchase threshold, which is $100,000.

2. *Labor Protection*. Before FTA may award a grant for capital assistance, 49 U.S.C. 5333(b) requires that fair and equitable arrangements must be made to protect the interests of transit employees affected by FTA assistance. Those arrangements must be certified by the Secretary of Labor as meeting the requirements of the statute. When a labor organization represents a group of affected employees in the service area of an FTA project, the employee protective arrangement is usually the product of negotiations or discussions with the union. The grant applicant can facilitate Department of Labor (DOL) certification by identifying in the application any previously certified protective arrangements that have been applied to similar projects undertaken by the grant applicant. Upon receipt of a grant application requiring employee protective arrangements, FTA will transmit the application to DOL and request certification of the employee protective arrangements. In accordance with DOL guidelines, DOL notifies the relevant unions in the area of the project that a grant for assistance is pending and affords the grant applicant and union the opportunity to agree to an arrangement establishing the terms and conditions of the employee protections. If necessary, DOL furnishes technical and mediation assistance to the parties during their negotiations. The Secretary of Labor may determine the protections to be certified if the parties do not reach an agreement after good faith bargaining and mediation efforts have been exhausted. DOL will also set the protective conditions when affected employees in the service area are not represented by a union. When DOL determines that employee protective arrangements comply with labor protection requirements, DOL will provide a certification to FTA. The grant agreement between FTA and the grant applicant incorporates by reference the employee protective arrangements certified by DOL.

Questions concerning employee protective arrangements and related matters pertaining to transit employees should be addressed to the Division of Statutory Programs, Department of Labor, 200 Constitution Avenue, NW, Room N–5411, Washington, DC 20210; telephone (202) 693–0126, fax (202) 219–5338.

3. *Competitive Procurement.* Federal procurement requirements apply to FTA funds awarded to state and local governments and private nonprofit agencies under 49 CFR Parts 18 and 19. To the extent a direct recipient of FTA funds under this program is a private for-profit entity, the Federal procurement requirements do not apply.

4. *Debarment, Suspension and Other Responsibility matters.* Pursuant to Executive Order 12549; 41 U.S.C. 701; and 49 CFR Part 29, grantees must ensure that FTA funds are not given to anyone who has been debarred, suspended, or declared ineligible or voluntarily excluded from participation in federally assisted transactions. The burden of disclosure is on those debarred or suspended. The U.S. General Services Administration (GSA) issues a document titled ''Lists of Parties Excluded from Federal Procurement or Nonprocurement Programs'' monthly. The list is available on the GSA website (*http//www.gsa.gov/index*). If at any time the grantee or other covered entity learns that a certification it made or received was erroneous when submitted or if circumstances have changed, disclosure to FTA is required.

5. *Drug-Free Workplace.* Grantees must maintain a drug-free workplace for all employees and have an anti-drug policy and awareness program. The grant applicant must certify to FTA that it will provide a drug-free workplace and comply with all requirements of the Drug-Free Workplace Act of 1988 (Public Law 100–690) and U.S. DOT's implementing regulations, 49 CFR Part 29, Subpart F. The grantee is required to provide a written Drug-Free Workplace policy statement notifying employees that the unlawful manufacture, distribution, dispensing, possession, or use of a controlled substance is prohibited in the workplace and stating specific actions that will be taken for violations. The ongoing drug-free awareness program must inform employees about the dangers of drug abuse; about any available drug counseling, rehabilitation, and employee assistance programs; about penalties that may be imposed; and that employees are to be aware that the recipient operates a drug-free workplace. An employee of an FTA grantee is required to report in any conviction for a violation of criminal drug statute occurring in the workplace, and the grantee/employer is required to provide written notice to FTA within 10 days of having received the notice. Within 30 days of receiving the notice of a conviction, the grantee/employer must have taken appropriate action against the employee or have required participation in a drug abuse assistance or rehabilitation program.

6. *Nondiscrimination requirements.* 49 U.S.C. section 5332 states that ''a person (defined broadly) may not be excluded from participating in, denied a benefit of, or discriminated against, under a project, program, or actively receiving financial assistance (from FTA) because of race, color, creed, national origin, sex, or age.''

7. *Title VI.* Grantees must assure FTA that transit services and benefits obtained with FTA assistance will be provided in a nondiscriminatory manner, without regard to race, color, or national origin.

8. *Disadvantaged Business Enterprise.* Grantees must assure FTA that disadvantaged business enterprises (DBEs) are provided the maximum opportunity to compete for FTA-assistance contracts and procurements.

9. *Equal Employment Opportunity (EEO).* The grantee must assure that it will notdiscriminate against any employee or applicant for employment because of race, color, creed, sex, disability, age or national origin. The grantee agrees to take affirmative action to ensure that applicants are employed and that employees are treated during employment, without regard to their race, color, creed, sex, disability, age, or national origin.

10. *Americans with Disabilities Act and Section 504.* Compliance with the Americans with Disabilities Act of 1990 (ADA) (Public Law 101–336) and Section 504 of the Rehabilitation Act of 1973, as amended, are eligibility requirements for Federal financial assistance. Section 504 prohibits discrimination on the basis of handicap by recipients of Federal financial assistance. The ADA prohibits discrimination against persons with disabilities in the provision of transportation services.

11. *Restrictions on Lobbying.* Federal financial assistance may not be used to influence any member of Congress or an officer or employee of any agency in connection with the making of any Federal contract, grant, or cooperative agreement. The state, subrecipients, and third party contractors at any tier

awarded FTA assistance exceeding $100,000 must sign a certification so stating and also must disclose the expenditure of non-Federal funds for such purposes (49 CFR Part 20). Other Federal laws also govern lobbying activities. For example, Federal funds may not be used for lobbying congressional representatives or senators indirectly, such as by contributing to a lobbying organization or funding a grass-roots campaign to influence legislation (31 U.S.C. Section 1352). General advocacy for over-the-road bus transportation and providing information to legislators about the services a recipient provides are not prohibited, nor is using non-Federal funds for lobbying, so long as the required disclosures are made.

12. *Pre-award and Post-delivery reviews.* Pursuant to 49 USC 5323(l), procurements for vehicles, other than sedans or unmodified vans, must be audited in accordance with FTA regulation, ''Pre-Award and Post-Delivery Audits of Rolling Stock Purchases,'' 49 CFR Part 663. Additional guidance is available in a manual, ''Conducting Pre-Award and Post-Delivery Reviews for Bus Procurement,'' published May 1, 1995. The regulation requires that any recipient who purchases rolling stock for use in revenue service with funds obligated after October 24, 1991, conduct a pre-award and post-delivery review to assurance compliance with its bid specifications, Buy America requirements, and Federal Motor Vehicle Safety requirements, and to complete certifications. Purchase of more than ten vehicles, other than unmodified vans or sedans, requires in-plant inspection.

13. *Bus Testing.* Pursuant to 49 USC 5323(c), all new bus models purchased with FTA funds must be tested in accordance with 49 USC 5318 and 49 CFR part 665, before FTA funds can be expended to acquire them. Purchasers of new model buses should ensure that the manufacturer has complied with the testing requirements by requesting a copy of the bus testing report from the Altoona Bus Testing Center, 6th Avenue and 45th Street, Altoona, Pennsylvania 16602. The telephone number is (814) 949–7944.

14. *School Transportation.* 49 USC 5323(f) prohibits the use of FTA funds for exclusive school bus transportation for school students and school personnel. The implementing regulation (49 CFR part 603) does permit regular service to be modified to accommodate school students along with the general public.

15. *Environmental Protection.* Neither capital costs associated with making vehicles wheelchair accessible nor training costs involve significant environmental impacts. Projects that do not involve significant environmental impacts are considered ''categorical exclusions'' in FTA's procedures because they have been categorically excluded from FTA's requirements to prepare environmental documentation. (49 USC part 622, incorporating 23 CFR part 771).

16. *Planning.* Applicants are encouraged to notify the appropriate state departments of transportation and metropolitan planning organizations (MPO) in areas likely to be served by equipment made accessible through funds made available in this program. Those organizations, in turn, should take appropriate steps to inform the public and individuals requiring fully accessible services in particular, of operators' intentions to expand the accessibility of their services. Incorporation of funded projects in the plans and transportation improvement programs of states and metropolitan areas by States and MPOs also is encouraged, but is not required.

II. Guidelines for Preparing Grant Application

FTA is conducting a national solicitation for applications under the OTRB Accessibility program. Grant awards will be made on a competitive basis. Although most FTA grant applications are now submitted electronically, paper applications for the OTRB Accessibility program will be accepted. An original and two copies of the application must be submitted to the appropriate FTA Regional Office. The OTRB operators should submit the application to the office in the region in which its headquarters office is located. The application should provide information on all items for which you are requesting funding in FY 1999. The application must include the following elements:

1. Transmittal Letter

This addresses basic identifying information including:

a. Grant applicant
b. Contact name and phone number
c. Amount of grant request

2. Project Eligibility

Every application must:

a. Described the applicant's technical, legal, and financial capacity to implement the proposed projects.

b. Document matching funds, including amount and source.

c. Include OMB Standard Form 424, ''Federal Assistance,'' which is a multi-purpose form that must be completed in its entirety. The forms are available from the FTA regional offices.

3. Project Information

Provide a summary of project activities for which you are requesting funds. The summary should include:

a. Each project's time line, including significant milestones such as date of contract for purchase of vehicle(s), and expected delivery of vehicle(s).

b. Project budget (see Appendix B).

4. Project Narrative

Provide the information identified below to support your application. Grants will be awarded competitively based upon the following criteria:

a. The identified need for over-the-road bus accessibility for persons with disabilities in the areas served by the applicant;

b. The extent to which the applicant demonstrates innovative strategies and financial commitment to providing access to over-the-road buses to persons with disabilities;

c. The extent to which the over-the-road bus operators acquires equipment required by DOT's over-the-road bus accessibility rule prior to the required timeframe in the rule;

d. The extent to which financing the costs of complying with DOT's rule presents a financial hardship for the applicant; and

e. The impact of accessibility requirements on the continuation of over-the-road bus service, with particular consideration of the impact of the requirements on service to rural areas and for low-income individuals.

III. Grant Review Process

Applications are to be submitted to the appropriate FTA Regional Office by the close of business on April 16, 1999. FTA will screen all applications to determine whether all required eligibility elements, as described in Section 2 of the application, are present. An FTA task force will evaluate each application according to the criteria described in this announcement.

A. Notification

FTA will notify all applicants for funding in June 1999. Grants are expected to be made by September 30, 1999, the end of Federal fiscal year 1999. FTA is committed to obligating FY 1999 OTRB Accessibility program funds expeditiously. Therefore, FTA urges applicants to develop and submit with their applications complete documentation necessary to meet the

applicable FTA Section 5311 requirements.

Issued on February 2, 1999.

Gordon J. Linton,

Administrator.

Appendix A—FTA Regional Offices

Region I—Massachusetts, Rhode Island, Connecticut, New Hampshire, Vermont and Maine

Richard H. Doyle, FTA Regional Administrator, Volpe National Transportation Systems Center, Kendall Square, 55 Broadway, Suite 920, Cambridge, MA 02142–1093, (617) 494–2055

Region II—New York, New Jersey, Virgin Islands

Letitia Thompson, FTA Regional Administrator, 26 Federal Plaza, Suite 2940, New York, NY 10278–0194, (212) 264–8162

Region III—Pennsylvania, Maryland, Virginia, West Virginia, Delaware, Washington, DC

Sheldon Kinbar, FTA Regional Administrator, 1760 Market Street, Suite 500, Philadelphia, PA 19103–4124, (215) 656–7100

Region IV—Georgia, North Carolina, South Carolina, Florida, Mississippi, Tennessee, Kentucky, Alabama, Puerto Rico

Susan Schruth, FTA Regional Administrator, 61 Forsyth Street, S.W., Suite 17T50, Atlanta, GA 30303, (404) 562–3500

Region V—Illinois, Indiana, Ohio, Wisconsin, Minnesota, Michigan

Joel Ettinger, FTA Regional Administrator, 200 West Adams Street, Suite 2410, Chicago, IL 60606–5232, (312) 353–2789

Region VI—Texas, New Mexico, Louisiana, Arkansas, Oklahoma

Lee Waddleton, FTA Regional Administrator, 819 Taylor Street, Room 8A36, Ft. Worth, TX 76102, (817) 978–0550

Region VII—Iowa, Nebraska, Kansas, Missouri

Mokhtee Ahmad, FTA Regional Administrator, 6301 Rockhill Road, Suite 303, Kansas City, MO 64131–1117, (816) 523–0204

Region VIII—Colorado, North Dakota, South Dakota, Montana, Wyoming, Utah

Louis Mraz, FTA Regional Administrator, Columbine Place, 216 16th Street, Suite 650, Denver, CO 80202–5120, (303) 844–3242

Region IX—California, Arizona, Nevada, Hawaii, American Samoa, Guam

Leslie Rogers, FTA Regional Administrator, 201 Mission Street, Suite 2210, San Francisco, CA 94105–1831, (415) 744–3133

Region X—Washington, Oregon, Idaho, Alaska

Helen Knoll, FTA Regional Administrator, Jackson Federal Building, 915 Second Avenue, Suite 3142, Seattle, WA 98174–1002, (206) 220–7954

GRANTEE: Hillsdale Bus Company
PROJECT: OR–38–0001

Scope	Activity	Federal share	Eligible project cost
111–01	BUS ROLLING STOCK.		
	11.42.43 INCREMENTAL COST OF LIFT QUANTITY: 1	$15,000	$30,000
	11.44.43 RETROFIT VEHICLE WITH LIFT QUANTITY 1	22,000	44,000
117–00	BUS—OTHER.		
	11.7E.01 TRAINING	10,000	20,000
	ELIGIBLE PROJECT COST	94,000	
	FEDERAL SHARE	47,000	
	APPLICANT SHARE	47,000	

Appendix C—Certifications and Assurances for Over-the-Road Bus Accessibility Program Grants

Before FTA may aware a Federal grant agreement, the applicant must provide to FTA all certifications and assurances required by Federal laws and regulations for the applicant or its project. This Appendix provides the text of certifications and assurances required by Federal law, regulations, or directives for the Over-the-road Bus Accessibility Program.

Included at the end of this document is a single signature page on which the applicant and its attorney certify compliance with all certifications and assurances applicable to each project for which the applicant is applying.

An applicant's Annual Certifications and Assurances applicable to a specific grant generally remain in effect for the life of the grant to closeout, or the life of the project or project property when a useful life or standard industry life is in effect. If in a later year, however, the Applicant provides certifications and assurances that differ from the certifications and assurances previously made, the later certifications and assurances will apply to the grant, project, or project property, except as FTA otherwise permits.

Procedures

Following is a detailed compilation of Certifications and Assurances and the Signature Page. The Signature Page is to be signed by the applicant's authorized representative and its attorney. It is to be submitted to the appropriate regional office along with the applicant's grant application.

All applicants are advised to read the entire list of Certifications and Assurances to be confident of their responsibilities and commitments. The applicant may signify compliance with all Categories by placing a single ''X'' in the appropriate space at the top of the Signature Selection Page.

The Signature Page, once properly signed and submitted to FTA, assures FTA that the applicant intends to comply with the requirements for the Over-the-road Bus Accessibility Program. All applicants must read the selection portion and the signature portion of this document and signify compliance by marking, where appropriate, with an ''X'' on the category selection side, and then signifying compliance as indicated. The applicant should not hesitate to consult with the appropriate FTA Regional Office before submitting its certifications and assurances.

References

The Transportation Equity Act for the 21st Century, Pub. L. 105–178, June 9, 1998, as amended by the TEA–21 Restoration Act 105–206, 112 Stat. 685, July 22, 1998, 49 U.S.C. chapter 53, Title 23 U.S.C., U.S. DOT and FTA regulations under 49 CFR, and FTA Circulars.

Over-the-road Bus Accessibility Program Certifications and Assurances

In accordance with 49 U.S.C.5323(n), the following certifications and assurances have been compiled for the Over-the-road Bus Accessibility program. FTA requests each Applicant provide as many of the following certifications and assurances as needed to cover the types of projects for which the Applicant is seeking FTA assistance. The categories of certifications and assurances are listed by Roman numerals I through V on one side of the Signature Page of this document. Categories II through V will apply to some, but not necessarily all, applicants. The designation of the categories corresponds to the circumstances mandating submission of specific certifications, assurances, or agreements.

I. Certifications and Assurances Required of Each Applicant

Each Applicant for Over-the-road Bus Accessibility funding assistance awarded by FTA must provide all certifications and assurances in this Category I. Accordingly, FTA may not award any Federal assistance until the Applicant provides assurance of

compliance by selecting Category I on the Signature Page at the end of this document.

A. Authority of Applicant and Its Representative

The authorized representative of the Applicant and legal counsel who sign these certifications, assurances, and agreements attest that both the Applicant and its authorized representative have adequate authority under state and local law and the by-laws or internal rules of the Applicant organization to:

(1) Execute and file the application for Federal assistance on behalf of the Applicant,

(2) Execute and file the required certifications, assurances, and agreements on behalf of the Applicant binding the Applicant, and

(3) Execute grants with FTA on behalf of the Applicant.

B. Standard Assurances

The Applicant assures that it will comply with all applicable Federal statutes, regulations, executive orders, FTA circulars, and other Federal administrative requirements in carrying out any project supported by an FTA grant. The Applicant acknowledges that it is under a continuing obligation to comply with the terms and conditions of the grant issued for its project with FTA. The Applicant understands that Federal laws, regulations, policies, and administrative practices might be modified from time to time and affect the implementation of the project. The Applicant agrees that the most recent Federal requirements will apply to the project, unless FTA issues a written determination otherwise.

C. Debarment, Suspension, and Other Responsibility Matters—Primary Covered Transactions

As required by U.S. DOT regulations on Governmentwide Debarment and Suspension (Nonprocurement) at 49 CFR 29.510:

(1) The Applicant (Primary Participant) certifies, to the best of its knowledge and belief, that it and its principals:

(a) Are not presently debarred, suspended, proposed for debarment, declared ineligible, or voluntarily excluded from covered transactions by any Federal department or agency;

(b) Have not, within a three-year period preceding this certification, been convicted of or had a civil judgment rendered against them for commission of fraud or a criminal offense in connection with obtaining, attempting to obtain, or performing a public (Federal, state, or local) transaction or contract under a public transaction, violation of Federal or state antitrust statutes, or commission of embezzlement, theft, forgery, bribery, falsification or destruction of records, making false statements, or receiving stolen property;

(c) Are not presently indicted for or otherwise criminally or civilly charged by a governmental entity (Federal, state, or local) with commission of any of the offenses listed in subparagraph (1)(b) of this certification; and

(d) Have not within a three-year period preceding this certification had one or more public transactions (Federal, state, or local) terminated for cause or default.

(2) The Applicant also certifies that, if it later becomes aware of any information contradicting the statements of paragraph (1) above, it will promptly provide that information to FTA.

(3) If the Applicant (Primary Participant) is unable to certify to the statements in paragraphs (1) and (2) above, it shall indicate so on its Signature Page and provide a written explanation to FTA.

D. Drug-Free Workplace Agreement

As required by U.S. DOT regulations, ''Drug-Free Workplace Requirements (Grants),'' 49 CFR Part 29, Subpart F, as modified by 41 U.S.C. 702, the Applicant agrees that it will provide a drug-free workplace by:

(1) Publishing a statement notifying its employees that the unlawful manufacture, distribution, dispensing, possession, or use of a controlled substance is prohibited in its workplace and specifying the actions that will be taken against its employees for violation of that prohibition;

(2) Establishing an ongoing drug-free awareness program to inform its employees about:

(a) The dangers of drug abuse in the workplace,

(b) Its policy of maintaining a drug-free workplace,

(c) Any available drug counseling, rehabilitation, and employee assistance programs, and

(d) The penalties that may be imposed upon its employees for drug abuse violations occurring in the workplace;

(3) Making it a requirement that each of its employees to be engaged in the performance of the grant or cooperative agreement be given a copy of the statement required by paragraph (1);

(4) Notifying each of its employees in the statement required by paragraph (1) that, as a condition of employment financed with Federal assistance provided by the grant or cooperative agreement, the employee will be required to:

(a) Abide by the terms of the statement, and

(b) Notify the employer (Applicant) in writing of any conviction for a violation of a criminal drug statute occurring in the workplace no later than 5 calendar days after that conviction;

(5) Notifying FTA in writing, within 10 calendar days after receiving notice required by paragraph (4)(b) above from an employee or otherwise receiving actual notice of that conviction. The Applicant, as employer of any convicted employee, must provide notice, including position title, to every project officer or other designee on whose project activity the convicted employee was working. Notice shall include the identification number(s) of each affected grant or cooperative agreement.

(6) Taking one of the following actions within 30 calendar days of receiving notice under paragraph (4)(b) above with respect to any employee who is so convicted:

(a) Taking appropriate personnel action against that employee, up to and including termination, consistent with the requirements of the Rehabilitation Act of 1973, as amended, or

(b) Requiring that employee to participate satisfactorily in a drug abuse assistance or rehabilitation program approved for such purposes by a Federal, state, or local health, law enforcement, or other appropriate agency.

(7) Making a good faith effort to continue to maintain a drug-free workplace through implementation of paragraphs (1), (2), (3), (4), (5), and (6) above.

The Applicant agrees to maintain a list identifying its headquarters location and each workplace it maintains in which project activities supported by FTA are conducted, and make that list readily accessible to FTA.

E. Intergovernmental Review Assurance

The Applicant assures that each application for Federal assistance submitted to FTA has been or will be submitted, as required by each State, for intergovernmental review to the appropriate State and local agencies. Specifically, the Applicant assures that it has fulfilled or will fulfill the obligations imposed on FTA by U.S. DOT regulations, ''Intergovernmental Review of Department of Transportation Programs and Activities,'' 49 CFR part 17.

F. Nondiscrimination Assurance

As required by 49 U.S.C. 5332 (which prohibits discrimination on the basis of race, color, creed, national origin, sex, or age, and prohibits discrimination in employment or business opportunity), Title VI of the Civil Rights Act of 1964, as amended, 42 U.S.C. 2000d, and U.S. DOT regulations, ''Nondiscrimination in Federally-Assisted Programs of the Department of Transportation—Effectuation of Title VI of the Civil Rights Act,'' 40 CFR part 21 at 21.7, the Applicant assures that it will comply with all requirements of 49 CFR part 21; FTA Circular 4702.1, ''Title VI Program Guidelines for Federal Transit Administration Recipients'', and other applicable directives, so that no person in the United States, on the basis of race, color, national origin, creed, sex, or age will be excluded from participation in, be denied the benefits of, or otherwise be subjected to discrimination in any program or activity (particularly in the level and quality of transportation services and transportation-related benefits) for which the Applicant receives Federal assistance awarded by the U.S. DOT or FTA as follows:

(1) The Applicant assures that each project will be conducted, property acquisitions will be undertaken, and project facilities will be operated in accordance with all applicable requirements of 49 U.S.C. 5332 and 49 CFR part 21, and understands that this assurance extends to its entire facility and to facilities operated in connection with the project.

(2) The Applicant assures that it will take appropriate action to ensure that any transferee receiving property financed with Federal assistance derived from FTA will comply with the applicable requirements of 49 U.S.C. 5332 and 49 CFR part 21.

(3) The Applicant assures that it will promptly take the necessary actions to effectuate this assurance, including notifying the public that complaints of discrimination

in the provision of transportation-related services or benefits may be filed with U.S. DOT or FTA. Upon request by U.S. DOT or FTA, the Applicant assures that it will submit the required information pertaining to its compliance wit these requirements.

(4) The Applicant assures that it will make any changes in its 49 U.S.C. 5332 and Title VI implementing procedures as U.S. DOT or FTA may request.

(5) As required by 49 CFR 21.7(a)(2), the Applicant will include in each third party contract or subagreement appropriate provisions to impose the requirements of 49 U.S.C. 5332 and 49 CFR part 21, and include appropriate provisions imposing those requirements in deeds and instruments recording the transfer of real property, structures, improvements.

G. Assurance of Nondiscrimination on the Basis of Disability

As required by U.S. DOT regulations, ''Nondiscrimination on the Basis of Handicap in Programs and Activities Receiving or Benefiting from Federal Financial Assistance,'' at 49 CFR part 27, implementing the Rehabilitation Act of 1973, as amended, and the Americans with Disabilities Act of 1990, as amended, the Applicant assures that, as a condition to the approval or extension of any Federal assistance awarded by FTA to construct any facility, obtain any rolling stock or other equipment, undertake studies, conduct research, or to participate in or obtain any benefit from any program administered by FTA, no otherwise qualified person with a disability shall be, solely by reason of that disability, excluded from participation in, denied the benefits of, or otherwise subjected to discrimination in any program or activity receiving or benefiting from Federal assistance administered by the FTA or any entity within U.S. DOT. The applicant assure that project implementation and operations so assisted will comply with all applicable requirements of U.S. DOT regulations implementing the Rehabilitation Act of 1973, as amended, 29 U.S.C. 794, and the Americans with Disabilities Act of 1990, as amended, 42 U.S.C. 12101 et seq. at 49 CFR parts 27, 37, and 38, and any applicable regulations and directives issued by other Federal departments or agencies.

I. Certifications Prescribed by the Office of Management and Budget (SF–424B and SF–424D)

The Applicant certifies that it:

(1) Has the legal authority to apply for Federal assistance and the institutional, managerial, and financial capability (including funds sufficient to pay the non-Federal share of project cost) to ensure proper planning, management, and completion of the project described in its application.

(2) Will give FTA, the Comptroller General of the United States and, if appropriate, the State, through any authorized representative, access to and the right to examine all records, books, papers, or documents related to the award; and will establish a proper accounting system in accordance with generally accepted accounting standards or agency directives.

(3) Will establish safeguards to prohibit employees form using their positions for a purpose that constitutes or presents the appearance of personal or organizational conflict of interest or personal gain.

(4) Will initiate and complete the work within the applicable project time periods following receipt of FTA approval.

(5) Will comply with all statutes relating to nondiscrimination including, but not limited to:

(a) Title VI of the Civil Rights Act, 42 U.S.C. 2000d, which prohibits discrimination on the basis of race, color, or national origin;

(b) Title IX of the Education Amendments of 1972, as amended, 20 U.S.C. 1681, 1683, and 1685 through 1687, which prohibits discrimination on the basis of sex;

(c) Section 504 of the Rehabilitation Act of 1973, as amended, 29 U.S.C. 794, which prohibits discrimination on the basis of handicaps;

(d) The Age Discrimination Act of 1975, as amended, 42 U.S.C. 6101 through 6107, which prohibits discrimination on the basis of age;

(e) The Drug Abuse Office and Treatment Act of 1972, Pub. L. 92–255, March 21, 1972, and amendments thereto, relating to nondiscrimination on the basis of drug abuse;

(f) The Comprehensive Alcohol Abuse and Alcoholism Prevention Act of 1970, Pub. L. 91–616, Dec. 31, 1970, and amendments thereto, relating to nondiscrimination on the basis of alcohol abuse or alcoholism;

(g) The Public Health Service Act of 1912, as amended, 42 U.S.C. 290dd–3 and 290ee–3, related to confidentiality of alcohol and drug abuse patient records;

(h) Title VIII of the Civil Rights Act, 42 U.S.C. 3601 et seq., relating to nondiscrimination in the sale, rental, or financing of housing;

(i) Any other nondiscrimination provisions in the specific statutes under which Federal assistance for the project may be provided including, but not limited to section 1101(b) of the Transportation Equity Act for the 21st Century, 23 U.S.C. 101 note, which provides for participation of disadvantaged business enterprises in FTA programs; and

(j) The requirements of any other nondiscrimination statute(s) that may apply to the project.

(6) Will comply, or has complied, with the requirements of Titles II and III of the Uniform Relocation Assistance and Real Property Acquisition Policies Act of 1970, as amended, (Uniform Relocation Act) 42 U.S.C. 4601 et seq., which provide for fair and equitable treatment of persons displaced or whose property is acquired as a result of Federal or federally-assisted programs. These requirements apply to all interests in real property acquired for project purposes regardless of Federal participation in purchases. These requirements apply to all interests in real property acquired for project purposes regardless of Federal participation in purchases. As required by U.S. DOT regulations, ''Uniform Relocation Assistance and Real Property Acquisition for Federal and Federally assisted Programs,'' at 49 CFR 24.4, and sections 210 and 305 of the Uniform Relocation Act, 42 U.S.C. 4630 and 4655, the Applicant assures that it has the requisite authority under applicable state and local law and will comply or has complied with the requirements of the Uniform Relocation Act, 42 U.S.C. 4601 et seq., and U.S. DOT regulations, ''Uniform Relocation Assistance and Real Property Acquisition for Federal and Federally Assisted Programs,'' 49 CFR 24 including, but not limited to the following:

(a) The Applicant will adequately inform each affected person of the benefits, policies, and procedures provided for in 49 CFR part 24;

(b) The Applicant will provide fair and reasonable relocation payments and assistance required by 42 U.S.C. 4622, 4623, and 4624; 49 CFR part 24; and any applicable FTA procedures, to or for families, individuals, partnerships, corporations or associations displaced as a result of any project financed with FTA assistance;

(c) The Applicant will provide relocation assistance programs offering the services described in 42 U.S.C. 4625 to such displaced families, individuals, partnerships, corporations or associations in the manner provided in 49 CFR part 24 and FTA procedures;

(d) Within a reasonable time before displacement, the Applicant will make available comparable replacement dwellings to displaced families and individuals as required by 42 U.S.C. 4625(c)(3);

(e) The Applicant will carry out the relocation process in such a manner as to provide displaced persons with uniform and consistent services, and will make available replacement housing in the same range of choices with respect to such housing to all displaced persons regardless of race, color, religion, or national origin;

(f) In acquiring real property, the Applicant will be guided to the greatest extent practicable under state law, but the real property acquisition policies of 42 U.S.C. 4651 and 4652;

(g) The Applicant will pay or reimburse property owners for necessary expenses as specified in 42 U.S.C. 4653 and 4654, understanding that FTA will participate in the Applicant's costs of providing those payments and that assistance for the project as required by 42 U.S.C. 4631;

(h) The Applicant will execute such amendments to third party contracts and subagreements financed with FTA assistance and execute, furnish, and be bound by such additional documents as FTA may determine necessary to effectuate or implement the assurances provided herein, and

(i) The Applicant agrees to make these assurances part of or incorporate them by reference into any third party contract or subagreement, or any amendments thereto, relating to any project financed by FTA involving relocation or land acquisition and provide in any affected document that these relocation and land acquisition provisions shall supersede any conflicting provisions,

(7) Will comply, as applicable, with provisions of the Hatch Act, 5 U.S.C. 1501 through 1508, and 7324 through 7326, which limit the political activities of state and local agencies and their officers and employees whose principal employment activities are financed in whole or part with Federal funds including a Federal loan, grant, or cooperative agreement, but does not apply to

a nonsupervisory employee of a transit system (or of any other agency or entity performing related functions) receiving FTA assistance to whom the Hatch Act does not otherwise apply.

(8) To the extent applicable will comply with the Davis-Bacon Act, as amended, 40 U.S.C. 276a through 276a(7), the Copeland Act, as amended, 18 U.S.C. 874 and 40 U.S.C. 276c, and the Contract Work Hours and Safety Standards Act, as amended, 40 U.S.C. 327 through 333, regarding labor standards for federally-assisted subagreements.

(9) To the extent applicable, will comply with flood insurance purchase requirements of section 102(a) of the Flood Disaster Protection Act of 1973, as amended, 42 U.S.C. 4012a(a), which requires recipients in a special flood hazard area to participate in the program and to purchase flood insurance if the total cost of insurable construction and acquisition is $10,000 or more.

(10) Will comply with environmental standards that may be prescribed to implement the following Federal laws and executive orders.

(a) Institution of environmental quality control measures under the National Environmental Policy Act of 1969, as amended, 42 U.S.C. 4321 et seq. and Executive Order No. 11514, as amended, 42 U.S.C. 4321 note;

(b) Notification of violating facilities pursuant to Executive Order No. 11738, 42 U.S.C. 7606 note;

(c) Protection of wetlands pursuant to Executive Order No. 11990, 42 U.S.C. 4321 note;

(d) Evaluation of flood hazards of floodplains in accordance with Executive Order 11988, 42 U.S.C. 4321 note;

(e) Assurance of project consistency with the approved State management program developed under the Coastal Zone Management Act of 1972, as amended, 16 U.S.C. 1451 et seq.;

(f) Conformity of Federal actions to State (Clean Air) Implementation Plans under section 176(c) of the Clean Air Act of 1955, as amended, 42 U.S.C. 7401 et seq.;

(g) Protection of underground sources of drinking water under the Safe Drinking Water Act of 1974, as amended, 42 U.S.C. 300h et seq.;

(h) Protection of endangered species under the Endangered Species Act of 1973, as amended, Endangered Species Act of 1973, as amended, 16 U.S.C. 1531 et seq.; and

(i) Environmental protections for Federal transit programs, including, but no limited to protections for a park, recreation area, or wildlife or waterfowl refuge of national, state, or local significance or any land from a historic site of a national, state, or local significance used in a transit project as required by 49 U.S.C. 303.

(11) Will comply with the Wild and Scenic Rivers Act of 1968, as amended, 15 U.S.C. 1271 et seq. relating to protecting components of the national wild and scenic rivers systems.

(12) Will assist FTA in assuring compliance with section 106 of the National Historic Preservation Act of 1966, as amended, 16 U.S.C. 470f, Executive Order No. 11593 (identification and protection of historic properties), 16 U.S.C. 470 note, and the Archaeological and Historic Preservation Act of 1974, as amended, 16 U.S.C. 469a–I et seq.

(13) Will comply with the Lead-Based Paint Poisoning Prevention Act, 42 U.S.C. 4801, which prohibits the use of lead-based paint in construction or rehabilitation of residence structures.

(14) Will not dispose of, modify the use of, or change the terms of the real property title, or other interest in the site and facilities on which a construction project supported with FTA assistance takes place without permission and instruction from the awarding agency. Will record the Federal interest in the title of real property in accordance with FTA directives and will include a covenant in the title of real property acquired in whole or in part with Federal assistance funds to assure nondiscrimination during the useful life of the project.

(15) Will comply with FTA requirements concerning the drafting, review, and approval of construction plans and specifications of any construction project supported with FTA assistance. As required by U.S. DOT regulations, ''Seismic Safety,'' 49 CFR 41.117(d), before accepting delivery of any building financed with FTA assistance, it will obtain a certificate of compliance with the seismic design and construction requirements of 49 CFR part 41.

(16) Will provide and maintain competent and adequate engineering supervision at the construction site of any project supported with FTA assistance to ensure that the complete work conforms with the approved plans and specifications and will furnish progress reports and such other information as may be required by FTA or the State.

(17) Will comply with the National Research Act, Pub. L. 93–348, July 12, 1974, as amended, regarding the protection of human subjects involved in research, development, and related activities supported by the FTA assistance.

(18) Will comply with the Laboratory Animal Welfare Act of 1966, as amended, 7 U.S.C. 2131 et seq. pertaining to the care, handling, and treatment of warm blooded animals held for research, teaching, or other activities supported by FTA assistance.

(19) Will have performed the required financial and compliance audits in accordance with the Single Audit Act Amendments of 1996, 31 U.S.C. 7501 et seq. and OMB Circular No. A–133, ''Audits of States, Local Governments, and Non-Profit Organizations.''

(20) Will comply with all applicable requirements of all other Federal laws, executive orders, regulations, and policies governing the project.

II. Lobbying Certification for an Application Exceeding $100,000

An Applicant that submits an application for Federal assistance exceeding $100,000 must provide the following certification. FTA may not provide Federal assistance for an application exceeding $100,000 until the Applicant provides this certification by selecting Category II on the Signature Page.

A. As required by U.S. DOT regulations, ''New Restrictions on Lobbying,'' at CFR 20.110, the Applicant's authorized representative certifies to the best of his or her knowledge and belief that for each application for a Federal assistance exceeding $100,000:

(1) No Federal appropriated funds have been or will be paid, by or on behalf of the Applicant, to any person for influencing or attempting to influence an officer or employee of any agency, a Member of Congress, an officer or employee of Congress, or an employee of a Member of Congress pertaining to the award of any Federal assistance, or the extension, continuation, renewal, amendment, or modification of any Federal assistance agreement; and

(2) If any funds other than Federal appropriated funds have been or will be paid to any person for influencing or attempting to influence an officer or employee of any agency, a Member of Congress, an officer or employee of Congress, or an employee of a Member of Congress in connection with any application to FTA for Federal assistance, the Applicant assures that it will complete and submit Standard Form-LLL, ''Disclosure Form to Report Lobbying,'' including the information required by the form's instructions, which may be amended to omit such information as permitted by 31 U.S.C. 1352.

B. The Applicant understands that this certification is a material representation of fact upon which reliance is placed and that submission of this certification is a prerequisite for providing Federal assistance for a transaction covered by 31 U.S.C. 1352. The Applicant also understands that any person who fails to file a required certification shall be subject to a civil penalty of not less than $10,000 and not more than $100,000 for each such failure.

III. Certification of Pre-Award and Post-Delivery Reviews Required for Acquisition of Rolling Stock

An Applicant seeking FTA assistance to purchase rolling stock must provide the following certification. FTA may not provide assistance for any rolling stock acquisition until the Applicant provides this certification by selecting Category III on the Signature Page.

As required by 49 U.S.C. 5323(m), and implementing FTA regulations at 49 CFR 663.7, the Applicant certifies that it will comply with the requirements of 49 CFR part 663, in the course of purchasing revenue service rolling stock. Among other things, the Applicant will conduct or cause to be conducted the prescribed pre-award and post-delivery reviews, and will maintain on file the certifications required by 49 CFR part 663, subparts B, C, and D.

IV. Bus Testing Certification Required for New Bus Acquisitions

An Applicant seeking FTA assistance to acquire new buses must provide the following certification. FTA may not provide assistance for the acquisition of new buses until the Applicant provides this certification by selecting Category IV on the Signature Page.

As required by FTA regulations, ''Bus Testing,'' at 49 CFR 665.7, the Applicant

certifies that before expending any Federal assistance to acquire the first bus of any new bus model or any bus model with a new major change in configuration or components or authorizing final acceptance of that bus (as described in 49 CFR part 665):

A. The model of the bus will have been tested at a bus testing facility approved by FTA; and

B. It will have received a copy of the test report prepared on the bus model.

V. School Transportation Agreement

An Applicant seeking FTA assistance to acquire or operate transportation facilities and equipment acquired with Federal assistance authorized by 49 U.S.C. chapter 53 must agree as follows. FTA may not provide assistance for transportation facilities until the Applicant enters into this Agreement by selecting Category V on the Signature Page.

A. As required by 49 U.S.C. 5323(f) and FTA regulations, ''School Bus Operations,'' at 49 CFR 605.14, the Applicant agrees that it and all its recipients will:

(1) Engage in school transportation operations in competition with private school transportation operators only to the extent permitted by an exception provided by 49 U.S.C. 5323(f), and implementing regulations, and

(2) Comply with the requirements of 49 CFR part 605 before providing any school transportation using equipment or facilities acquired with Federal assistance awarded by FTA and authorized by 49 U.S.C. chapter 53 or Title 23 U.S.C. for transportation projects.

B. The Applicant understands that the requirements of 49 CFR part 605 will apply to any school transportation it provides, the definitions of 49 CFR part 605 apply to this school transportation agreement may require corrective measures and the imposition of penalties, including debarment from the receipt of further Federal assistance for transportation.

Over-the-Road Bus Accessibility Program Certifications and Assurances for FTA Assistance

NAME OF APPLICANT: _____

The Applicant agrees to comply with applicable requirements of Categories I–V _____

(The Applicant may make this selection in lieu of individual selections below.)

OR

The applicant agrees to comply with the applicable requirements of the following categories it has selected:

I. Certifications and Assurances Required of Each Applicant ..... _____
II. Lobbying Certification ..... _____
III. Certification for the Purchase of Rolling Stock ..... _____
IV. Bus Testing Certification ..... _____
V. School Transportation Agreement ..... _____

Over-the-Road Bus Accessibility Certifications and Assurances

Name of Applicant: _____

Name and relationship of Authorized Representative: _____

BY SIGNING BELOW I, _____(name), on behalf of the Applicant, declare that the Applicant has duly authorized me to make these certifications and assurances and bind the Applicant's compliance. Thus, the Applicant agrees to comply with all Federal statutes, regulations, executive orders, and administrative guidance required for each application it makes to the Federal Transit Administration (FTA).

FTA intends that the certifications and assurances the Applicant selects on the other side of this document should apply, as required, to each project for which the applicant seeks FTA assistance.

The applicant affirms the truthfulness and accuracy of the certifications and assurances it has made in the statements submitted herein with this document and any other submission made to FTA, and acknowledges that the provisions of the Program Fraud Civil Remedies Act of 1986, 31 U.S.C. 3801 et seq., as implemented by U.S. DOT regulations, ''Program Fraud Civil Remedies,'' 49 CFR part 31 apply to any certification, assurance or submission made to FTA. The criminal fraud provisions of 18 U.S.C. 1001 apply to any certification, assurance, or submission made in connection with any other program administered by FTA.

In signing this document, I declare under penalties of perjury that the foregoing certifications and assurances, and any other statements made by me on behalf of the Application are true and correct.

Signature _____

Date _____

Name _____

Authorized Representative of Applicant

Affirmation of Applicant's Attorney

For _____

(Name of Applicant)

As the undersigned legal counsel for the above name applicant, I hereby affirm to the Applicant that it has authority under state and local law to make and comply with the certifications and assurances as indicated on the foregoing pages. I further affirm that, in my opinion, the certifications and assurances have been legally made and constitute legal and binding obligstions on the applicant.

I further affirm to the Applicant that, to the best of my knowledge, there is no legislation or litigation pending or imminent that might adversely affect the validity of these certifications and assurances, or of the performance of the project. Furthermore, if I become aware of circumstances that change the accuracy of the foregoing statements, I will notify the applicant promptly, which may so inform FTA.

Signature _____

Date _____

Name _____

Applicant's Attorney

Each Applicant for FTA financial assistance and each FTA grantee with an active capital project must provide an attorney's affirmation of the Applicant's legal capacity.

Appendix D—Grant Application Checklist

1. Transmittal letter
2. SF–424
3. Project Eligibility
   a. Organizational Capacity
b. 50 percent non-Federal match
4. Project Budget
5. Project Description
   —Project Milestones
6. Project Narrative

BILLING CODE 4910–57–M

APPENDIX E

OMB Approval No. 0348-0043

APPLICATION FOR FEDERAL ASSISTANCE

2. DATE SUBMITTED	Applicant Identifier	
3. DATE RECEIVED BY STATE	State Application Identifier	
4. DATE RECEIVED BY FEDERAL AGENCY	Federal Identifier	

1. TYPE OF SUBMISSION:

Application
- ☐ **Construction**
- ☐ **Non-Construction**

Preapplication
- ☐ **Construction**
- ☐ **Non-Construction**

5. APPLICANT INFORMATION

Legal Name:	Organizational Unit:
Address *(give city, county, State, and zip code)*:	Name and telephone number of person to be contacted on matters involving this application *(give area code)*

6. EMPLOYER IDENTIFICATION NUMBER *(EIN)*:

☐☐ — ☐☐☐☐☐☐☐

7. TYPE OF APPLICANT: *(enter appropriate letter in box)* ☐

A. State
B. County
C. Municipal
D. Township
E. Interstate
F. Intermunicipal
G. Special District
H. Independent School Dist.
I. State Controlled Institution of Higher Learning
J. Private University
K. Indian Tribe
L. Individual
M. Profit Organization
N. Other (Specify) _____

8. TYPE OF APPLICATION:

☐ **New** ☐ **Continuation** ☐ **Revision**

If Revision, enter appropriate letter(s) in box(es) ☐ ☐

A. Increase Award B. Decrease Award C. Increase Duration
D. Decrease Duration Other*(specify)*:

_____

9. NAME OF FEDERAL AGENCY:

10. CATALOG OF FEDERAL DOMESTIC ASSISTANCE NUMBER:

☐☐ — ☐☐☐

TITLE:

11. DESCRIPTIVE TITLE OF APPLICANT'S PROJECT:

12. AREAS AFFECTED BY PROJECT *(Cities, Counties, States, etc.)*:

13. PROPOSED PROJECT		**14. CONGRESSIONAL DISTRICTS OF:**	
Start Date	Ending Date	a. Applicant	b. Project

15. ESTIMATED FUNDING:

a. Federal	$ .00
b. Applicant	$ .00
c. State	$ .00
d. Local	$ .00
e. Other	$ .00
f. Program Income	$ .00
g. TOTAL	$ .00

16. IS APPLICATION SUBJECT TO REVIEW BY STATE EXECUTIVE ORDER 12372 PROCESS?

a. YES. THIS PREAPPLICATION/APPLICATION WAS MADE AVAILABLE TO THE STATE EXECUTIVE ORDER 12372 PROCESS FOR REVIEW ON:

DATE _____

b. No. ☐ PROGRAM IS NOT COVERED BY E. O. 12372
☐ OR PROGRAM HAS NOT BEEN SELECTED BY STATE FOR REVIEW

17. IS THE APPLICANT DELINQUENT ON ANY FEDERAL DEBT?

☐ **Yes** **If "Yes," attach an explanation.** ☐ **No**

18. TO THE BEST OF MY KNOWLEDGE AND BELIEF, ALL DATA IN THIS APPLICATION/PREAPPLICATION ARE TRUE AND CORRECT, THE DOCUMENT HAS BEEN DULY AUTHORIZED BY THE GOVERNING BODY OF THE APPLICANT AND THE APPLICANT WILL COMPLY WITH THE ATTACHED ASSURANCES IF THE ASSISTANCE IS AWARDED.

a. Type Name of Authorized Representative	b. Title	c. Telephone Number
d. Signature of Authorized Representative		e. Date Signed

Previous Edition Usable
Authorized for Local Reproduction

Standard Form 424 (Rev. 7-97)
Prescribed by OMB Circular A-102

INSTRUCTIONS FOR THE SF-424

Public reporting burden for this collection of information is estimated to average 45 minutes per response, including time for reviewing instructions, searching existing data sources, gathering and maintaining the data needed, and completing and reviewing the collection of information. Send comments regarding the burden estimate or any other aspect of this collection of information, including suggestions for reducing this burden, to the Office of Management and Budget, Paperwork Reduction Project (0348-0043), Washington, DC 20503.

PLEASE DO NOT RETURN YOUR COMPLETED FORM TO THE OFFICE OF MANAGEMENT AND BUDGET. SEND IT TO THE ADDRESS PROVIDED BY THE SPONSORING AGENCY.

This is a standard form used by applicants as a required facesheet for preapplications and applications submitted for Federal assistance. It will be used by Federal agencies to obtain applicant certification that States which have established a review and comment procedure in response to Executive Order 12372 and have selected the program to be included in their process, have been given an opportunity to review the applicant's submission.

Item:	Entry:
1.	Self-explanatory.
2.	Date application submitted to Federal agency (or State if applicable) and applicant's control number (if applicable).
3.	State use only (if applicable).
4.	If this application is to continue or revise an existing award, enter present Federal identifier number. If for a new project, leave blank.
5.	Legal name of applicant, name of primary organizational unit which will undertake the assistance activity, complete address of the applicant, and name and telephone number of the person to contact on matters related to this application.
6.	Enter Employer Identification Number (EIN) as assigned by the Internal Revenue Service.
7.	Enter the appropriate letter in the space provided.
8.	Check appropriate box and enter appropriate letter(s) in the space(s) provided: -- "New" means a new assistance award. -- "Continuation" means an extension for an additional funding/budget period for a project with a projected completion date. -- "Revision" means any change in the Federal Government's financial obligation or contingent liability from an existing obligation.
9.	Name of Federal agency from which assistance is being requested with this application.
10.	Use the Catalog of Federal Domestic Assistance number and title of the program under which assistance is requested.
11.	Enter a brief descriptive title of the project. If more than one program is involved, you should append an explanation on a separate sheet. If appropriate (e.g., construction or real property projects), attach a map showing project location. For preapplications, use a separate sheet to provide a summary description of this project.
12.	List only the largest political entities affected (e.g., State, counties, cities).
13.	Self-explanatory.
14.	List the applicant's Congressional District and any District(s) affected by the program or project.
15.	Amount requested or to be contributed during the first funding/budget period by each contributor. Value of in-kind contributions should be included on appropriate lines as applicable. If the action will result in a dollar change to an existing award, indicate *only* the amount of the change. For decreases, enclose the amounts in parentheses. If both basic and supplemental amounts are included, show breakdown on an attached sheet. For multiple program funding, use totals and show breakdown using same categories as item 15.
16.	Applicants should contact the State Single Point of Contact (SPOC) for Federal Executive Order 12372 to determine whether the application is subject to the State intergovernmental review process.
17.	This question applies to the applicant organization, not the person who signs as the authorized representative. Categories of debt include delinquent audit disallowances, loans and taxes.
18.	To be signed by the authorized representative of the applicant. A copy of the governing body's authorization for you to sign this application as official representative must be on file in the applicant's office. (Certain Federal agencies may require that this authorization be submitted as part of the application.)

SF-424 (Rev. 7-97) Back

[FR Doc. 99–2826 Filed 2–5–99; 8:45 am]
BILLING CODE 4910–57–C

federal register

Monday
February 8, 1999

Part VI

Department of Education

Receipt of Applications for Designation as an Eligible Institution for Fiscal Year 1999 for the Strengthening Institutions, American Indian Tribally Controlled Colleges and Universities, Alaska Native and Native Hawaiian Serving Institutions, and Hispanic-Serving Institutions Programs; Closing Date Extension; Notice

DEPARTMENT OF EDUCATION

[CFDA NO. 84.031H]

Notice of Extension of Closing Date for Receipt of Applications for Designation as an Eligible Institution for Fiscal Year 1999 for the Strengthening Institutions, American Indian Tribally Controlled Colleges and Universities, Alaska Native and Native Hawaiian Serving Institutions, and Hispanic-Serving Institutions Programs

Purpose: On January 4, 1999, the Department of Education published in the **Federal Register** (64 FR 347–349) a closing date notice for applications from institutions that wish to be designated as an eligible institution under the Strengthening Institutions, American Indian Tribally Controlled Colleges and Universities, Alaska Native and Native Hawaiian Serving Institutions and Hispanic-Serving Institutions (HSI) Programs. The first three programs are authorized under Title III of the Higher Education Act of 1965, as amended (HEA). The HSI program is authorized under Title V of the HEA. The purpose of this notice is to extend the closing date for transmittal of institutional eligibility applications from institutions who wish to compete for new grants under the Strengthening Institutions, American Indian Tribally Controlled Colleges and Universities, Alaska Native and Native Hawaiian Serving Institutions and HSI Programs. This action is needed due to unforeseen administrative delays.

The closing date for eligibility applications is extended from February 15, 1999 to March 17, 1999 for institutions that wish to apply for new grant awards under the Title III and Title V programs. The Department plans to announce a closing date of April 12, 1999 for applications for new grant awards under the Strengthening Institutions, American Indian Tribally Controlled Colleges and Universities, Alaska Native and Native Hawaiian Serving Institutions and HSI Programs, to be published in a future **Federal Register** notice. Because of time constraints, the Department does not guarantee that it will be able to notify an applicant for designation as an eligible Institution before the new grant award closing date of April 12, 1999.

However, the closing date of May 28, 1999 has not changed for applicants who wish to apply only for purposes of obtaining a waiver of certain non-Federal share requirements under the Federal Supplemental Educational Opportunity Grant (FSEOG), Federal Work Study (FWS), and Undergraduate International Studies and Foreign Language (UISFL) programs.

Deadline for Transmittal of Applications: March 17, 1999 for Institutions of higher education that with to compete for new awards under the Strengthening Institutions, American Indian Tribally Controlled Colleges and Universities, Alaska Native and Native Hawaiian Serving Institutions and HSI Programs. May 28, 1999 for institutions of higher education that plan to obtain a waiver of certain non-Federal share requirements under the FSEOG, FWS, and UISFL programs.

Applications Available: February 10, 1999.

For Applications or Information Contact: Ellen M. Sealey, Margaret A. Wheeler or Anne S. Young, Institutional Development and Undergraduate Education Service, U.S. Department of Education, 400 Maryland Avenue, SW., (Portals CY–80) Washington, DC 20202–5335. Telephone (202) 708–8866, 708–9926 and 708–8839. Individuals who use a telecommunications device for the deaf (TDD) may call the Federal Information Relay Service (FIRS) at 1–800–877–8339 between 8 a.m. and 8 p.m., Eastern time, Monday through Friday.

Individuals with disabilities may obtain this document in an alternate format (e.g., Braille, large print, audio tape, or computer diskette) on request to the contact person listed in the preceding paragraph.

Individuals with disabilities may obtain a copy of the application package in an alternate format, also, by contacting that person. However, the Department is not able to reproduce in an alternate format the standard forms included in the application package.

Electronic Access to This Document: Anyone may view this document, as well as all other Department of Education documents published in the **Federal Register**, in text or portable document format (pdf) on the World Wide Web at either of the following sites:

http://ocfo.ed.gov/fedreg/htm
http://www.ed.gov/news.html

To use the pdf you must have the Adobe Acrobat Reader Program with Search, which is available free at either of the previous sites. If you have questions about using the pdf, call the U.S. Government Printing Office at (202) 512–1530 or, toll free at 1–888–293–6498.

Anyone may also view these documents in text copy on an electronic bulletin board of the Department. Telephone: (202) 219–1511 or, toll free, 1–800–222–4922. The documents located under Option G—Files/Announcements, Bulletins, and Press Releases.

Note: The official version of a document is the document published in the **Federal Register**.

Program Authority: 20 U.S.C. 1057, 1059c and 1065a.

Dated: February 2, 1999.

David A. Longanecker,

Assistant Secretary for Postsecondary Education.

[FR Doc. 99–2918 Filed 2–5–99; 8:45 am]

BILLING CODE 4000–01–M

federal register

Monday
February 8, 1999

Part VII

The President

Proclamation 7166—American Heart Month, 1999

Executive Order 13112—Invasive Species

Federal Register
Vol. 64, No. 25
Monday, February 8, 1999

Presidential Documents

Title 3—

The President

Proclamation 7166 of February 3, 1999

American Heart Month, 1999

By the President of the United States of America

A Proclamation

Thanks to the dedicated efforts of scientists and researchers and the strong support of the American public, today we stand at the threshold of a new frontier in the prevention and treatment of heart disease. And in coming years, Americans will reap even greater benefits from our ongoing commitment to heart research.

Already, research has profoundly altered scientists' understanding of heart disease, revealing that the likelihood of heart disease is increased by risk factors such as smoking, high blood pressure, high blood cholesterol, diabetes, obesity, physical inactivity, and a family history of early heart disease. Armed with this knowledge, millions of Americans have been able to take steps to reduce their risk of illness. Thanks to scientific discoveries, those already afflicted with heart disease now have access to lifesaving therapies and procedures such as clot-dissolving drugs, cardiopulmonary resuscitation, defibrillation, and balloon angioplasty.

Even greater advances lie ahead. Fields on the verge of delivering major innovations include molecular genetics, gene therapy, biotechnology, immunology, and epidemiology. The next breakthroughs will include better noninvasive diagnostic tools that can help physicians examine the heart and blood vessels without surgery; an implantable mechanical device that can restore heart function to those suffering heart failure; and a drug that can promote the growth of new blood vessels to body tissues and organs with poor circulation.

But technology is not a panacea. Despite the great gains we have made, heart disease remains the leading cause of death in the United States, and millions of Americans have at least one risk factor for heart disease. Moreover, recent data have shown a slight rise in the death rate for stroke and a slowing in the decline of the death rate for coronary heart disease. Some cardiovascular conditions, such as heart failure, as well as two key heart disease risk factors, obesity and physical inactivity, are on the increase among Americans.

We must work together to make all Americans aware of the information science has given us regarding controllable risk factors for cardiovascular disease. It is particularly important that we reach out to African Americans, Hispanic Americans, other minority communities, and women, who often are at high risk for heart disease and stroke, and ensure that they have access to the resources and information they need to guard against these afflictions. We must also encourage families to teach their children the importance of adopting healthy lifestyle practices early and maintaining them into and throughout adulthood.

The Federal Government continues to play a vital role in improving the cardiovascular health of Americans by supporting research and public education through the National Heart, Lung, and Blood Institute of the National Institutes of Health. The American Heart Association, through its research and education programs and its broad network of dedicated volunteers, also plays a crucial part in bringing about much-needed advances.

As Americans look ahead to a new century and a new millennium, we should use the momentum of past heart research as a springboard to even greater gains. In recognition of the importance of the ongoing fight against cardiovascular disease, the Congress, by Joint Resolution approved December 30, 1963 (77 Stat. 843; 36 U.S.C. 169b), has requested that the President issue an annual proclamation designating February as ''American Heart Month.''

NOW, THEREFORE, I, WILLIAM J. CLINTON, President of the United States of America, do hereby proclaim February 1999 as American Heart Month. I invite the Governors of the States, the Commonwealth of Puerto Rico, officials of other areas subject to the jurisdiction of the United States, and the American people to join me in reaffirming our commitment to combating cardiovascular disease and stroke.

IN WITNESS WHEREOF, I have hereunto set my hand this third day of February, in the year of our Lord nineteen hundred and ninety-nine, and of the Independence of the United States of America the two hundred and twenty-third.

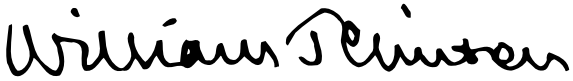

[FR Doc. 99–3183
Filed 2–5–99; 8:45 am]
Billing code 3195–01–P

Presidential Documents

Executive Order 13112 of February 3, 1999

Invasive Species

By the authority vested in me as President by the Constitution and the laws of the United States of America, including the National Environmental Policy Act of 1969, as amended (42 U.S.C. 4321 *et seq.*), Nonindigenous Aquatic Nuisance Prevention and Control Act of 1990, as amended (16 U.S.C. 4701 *et seq.*), Lacey Act, as amended (18 U.S.C. 42), Federal Plant Pest Act (7 U.S.C. 150aa *et seq.*), Federal Noxious Weed Act of 1974, as amended (7 U.S.C. 2801 *et seq.*), Endangered Species Act of 1973, as amended (16 U.S.C. 1531 *et seq.*), and other pertinent statutes, to prevent the introduction of invasive species and provide for their control and to minimize the economic, ecological, and human health impacts that invasive species cause, it is ordered as follows:

Section 1. *Definitions.*

(a) ''Alien species'' means, with respect to a particular ecosystem, any species, including its seeds, eggs, spores, or other biological material capable of propagating that species, that is not native to that ecosystem.

(b) ''Control'' means, as appropriate, eradicating, suppressing, reducing, or managing invasive species populations, preventing spread of invasive species from areas where they are present, and taking steps such as restoration of native species and habitats to reduce the effects of invasive species and to prevent further invasions.

(c) ''Ecosystem'' means the complex of a community of organisms and its environment.

(d) ''Federal agency'' means an executive department or agency, but does not include independent establishments as defined by 5 U.S.C. 104.

(e) ''Introduction'' means the intentional or unintentional escape, release, dissemination, or placement of a species into an ecosystem as a result of human activity.

(f) ''Invasive species'' means an alien species whose introduction does or is likely to cause economic or environmental harm or harm to human health.

(g) ''Native species'' means, with respect to a particular ecosystem, a species that, other than as a result of an introduction, historically occurred or currently occurs in that ecosystem.

(h) ''Species'' means a group of organisms all of which have a high degree of physical and genetic similarity, generally interbreed only among themselves, and show persistent differences from members of allied groups of organisms.

(i) ''Stakeholders'' means, but is not limited to, State, tribal, and local government agencies, academic institutions, the scientific community, non-governmental entities including environmental, agricultural, and conservation organizations, trade groups, commercial interests, and private landowners.

(j) ''United States'' means the 50 States, the District of Columbia, Puerto Rico, Guam, and all possessions, territories, and the territorial sea of the United States.

Sec. 2. *Federal Agency Duties.* (a) Each Federal agency whose actions may affect the status of invasive species shall, to the extent practicable and permitted by law,

(1) identify such actions;

(2) subject to the availability of appropriations, and within Administration budgetary limits, use relevant programs and authorities to: (i) prevent the introduction of invasive species; (ii) detect and respond rapidly to and control populations of such species in a cost-effective and environmentally sound manner; (iii) monitor invasive species populations accurately and reliably; (iv) provide for restoration of native species and habitat conditions in ecosystems that have been invaded; (v) conduct research on invasive species and develop technologies to prevent introduction and provide for environmentally sound control of invasive species; and (vi) promote public education on invasive species and the means to address them; and

(3) not authorize, fund, or carry out actions that it believes are likely to cause or promote the introduction or spread of invasive species in the United States or elsewhere unless, pursuant to guidelines that it has prescribed, the agency has determined and made public its determination that the benefits of such actions clearly outweigh the potential harm caused by invasive species; and that all feasible and prudent measures to minimize risk of harm will be taken in conjunction with the actions.

(b) Federal agencies shall pursue the duties set forth in this section in consultation with the Invasive Species Council, consistent with the Invasive Species Management Plan and in cooperation with stakeholders, as appropriate, and, as approved by the Department of State, when Federal agencies are working with international organizations and foreign nations.

Sec. 3. *Invasive Species Council.* (a) An Invasive Species Council (Council) is hereby established whose members shall include the Secretary of State, the Secretary of the Treasury, the Secretary of Defense, the Secretary of the Interior, the Secretary of Agriculture, the Secretary of Commerce, the Secretary of Transportation, and the Administrator of the Environmental Protection Agency. The Council shall be Co-Chaired by the Secretary of the Interior, the Secretary of Agriculture, and the Secretary of Commerce. The Council may invite additional Federal agency representatives to be members, including representatives from subcabinet bureaus or offices with significant responsibilities concerning invasive species, and may prescribe special procedures for their participation. The Secretary of the Interior shall, with concurrence of the Co-Chairs, appoint an Executive Director of the Council and shall provide the staff and administrative support for the Council.

(b) The Secretary of the Interior shall establish an advisory committee under the Federal Advisory Committee Act, 5 U.S.C. App., to provide information and advice for consideration by the Council, and shall, after consultation with other members of the Council, appoint members of the advisory committee representing stakeholders. Among other things, the advisory committee shall recommend plans and actions at local, tribal, State, regional, and ecosystem-based levels to achieve the goals and objectives of the Management Plan in section 5 of this order. The advisory committee shall act in cooperation with stakeholders and existing organizations addressing invasive species. The Department of the Interior shall provide the administrative and financial support for the advisory committee.

Sec. 4. *Duties of the Invasive Species Council.* The Invasive Species Council shall provide national leadership regarding invasive species, and shall:

(a) oversee the implementation of this order and see that the Federal agency activities concerning invasive species are coordinated, complementary, cost-efficient, and effective, relying to the extent feasible and appropriate on existing organizations addressing invasive species, such as the Aquatic Nuisance Species Task Force, the Federal Interagency Committee for the Management of Noxious and Exotic Weeds, and the Committee on Environment and Natural Resources;

(b) encourage planning and action at local, tribal, State, regional, and ecosystem-based levels to achieve the goals and objectives of the Management Plan in section 5 of this order, in cooperation with stakeholders and existing organizations addressing invasive species;

(c) develop recommendations for international cooperation in addressing invasive species;

(d) develop, in consultation with the Council on Environmental Quality, guidance to Federal agencies pursuant to the National Environmental Policy Act on prevention and control of invasive species, including the procurement, use, and maintenance of native species as they affect invasive species;

(e) facilitate development of a coordinated network among Federal agencies to document, evaluate, and monitor impacts from invasive species on the economy, the environment, and human health;

(f) facilitate establishment of a coordinated, up-to-date information-sharing system that utilizes, to the greatest extent practicable, the Internet; this system shall facilitate access to and exchange of information concerning invasive species, including, but not limited to, information on distribution and abundance of invasive species; life histories of such species and invasive characteristics; economic, environmental, and human health impacts; management techniques, and laws and programs for management, research, and public education; and

(g) prepare and issue a national Invasive Species Management Plan as set forth in section 5 of this order.

Sec. 5. *Invasive Species Management Plan*. (a) Within 18 months after issuance of this order, the Council shall prepare and issue the first edition of a National Invasive Species Management Plan (Management Plan), which shall detail and recommend performance-oriented goals and objectives and specific measures of success for Federal agency efforts concerning invasive species. The Management Plan shall recommend specific objectives and measures for carrying out each of the Federal agency duties established in section 2(a) of this order and shall set forth steps to be taken by the Council to carry out the duties assigned to it under section 4 of this order. The Management Plan shall be developed through a public process and in consultation with Federal agencies and stakeholders.

(b) The first edition of the Management Plan shall include a review of existing and prospective approaches and authorities for preventing the introduction and spread of invasive species, including those for identifying pathways by which invasive species are introduced and for minimizing the risk of introductions via those pathways, and shall identify research needs and recommend measures to minimize the risk that introductions will occur. Such recommended measures shall provide for a science-based process to evaluate risks associated with introduction and spread of invasive species and a coordinated and systematic risk-based process to identify, monitor, and interdict pathways that may be involved in the introduction of invasive species. If recommended measures are not authorized by current law, the Council shall develop and recommend to the President through its Co-Chairs legislative proposals for necessary changes in authority.

(c) The Council shall update the Management Plan biennially and shall concurrently evaluate and report on success in achieving the goals and objectives set forth in the Management Plan. The Management Plan shall identify the personnel, other resources, and additional levels of coordination needed to achieve the Management Plan's identified goals and objectives, and the Council shall provide each edition of the Management Plan and each report on it to the Office of Management and Budget. Within 18 months after measures have been recommended by the Council in any edition of the Management Plan, each Federal agency whose action is required to implement such measures shall either take the action recommended or shall provide the Council with an explanation of why the action is not feasible. The Council shall assess the effectiveness of this order no

less than once each 5 years after the order is issued and shall report to the Office of Management and Budget on whether the order should be revised.

Sec. 6. *Judicial Review and Administration.* (a) This order is intended only to improve the internal management of the executive branch and is not intended to create any right, benefit, or trust responsibility, substantive or procedural, enforceable at law or equity by a party against the United States, its agencies, its officers, or any other person.

(b) Executive Order 11987 of May 24, 1977, is hereby revoked.

(c) The requirements of this order do not affect the obligations of Federal agencies under 16 U.S.C. 4713 with respect to ballast water programs.

(d) The requirements of section 2(a)(3) of this order shall not apply to any action of the Department of State or Department of Defense if the Secretary of State or the Secretary of Defense finds that exemption from such requirements is necessary for foreign policy or national security reasons.

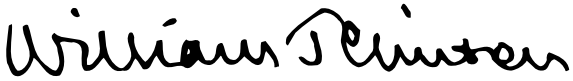

THE WHITE HOUSE,
February 3, 1999.

[FR Doc. 99–3184
Filed 2–5–99; 8:45 am]
Billing code 3195–01–P

Reader Aids

Federal Register

Vol. 64, No. 25

Monday, February 8, 1999

CUSTOMER SERVICE AND INFORMATION

Federal Register/Code of Federal Regulations

General Information, indexes and other finding aids	**202–523–5227**
Laws	**523–5227**
Presidential Documents	
Executive orders and proclamations	**523–5227**
The United States Government Manual	**523–5227**
Other Services	
Electronic and on-line services (voice)	**523–4534**
Privacy Act Compilation	**523–3187**
Public Laws Update Service (numbers, dates, etc.)	**523–6641**
TTY for the deaf-and-hard-of-hearing	**523–5229**

ELECTRONIC RESEARCH

World Wide Web

Full text of the daily Federal Register, CFR and other publications:

http://www.access.gpo.gov/nara

Federal Register information and research tools, including Public Inspection List, indexes, and links to GPO Access:

http://www.nara.gov/fedreg

E-mail

PENS (Public Law Electronic Notification Service) is an E-mail service that delivers information about recently enacted Public Laws. To subscribe, send E-mail to

listproc@lucky.fed.gov

with the text message:

subscribe publaws-l <firstname> <lastname>

Use listproc@lucky.fed.gov only to subscribe or unsubscribe to PENS. We cannot respond to specific inquiries at that address.

Reference questions. Send questions and comments about the Federal Register system to:

info@fedreg.nara.gov

The Federal Register staff cannot interpret specific documents or regulations.

FEDERAL REGISTER PAGES AND DATES, FEBRUARY

4777–4956 1
4957–5148 2
5149–5584 3
5585–5708 4
5709–5926 5
5927–6186 8

CFR PARTS AFFECTED DURING FEBRUARY

At the end of each month, the Office of the Federal Register publishes separately a List of CFR Sections Affected (LSA), which lists parts and sections affected by documents published since the revision date of each title.

3 CFR

Proclamations:
7164 5583
7165 5585
7166 6180
Administrative Orders:
Presidential Determinations:
No. 99-10 of January 25, 1999 5923
Executive Orders:
11987 (Revoked by EO 13112) 6183
13112 6183

5 CFR

2641 5709

7 CFR

301 4777
956 4928
1065 4957

8 CFR

244 4780

10 CFR

Proposed Rules:
35 5721
50 5623

11 CFR

Proposed Rules:
100 5200

12 CFR

701 5927
904 5929
Proposed Rules:
584 5982

13 CFR

Ch. III 5348

14 CFR

25 6120
34 5556
39 ..... 4959, 5093, 5149, 5587, 5588, 5590, 5592, 5710
71 ..... 4782, 4783, 4784, 5150, 5151, 5712, 5930, 6138
91 5152
93 5152
97 ..... 5154, 5594
121 5152
135 5152
Proposed Rules:
39 ..... 4791, 5985
71 ..... 4793, 4794, 4795, 4796, 4797, 4799, 4800, 5093

15 CFR

772 5931
774 5931

17 CFR

232 5865
240 5865
249 5865
270 5156
Proposed Rules:
15 5200
17 5200
275 5722
279 5722

18 CFR

284 5157
Proposed Rules:
37 5206

20 CFR

Proposed Rules:
655 5725
656 5725

21 CFR

5 4964
177 4785
522 5595
556 5158
558 ..... 4965, 5158, 5596
Proposed Rules:
876 5987

22 CFR

Proposed Rules:
50 5725
51 5725

23 CFR

Proposed Rules:
180 5996

24 CFR

990 5570
Proposed Rules:
990 6138

25 CFR

542 4966

26 CFR

1 ..... 5597, 5713
54 5160
301 4967
602 ..... 4967, 5160, 5597, 5713
Proposed Rules:
1 ..... 4801, 5012, 5015
53 5727
54 5237

28 CFR

2 5611

30 CFR

Proposed Rules:
914 6150
935 6005

31 CFR

501 5614

33 CFR

117 ....4786, 4787, 5717
165 5935
Proposed Rules:
100 ....4812, 4814
165 6006
173 4816

36 CFR

Proposed Rules:
1228 4818

40 CFR

51 5188
52 5936
61 5574
63 5189
136 4975
180 5190
Proposed Rules:
52 ....5015, 6008
60 5728
63 5251
83 6008
90 5251
91 5251
262 4818
435 5488
745 5258

41 CFR

101–47 5615

44 CFR

64 4978

45 CFR

1309 5939
Proposed Rules:
1309 6013
1641 5728

46 CFR

1 4981
10 4981

47 CFR

0 ....4984, 5950
2 ....4984, 6138
11 5950
15 4984
25 4984
64 4999
68 4984
73 ....5718, 5719, 5720
76 5950
100 5951
Proposed Rules:
73 ....5623, 5624, 5625, 5626, 5736, 5737, 5738, 5739, 5740, 6020

48 CFR

511 4788
516 4788
542 4788
552 4788
705 5005
706 5005
709 5005
716 5005
722 5005
731 5005
732 5005
745 5005
747 5005
752 5005
1804 5620
1807 5620
1808 5620
1813 5620
1816 5620
1819 5620
1827 5620
1832 5620
1833 5620
1836 5620
1844 5620
1852 5620
1853 5620

49 CFR

23 5096
26 5096
555 5866
581 5866
800 5621
835 5621
1002 5191
1312 5194
Proposed Rules:
192 5018
195 5018
244 4833
261 5996
571 ....4834, 5259, 6021
583 6021
640 5996

50 CFR

17 ....5957, 5963
600 5093
622 5195
648 5196
679 ....4790, 5198, 5720
Proposed Rules:
226 5740
648 5754
679 ....5868, 6025

REMINDERS

The items in this list were editorially compiled as an aid to Federal Register users. Inclusion or exclusion from this list has no legal significance.

RULES GOING INTO EFFECT FEBRUARY 8, 1999

AGRICULTURE DEPARTMENT

Animal and Plant Health Inspection Service

Export certification:
- Non-government facilities; accreditation for laboratory testing or phytosanitary inspection services; published 1-8-99

COMMERCE DEPARTMENT

Export Administration Bureau

Export licensing:
- Commerce control list—
  - Missile technology controls changes; published 2-8-99

ENVIRONMENTAL PROTECTION AGENCY

Air quality implementation plans; approval and promulgation; various States:
- Kentucky; published 12-8-98
- Maryland; published 12-9-98
- Missouri; published 12-8-98
- Rhode Island; published 12-8-98
- Rhode Island; correction; published 1-6-98
- South Carolina; published 12-8-98

Hazardous waste program authorizations:
- Oklahoma; published 12-9-98

Hazardous waste:
- Identification and listing—
  - Petroleum refining process wastes; land disposal restrictions for newly hazardous wastes, etc.; published 8-6-98

FEDERAL COMMUNICATIONS COMMISSION

Organization, functions, and authority delegations:
- General Counsel Office, Competition Division elimination; etc.; published 2-8-99

TRANSPORTATION DEPARTMENT

Federal Aviation Administration

Airworthiness directives:
- Boeing; published 1-4-99
- New Piper Aircraft, Inc.; published 12-31-98
- Raytheon; published 12-31-98

COMMENTS DUE NEXT WEEK

AGRICULTURE DEPARTMENT

Animal and Plant Health Inspection Service

Exportation and importation of animals and animal products:
- African horse sickness; disease status change—
  - Qatar; comments due by 2-16-99; published 1-14-99

Plant-related quarantine, domestic:
- Karnal bunt disease—
  - Compensation; comments due by 2-16-99; published 12-17-98

Plant-related quarantine, foreign:
- Solid wood packing material from China; comments due by 2-16-99; published 12-17-98

AGRICULTURE DEPARTMENT

Rural Utilities Service

Telecommunications standards and specifications:
- Materials, equipment, and construction—
  - Customer access locations; service installation standard; comments due by 2-19-99; published 12-21-98

COMMERCE DEPARTMENT

Economic Analysis Bureau

International services surveys:
- Foreign direct investments in U.S.—
  - Annual survey; exemption levels; comments due by 2-16-99; published 1-14-99

COMMERCE DEPARTMENT

Export Administration Bureau

Encryption items; comments due by 2-16-99; published 12-31-98

COMMERCE DEPARTMENT

National Oceanic and Atmospheric Administration

Fishery conservation and management:
- Alaska; fisheries of Exclusive Economic Zone—
  - Fishing participation credit; comments due by 2-18-99; published 1-19-99
- Caribbean, Gulf, and South Atlantic fisheries—
  - Gulf of Mexico reef fish; comments due by 2-16-99; published 12-18-98

DEFENSE DEPARTMENT

Federal Acquisition Regulation (FAR):
- Historically underutilized business zone (HUBZone) empowerment contracting program; comments due by 2-16-99; published 12-18-98

ENERGY DEPARTMENT

Energy Efficiency and Renewable Energy Office

Consumer products; energy conservation program:
- Clothes washers—
  - Energy conservation standards; comments due by 2-16-99; published 1-11-99

ENVIRONMENTAL PROTECTION AGENCY

Air pollutants, hazardous; national emission standards:
- Oil and natural gas production and natural gas transmission and storage; comments due by 2-16-99; published 1-15-99

Air pollution; standards of performance for new stationary sources:
- Solid waste landfills that commenced construction prior to May 30, 1991 and have not been modified or reconstructed since May 30, 1991; comments due by 2-16-99; published 12-16-98

Air programs:
- Ambient air quality surveillance—
  - Washington and Oregon; ozone monitoring season modification; comments due by 2-19-99; published 1-20-99
  - Washington and Oregon; ozone monitoring season modification; comments due by 2-19-99; published 1-20-99

Air quality implementation plans; approval and promulgation; various States:
- Illinois; comments due by 2-16-99; published 1-15-99
- Louisiana; comments due by 2-16-99; published 1-14-99

Hazardous waste:
- Lead-based paint debris; toxicity characteristic rule; temporary suspension; comments due by 2-16-99; published 12-18-98

Pesticides; tolerances in food, animal feeds, and raw agricultural commodities:
- Bifenthrin; comments due by 2-16-99; published 12-16-98
- Copper ammonium complex; comments due by 2-16-99; published 12-16-98
- Tralkoxydim; comments due by 2-16-99; published 12-16-98

Superfund program:
- National oil and hazardous substances contingency plan—
  - National priorities list update; comments due by 2-16-99; published 12-17-98

Toxic substances:
- Lead-based paint activities—
  - Lead-based paint debris; management and disposal; comments due by 2-16-99; published 12-18-98

FEDERAL COMMUNICATIONS COMMISSION

Common carrier services:
- Fixed satelite service and terrestrial system in Ku-band; comments due by 2-16-99; published 1-12-99

Frequency allocations and radio treaty matters:
- 3650-3700 MHz government transfer band; comments due by 2-16-99; published 1-14-99

Radio and television broadcasting:
- Broadcast and cable equal employment opportunity rules and policies; revision; comments due by 2-18-99; published 1-14-99

FEDERAL EMERGENCY MANAGEMENT AGENCY

Preparedness:
- Offsite radiological emergency preparedness program; services fee; comments due by 2-16-99; published 12-15-98

GENERAL SERVICES ADMINISTRATION

Federal Acquisition Regulation (FAR):
- Historically underutilized business zone (HUBZone) empowerment contracting program; comments due by 2-16-99; published 12-18-98

HEALTH AND HUMAN SERVICES DEPARTMENT

Food and Drug Administration

Food additives:

Adhesive coatings and components—
Silver chloride-coated titanium dioxide; comments due by 2-16-99; published 1-15-99

INTERIOR DEPARTMENT

Reclamation Bureau

Farm operations in excess of 960 acres, information requirements; and formerly excess land eligibility to receive non-full cost irrigation water; comments due by 2-18-99; published 1-19-99

INTERIOR DEPARTMENT

Surface Mining Reclamation and Enforcement Office

Surface coal mining and reclamation operations:
Ownership and control mining operations; definitions, permit requirements, enforcement actions, etc.; comments due by 2-19-99; published 12-21-98

JUSTICE DEPARTMENT

Prisons Bureau

Inmate control, custody, care, etc.:
Sex offender release notification; designation of offenses; comments due by 2-16-99; published 12-16-98

LABOR DEPARTMENT

Employment and Training Administration

Nonimmigrants on H-1B visas employed in specialty occupations and as fashion models; labor condition applications and employer requirements
Wage recordkeeping requirements; comments due by 2-19-99; published 2-5-99

LABOR DEPARTMENT

Mine Safety and Health Administration

Coal mine safety and health:
Underground mines—
Diesel particulate matter; occupational exposure; comments due by 2-16-99; published 10-19-98

NATIONAL AERONAUTICS AND SPACE ADMINISTRATION

Federal Acquisition Regulation (FAR):
Historically underutilized business zone (HUBZone) empowerment contracting program; comments due by 2-16-99; published 12-18-98

SECURITIES AND EXCHANGE COMMISSION

Securities:
Cross-border tender offers, business combinations, and rights offerings; comments due by 2-16-99; published 12-15-98

STATE DEPARTMENT

Privacy Act; implementation; comments due by 2-16-99; published 1-6-99

TRANSPORTATION DEPARTMENT

Coast Guard

Boating safety:
Manufacturing requirements—
Recreational boats; hull identification numbers; comments due by 2-16-99; published 11-16-98

TRANSPORTATION DEPARTMENT

Federal Aviation Administration

Airmen certification:
Aircraft dispatchers; eligibility and certification requirements; comments due by 2-16-99; published 10-19-98

Airworthiness directives:
Airbus; comments due by 2-18-99; published 1-19-99
Construcciones Aeronauticas, S.A.; comments due by 2-19-99; published 1-20-99
McCauley Propeller Systems; comments due by 2-16-99; published 12-18-98
Pratt & Whitney; comments due by 2-19-99; published 12-21-98

Class D and Class E airspace; comments due by 2-16-99; published 1-15-99

Class D and E airspace; comments due by 2-16-99; published 1-5-99

Class E airspace; comments due by 2-17-99; published 1-25-99

TREASURY DEPARTMENT

Internal Revenue Service

Estate and gift taxes:
Marital deduction; valuation of interest in property passing to surviving spouse; public hearing; comments due by 2-16-99; published 12-16-98

CFR CHECKLIST

This checklist, prepared by the Office of the Federal Register, is published weekly. It is arranged in the order of CFR titles, stock numbers, prices, and revision dates.

An asterisk (*) precedes each entry that has been issued since last week and which is now available for sale at the Government Printing Office.

A checklist of current CFR volumes comprising a complete CFR set, also appears in the latest issue of the LSA (List of CFR Sections Affected), which is revised monthly.

The CFR is available free on-line through the Government Printing Office's GPO Access Service at http://www.access.gpo.gov/nara/cfr/index.html. For information about GPO Access call the GPO User Support Team at 1-888-293-6498 (toll free) or 202-512-1530.

The annual rate for subscription to all revised paper volumes is $951.00 domestic, $237.75 additional for foreign mailing.

Mail orders to the Superintendent of Documents, Attn: New Orders, P.O. Box 371954, Pittsburgh, PA 15250–7954. All orders must be accompanied by remittance (check, money order, GPO Deposit Account, VISA, Master Card, or Discover). Charge orders may be telephoned to the GPO Order Desk, Monday through Friday, at **(202) 512–1800** from 8:00 a.m. to 4:00 p.m. eastern time, or FAX your charge orders to **(202) 512-2250**.

Title	Stock Number	Price	Revision Date
1, 2 (2 Reserved)	(869–034–00001–1)	5.00	[5] Jan. 1, 1998
3 (1997 Compilation and Parts 100 and 101)	(869–034–00002–9)	19.00	[1] Jan. 1, 1998
4	(869–034–00003–7)	7.00	[5] Jan. 1, 1998
5 Parts:			
1–699	(869–034–00004–5)	35.00	Jan. 1, 1998
700–1199	(869–034–00005–3)	26.00	Jan. 1, 1998
1200–End, 6 (6 Reserved)	(869–034–00006–1)	39.00	Jan. 1, 1998
7 Parts:			
1–26	(869–034–00007–0)	24.00	Jan. 1, 1998
27–52	(869–034–00008–8)	30.00	Jan. 1, 1998
53–209	(869–034–00009–6)	20.00	Jan. 1, 1998
210–299	(869–034–00010–0)	44.00	Jan. 1, 1998
300–399	(869–034–00011–8)	24.00	Jan. 1, 1998
400–699	(869–034–00012–6)	33.00	Jan. 1, 1998
700–899	(869–034–00013–4)	30.00	Jan. 1, 1998
900–999	(869–034–00014–2)	39.00	Jan. 1, 1998
1000–1199	(869–034–00015–1)	44.00	Jan. 1, 1998
1200–1599	(869–034–00016–9)	34.00	Jan. 1, 1998
1600–1899	(869–034–00017–7)	58.00	Jan. 1, 1998
1900–1939	(869–034–00018–5)	18.00	Jan. 1, 1998
1940–1949	(869–034–00019–3)	33.00	Jan. 1, 1998
1950–1999	(869–034–00020–7)	40.00	Jan. 1, 1998
2000–End	(869–034–00021–5)	24.00	Jan. 1, 1998
8	(869–034–00022–3)	33.00	Jan. 1, 1998
9 Parts:			
1–199	(869–034–00023–1)	40.00	Jan. 1, 1998
200–End	(869–034–00024–0)	33.00	Jan. 1, 1998
10 Parts:			
0–50	(869–034–00025–8)	39.00	Jan. 1, 1998
51–199	(869–034–00026–6)	32.00	Jan. 1, 1998
200–499	(869–034–00027–4)	31.00	Jan. 1, 1998
500–End	(869–034–00028–2)	43.00	Jan. 1, 1998
11	(869–034–00029–1)	19.00	Jan. 1, 1998
12 Parts:			
1–199	(869–034–00030–4)	17.00	Jan. 1, 1998
200–219	(869–034–00031–2)	21.00	Jan. 1, 1998
220–299	(869–034–00032–1)	39.00	Jan. 1, 1998
300–499	(869–034–00033–9)	23.00	Jan. 1, 1998
500–599	(869–034–00034–7)	24.00	Jan. 1, 1998
600–End	(869–034–00035–5)	44.00	Jan. 1, 1998
13	(869–034–00036–3)	23.00	Jan. 1, 1998
14 Parts:			
1–59	(869–034–00037–1)	47.00	Jan. 1, 1998
60–139	(869–034–00038–0)	40.00	Jan. 1, 1998
140–199	(869–034–00039–8)	16.00	Jan. 1, 1998
200–1199	(869–034–00040–1)	29.00	Jan. 1, 1998
1200–End	(869–034–00041–0)	23.00	Jan. 1, 1998
15 Parts:			
0–299	(869–034–00042–8)	22.00	Jan. 1, 1998
300–799	(869–034–00043–6)	33.00	Jan. 1, 1998
800–End	(869–034–00044–4)	23.00	Jan. 1, 1998
16 Parts:			
0–999	(869–034–00045–2)	30.00	Jan. 1, 1998
1000–End	(869–034–00046–1)	33.00	Jan. 1, 1998
17 Parts:			
1–199	(869–034–00048–7)	27.00	Apr. 1, 1998
200–239	(869–034–00049–5)	32.00	Apr. 1, 1998
240–End	(869–034–00050–9)	40.00	Apr. 1, 1998
18 Parts:			
1–399	(869–034–00051–7)	45.00	Apr. 1, 1998
400–End	(869–034–00052–5)	13.00	Apr. 1, 1998
19 Parts:			
1–140	(869–034–00053–3)	34.00	Apr. 1, 1998
141–199	(869–034–00054–1)	33.00	Apr. 1, 1998
200–End	(869–034–00055–0)	15.00	Apr. 1, 1998
20 Parts:			
1–399	(869–034–00056–8)	29.00	Apr. 1, 1998
400–499	(869–034–00057–6)	28.00	Apr. 1, 1998
500–End	(869–034–00058–4)	44.00	Apr. 1, 1998
21 Parts:			
1–99	(869–034–00059–2)	21.00	Apr. 1, 1998
100–169	(869–034–00060–6)	27.00	Apr. 1, 1998
170–199	(869–034–00061–4)	28.00	Apr. 1, 1998
200–299	(869–034–00062–2)	9.00	Apr. 1, 1998
300–499	(869–034–00063–1)	50.00	Apr. 1, 1998
500–599	(869–034–00064–9)	28.00	Apr. 1, 1998
600–799	(869–034–00065–7)	9.00	Apr. 1, 1998
800–1299	(869–034–00066–5)	32.00	Apr. 1, 1998
1300–End	(869–034–00067–3)	12.00	Apr. 1, 1998
22 Parts:			
1–299	(869–034–00068–1)	41.00	Apr. 1, 1998
300–End	(869–034–00069–0)	31.00	Apr. 1, 1998
23	(869–034–00070–3)	25.00	Apr. 1, 1998
24 Parts:			
0–199	(869–034–00071–1)	32.00	Apr. 1, 1998
200–499	(869–034–00072–0)	28.00	Apr. 1, 1998
500–699	(869–034–00073–8)	17.00	Apr. 1, 1998
700–1699	(869–034–00074–6)	45.00	Apr. 1, 1998
1700–End	(869–034–00075–4)	17.00	Apr. 1, 1998
25	(869–034–00076–2)	42.00	Apr. 1, 1998
26 Parts:			
§§ 1.0-1–1.60	(869–034–00077–1)	26.00	Apr. 1, 1998
§§ 1.61–1.169	(869–034–00078–9)	48.00	Apr. 1, 1998
§§ 1.170–1.300	(869–034–00079–7)	31.00	Apr. 1, 1998
§§ 1.301–1.400	(869–034–00080–1)	23.00	Apr. 1, 1998
§§ 1.401–1.440	(869–034–00081–9)	39.00	Apr. 1, 1998
§§ 1.441-1.500	(869-034-00082-7)	29.00	Apr. 1, 1998
§§ 1.501–1.640	(869–034–00083–5)	27.00	Apr. 1, 1998
§§ 1.641–1.850	(869–034–00084–3)	32.00	Apr. 1, 1998
§§ 1.851–1.907	(869–034–00085–1)	36.00	Apr. 1, 1998
§§ 1.908–1.1000	(869–034–00086–0)	35.00	Apr. 1, 1998
§§ 1.1001–1.1400	(869–034–00087–8)	38.00	Apr. 1, 1998
§§ 1.1401–End	(869–034–00088–6)	51.00	Apr. 1, 1998
2–29	(869–034–00089–4)	36.00	Apr. 1, 1998
30–39	(869–034–00090–8)	25.00	Apr. 1, 1998
40–49	(869–034–00091–6)	16.00	Apr. 1, 1998
50–299	(869–034–00092–4)	19.00	Apr. 1, 1998
300–499	(869–034–00093–2)	34.00	Apr. 1, 1998
500–599	(869–034–00094–1)	10.00	Apr. 1, 1998
600–End	(869–034–00095–9)	9.00	Apr. 1, 1998
27 Parts:			
1–199	(869–034–00096–7)	49.00	Apr. 1, 1998

Title	Stock Number	Price	Revision Date
200–End	(869–034–00097–5)	17.00	[6] Apr. 1, 1998
28 Parts:			
0-42	(869–034–00098–3)	36.00	July 1, 1998
43-end	(869-034-00099-1)	30.00	July 1, 1998
29 Parts:			
0–99	(869–034–00100–9)	26.00	July 1, 1998
100–499	(869–034–00101–7)	12.00	July 1, 1998
500–899	(869–034–00102–5)	40.00	July 1, 1998
900–1899	(869–034–00103–3)	20.00	July 1, 1998
1900–1910 (§§ 1900 to 1910.999)	(869–034–00104–1)	44.00	July 1, 1998
1910 (§§ 1910.1000 to end)	(869–034–00105–0)	27.00	July 1, 1998
1911–1925	(869–034–00106–8)	17.00	July 1, 1998
1926	(869–034–00107–6)	30.00	July 1, 1998
1927–End	(869–034–00108–4)	41.00	July 1, 1998
30 Parts:			
1–199	(869–034–00109–2)	33.00	July 1, 1998
200–699	(869–034–00110–6)	29.00	July 1, 1998
700–End	(869–034–00111–4)	33.00	July 1, 1998
31 Parts:			
0–199	(869–034–00112–2)	20.00	July 1, 1998
200–End	(869–034–00113–1)	46.00	July 1, 1998
32 Parts:			
1–39, Vol. I		15.00	[2] July 1, 1984
1–39, Vol. II		19.00	[2] July 1, 1984
1–39, Vol. III		18.00	[2] July 1, 1984
1–190	(869–034–00114–9)	47.00	July 1, 1998
191–399	(869–034–00115–7)	51.00	July 1, 1998
400–629	(869–034–00116–5)	33.00	July 1, 1998
630–699	(869–034–00117–3)	22.00	[4] July 1, 1998
700–799	(869–034–00118–1)	26.00	July 1, 1998
800–End	(869–034–00119–0)	27.00	July 1, 1998
33 Parts:			
1–124	(869–034–00120–3)	29.00	July 1, 1998
125–199	(869–034–00121–1)	38.00	July 1, 1998
200–End	(869–034–00122–0)	30.00	July 1, 1998
34 Parts:			
1–299	(869–034–00123–8)	27.00	July 1, 1998
300–399	(869–034–00124–6)	25.00	July 1, 1998
400–End	(869–034–00125–4)	44.00	July 1, 1998
35	(869–034–00126–2)	14.00	July 1, 1998
36 Parts			
1–199	(869–034–00127–1)	20.00	July 1, 1998
200–299	(869–034–00128–9)	21.00	July 1, 1998
300–End	(869–034–00129–7)	35.00	July 1, 1998
37	(869–034–00130–1)	27.00	July 1, 1998
38 Parts:			
0–17	(869–034–00131–9)	34.00	July 1, 1998
18–End	(869–034–00132–7)	39.00	July 1, 1998
39	(869–034–00133–5)	23.00	July 1, 1998
40 Parts:			
1–49	(869–034–00134–3)	31.00	July 1, 1998
50–51	(869–034–00135–1)	24.00	July 1, 1998
52 (52.01–52.1018)	(869–034–00136–0)	28.00	July 1, 1998
52 (52.1019–End)	(869–034–00137–8)	33.00	July 1, 1998
53–59	(869–034–00138–6)	17.00	July 1, 1998
60	(869–034–00139–4)	53.00	July 1, 1998
61–62	(869–034–00140–8)	18.00	July 1, 1998
63	(869–034–00141–6)	57.00	July 1, 1998
64–71	(869–034–00142–4)	11.00	July 1, 1998
72–80	(869–034–00143–2)	36.00	July 1, 1998
81–85	(869–034–00144–1)	31.00	July 1, 1998
86	(869–034–00144–9)	53.00	July 1, 1998
87-135	(869–034–00146–7)	47.00	July 1, 1998
136–149	(869–034–00147–5)	37.00	July 1, 1998
150–189	(869–034–00148–3)	34.00	July 1, 1998
190–259	(869–034–00149–1)	23.00	July 1, 1998
260–265	(869–034–00150–9)	29.00	July 1, 1998
266–299	(869–034–00151–3)	33.00	July 1, 1998
300–399	(869–034–00152–1)	26.00	July 1, 1998
400–424	(869–034–00153–0)	33.00	July 1, 1998
425–699	(869–034–00154–8)	42.00	July 1, 1998
700–789	(869–034–00155–6)	41.00	July 1, 1998
790–End	(869–034–00156–4)	22.00	July 1, 1998
41 Chapters:			
1, 1–1 to 1–10		13.00	[3] July 1, 1984
1, 1–11 to Appendix, 2 (2 Reserved)		13.00	[3] July 1, 1984
3–6		14.00	[3] July 1, 1984
7		6.00	[3] July 1, 1984
8		4.50	[3] July 1, 1984
9		13.00	[3] July 1, 1984
10–17		9.50	[3] July 1, 1984
18, Vol. I, Parts 1–5		13.00	[3] July 1, 1984
18, Vol. II, Parts 6–19		13.00	[3] July 1, 1984
18, Vol. III, Parts 20–52		13.00	[3] July 1, 1984
19–100		13.00	[3] July 1, 1984
1–100	(869–034–00157–2)	13.00	July 1, 1998
101	(869–034–00158–1)	37.00	July 1, 1998
102–200	(869–034–00158–9)	15.00	July 1, 1998
201–End	(869–034–00160–2)	13.00	July 1, 1998
42 Parts:			
1–399	(869–034–00161–1)	34.00	Oct. 1, 1998
*400–429	(869–034–00162–9)	41.00	Oct. 1, 1998
430–End	(869–034–00163–7)	51.00	Oct. 1, 1998
43 Parts:			
1–999	(869–032–00163–4)	31.00	Oct. 1, 1997
1000–end	(869–032–00164–2)	50.00	Oct. 1, 1997
44	(869–032–00165–1)	31.00	Oct. 1, 1997
45 Parts:			
1–199	(869–032–00166–9)	30.00	Oct. 1, 1997
200–499	(869–032–00167–7)	18.00	Oct. 1, 1997
500–1199	(869–032–00168–5)	29.00	Oct. 1, 1997
1200–End	(869–034–00170–0)	39.00	Oct. 1, 1998
46 Parts:			
1–40	(869–034–00171–8)	26.00	Oct. 1, 1998
41–69	(869–034–00172–6)	21.00	Oct. 1, 1998
70–89	(869–034–00173–4)	8.00	Oct. 1, 1998
90–139	(869–034–00174–2)	26.00	Oct. 1, 1998
140–155	(869–032–00174–0)	15.00	Oct. 1, 1997
156–165	(869–032–00175–8)	20.00	Oct. 1, 1997
166–199	(869–032–00176–6)	26.00	Oct. 1, 1997
200–499	(869–034–00178–5)	22.00	Oct. 1, 1998
500–End	(869–034–00179–3)	16.00	Oct. 1, 1998
47 Parts:			
0–19	(869–034–00180–7)	36.00	Oct. 1, 1998
20–39	(869–034–00181–5)	27.00	Oct. 1, 1998
40–69	(869–032–00181–2)	23.00	Oct. 1, 1997
70–79	(869–032–00182–1)	33.00	Oct. 1, 1997
*80–End	(869–034–00184–0)	40.00	Oct. 1, 1998
48 Chapters:			
1 (Parts 1–51)	(869–034–00185–8)	51.00	Oct. 1, 1998
1 (Parts 52–99)	(869–034–00186–6)	29.00	Oct. 1, 1998
2 (Parts 201–299)	(869–032–00186–3)	35.00	Oct. 1, 1997
3–6	(869–034–00188–2)	29.00	Oct. 1, 1998
7–14	(869–034–00189–1)	32.00	Oct. 1, 1998
15–28	(869–032–00189–8)	33.00	Oct. 1, 1997
*29–End	(869–034–00191–2)	24.00	Oct. 1, 1998
49 Parts:			
1–99	(869–034–00192–1)	31.00	Oct. 1, 1998
100–185	(869–032–00192–8)	50.00	Oct. 1, 1997
*186–199	(869–034–00194–7)	11.00	Oct. 1, 1998
200–399	(869–032–00194–4)	43.00	Oct. 1, 1997
400–999	(869–032–00195–2)	49.00	Oct. 1, 1997
1000–1199	(869–034–00197–1)	17.00	Oct. 1, 1998
1200–End	(869–032–00197–9)	14.00	Oct. 1, 1997
50 Parts:			
1–199	(869–032–00198–7)	41.00	Oct. 1, 1997
200–599	(869–034–00200–5)	22.00	Oct. 1, 1998
600–End	(869–032–00200–2)	29.00	Oct. 1, 1997

Title	Stock Number	Price	Revision Date
CFR Index and Findings Aids	(869–034–00049–6)	46.00	Jan. 1, 1998
Complete 1998 CFR set		951.00	1998
Microfiche CFR Edition:			
Subscription (mailed as issued)		247.00	1998
Individual copies		1.00	1998
Complete set (one-time mailing)		247.00	1997
Complete set (one-time mailing)		264.00	1996

[1] Because Title 3 is an annual compilation, this volume and all previous volumes should be retained as a permanent reference source.

[2] The July 1, 1985 edition of 32 CFR Parts 1–189 contains a note only for Parts 1–39 inclusive. For the full text of the Defense Acquisition Regulations in Parts 1–39, consult the three CFR volumes issued as of July 1, 1984, containing those parts.

[3] The July 1, 1985 edition of 41 CFR Chapters 1–100 contains a note only for Chapters 1 to 49 inclusive. For the full text of procurement regulations in Chapters 1 to 49, consult the eleven CFR volumes issued as of July 1, 1984 containing those chapters.

[4] No amendments to this volume were promulgated during the period July 1, 1997 to June 30, 1998. The volume issued July 1, 1997, should be retained.

[5] No amendments to this volume were promulgated during the period January 1, 1997 through December 31, 1997. The CFR volume issued as of January 1, 1997 should be retained.

[6] No amendments to this volume were promulgated during the period April 1, 1997, through April 1, 1998. The CFR volume issued as of April 1, 1997, should be retained.