DEPARTMENT OF TRANSPORTATION

National Highway Traffic Safety Administration

49 CFR Parts 571 and 596

[Docket No. 98–3390, Notice 2]

RIN 2127–AG50

Federal Motor Vehicle Safety Standards; Child Restraint Systems; Child Restraint Anchorage Systems

AGENCY: National Highway Traffic Safety Administration (NHTSA), Department of Transportation.

ACTION: Final rule.

SUMMARY: This final rule establishes a new Federal motor vehicle safety standard that requires motor vehicle manufacturers to provide motorists with a new way of installing child restraints. In the future, vehicles will be equipped with child restraint anchorage systems that are standardized and independent of the vehicle seat belts.

The new independent system will have two lower anchorages, and one upper anchorage. Each lower anchorage will include a rigid round rod or ''bar'' unto which a hook, a jaw-like buckle or other connector can be snapped. The bars will be located at the intersection of the vehicle seat cushion and seat back. The upper anchorage will be a ring-like object to which the upper tether of a child restraint system can be attached. The new independent anchorage system will be required to be installed at two rear seating positions. In addition, a tether anchorage will be required at a third position. This final rule also amends the child restraint standard to require child restraints to be equipped with means for attaching to the new independent anchorage system.

This final rule is being issued because the full effectiveness of child restraint systems is not being realized. The reasons for this include design features affecting the compatibility of child restraints and both vehicle seats and vehicle seat belt systems. By requiring an easy-to-use anchorage system that is independent of the vehicle seat belts, this final rule makes possible more effective child restraint installation and will thereby increase child restraint effectiveness and child safety.

Issuance of this rule makes the United States the first country to adopt requirements for a complete universal anchorage system. To the extent consistent with safety, NHTSA has sought to harmonize its rule with requirements being considered by standard bodies and regulatory authorities in Europe and elsewhere. The agency has harmonized with anticipated Economic Commission for Europe and Canadian regulations by requiring that bars be used as the lower anchorages for installing child restraints. The agency has also harmonized with Canadian and Australian regulations by expressly requiring tether anchorages in vehicles and indirectly requiring tethers on most child restraints.

For the convenience of the traveling public, DOT wants child restraints complying with this final rule to be usable in both aircraft and motor vehicles to the extent practicable. To that end, the agency is developing a proposal to ensure that the new child restraints are not designed in a way that might make them unsuitable for aircraft use. NHTSA expects to issue the proposal next spring.

DATES: The amendments made in this rule are effective September 1, 1999.

The incorporation by reference of the material listed in this document is approved by the Director of the Federal Register as of September 1, 1999.

Petitions for reconsideration of the rule must be received by April 19, 1999.

ADDRESSES: Petitions for reconsideration should refer to the docket number of this document and be submitted to: Administrator, Room 5220, National Highway Traffic Safety Administration, 400 Seventh Street S.W., Washington, D.C., 20590.

FOR FURTHER INFORMATION CONTACT: For nonlegal issues: George Mouchahoir, PhD. (202–366–4919), Office of Crashworthiness Standards, NHTSA.

For legal issues: Deirdre R. Fujita, Office of the Chief Counsel (202–366–2992), NHTSA.

Both of the above persons can be reached at the National Highway Traffic Safety Administration, 400 Seventh St., S.W., Washington, D.C., 20590.

SUPPLEMENTARY INFORMATION:

Table of Contents

I. Executive Summary of this Final Rule
- a. Final rule
- b. Why NHTSA is issuing this rule: the underlying issue, and how this rule addresses it
- c. How and why this final rule differs from the agency's NPRM: particularly, why NHTSA selected the ISO rigid bar anchorage system, instead of the flexible latchplate anchorage system
- d. Future proposal to promote the usability of the new child restraints in both aircraft and motor vehicles

II. Safety Issue
- a. Why is something being done to improve child restraint safety? Aren't child restraints highly effective already?
- b. Factors affecting child restraint effectiveness

III. Summary of the NPRM
- a. What NHTSA proposed to address the issue; preference for flexible latchplate anchorage system over the rigid bar anchorage system
- b. Proposed leadtime
- c. NPRM's estimated benefits and costs of the rulemaking
- d. Alternatives considered

IV. Summary of the Comments
- a. Commenters supporting flexible latchplate anchorage system
- b. Commenters supporting rigid bar anchorage system

V. Summary of Post-Comment Period Events and Docket Submissions
- a. ISO working group refines and completes draft ISO standard on rigid bar anchorage system
- b. Child restraint manufacturers shift support to rigid bar anchorage system
- c. Industry conducts consumer focus group testing on which lower anchorage system is preferred
- d. Canada issues rule on tether anchorages

VI. Agency Decision Regarding Final Rule
- a. Summary of the final rule
- b. Summary of key differences between NPRM and final rule

VII. Issue-by-Issue Discussion of the Agency Decision on Content of Final Rule
- a. NHTSA determines the anchorage systems are essentially equal on the merits
- b. There is substantial consumer interest in both anchorage systems
- c. NHTSA determines only one lower anchorage system can be selected
- d. NHTSA selects the rigid bar anchorage system based on its advantages over the flexible latchplate anchorage system
  - 1. The first advantage is harmonization of standards
  - 2. The second advantage is enhanced design flexibility which provides a reasonably predictable prospect for design improvements that will enhance either safety or public acceptability or both
  - 3. The third advantage is possible safety benefits
- e. NHTSA's final rule is not identical to the draft ISO standard
  - 1. Bars may not be attached to the vehicle by webbing materials
  - 2. The bars must be visible or the vehicle seat back marked to assist consumers in locating them
  - 3. A tether anchorage is not required by the draft ISO standard, but is required by this final rule
- f. The types of vehicles that are subject to the adopted requirements
- g. The number of anchorage systems that are required in each vehicle
- h. Lockability requirement will be retained until 2012
- i. Strength requirements for lower rigid bars of child restraint anchorage system and compliance test procedures
- j. Requirements for child restraints
- k. Performance and testing requirements for tether anchorages
- l. Leadtime and phasing-in the requirements

1. Tether anchorage and tether strap
2. Lower anchorage bars and means for attaching child restraints to those bars
3. Requirement to identify vehicles certified to the vehicle requirements during the phase-in
VIII. Rulemaking Analyses and Notices
a. Executive Order 12866 (Federal Regulation) and DOT Regulatory Policies and Procedures
b. Regulatory Flexibility Act
c. Executive Order 12612
d. Unfunded Mandates Reform Act
e. National Technology Transfer and Advancement Act
f. National Environmental Policy Act
g. Executive Order 12778 (Civil Justice Reform)
h. Paperwork Reduction Act

I. Executive Summary of This Final Rule

a. Final Rule

Child restraint systems are highly effective in reducing the likelihood of death or serious injury in motor vehicle crashes. The agency estimates that child restraints are potentially 71 percent effective in reducing the likelihood of death.[1] However, the extent to which this level of effectiveness is achieved in actual use depends upon a number of factors, including how well motorists are able to adapt the vehicle seat belts for the installation of the child restraints, and upon the compatibility between child restraints and vehicle seats and seat belts. As a result of improper installation of children in child restraints and child restraints in vehicles, the actual average effectiveness for all child restraints in use in preventing fatalities is 59 percent.[2]

This final rule will improve the actual average effectiveness of child restraint systems by improving the compatibility of child restraints and vehicles and making them easier to install. This rule requires that motor vehicles be equipped with a easy-to-use anchorage system designed to be used exclusively for securing child restraints. Each vehicle anchorage system will consist of an upper anchorage point and two lower anchorage points. Each lower anchorage includes a 6 millimeter (mm) (0.24 inches (in.)) diameter straight rod, or ''bar,'' that is attached to the vehicle and is lateral and horizontal in direction. The bars are located near the intersection of the seat cushion and seat back in a position where they will not be felt by seated occupants. The upper anchorage is a user-ready component for attaching the top tether of a child restraint. This preamble refers to this system as the ''rigid bar anchorage system,'' in reference to the 6 mm diameter bars, which are rigidly mounted to the vehicle.

Each vehicle must have at least two vehicle anchorage systems rearward of the front seat. However, if a vehicle has a rear seat with insufficient space to accommodate a rear facing infant seat, and is equipped with, as original equipment (OE), an air bag cutoff switch that deactivates the air bag for the front passenger position, one anchorage system must be provided in that position, and another in a rear seating position to accommodate a forward-facing child restraint.[3] If a vehicle has no rear seat, and is equipped with an OE air bag cutoff switch that deactivates the air bag for the front passenger position, one anchorage system must be provided in that position.

Each vehicle with at least three rear designated seating positions must also have a third rear designated seating position equipped with a user-ready tether anchorage. The third tether anchorage provides parents an improved means of attaching the new child restraints at a third rear seating position. In a typical family car with three rear seating positions, the third tether anchorage would likely be at the center rear seating position, which is a seating position that many parents prefer placing their child. A full child restraint anchorage system (consisting of the two rigid bars for the lower anchorages and a top tether anchorage) is not required to be installed in the center rear seating position because it may be difficult to fit the lower anchorages of two child restraint anchorage systems, or two child restraint systems, adjacent to each other in the rear seat of small vehicles. Further, a lap belt at the center rear seating position, together with a tether anchorage at that position, should perform essentially as well as a full child restraint anchorage system. For these reasons, and to minimize the cost of facilitating the use of the new child restraints in the third position, the agency is requiring two, and not three, child restraint anchorage systems.

Each child restraint will have components, such as hooks or buckles, that are designed to clasp to the two lower rigid bars of a vehicle's rigid bar anchorage system. Although the final rule does not expressly require child restraints to have top tethers, it establishes stricter limits on the distance that the head of a dummy seated in a child restraint may move forward during a test simulating a frontal vehicle crash (head excursion limit). Almost all child restraint models will likely be equipped with a top tether in order to comply with the new head excursion limit.

Each child restraint will also have to continue to be capable of being attached to a vehicle by way of the vehicle's belt system. This way, child restraints that have the new components can still be used on older model vehicles that do not have a child restraint anchorage system. Child restraints with the new components can also still be used on aircraft, using the aircraft belt system to attach to the aircraft seat. Older model child restraints that do not have the new components attaching to the child restraint anchorage system can use vehicle belts, as child restraints do now, to attach to new vehicle seats that have a child restraint anchorage system.

The requirements adopted today reflect a worldwide effort to improve the installation of child restraints in motor vehicles. This final rule uses the technical specifications set forth in a draft standard being developed by a working group to the International Organization for Standardization (ISO), a worldwide voluntary federation of ISO member bodies. NHTSA anticipates that the ISO, which began work on an independent child restraint anchorage system in the early 1990's, will be adopting the draft standard as a final standard within the next year. Incorporation of the ISO standard into the regulations of the European community is likely to follow. Canada and Australia have also indicated their intent to undertake regulatory action aimed at requiring the rigid bar anchorage system to improve child restraint attachment for their countries' children.

NHTSA is issuing this final rule at this date, prior to the ISO's completion of work on the draft standard, in order to provide increased safety to this country's children as quickly as possible. Further, the agency anticipates that the ISO and the working group will not make significant changes to the draft ISO standard. To the extent that the final ISO standard differs from this final rule, the agency will evaluate those differences to determine if changes to this final rule appear warranted. In the event NHTSA tentatively determines

[1] Kahane, Charles J. (1986), *An Evaluation of the Effectiveness and Benefits of Safety Seats,* U.S. Department of Transportation, National Highway Traffic Safety Administration, DOT HS 806 889, p. 305. The agency believes that this figure remains valid.

[2] Hertz, Ellen (1996), Research Note, ''Revised Estimates of Child Restraint Effectiveness,'' U.S. Department of Transportation, National Highway Traffic Safety Administration.

[3] The anchorage for a front seat tether could be attached any one of three places: the ceiling; the floor pan right behind the front seat; or to the back of the lower part of the seat structure.

that changes may be warranted, the agency will commence a rulemaking proceeding and make a decision as to the issuance of an amendment based on all available information developed in the course of that proceeding, in accordance with statutory criteria.

b. Why NHTSA Is Issuing This Rule: The Underlying Issue, and How This Rule Corrects It

This rule makes it easier to install child restraints by eliminating the current dependence of motorists on vehicle seat belts as the means of installing child restraints in vehicles. The primary purpose of seat belts has always been to protect older children, teenagers and adults from serious injury in vehicle crashes. A secondary purpose of seat belts has been to install child restraints in vehicles.

Attempting to design seat belts to achieve the first purpose (restraining older children, teenagers and adults) has sometimes led to design choices that may have made it more difficult for the belts to achieve the second purpose (tightly securing a child restraint). One design change is the replacement of simple lap belts with integrated lap/shoulder belts in the back seats of vehicles. Another change is the positioning of some seat belt anchorages several inches forward of the seat back to better position the lap belt low on the pelvis of these occupants. While these and other design changes have increased the ability of vehicle belt systems to restrain occupants, they have made it harder for motorists to use the belts on some vehicles for installing child restraints.

By requiring motor vehicles to be equipped with standardized anchorages designed exclusively for the purpose of securing child restraints, this final rule will help vehicle and seat belt manufacturers design belts to more effectively perform a dual role. Manufacturers will be able to optimize seat belts to restrain older children, teenagers and adults. Further, the final rule will provide motorists with a means of securing child restraints that is easier and more effective.

By requiring an independent child restraint anchorage system, the final rule improves the compatibility of vehicle seats and child restraints and the compatibility of seat belts and child restraints. Installation of the new system will result in more child restraints being correctly installed. The standardized vehicle anchorages and the means of attachment on child restraints are intuitive and easy-to-use. For example, they eliminate the need to route the vehicle belt through or around the child restraint. By making child restraints easier to install, correct use and effectiveness will be increased.

The requirement for top tether anchorages in vehicles will be implemented before the requirement for the lower vehicle anchorages since less leadtime is needed for the installation of the tether anchorages. In those vehicles equipped with tether anchorages but not lower anchorages, owners can install a child restraint complying with this rule by attaching the tether and using the vehicle seat belts to secure the lower part of the child restraint. Tether anchorages will be required in the vast majority of passenger cars beginning September 1, 1999[4], and in all light trucks, buses and multipurpose passenger vehicles beginning September 1, 2000. To provide consumers with the standardized lower anchorages in vehicles as quickly as possible, this rule specifies a three year phase-in that begins September 1, 2000. Beginning on that date, this rule requires vehicle manufacturers to begin installing the new lower anchorages in new passenger cars, in trucks and multipurpose passenger vehicles with a gross vehicle weight rating (GVWR) of 3,856 kilograms (kg) (8,500 lb) or less, and in buses with a GVWR of 4,536 kg (10,000 lb) or less (including school buses in that GVWR category). Beginning on September 1, 2002, the new lower anchorages will be required in all new vehicles in those categories.

The requirement (the stricter head excursion limit) that will cause top tethers to be installed on most child restraint systems will be effective September 1, 1999. The requirement for child restraints to be equipped with means for attaching to the lower anchorages will be effective September 1, 2002. NHTSA believes that the latter requirement should not be phased-in. Child restraint manufacturers have informed the agency that a phase-in would not be successful because they do not have the same type of control over the distribution of their products that vehicle manufacturers have. According to the child restraint manufacturers, if they were to produce both current child restraint systems as well as child restraints with the new attachments, distributors and retailers of their products would order mainly the current child restraints to sell, which do not have the new attachments, and not the new restraints because the current systems would cost less than the new child restraint systems. Further, NHTSA has decided against requiring all new child restraints to have the new attachments earlier than the date on which vehicles will be equipped with the lower anchorage system because new vehicles equipped with the new attachment system will be a small proportion of the total vehicle fleet during the phase-in period. Nevertheless, the agency anticipates that some child restraint manufacturers will begin offering new designs during the phase-in period, to meet a market demand for the products.

c. How and Why This Final Rule Differs From the Agency's NPRM: Particularly, Why NHTSA Selected The ISO Rigid Bar Anchorage System, Instead of the Flexible Latchplate Anchorage System

Today's final rule adopts the key aspect of the proposal. As in the proposal, this rule requires vehicles to be equipped with an independent anchorage system for attaching child restraints. An independent system is strongly preferred by consumers over current seat belts as the means of attaching child restraint systems. The independent system uses three attachment points for securing a child restraint to a vehicle seat (the two lower anchorages and the top tether). The two lower points are at or near the intersection of the vehicle seat cushion and seat back.

However, this final rule differs from the proposed system in several important respects. The agency proposed to permit either of two lower anchorage systems for vehicles: (1) the rigid bar anchorage system adopted in this final rule; or (2) a buckle and flexible latchplate system known as ''the uniform child restraint anchorage system'' (''UCRA'' system). The buckle and latchplate of the second system are similar to what is used for adult seat belts in vehicles. The two lower anchorages consist of small latchplates, attached to flexible webbing, near the intersection of the vehicle seat cushion and seat back. (In reference to the latchplates and to the flexibility of the webbing, hereinafter this preamble refers to the UCRA system as the ''flexible latchplate system.'' This is to provide a more descriptive term for the system than ''UCRA,'' for the reader's convenience.) Buckles designed to attach to the latchplates are attached to the child restraint by belt webbing.

Both systems would have been permitted under the NPRM because each had its advantages. At the time of the proposal, information available to NHTSA indicated that the installation of

[4] The requirement will be phased in, with 80 percent of a vehicle manufacturer's passenger car fleet required to have user-ready tether anchorages by September 1, 1999, and the remaining 20 percent required to comply September 1 of the following year.

the flexible latchplate system, instead of the rigid bar anchorage system, in motor vehicles would result in less added cost and weight for child restraints. This information was contained in a study performed by a contractor for NHTSA. At the time of that study, the then-existing prototypes of child restraints made to connect with the rigid bar anchorage system were significantly different from current prototypes. The then-existing prototypes typically had rigid prongs, or runners, for attaching the child restraints to the rigid bars and a substantial (and therefore heavy) supporting structure for the runners. Based on that information from the study, the agency's cost analysis indicated that the buckles of the flexible latchplate system (which were attached to the child restraint by means of webbing) would add an estimated $14 to the cost of a child restraint, while the rigid prongs (attached by means of a heavy base) would add $60 to $100 to the cost of a child restraint.

Although the two systems appeared to have similar safety benefits, the lower anchorage of the flexible latchplate system appeared to necessitate making less costly changes to child restraints than the rigid bar anchorage system. Accordingly, the agency gave preference to the flexible latchplate system in its proposal. It did this by proposing to require that all child restraints have the buckles for attaching to the flexible latchplate system. The rigid bar anchorage system could have been provided only if the vehicle manufacturer also provided an adapter that would connect at one end to the rigid bar and at the other end to the buckles on the child restraint.

The agency has decided to require the installation of rigid bar anchorage systems in motor vehicles instead of permitting either those systems or flexible latchplate anchorage systems. Commenters urged NHTSA to mandate a single system because of their opposition to an adapter. They believed that an adapter would be lost or misused by consumers, resulting in buckle-equipped child restraints unable to use or improperly using a rigid bar anchorage system in the vehicle. Further, the agency notes that mandating a single system standardizes the anchorage system and thereby promotes consumer understanding of and familiarity with the system.

In deciding which system to select, NHTSA noted that the rigid bar anchorage system and the flexible latchplate system appear to be roughly equally acceptable to the public. ISO-reported consumer clinics that were conducted overseas and in Canada indicated comparable levels of consumer acceptance for the two systems. In the most recent consumer preference clinic, which was sponsored by U.S. and foreign vehicle manufacturers, child restraint designs that were compatible with the rigid bar anchorage system and with the flexible latchplate system were strongly preferred over current child restraints designs that use vehicle seat belts to attach to the vehicle. While consumers scored the child restraint design that had the buckles highest, the three systems that had the rigid bar anchorage-type of child restraints were, in aggregate, the first choice of a large number of participants. This does not mean that the consumers selected the rigid bar over the flexible latchplate as their preferred *vehicle* system. However, it does appear to indicate that the design flexibility of the rigid bar system accommodated a variety of child restraint attachment options that, in aggregate, resulted in more ''first place'' finishes than the flexible latchplate design.

The agency also noted that when the flexible latchplate lower anchorage system is compared to new prototypes of child restraints designed to attach to rigid anchorages, the flexible latchplate system loses much or all of the cost and weight advantage it was thought to have at the time of the NPRM. After the NPRM was published, a number of child restraint and vehicle manufacturers determined that child restraints need not have rigid runners to attach to the rigid bar anchorage system. They told the agency that hooks and other devices were viable alternatives to rigid runners, and would be used by most child restraint manufacturers if the rigid bar anchorage system were adopted. They said that the hooks and other alternative connectors could be attached to the child restraint with belt webbing, in the same way the buckles for the flexible latchplates can be attached to the child restraint. New analysis by the agency indicates that these alternative rigid bar anchorage connectors would cost about the same or less than the flexible latchplate buckles, and would not add substantial bulk or weight to child restraints.

The rigid bar anchorage system currently has fairly wide support among both vehicle and child restraint manufacturers. In June 1996, the flexible latchplate anchorage system was supported by a wide variety of vehicle manufacturers (virtually all domestic and foreign vehicle manufacturers except for European manufacturers) and child restraint manufacturers. Now, however, the only major vehicle manufacturer on record with this agency as expressly favoring the flexible latchplate anchorage system is General Motors. The shift to the rigid bar anchorage system began shortly before publication of the NPRM. At that time, Ford and Chrysler announced that they had changed their support to the rigid bar anchorage system. Recently, Toyota expressed support for the rigid bar anchorage system. In addition, most child restraint manufacturers now support the rigid bar anchorage system.

Manufacturers cited the potential advantages of the rigid bar anchorage system over the flexible latchplate system. They believe that the rigid bar anchorage system will further international harmonization of safety standards, while the flexible latchplate system will not. They also believe that the rigid bar anchorage system allows for greater design flexibility than the flexible latchplate system in the design of child restraints and the connectors used to attach to the anchorage system. They also believe that the rigid bar anchorage system will enhance safety better than the flexible latchplate system in side impacts, when rigid attachments are used on the child restraint to connect to the rigid 6 mm bars in the vehicle seat bight (the intersection of the seat cushion and the seat back). Many supporters of the rigid bar anchorage system cite test data that show that the system prevented head contact between a test dummy and the door structure in side impact simulations, while the flexible systems did not. Some child restraint manufacturers also believe that rigid attachments on both the vehicle and the child restraint could better limit head excursions of older children in frontal impacts.

NHTSA's selection of the rigid bar anchorage system harmonizes this final rule with the actions of other regulatory authorities around the world. Further, today's final rule adopts best practices in what has been a global effort to develop an effective and easy-to-use child restraint anchorage system. The rigid bar anchorage system is the one most likely to be chosen as an internationally harmonized design under the auspices of the United Nations Economic Commission for Europe. Canada is also in support of the rigid bar anchorage system and may be adopting the system in the future. This final rule also harmonizes with Canadian and Australian regulations by expressly requiring tether anchorages in vehicles and indirectly requiring tethers on most child restraints.

Harmonizing this rule with the actions of other international bodies is consistent with the goals of the Trade

Agreements Act of 1979, as amended (July 26, 1979, Public Law 96–39, section 1(a), 93 Stat. 144.) (19 U.S.C. 2501 *et seq.*). That Act requires, *inter alia*, Federal agencies to take into consideration international standards and, if appropriate, base the agencies' standards on international standards. The harmonization achieved by this rule permits vehicle and child restraint manufacturers to have a greater measure of planning certainty and predictability in designing and selling their products, helps ensure that parents are provided an anchorage system that meets their safety needs at the lowest possible cost, and eliminates a potential barrier to international trade.

d. Future Proposal To Promote the Usability of the New Child Restraints in Both Aircraft and Motor Vehicles

As NHTSA noted in its February 1997 NPRM, the Federal Aviation Administration (FAA) is concerned that some new child restraints might be manufactured with rigid ISO connectors or prongs that are neither foldable nor retractable. FAA believes that if a child restraint with non-folding, non-retracting rigid connectors were installed on an aircraft seat, the connectors or prongs might damage the aircraft seat cushions. They could also protrude into the leg space and egress path of the passengers sitting in the row immediately behind the seat.

NHTSA believes that the near-term prospect of child restraint manufacturers producing child restraints with non-folding, nonretractable rigid connectors is fairly remote. Most child restraint manufacturers are not using rigid connectors in their prototype development work. The one manufacturer focusing on rigid connectors has been using retractable rigid connectors or prongs in its product development work.

Nevertheless, the issue of child restraint/aircraft compatibility and consumer convenience is an important concern to NHTSA and FAA. The two agencies want parents to be able to buy a single child restraint that can be used in aircraft as well as in motor vehicles. To that end, NHTSA is developing a proposal to ensure that the new child restraints are not designed in a way that might make them unsuitable for aircraft use. The proposal would require that if a child restraint has rigid connectors, they must be foldable or retractable. As an alternative, the agency would propose to require foldability or retractability as a condition to certifying child restraints with rigid connectors for aircraft use. NHTSA expects to issue the proposal this spring.

II. Safety Issue

a. Why Is Something Being Done To Improve Child Restraint Safety? Aren't Child Restraints Highly Effective Already?

NHTSA estimates that, when installed correctly in a vehicle with compatible seating and seat belt systems, child restraints are 71 percent effective in reducing the likelihood of death in motor vehicle crashes. However, as a result of many child restraints either not being used correctly or installed in vehicles with seats or seat belts that are not fully compatible, the actual average effectiveness for the entire population of child restraints in use is 59 percent.[5]

b. Factors Affecting Child Restraint Effectiveness

The estimated 71 percent level of effectiveness is not realized in many cases for several reasons. Currently, the standardized means of attaching a child restraint is the vehicle belt system. Over the years, vehicle seats and belt systems evolved to better restrain the upper and lower torsos of older children, teenagers and adults. For example, seat belt anchorages are sometimes positioned several inches forward of the seat back to better position the lap belt low on the pelvis of these occupants. The need to design vehicle seat belts to perform the dual functions of restraining child restraint systems and of restraining the torsos of older children, teenagers and adults limits the extent to which vehicle belts can be designed to promote the effectiveness of child restraints.

To elaborate further on the example given above regarding seat belt anchorages, when vehicle belts attached to forward-mounted seat belt anchorages are used with a child restraint, the belts cannot initially provide any resistance to the forward movement of a child restraint in a frontal crash. The child restraint slides forward in a crash until the belt finally resists the forward movement of the child restraint. NHTSA estimates that seat belt anchorages positioned five or more inches forward of the seat back can increase the probability of severe or greater injury by over 11 percent. This final rule makes child restraints safer by reducing the likelihood of increased forward movement of the child's head, and the likelihood of head impact, and other traumas.

Other examples of the need to improve the compatibility of child restraint systems and vehicles include:

(1) The seat cushions and seat backs are deeply contoured. This improves the comfort of seated passenger and helps keep belted passengers in place, but limits the ability of the seat to provide a stable surface on which the child restraint can rest. This final rule will make child restraints more stable, regardless of the contours of the seat and seat back.

(2) The length of some seat belts and accompanying hardware attachments are not suitable for use with child restraints, or with special child restraints. In some seating positions, the distance between the anchorages for the lap belt and buckle is not as wide as a child restraint. In these cases, the seat belt may not tightly hold the child restraint and it can easily move from side to side. By providing a means for attaching child restraints that is independent of the vehicle belts, this final rule will improve the lateral stability of child restraints on the vehicle seat.

(3) Some vehicle seats are not wide enough or long enough to accommodate child restraints properly. This final rule will accommodate child restraints on these seats by providing an independent means of stability.

Efforts to make vehicle belt systems more effective for teenagers and adults have also resulted in the belt systems becoming more complex. Lap/shoulder belts replaced lap belts. On older vehicles, these belts need to be used with an accessory item, such as a locking clip, for use with child restraints. A locking clip impedes movement of the sliding latchplate on the lap/shoulder belt, which better restrains a child restraint when the car is maneuvering or changing its velocity. Since September 1, 1995, lap belts on new passenger vehicles are lockable without a locking clip, but the belt must be maneuvered in a special manner not always understood by consumers to engage the locking feature.

Due in part to these complexities, the rate of incorrect usage of child restraints is high. A four-state study done for NHTSA in 1996 examined people who use child restraint systems and found that approximately 80 percent of the persons made at least one significant error in using the systems. (''Patterns of Misuse of Child Safety Seats,'' DOT HS 808 440, January 1996.) Observed misuse due to a locking clip being incorrectly used or not used when necessary was 72 percent. Misuse due to the vehicle seat belt being incorrectly used with a child seat (unbuckled, disconnected, misrouted, or untightened) or used with a child too small to fit the belts was 17 percent.

[5] Hertz (1996), *supra.*

People are not only not using child restraints as correctly as they should, they are also frustrated with the effort needed to attach a child restraint. Consumer clinics conducted in the U.S.[6] and Canada[7] found that virtually all the people surveyed in the studies expressed high levels of dissatisfaction with conventional means of attaching child restraints in vehicles. NHTSA's Consumer Complaint Hotline received approximately 19,792 calls in 1996, 10,326 calls in 1997, and 19,935 in eight months in 1998, from people asking about child seat compatibility with a particular vehicle or how to correctly install a child seat, including requests for step-by-step guidance in installing their child seats. When an article appears in the media about compatibility problems between child restraints and vehicle seats, those calls typically increase to over 500 a day.

NHTSA is concerned that because of frustrations associated with vehicle to child restraint compatibility problems and the difficulties with installing child restraints, consumer confidence in the safety of child restraint systems could be eroding. A consumer clinic held in April 1998 showed that the number one consumer safety concern was with how tightly (secure) participants could get the child restraint installed in the vehicle. NHTSA estimates that about 35 percent of the rear seats of new passenger cars having seat belt anchorages 4 inches or more away from the seat bight. The agency is concerned that declining consumer confidence in child restraint systems could result in less use of child restraints. Being able to tightly secure a child restraint by way of an independent child restraint anchorage system provides consumers with confidence in child restraint safety and has the most potential for the highest, most effective, use of child restraints.

III. Summary of the NPRM

a. What NHTSA Proposed To Address the Issue; Preference for Flexible Latchplate Anchorage System Over the Rigid Bar Anchorage System

As a result of the usage and compatibility problems affecting the installation of child restraint systems in vehicles, NHTSA proposed that vehicles should be required to have a standardized system for attaching child restraints that was independent of the vehicle belts. On February 20, 1997, NHTSA published an NPRM proposing to require vehicles to have an independent ''child restraint anchorage system'' installed in two rear designated seating positions (in vehicles with two or more rear seating position) and to require child restraints to be equipped with a means of attaching to that system (62 FR 7858).[8]

A ''child restraint anchorage system'' was defined to consist of two lower child restraint anchorages at the seat bight and a tether anchorage for attaching a top tether strap of a child restraint system. The lower anchorages could consist of either flexible latchplates or rigid bar anchorages. However, NHTSA considered the flexible latchplate anchorage system to have cost and weight advantages over the rigid bar anchorage system, so the agency favored the flexible latchplate anchorage system by (1) requiring all child restraints to have buckles for the flexible latchplates and by (2) requiring each vehicle having rigid bar anchorages to provide adapters that could accommodate child restraints with the buckles for the flexible latchplates. At the time of the NPRM, Canada was also undertaking rulemaking to require user-ready tether anchorages and NHTSA sought to harmonize with those prospective requirements. (Canada has since adopted its proposal for the tether anchorages. See, section V.d., infra.) The agency's NPRM also proposed reducing allowable head excursion limits in the Federal safety standard regulating child restraint systems, Standard 213, which would have had the effect of requiring most, if not all child restraints to be equipped with an upper tether strap.

The NPRM proposed requirements to specify the construction of the child restraint anchorage system, the location of the anchorages, and the geometry of related components, such as the hardware that attaches to a child seat. To prevent the vehicle anchorages from failing in a crash, the anchorages, including structural components of the assembly, would have had to withstand specified loads in a static pull test.

NHTSA proposed applying the requirement for the flexible latchplate system to all passenger cars, and all trucks, buses and multipurpose passenger vehicles (MPVs) with a gross vehicle weight rating (GVWR) of 4,536 kg (10,000 lb) or less. Each vehicle would have had to have at least two flexible latchplate anchorage systems rearward of the front seat. If a vehicle had no rear seat or had insufficient space to accommodate a rear facing infant seat, and were equipped with an air bag cutoff switch, as original equipment (OE), that deactivates the air bag for the front passenger position, one anchorage system would have had to be provided in that position, and another in a rear seating position to accommodate a forward-facing child restraint. A built-in child seat could have been substituted for one of the systems, but not both, since rear-facing built-in systems are currently unavailable. If there were no switch to turn off the front passenger air bag, installation of an independent anchorage system would not have been permitted in the front passenger seat.

b. Proposed Leadtime

NHTSA believed that the user-ready tether anchorage requirement for vehicles could be made effective at a much earlier date than a requirement for the lower anchorages of the child restraint anchorage system. This was, in part, due to the fact that vehicles already had a tether anchorage structure (e.g., a reinforced hole) at rear seating positions to satisfy current Canadian requirements. The NPRM proposed that the tether anchorage requirement become effective September 1, 1999 for passenger cars and a year later for LTVs. These effective dates were the same ones proposed by Canada for its user-ready tether anchorage requirement. The NPRM proposed that the effective date for reducing Standard 213's head excursion requirement, thereby requiring a tether for most child restraints, would be September 1, 1999.

The agency sought comments on whether a phase-in requirement for the lower anchorages in vehicles would be appropriate, and how long a period is needed for full implementation of the requirement. Comments were also requested on the appropriateness of phasing-in the requirement that child restraints be equipped with the devices that connect to the vehicle child restraint anchorage system.

[6] ''An Evaluation of the Usability of Two Types of Universal Child Restraint Seat Attachment Systems,'' General Motors Corporation, 1996.

[7] ''The ICBC Child Restraint User Trials,'' Rona Kinetics and Associates Ltd. Report R96–04, prepared for the Insurance Corporation of British Columbia, December 1996.

[8] The NPRM was preceded by intensive agency efforts to develop and establish requirements for universal child restraint anchorage systems. For example, the agency held a public workshop in October 1996 to—

- Assess and discuss the relative merits, based on safety, cost, public acceptance and other factors, of various competing solutions to the problems associated with improving the compatibility between child restraint systems and vehicle seating positions and belt systems, increasing child restraint effectiveness, and increasing child restraint usage rates;
- Assess the prospects for the adoption in this country and elsewhere of a single regulatory solution or at least compatible regulatory solutions; and
- Promote the convergence of those solutions.

See NPRM, 62 FR at 7860.

c. NPRM's Estimated Benefits and Costs of the Rulemaking

The NPRM discussed the agency's tentative conclusions about the impacts (e.g., costs and benefits) of a final rule. The annual benefits of the rule were estimated to be 24 to 32 lives saved, and 2,187 to 3,615 injuries prevented.

The NPRM estimated the average cost of a rule requiring the flexible latchplate anchorage system would be approximately $160 million. The cost of the rule for vehicles was estimated to be about $105 million. The cost of the rule related to the vehicle would range, per vehicle, from $3.88 (one flexible latchplate anchorage system in front seat only) to $7.76 (for one flexible latchplate anchorage system in front seat and one in back seat or two flexible latchplate systems in rear seats). NHTSA estimated that 15 million vehicles would be affected annually: 9 million passenger cars and light trucks with ''adequate'' rear seats, 3 million vehicles with no rear seat, and 3 million vehicles that can only accommodate a forward-facing child seat in the rear seat (not a rear-facing infant seat). The cost of the buckle attachments on the child seat was estimated to be about $55 million (3.9 million child restraints (excluding belt-positioning boosters) at $14 per seat.) The rigid bar anchorage system was thought to increase the cost of a child restraint by possibly $100, assuming that the child restraint had to have rigid attachments and a heavy structure to support those attachments.

d. Alternatives Considered

The agency considered and tentatively rejected several alternatives to an independent child restraint anchorage system. Efforts to improve compatibility of child restraint systems and vehicle interior designs first focused on the extent to which vehicle seats and seat belt systems could better perform their dual functions of attaching child restraints and protecting adults, teenagers and older children. The agency evaluated what the industry had developed by way of design tools that would help optimize protection for both the restrained child and older population groups.

The Society of Automotive Engineers' (SAE) Recommended Practice SAE J1819, ''Securing Child Restraint Systems in Motor Vehicle Rear Seats,'' specifies guidelines that vehicle and child restraint manufacturers can use for designing their products with compatibility in mind. The recommended practice specifies a common reference tool, a ''Child Restraint System Accommodation Fixture,'' that both vehicle manufacturers and child restraint manufacturers can use in assessing compatibility. In addition, J1819 provides design values to vehicle manufacturers for certain characteristics of rear seats and seat belts, such as seat cushion shape and stiffness, and seat belt anchorage location, belt length, buckle and latchplate size, and lockability. Likewise, J1819 provides design guidelines to child seat manufacturers for child seat features that correspond to the vehicle features.

NHTSA believed that requiring compliance with J1819 alone would not sufficiently improve compatibility. Most, if not all vehicle and child restraint manufacturers already use J1819 when designing their products. Requiring compliance with J1819 also seemed excessively design restrictive for both vehicle and child restraint manufacturers. It would perpetuate the difficulties vehicle manufacturers have in designing their belts for the dual function of protecting both the child restraint occupant and the adult.

Another approach that NHTSA had taken to improve compatibility was to improve the belt system to specifically require a feature to improve the belt's usefulness with a child restraint system. For vehicles produced beginning in September 1995, NHTSA added a ''lockability'' requirement to the occupant crash protection standard (Standard 208). The rule requires the lap belt to be lockable to tightly secure child safety seats, without the need to attach a locking clip or any other device to the vehicle's seat belt webbing (58 FR 52922, October 13, 1993).

While the lockability requirement ostensibly makes a locking clip obsolete, it still depends on the user knowing enough and making the effort to manipulate the belt system.[9] Also, the vehicle belt must be routed correctly through the child restraint, which may not be an easy task in all cases. Further, the lockability requirement does not address the effects of forward-mounted seat belt anchorages on child restraint effectiveness.

It became apparent that what was needed was for the vehicle system that secured the child restraint system to be independent of the vehicle system that restrained and protected the adult, teenager and older child. This idea originated in Europe where work on a child restraint anchorage system quickly evolved, most notably in the technical committee of the International Organization for Standardization (ISO).

Cosco, a child restraint system manufacturer, suggested an independent child restraint anchorage system that is midway between using the vehicle's belts to attach a child restraint and the child restraint anchorage system developed by groups such as the ISO and adopted today by this final rule. Cosco's ''car seat only'' (CSO) system, consists of an independent lap belt that is installed in vehicle seats separately from the integrated lap/shoulder belts provided for adult passengers. Similar to other child restraint anchorage systems such as the ISO rigid bar system or GM's flexible latchplate system, the CSO is independent of the vehicle's current belt system. Yet, the CSO still uses the design concepts associated with a belt system, e.g., using a belt to wrap through or around the child restraint to latch it into the vehicle. To Cosco, that is the appeal of its system. Cosco believes that the CSO system would not require any changes in the design and manufacture of child restraints and thus would add no increase to the price of child restraints.

To NHTSA, the fact that the CSO system is essentially no different from the historic lap belt means the dissatisfaction many consumers have about the difficulty of attaching a child restraint is likely to be perpetuated with the CSO. NHTSA was concerned that the CSO system might not make attaching a child seat significantly easier than it is today. To NHTSA, a new means of attaching child restraints had to be explored. Commenters responding to the NPRM agreed.

IV. Summary of the Comments

NHTSA received over 70 comments in response to the rulemaking proposal.[10] Because the international community is considering adoption of a standard for a universal, independent child restraint anchorage system, the agency received submissions from foreign governments as well as domestic entities. All commenters agreed with the need for a universal, independent child restraint anchorage system and overwhelmingly concurred with the proposed requirements for a top tether anchorage. However, over half opposed the agency's choice of the flexible latchplate

[9] A typical lockability device is the seat belt retractor that can be converted from an emergency locking retractor (which locks only in response to the rapid deceleration of the vehicle or rapid spooling out of the seat belt webbing from the retractor) to an automatic locking retractor by slowly pulling all of the webbing out of the retractor and then letting the retractor wind the webbing back up.

[10] Comments and other materials relating to the NPRM were submitted to Docket No. 96–095, Notice 03, and Docket NHTSA–1998–3390.

system over the rigid bar anchorage system for the lower anchorage points.

a. Commenters Supporting Flexible Latchplate Anchorage System

The tentative choice of the flexible latchplate system was supported by the Michigan Department of State Police, the Automotive Occupant Restraints Council, General Motors (GM), Advocates for Highway and Auto Safety (Advocates), Indiana Mills and Manufacturing Inc. (IMMI), the Drivers' Appeal for National Awareness (DANA), Gerry Baby Products, and Evenflo Company.[11] (Gerry and Evenflo have since consolidated into one child restraint system manufacturing company.) Several members of Congress sent a letter supporting the flexible latchplate system.[12]

Proponents of the flexible latchplate anchorage system agreed with the agency's tentative conclusions in the NPRM that the flexible latchplate system appeared to be superior to the rigid bar anchorage system because a child restraint equipped with buckles to attach to the flexible latchplates would be less costly, bulky and heavy than a child restraint equipped with rigid attachments. Some commenters supported the flexible latchplate system because they believed that it needs a shorter leadtime for implementation. IMMI, which helped develop the flexible latchplate and buckle, believed that the appeal of its buckle is that it provides a simple, intuitive, easy to use, and familiar hardware concept which will give consumers ''a true sense of security and familiarity that will translate into more [child] seats being used as well as installed correctly.''

Some of the proponents of the flexible latchplate system objected to the rigid bar anchorage system. Based on its belief that there is no buckle that can latch to a round bar, and therefore that such a buckle would have to be developed, IMMI suggested that the rigid bar anchorage alternative would take three to five times as long to implement. IMMI was also concerned that, under the specifications now under consideration by the ISO working committee developing the draft standard for the rigid bar system, the 6 mm bar would be permitted to be located up to 70 mm (2.75 inches) rearward of the seat bight. The commenter believed that locating the bars 70 mm from the seat bight would seriously jeopardize their visibility and/or accessibility. A letter ''strongly opposing the round bar interface'' was submitted by Century Products, Gerry Baby Products, Evenflo Company, Kolcraft Enterprises, and IMMI.[13] The manufacturers stated that the rigid bar anchorage system is unacceptable, arguing that the—

> Rigidly mounted bars would not be visible or accessible inviting misuse or non-use of car seats. No specifications or technology exists for attachment connections to the round bar, and there is no guarantee that these connectors could be available in three to five years or be cost effective.

They were also ''concerned for the long term liability and risk associated with use and performance on rigid systems designed to be used with the 6 mm bar.''

b. Commenters Supporting Rigid Bar Anchorage System

The agency's proposal for making the flexible latchplate system the preferred system was opposed by the United Nations Economic Commission of Europe Group of Rapporteurs for Passive Safety (GRSP), the UK Parliamentary Advisory Council for Transport Safety, the UK Department of Transport, Transport Canada, the New South Wales Roads and Traffic Authority (Australia), Ford Motor Company, Chrysler Corporation, BMW of North America, Mercedes-Benz of North America, Volvo Cars of North America, Insurance Institute for Highway Safety (IIHS), Kathleen Weber of the University of Michigan Child Passenger Protection Research Program (UMCPP), Volkswagen of America, Fisher-Price, Britax Romer, the Millenium Development Corporation, Transport Research Laboratory Ltd. (TRL), Safe Ride News, SafetyBeltSafe, and the University of Kansas Medical Center. The commenters disagreed with the agency's tentative conclusions in the NPRM that the rigid bar anchorage system will be more costly and will add more weight and bulk to child restraints than the flexible latchplate system, and will likely need a longer leadtime to implement. They believed the rigid bar anchorage system and the flexible latchplate system will have similar cost, weight and leadtime impacts when the components that attach to the rigid bars are attached to a child restraint by webbing (some call this type of attachment a ''non-rigid attachment,'' versus a rigid attachment). The commenters further believed that the rigid bar anchorage system is superior because it allows for more design flexibility in what child restraint manufacturers can use to connect their child restraints to the rigid bars; has greater potential safety benefits (for child restraints equipped with rigid attachments) by reducing head excursion in side impacts and by eliminating the need for the parent to tighten belts; and enhances international harmonization of safety standards.

Several commenters stated that the agency's preference for the flexible latchplate system was based on faulty premises, such as the suggestion that hardware interfacing with the rigid bars will not be available in the near future (commenters identified tether hooks as an available, low-cost hardware); and that consumers are more familiar with buckles and latchplates than with an rigid bar anchorage connector. BMW stated that because both the flexible latchplate and rigid bar anchorage systems permit the use of non-rigid attachments on child restraint systems, BMW said there is no cost penalty associated with the latter. The commenter stated that buckles for both the latchplate and the rigid bar interfaces will have virtually the same cost in production quantities. Also, BMW believed that the rigid bar anchorage system could be implemented virtually as quickly as the flexible latchplate design, and within the same leadtime. The Insurance Institute for Highway Safety (IIHS) believed that buckles designed to attach to the rigid bars may cost as little as $1.10 and can be designed and produced in less than one year. As for vehicle costs, VW believed that the rigid bar anchorage system would be less expensive for vehicle manufacturers than the flexible latchplate system. (VW cited NHTSA's October 17, 1996 cost analysis which estimated vehicle costs for the flexible latchplate system to be $11.62, and for the rigid bar system, $7.55.)

Several commenters believed an area where the rigid bar anchorage system is superior to the flexible latchplate system is with regard to the design flexibility of the systems. Kathleen Weber stated that ''The [UCRA] flat plate, which can only be manifested in a soft-supported, protruding configuration, is a short term expedient that offers little opportunity for future

[11] It should be noted that GM and IMMI were instrumental in developing the flexible latchplate system. Century, Evenflo, Gerry and Kolcraft are members of the Juvenile Products Manufacturers Association (JPMA), which joined with GM, IMMI and other manufacturers in petitioning NHTSA to adopt the UCRA system.

[12] The letter, dated May 21, 1997, from U.S. Representatives Constance A. Morella, Steny H. Hoyer, George R. Nethercutt, Jr., Julia Carson and Martin Frost, stated that the flexible latchplate system ''would require no structural changes to new vehicles, and * * * is easy-to-use, employing buckle and latch-plate technology that is familiar to most consumers.'' Comment number 43 in Docket 96–95–N03.

[13] Century and Kolcraft have since informed NHTSA that with certain qualifications, they have decided to favor the rigid bar anchorage system over the UCRA. See section V.a, *infra*.

design improvement.'' Similarly, BMW believed that the flexible latchplate system—

> effectively freezes the current CRS technology * * *. [T]he U.S. public will be forced to endure a system that does not have the flexibility to provide both low cost child restraint systems (with soft attachments) and advanced child restraints with enhanced side impact protection and self-tensioning devices.

Many commenters, including Ford, Volvo, IIHS, the Roads and Traffic Authority (RTA) of New South Wales (Australia) and others, believed that the rigid bar anchorage system is superior to the flexible latchplate system with respect to safety. Ford Motor Company believed that the rigid bar anchorage system would increase child restraint safety over the flexible latchplate system, particularly in side impact crashes, at nearly equivalent cost for child restraint and vehicle manufacturers. RTA stated that, while there is very little difference in frontal crash protection provided by child restraints attached by a flexible latchplate system and by the rigid bar anchorage system, ''[t]he real differences show up when you conduct side impact tests. The rigid CANFIX/CAUSFIX[14] system appears to offer considerable improved performance over the UCRA system and the current Australian attachment system [lap belt and tether].'' The Department of Transport in the United Kingdom stated that ''[w]e fully support the adoption of rigid [6 mm diameter bar] anchorages believing that they will simplify the fitting of CRS, significantly reduce the misuse of CRS, and offer improved dynamic safety performance.'' The commenter expressed concern that the flexible latchplate and the rigid bar are not compatible with respect to their interfaces and that the flexible latchplate system ''does not offer the possibility of a transition to the rigid bar anchorage and the performance advantages it [the rigid bar system] offers.''

Several commenters also believed that the rigid bar anchorage system would enhance child restraint safety in areas other than side impacts, as well. Safe Ride News stated that a rigid bar anchorage system using rigid attachments on the child restraint would minimize misuse by permitting a simple, one-click installation that virtually eliminates adjustment problems. Similarly, IIHS believed that the rigid system (for both vehicle and child restraint system) has the advantage of not requiring parents to tighten any belts. ''Failure to tighten belts sufficiently is a common mistake parents make when using the current child restraint systems * * *.''

Some commenters expressed concerns about potential safety problems with the flexible latchplate system. In commenting in support of the rigid bar anchorage system, Transport Research Laboratory Ltd. (TRL) stated that ''A rigid attachment system [on both the vehicle and the child restraint] offers significant advantages over the soft systems in terms of ease of use and reduction in misuse. A soft attachment system, such as that proposed, while giving good performance when well tightened, will not give good performance when used as user trials suggest they will be used.'' (The commenter did not elaborate on this issue.) Volvo expressed a concern that ''the compressive forces and bending moments resulting from both handling of the CRS and a crash situation may give rise to excessive stresses and strains in the [flexible latchplate]. This is less likely with the round ISOFIX[15] attachments.'' (The commenter did not elaborate on this issue.) Volvo also stated that ''[i]n a test Volvo has performed using the UCRA attachment there have been incidents of unintentional unlatching of the latchplate due to the release button on the latchplate being too close to the adjust seat belt buckle.'' The commenter also stated that the UCRA latchplates may not be accessible for foldable seats after folding and unfolding the seat backs and seat cushions. IIHS also stated that ''using similar technology [to conventional seat belt buckles, as with the UCRA system] is not necessarily advantageous. In user trials, some consumers attempted to use the conventional seat belt latches to attach child seats rather than the designated child restraint latches in vehicles * * *.''

Almost all of the commenters supporting the rigid bar anchorage system argued that adopting that system would further international harmonization of safety standards while adopting the flexible latchplate anchorage system would not. The GRSP of the United Nations Economic Commission for Europe stated that all of the governmental representatives expressing a view on the NPRM supported a move to two point rigid lower attachments. The GRSP stated that ''* * * NHTSA should not encourage a unique national approach in its final proposals.'' Ms. Kathleen Weber, chairperson of the U.S. delegation to the ISO Working Group developing the draft ISO standard, stated:

> It is clear that the European vehicle industry will move quickly to recessed rigid bars for its [lower vehicle anchorages for child restraints], U.S. manufacturers with world platforms will do the same, and such anchors will probably be required in non-US markets within a few years. By requiring the flat plate anchor in the U.S. market, NHTSA will penalize consumers with an extra cost burden and will isolate its child restraint market from the rest of the world.

Similarly, Transport Canada believed that the preferred system worldwide is the rigid bar anchorage system, and thus expressed a concern that the proposal's preference for the flexible latchplate system does not provide for worldwide harmonization.

V. Summary of Post-Comment Period Events and Docket Submissions

a. ISO Working Group Refines and Completes Draft ISO Standard on Rigid Bar Anchorage System

Since the NPRM, ISO Working Group 1 (WG 1) finalized its working documents on the location of the rigid bar anchorages and the test procedure for evaluating them. In the June 1998 meeting in Windsor, Canada, the draft of the Canadian rule concerning requirements for top tether anchorages (see section d, below) was incorporated into WG 1 activities to serve as the basis for the preparation of an ISO document (ISO/WD13216–2) to be part of the ISO standard. The draft ISO standard will be circulated to the ISO member bodies for voting. To be adopted as an ISO standard, it has to be approved by at least 75 percent of the member bodies casting a vote. NHTSA understands that the full committee will vote on the draft international standard in early 1999.

B. Child Restraint Manufacturers Shift Support to Rigid Bar Anchorage System

In June 1998, the agency received letters from child restraint manufacturers Kolcraft, Cosco and Century expressing qualified support for the rigid bar anchorage system. These manufacturers had originally responded to the NPRM strongly opposed to that system but changed their minds apparently after realizing that the rigid

[14] CANFIX and CAUSFIX are the terms that Canada and Australia, respectively, use in referring to a rigid bar anchorage system with a tether anchorage. It is the system NHTSA is adopting today in this final rule. (Footnote added.)

[15] ISOFIX was the name originally used by the ISO working group to describe its rigid bar anchorage system. The ISOFIX design has evolved through the years from a 4-point rigid anchorage concept to a 2-point design. The commenter presumably is referring to the current 2-point anchorage system. For a discussion of the design evolution of ISOFIX, see NHTSA's February 1997 Preliminary Economic Assessment (which is entry 1 in Docket No. 96–95–N3).

bracket connector would not be required for the child restraint system.

These manufacturers stated that they now prefer the rigid bar anchorage system over the flexible latchplate system,[16] provided that the access and location of the anchorages allows design flexibility for either a frame mounted (bracket-based) or a flexible (strap) mounted connector on the child restraint. Factors cited for the change in preference were performance, future child restraint system design flexibility and international harmonization. Century said, however, that the bars have to be accessible and visible. Cosco believed that the cost effectiveness of the rigid bar anchorage system and flexible latchplate system would be approximately equal, and that ''any differences in the using public concerning ease of use and/or desirability of one with respect to the other would soon disappear if such a real difference exists at all today.'' Cosco stated that the rigid bar anchorage system

would help to eliminate certain types of force vectors which may occur within the system of flat latchplates that could be detrimental. It also clearly distinguishes the car seat attachment system from any other hardware that may be near by.

c. Industry Conducts Consumer Focus Group Testing on Which Lower Anchorage System Is Preferred

In April 1998, the American Automobile Manufacturers Association (AAMA) and the Association of International Automobile Manufacturers (AIAM) asked MORPACE International, Inc., to conduct a consumer clinic to determine which of several methods of attaching child restraints consumers in the U.S. find most acceptable. Century 1500 STE Prestige convertible restraints were used as the representative child restraint. The baseline method of attaching the Century seat was the vehicle belt system. This was compared against a flexible latchplate system (with the buckles attached to the child restraint by straps) and a rigid bar anchorage system (with hooks and other connectors attached to the child restraint by straps or by a rigid bracket attachment), and variations of these attachments. A Volkswagen Passat sedan was fitted with a flexible latchplate system and with the rigid bar anchorage system.

The clinic participants were 254 people who were the principal drivers of their vehicle and who care for children 4 years of age or less. Each participant was asked to install the child restraints and then asked about his or her interest in the restraint. Later, the participants were informed of the prices for the restraints and were asked again about their interest in each restraint. The prices MORPACE gave for the baseline child restraint was $63, the child restraint equipped with buckles for the flexible latchplate system was $78, the child restraint with the rigid bracket attachment for the rigid bar system was $128, the rigid bar anchorage strap-based restraint with a snap hook was $73, and the rigid bar anchorage strap-based system with a buckle-type connector to a 6 mm bar was $80.

The following is the percentage of the participants who were very/somewhat interested in the restraints before and after they were informed of the prices. UCRA (78/77 percent); rigid bar anchorage restraint with a buckle attached to it by webbing (67/57 percent); rigid bar anchorage restraint with rigid bracket-based attachment (64/45 percent); and rigid bar strap-based system with snap hook (64/45 percent). After the prices were provided, the UCRA restraint was most preferred (39 percent), followed by the rigid bar anchorage restraint with rigid bracket-based attachment (19 percent), the rigid bar strap-based system with snap hook (15 percent), and the rigid bar anchorage restraint with a buckle attached to it by webbing (14 percent). The study stated that the reason behind the bracket-based rigid bar anchorage option's being rated second instead of first is its higher price and weight. Restraints equipped with variations of these UCRA and rigid bar anchorage connectors also received support, as did the baseline restraint, albeit in smaller percentages. MORPACE prepared a final report on the clinic and its findings, which the agency placed in docket NHTSA–1998–3390.

Following the issuance of the report, a number of motor vehicle and child restraint manufacturers wrote to NHTSA concerning the findings. Copies of these letters have been placed in docket 3390. GM and Indiana Mills Manufacturing Inc. (IMMI) stated that they believed that the clinic showed that consumers' preferences are highly in favor of the flexible latchplate system. GM and IIMI stressed that the clinic showed that consumers are willing to pay the added cost of the flexible latchplate system for added security and performance, but that consumers will not accept the cost and weight of a bracket-based rigid bar anchorage child restraint.

Some manufacturers did not agree that the clinic necessarily showed a preference for the flexible latchplate system. BMW, Volvo, Volkswagen, Mercedes-Benz, Toyota, Fisher-Price and the University of Michigan Child Passenger Protection Research Program believed that the clinic showed that child restraint systems interfacing with the rigid bars had a combined first choice preference of 48 percent, compared to a 40 percent first choice preference for the flat latchplate. Chrysler did not believe it was appropriate to add the proportions of participants who expressed preferences for the rigid bar anchorage variants and to express that sum as a preference for the round bar anchorage. However, Chrysler believed that the clinic's findings are limited in that they reflect consumer views on the ''ease of use'' of a child restraint but not consumer preference for the vehicle anchorages used. Chrysler also reiterated its belief, expressed in earlier comments to the docket, that the rigid bar anchorage system has greater potential safety benefits than the flexible latchplate system.

Ford believed that while it may not be statistically valid to add the percentages of respondents favoring child restraints that attach to the rigid bar anchorages, it would be ''directionally right, in that the [rigid bar anchorages] are more flexible [design-wise] and can be used with a wider variety of child restraints.'' Ford believed that the clinic found that consumers want (1) an alternative way of attaching child restraints, and (2) more than anything, a child restraint that provides safety and security. Ford reiterated its belief that the rigid bar anchorage system is the best vehicle system. Ford said the system provides consumers with a wider variety of child restraints, and is the most immobile, a feature that MORPACE has said signifies to consumers that the seat is secure, which MORPACE says was ''the most important criterion'' for the respondents in evaluating a child restraint.

Century Products stated that it believed that the high preference rating for child restraints designed for the flexible latchplate system is due to the familiarity of the latchplates. The company stated that ''the three designs using the 6 mm rigid bars in the vehicle also showed acceptance by the respondents indicating that the 6 mm bar is acceptable to users.''

A number of these commenters also said that the prototype child restraints used in the clinic were of highly inconsistent quality. For example, some believed that the rigid bar anchorage bracket-based restraint was not representative because it was unrealistically heavy, high, and upright,

[16] Cosco continues to favor the CSO system above all, believing it to be the most cost-effective and quickest to implement.

in order to adapt the unmodified production Century restraint to a rigid bar anchorage base. It was 3.6 kg (8 lb) heavier than the UCRA restraint. They stated that, in contrast, the flexible latchplate restraint and others did not include the weight of any of the reinforcements that are needed for the restraint to meet Standard 213's dynamic test and thus were lighter than would be an actual restraint. They also believed that the vehicle's flexible latchplates used in the clinic were substantially more sophisticated than what the agency had proposed and thus far more costly. Chrysler also said that the $128 price given for the rigid bar anchorage bracket-based child restraint was too high, because costs would be lowered if the bracket mechanism were produced in high volume.

d. Canada Issues Rule on Tether Anchorages

In September 1998, Canada adopted its final rule amending its tether anchorage requirement in section 210.1 of the Canadian Motor Vehicle Safety Regulations. As a result of an effort to harmonize internationally on tether anchorage requirements, NHTSA's proposal on tether anchorages reflected almost all of the provisions that had been proposed by Canada (March 15, 1997) prior to its final rule.

Since 1989, Canada had required that tether anchorages be installed on all passenger cars. However, that requirement did not require tether anchorages to be ''user-ready,'' i.e., it did not require the installation of the hardware necessary for the attachment of the tether strap. Consumers could not use the tether anchorage on the vehicle as delivered from the factory. While Canada required that manufacturers provide a pre-drilled hole in a reinforced location specifically designed for the installation of the hardware, it did not require that such hardware be installed. Consequently, parents typically had to take their vehicle to a dealer or repair shop to have the hardware installed. Canada's new rule requires the factory installation of user-ready tether anchorages for all anchorages in passenger cars manufactured on or after September 1, 1999, and a year later in all minivans and light trucks.

The Canadian rule requires a specified number of tether anchorages, depending on vehicle type and the number of rows or seating positions in the vehicle. Generally, it requires passenger cars and minivans to have two or three anchorages. The rule specifies the zone in which a tether anchorages must be located for a particular seating position. It specifies strength requirements, and a method for testing the strength of the anchorages.

The rule contains a number of changes to the test procedure that Canada had proposed for testing the strength of the anchorages. The proposal would have specified testing the anchorages by attaching a strap to the anchorage and passing that strap forward over the seat back. In response to comments and discussions with manufacturers, Canada changed the test method to specify the use of one of two prescribed static force application test devices. Both represent a child restraint system with a tether. One device replicates a child restraint that attaches to a rigid bar anchorage system. This device will be used to test the tether anchorage in a seating position that has the rigid bar anchorage system. The other represents a child restraint that is attached by the vehicle's belt system, and is used to test a tether anchorage at a position that is not equipped with a rigid bar anchorage system. The test is conducted by installing the test device on the seat using the seat belt or the rigid bars, as appropriate, attaching the tether strap to the tether anchorage, and applying a test force to the child restraint device, rather than directly to the tether anchorage.

VI. Agency Decision Regarding Final Rule

a. Summary of the Final Rule

This final rule requires motor vehicle manufacturers to install child restraint anchorage systems, consisting of lower rigid bar anchorages and a user-ready upper tether anchorage, in their vehicles. The 6 mm round bars in the vehicle seat must be rigidly mounted. Thus, they may not be attached to the vehicle by webbing material. This rule also requires child restraints to be permanently equipped with a means of being attached to the lower vehicle anchorages. It does not, however, specify either the design of the means of attachment or how that means is permanently attached to the child restraint.

This rule requires vehicles to have two child restraint anchorage systems at two rear designated seating positions, if the vehicle has at least two rear seating positions. This rule also requires vehicles with three or more rear designated seating positions to have a user-ready upper tether anchorage at a third rear seating position.[17] It amends the child restraint standard by reducing the limits on allowable head excursion. The agency expects that in order to comply with the reduced limits, most forward-facing child restraint models will be equipped with an upper tether strap. When used, a tether reduces head excursion and the likelihood of head impacts against the vehicle structure.

To provide consumers with the rigid bar anchorage system as quickly as possible, this rule will start a three-year phase-in of the requirements for the rigid bars, beginning September 1, 2000. The bars will ultimately be required in all passenger cars, and in trucks and multipurpose passenger vehicles with a gross vehicle weight rating (GVWR) of 3,856 kg (8,500 lb) or less, and in buses (including school buses) with a GVWR of 4,536 kg (10,000 lb) or less. There will be a two-year phase-in of the user-ready tether anchorage for passenger cars beginning September 1, 1999. The user-ready tether anchorage will be required in the other vehicle types[18] beginning September 1, 2000.

Child restraints will be required to have the components for attaching to the rigid bars beginning September 1, 2002. The restraints will be dynamically tested under Standard 213 when attached by those components to rigid bars on the standard seat assembly specified in the standard. They will be tested both with and without attaching a tether. Child restraints will have to meet a reduced head excursion limit beginning September 1, 1999. A tether will probably be needed to meet this requirement, and one may be attached for the test. Child restraints will also have to meet the standard's existing head excursion limit when tested attached by a lap belt and nothing else, to ensure that head excursion is limited if the tether is not used.

The estimated average cost of this rule is approximately $152 million annually. The cost of the rule for vehicles is estimated to be about $85 million. The costs of the rule related to the vehicle will range, per vehicle, from $2.82 (one rigid bar anchorage system in front seat

[17] If a vehicle has a rear seat with insufficient space to accommodate a rear facing infant seat, and is equipped with an OE air bag cutoff switch that deactivates the air bag for the front passenger position, one anchorage system must be provided in that position, and another in a rear seating position to accommodate a forward-facing child restraint. If a vehicle has no rear seat, and is equipped with an OE air bag cutoff switch that deactivates the air bag for the front passenger position, one anchorage system must be provided in that position.

[18] Because of practicability concerns, convertibles and school buses are excluded from the tether anchorage requirements.

only) to $6.62 (for a system in front seat and one in back seat or two systems in rear seats, plus a tether anchorage). NHTSA estimates that 15 million vehicles will be affected annually: 9 million passenger cars and light trucks with ''adequate'' rear seats, 3 million vehicles with no rear seat, and 3 million vehicles that can only accommodate a forward-facing child restraints in the rear seat (not a rear-facing infant seat). The impact of the rule on child restraint systems is estimated at $67 million (3.9 million child restraints at $17.19 per restraint, based on webbing-attached connectors). The cost per child restraint system varies depending on the type of connector used, e.g., a hook versus a buckle, and the means used to attach the connector to the child restraint system, e.g., webbing versus a rigid attachment.

The annual benefits of the rule are estimated to be 36 to 50 lives saved, and 1,231 to 2,929 injuries prevented.

b. Summary of Key Differences Between NPRM and Final Rule

The main difference between the final rule and the NPRM concerns the lower anchorage portion of the child restraint anchorage system in vehicles. Instead of permitting a choice between lower anchorages of either the flexible latchplate system or the rigid bar system, the final rule mandates the latter system. The NPRM would have allowed vehicle manufacturers the option of installing the rigid bar system only if they provided an adapter, such as a connector (that need not have been permanently attached to the vehicle) that would have had a component on one end that latches onto the rigid bar, and a latchplate on the other, for attaching to buckles on a child restraint that is designed for a flexible latchplate anchorage system. Commenters overwhelmingly opposed an adapter, believing that the adapter would be lost or misused by consumers. On reevaluating this issue, NHTSA agrees that mandating a single system would better ensure that the child restraint anchorage system is universal to all vehicles, for all child restraints, and for all consumers regardless of the type of vehicle or child restraint they may be using for a particular trip.

Second, this final rule requires vehicle manufacturers to rigidly-mount the 6 mm bars. Thus, it does not permit the bars to be attached to the vehicle by webbing, as had been proposed. The purpose of requiring rigid mounting is to maintain better control over the compatibility between child restraints and the anchorage system. However, connectors on the child restraint are permitted either to be attached by webbing, or to be rigidly mounted.

Other differences between this final rule and the NPRM relate to provisions concerning: the types of vehicles and of child restraints that are subject to the requirements; the number of anchorage systems that are required in each vehicle; the visibility and placement of the rigid bars in the vehicle; a requirement for an audible or visual indicator that the child restraint is securely attached to the bars; the strength requirements and test procedures for testing the child restraint anchorage system and the tether anchorage; and leadtime for and a phase-in of the requirements.

VII. Issue-by-Issue Discussion of the Agency Decision on Content of Final Rule

a. NHTSA Determines the Anchorage Systems Are Essentially Equal on the Merits

The agency initially gave preference to the flexible latchplate anchorage system over the rigid bar anchorage system after weighing the abilities of each system to accomplish the goals that the agency believed a uniform attachment system should meet. 62 FR at 7867–7868. NHTSA believed that an anchorage system should:

—Improve the compatibility between child restraint systems and vehicle seats and belt systems, thereby decreasing the potential that a child restraint was improperly installed;
—Ensure an adequate level of protection during crashes;
—Ensure correct child restraint system use by ensuring that the child restraint systems are convenient to install and use, and will be accepted by consumers;
—Ensure that the child restraint systems and anchorages are cost effective and available within a reasonable leadtime; and,
—Achieve international compatibility of child restraint performance requirements for uniform anchorage points.

NHTSA tentatively concluded that the flexible latchplate system would, on balance, best achieve these goals. The agency stated that the rigid bar anchorage system and flexible latchplate anchorage system appeared comparable in terms of safety performance and public acceptance, but the flexible latchplate anchorage system appeared to have advantages over the others with respect to its cost impact, and near-term availability. The agency further stated that the flexible latchplate anchorage system had advantages in terms of its usability and visibility. The agency believed the familiarity of the components (particularly the crucial connector pieces—buckles and latchplates—that attach a child restraint to the vehicle system) was a definite advantage over the other systems. Also, the agency believed that child restraints designed for use with the flexible latchplate system were not as bulky or heavy as child restraints designed for use with the rigid bar anchorage system, which would increase the public acceptance of the flexible latchplate system.

The agency's proposal to give preference for the flexible latchplate system over the rigid bar anchorage system for the lower anchorages was supported by some commenters, but opposed by most commenters in their comments on the NPRM or in their post-comment period submissions. Proponents of the flexible latchplate anchorage system agreed with the agency's tentative conclusions in the NPRM that the system appeared to be superior to the rigid bar system because a child restraint made for the flexible latchplate anchorage system would be less costly, bulky and heavy than a child restraint designed to attach to a rigid bar anchorage system. Some commenters supported the flexible latchplate anchorage system because they believed that a rule based on that system could be implemented more quickly. Some believed that the flexible latchplate system was preferable because its buckle is simple, intuitive, and familiar to consumers. GM argued that the AAMA/AIAM 1998 consumer clinic proved that consumers overwhelmingly prefer the flexible latchplate anchorage system because of its superior installation accuracy and acceptable costs, compared to alternative concepts, including the rigid bar anchorage system.

Opponents of the flexible latchplate anchorage system disagreed with those views. They believed the rigid bar anchorage system and the flexible latchplate anchorage system would have similar cost, weight and leadtime impacts. They stated that the agency's tentative decision to give preference to the flexible latchplate anchorage system was based on faulty premises, such as believing that the hardware interfacing with the rigid bars would necessarily be costly and unavailable in the near-term. These parties strongly disputed that the 1998 consumer clinic showed the flexible latchplate anchorage system had greater public acceptance. In fact, many believed the clinic showed a public preference for systems using the rigid bar anchorage system in the vehicle,

because most of the respondents chose, as their first choice, variations of child restraints that had attachments that were designed to attach to the rigid bar anchorage system. (Forty-eight percent chose child restraints designed to attach to the rigid bars, compared to 39 percent that chose child restraints designed for the flexible latchplate system.)

After reviewing the comments and other new information before it, NHTSA concluded it needed to revise its assessment of the relative merits of the flexible latchplate system and the rigid bar anchorage system. The agency's main reason for proposing to give preference to the flexible latchplate system over the rigid bar anchorage system was information indicating that the installation of rigid bar anchorage systems in motor vehicles would make it necessary for child restraints to be equipped with the following three features: two rigid prongs, or brackets; a heavy supporting structure for those prongs or brackets; and specialized jaw-like clamps to attach to the rigid lower anchorages on the vehicle. This information consisted of statements by the supporters of the rigid bar anchorage system describing the child restraints and of the prototypes or mock-ups they had provided prior to the NPRM. Those prototypes or mock-ups included all three of these features. The addition of these features to child restraints would have had a substantial cost impact on child restraints (essentially doubling the price of a child restraint), and added substantially to its bulk and weight. The agency also believed that manufacturers would need substantial time to design child restraints with the brackets and supporting structure. Further, NHTSA was concerned that consumers would not be familiar with the new technology.

All commenters supporting the rigid bar anchorage system told the agency that the brackets were *not* necessary to attach a child restraint to the rigid bar anchorage system. Commenters, including many child restraint manufacturers, said that a simple hook, made to attach to a rigid bar, could and would be used by many child restraint manufacturers if the rigid bar anchorage system were adopted. The hook could be attached to the child restraint by means of webbing, identical to the attaching of the buckle on a child restraint designed for the flexible latchplate system. After the NPRM was published, some child restraint manufacturers developed prototype child restraints, equipped with hooks, to demonstrate to NHTSA the feasibility of using hooks as the connector hardware and of using webbing for attaching hooks to a child restraint. Further, almost all of the child restraint manufacturers asserted that, if allowed, they would use straps to attach the connector to the child restraint. These assertions apparently reflected their judgment that the use of straps would be practicable and publicly acceptable.

These new prototypes, reinforced by the new assertions of the child restraint manufacturers, changed NHTSA's assessment of the relative advantages of the flexible latchplate and rigid bar anchorage systems. The emergence of straps as a viable means of attaching the connector made it necessary for the agency to reverse its earlier tentative conclusion that a child restraint must have the heavy brackets to attach to a rigid bar anchorage system, and its derivative tentative conclusions about related advantages of the flexible latchplate system concerning the cost, bulk, and weight of child restraints designed for the system.

NHTSA's cost estimates in the NPRM were based on the information indicating that the brackets had to be used on the child restraint system. The high cost of a rigid bar anchorage child restraint, relative to a flexible latchplate child restraint, was mostly due to the material then believed by the agency to be needed for the bracket structure and not to the cost of the hardware connecting to the 6 mm bar. Several commenters stated that buckles designed to attach to 6 mm bars would, as production volume rose, ultimately be comparable to, if not less than, the cost of the buckle of the flexible latchplate system. NHTSA agrees with these statements because the types of components (spring, latch, release button and casing) of current prototype buckles designed to attach to a rigid bar and to the flexible latchplate, are basically the same. Because the same types of components are used in both buckles, it is reasonable to conclude that the cost under similar production assumptions are likely to be similar. Thus, there would be no significant cost difference between a child restraint designed for the rigid bar anchorage system that uses webbing to attach the connector to the restraint and a child restraint designed for the flexible latchplate system. Accordingly, the agency now concludes there need not be a cost advantage to the flexible latchplate system compared to the rigid bar anchorage system.

NHTSA also believes that child restraints designed for the rigid bar anchorage system would be comparable in weight and bulk to child restraints designed for the flexible latchplate anchorage system if they used webbing to attach the connector to the child restraint. The incremental bulk and weight of a rigid bar anchorage child restraint, relative to a flexible latchplate child restraint, was due to the material then believed by the agency to be needed for the bracket structure and not to the hardware connecting to the rigid bar. Accordingly, there need not be an advantage to the flexible latchplate anchorage system over the rigid bar anchorage system in terms of the bulk and weight of the child restraints.

b. There Is Substantial Consumer Interest in Both Anchorage Systems

Supporters of the flexible latchplate anchorage system argue that the AAMA/AIAM consumer clinic shows that consumers prefer their system and that for this reason, the flexible latchplate system should prevail. NHTSA's view of the clinic results is discussed in Appendix B. In brief, the agency cannot conclude that the results clearly warrant the agency's selection of either the flexible latchplate system or a rigid bar anchorage system. The agency recognizes that consumers gave their highest scores to the flexible latchplate design used in the clinic. However, combining the results of the child restraints designed for the rigid bar anchorage system accounted for an even larger number of participants. Further, NHTSA believes that the high score of the flexible latchplate design was at least partially due to the fact that consumers are currently more familiar—and perhaps more comfortable—with the buckle and latchplate design. The agency believes further that once the rigid bar anchorage system and child restraints with the new connectors are introduced, the public will become equally familiar and comfortable with those new designs. Moreover, the agency anticipates that consumers will be receptive to the design flexibility of the rigid bar anchorage system. As discussed below in section d.2., the anchorage system allows them to choose from a variety of connector hardware designs and child restraint systems to satisfy their needs.

c. NHTSA Determines Only One Lower Anchorage System Can Be Selected

The NPRM would have allowed vehicle manufacturers the option of installing the rigid bar anchorage system if they provided an adapter (that need not be integral to the vehicle) that would enable a child restraint that is designed for the flexible latchplate system to be used with the rigid bars. The adapter would have to latch at one end onto the rigid bar and at the other end onto the flexible latchplate system buckle. Commenters overwhelmingly

opposed the concept of an adapter, believing that adapters would be lost or misused by consumers. For example, Toyota Motor Corporation stated that an adapter—

> will further complicate the tightening procedure and therefore securing the CRS will be more difficult. Accordingly, we believe that there will be an increased possibility of misuse, resulting in loose fit and/or improper securing of the CRS to the vehicle. In addition, we believe this will add to the owner's confusion as to how to properly affix this system. * * * In addition, Toyota is concerned as to whether the owner of these vehicles will take the necessary precautions to keep from losing the adapter(s), as any additional loose articles in a vehicle are more likely to be misplaced or lost.

After reviewing the comments, the agency concludes that mandating a single type of anchorage system would ensure that motorists will find the same child restraint anchorage system in all vehicles and that the system will be compatible with all child restraints, regardless of the make or model of vehicle or child restraint they may be using for a particular trip. Allowing use of an adapter might not only perpetuate existing child restraint compatibility problems, but also exacerbate them beyond what they are today. Thus, the agency decided it must choose one, and only one, system to require.[19]

d. NHTSA Selects the Rigid Bar Anchorage System Based on Its Advantages Over the Flexible Latchplate Anchorage System

1. The First Advantage Is Harmonization of Standards

NHTSA's selection of the rigid bar anchorage system advances its international harmonization policy goal of identifying and adopting those non-US safety requirements that reflect equivalent or higher levels of safety performance than the counterpart U.S. standard. Requiring the rigid bar system will enhance the safety of child restraints by making them easier to install and possibly more securely installed than by means of the vehicle's belt system. Further, harmonizing the U.S. standard permits vehicle and child restraint manufacturers to have a greater measure of planning certainty and predictability in designing and selling their products, helps ensure that parents are provided an anchorage system that meets their safety needs at the lowest possible cost, and facilitates the global marketing of child restraints.

NHTSA's selection of the rigid bar anchorage system also accords with its statutory obligations. The Trade Agreements Act of 1979, as amended (July 26, 1979, P.L. 96–39, § 1(a), 93 Stat. 144.) (19 U.S.C. § 2501 *et seq.*), requires Federal agencies to take into consideration international standards and, if appropriate, base the agencies' standards on international standards. In addition, the National Technology Transfer and Advancement Act of 1995 (P.L. 104–113) requires all Federal agencies to use technical standards ''that are developed or adopted by voluntary consensus standards bodies, using such technical standards as a means to carry out policy objectives or activities determined by the agencies and departments.''

The rigid bar anchorage system is the one most likely to be chosen as a harmonized design under the auspices of the United Nations Economic Commission for Europe (UN/ECE).[20] The rigid bar anchorage system is supported by the expert group within WP.29 that considers issues relating to child restraints and vehicles, the Group of Rapporteurs for Passive Safety (GRSP). At the 23rd session of the GRSP meeting of experts in June 1998, the GRSP accepted a proposal for requiring rigid bar anchorages. At the 24th session of the GRSP meeting of experts in December 1998, the GRSP formed an informal group to look into developing a proposal to be presented at the May 1999 GRSP meeting. The proposal is to consist of alternative means, including a top tether, to reduce the possibility of undesirable rotation that might otherwise occur when a child restraint is attached to some vehicle seats by means of the two lower rigid bar anchorages only. The GRSP plans to discuss the proposal during the May 1999 meeting and expects to decide during its December 1999 meeting whether to adopt a means to address the concern of possible undesirable rotation and, if so, which means should be adopted.

The rigid bar anchorage system is also favored in other international forums as well. The rigid bar anchorage system, with a top tether anchorage, is the system preferred by Canada and Australia and is the child restraint anchorage system most likely to be adopted by those countries. Both of these countries already require a user-ready tether anchorage for attaching child restraints.

The International Standards Organization (ISO) also appears to be moving toward adoption of the rigid bar system. The ISO working group that has been developing the rigid bar anchorage system is completing its working documents on the system and is preparing to circulate the draft standard to the ISO member bodies for voting. The ISO working group circulated a committee draft report for voting. The ballots received by the deadline of May 4, 1998 showed that no country disagreed to circulate a draft of the international standard to the ISO Central Secretariat for ballot. (The U.S. abstained from voting because agreement has not been reached within the U.S. domestic auto industry on the use of rigid versus flexible anchorages.) NHTSA understands that the full committee will vote on the draft international standard in the near future. To be adopted as an ISO standard, the draft has to be approved by at least 75 percent of the member bodies casing a vote.

2. The Second Advantage Is Enhanced Design Flexibility Which Provides a Reasonably Predictable Prospect for Design Improvements That Will Enhance Either Safety or Public Acceptability or Both

The rigid bar anchorage system encourages design flexibility to a greater extent than the flexible latchplate anchorage system. The rigid bar anchorage system has the advantage of allowing child restraint manufacturers flexibility in developing a variety of possible connectors to the bars. Unlike the flexible latchplate system, which envisions a specific design of a buckle to connect to the latchplate, the rigid bar anchorage system gives child restraint manufacturers maximum leeway in

[19] In the NPRM, the agency discussed its tentative conclusion that J1819 and FMVSS No. 208's lockability requirement were insufficient as alternative solutions to an independent child restraint anchorage system. The agency did not receive any comments opposing this. The agency also tentatively rejected Cosco's CSO system as an alternative to the proposed child restraint anchorage system. Cosco commented in disagreement with the agency. NHTSA's final decision declining to use the CSO system is explained in Appendix A to this final rule.

[20] The UN/ECE Working Party on the Construction of Vehicles (WP.29) administers an agreement, known as the 1958 Agreement, concerning the adoption of uniform technical prescriptions for wheeled vehicles, equipment and parts and develops motor vehicle safety regulations for application primarily in Europe. (While U.S. officials actively participate in WP.29 and thus participate in the development of standards, the United States is not a Contracting Party to the 1958 Agreement. Thus, it cannot vote on whether a regulation is to be adopted by the Contracting Parties.) Various expert groups within WP.29 make recommendations to WP.29 as to whether regulations should be adopted as ECE regulations. WP.29 in turn makes recommendation to the Contracting Parties to the 1958 Agreement. It is ultimately the Contracting Parties that vote on whether a recommended regulation is to be adopted under the Agreement as an ECE regulation.

designing connectors.[21] For example, child restraint manufacturers may use designs ranging from jaw-like clamps to buckles to simple hooks, and may attach these to the child restraint using means ranging from brackets to webbing. A number of child restraint manufacturers support the rigid bar system because of its design flexibility.

The design flexibility of the rigid bar system also has implications for potential improvements in the safety provided by child restraints. For example, Century Products has indicated that the rigid bar system could enable them to design booster seats (a type of child restraint system, see 49 CFR 571.213, S4) for children over 18 kg (40 lb) that could better limit head excursion than present boosters. A rigid attachment on the booster restraint might reduce some of the excessive forward motion that a child restraint attached to the vehicle seat by a belt experiences when tested with a 6-year-old dummy, due to elongation of the belts.

Consumers would also benefit from design flexibility, in that they could choose from a variety of child restraint systems to purchase to suit their needs or tastes. For some, a one-step ''plug-in'' design, such as that seen on Britax prototypes with rigid connectors, might be the most convenient or desirable, while others may prefer a child restraint that has a connector attached by webbing because such a system would weigh and cost less than restraints that have rigid connectors.

3. The Third Advantage Is Possible Safety Benefits

The NPRM stated that both the flexible latchplate anchorage system and the rigid bar anchorage system have performed satisfactorily in dynamic tests, which implied that both would provide comparable levels of safety. Supporters of the rigid bar anchorage system disagreed with the agency, suggesting that that system has the potential to better protect children with regard to two aspects of safety.

The first safety aspect concerns the relative performance of the systems in side impacts. Michael Griffiths and Paul Kelly of the Roads and Traffic Authority (RTA), New South Wales, Australia, submitted data on side impact sled tests RTA conducted comparing the performance of the CAUSFIX system (CAUSFIX is the rigid bar anchorage system with a tether anchorage, which is the system NHTSA is adopting in this final rule, *see* footnote 13, *supra*), the flexible latchplate system, and a lap belt plus tether system. (''Comparative Side Impact Testing of Child Restraint Anchorage Systems,'' Kelly, Roads and Traffic Authority, New South Wales, Special Report 96/100, March 1997.) The side impact tests were conducted in accordance with Australian Standard (AS) 3691.1, except for the addition of a simulated door structure, replicating a rear door of a large sedan, adjacent to the test seat. Testing was conducted with the test seat mounted at both 90 degrees and 45 degrees to the direction of sled travel. The lower anchorage points for the CAUSFIX were positioned 280 mm (11 inches) apart on the test seat structure, with the inboard anchorage approximately 610 mm (24 inches) from the inner surface of the door. An instrumented 9-month-old dummy was used in all the tests.

RTA found that, for forward-facing seats,[22] only the CAUSFIX was able to prevent contact between either the dummy's head or the child restraint and the door structure in the 90 degree test. RTA stated that head contact with the door was evident in the test involving the flexible latchplate system.

> This appeared to be largely the result of the restraint rotating towards the door at the end of its sideways movement. As a consequence, the dummy's head moved forward relative to the CRS [child restraint system] and contacted the front portion of the side-wing. In turn, the side-wing deflected and allowed the head to roll around its front edge, as the CRS rebounded from the door * * *. In contrast, the CAUSFIX system did not allow rotation * * *. The CAUSFIX concept offered better head protection compared to the conventional seat belt/top tether systems.

(*Id.*, page 5.)

Many of the supporters of the rigid bar anchorage system included comments on their belief that side impact benefits could be attained with the system. In contrast, GM stated in its comment (pp. 10–11):

> It has been alleged that the proposed combination of UCRA anchorages and a strap-based CRS may not provide adequate protection in a high severity lateral impact. However, no field accident statistics have been provided to support an allegation that high speed lateral impact performance should be a primary area of concern in the U.S. In fact, data analyzed by NHTSA researchers demonstrate that the primary child safety issue is the non-use of CRSs. A secondary concern is misuse of the CRS. Misuse includes failing to properly fasten the CRS's internal harness system or improperly securing the CRS in the vehicle.
>
> While various groups continue to develop proposals for lateral impact test protocols and related dummy and injury assessment techniques, it appears unlikely that consensus on these topics will be reached for years. The continued debate should not delay implementation of improved CRSs and UCRA systems. This is particularly true since it is not apparent that the current U.S. field situation demonstrates a need for a side impact crash evaluation protocol. Further, it has not been established that lateral dummy head excursion is a meaningful predictor of injury in side impacts. Even if it were, NHTSA tests have shown that the existence of a top tether reduces lateral head excursion by one third compared to a current CRS secured without a top tether * * *.

NHTSA has evaluated these and all other comments on this issue and concludes that the agency cannot make a precise determination of the relative side impact benefits based on the information available thus far. The RTA's test data were few in number. Further, the real world relevance of the 90 degree test is unclear at this point. NHTSA does not know if the path of a child's head in a 90 degree impact will necessarily be lateral. The path will depend on a variety of factors, including the speed of the struck vehicle, and the point of impact to the struck vehicle (forward part, middle, rear part). Further, NHTSA cannot determine at this time whether reduced head excursions would necessarily reduce injuries and fatalities in side impacts. Crash data should be analyzed to determine answers to these issues. The agency has been working with the ISO working group on the development of a side impact test procedure. NHTSA will be taking part in an evaluation of the side impact test protocols in the future. For now, however, the agency cannot conclude that the rigid bar anchorage system is more advantageous than the flexible latchplate system in side impacts.

The second aspect of safety on which proponents of the rigid bar anchorage system commented was that the combination of rigid lower anchorages

[21] Some opponents of the rigid bar anchorage system were concerned that Britax may hold a patent on a specific ''jaw'' type of connector and could restrict the free use and development of the connector by other manufacturers. In communications between Britax and NHTSA, Britax has repeatedly stated that it does not hold a patent on the connector. The agency has reviewed copies of patents 5,524,965, 5,487,588 and 5,466,044 which Britax submitted to NHTSA, and agrees with Britax that it did not have a patent on the connector itself. (The patents were for various designs of child restraints that had the jaw connector.) In further response to a request by NHTSA, by letter dated August 10, 1998, Britax informed the agency that it has filed a Terminal Disclaimer to waive all patent rights to ISOFIX connectors described in patents 5,524,965, 5,487,588 and 5,466,044. A copy of this letter has been placed in the docket. The effect of Britax's action is to dedicate these patents to the public, thus waiving any patent protections it may have for these patents. This puts to rest the concerns that were raised about Britax possibly restricting the free use of development of the connector.

[22] The rear-facing seats were tethered. Because today's rule does not require rear-facing infant seats to have a tether, this discusses only the tests of the forward-facing seats.

on both vehicles and child restraints would virtually guarantee that the child restraint would be snugly attached to the vehicle seat. Commenters stated that studies and informal clinics have shown that consumers regularly fail to properly tighten the belt used to install child restraints. With a rigid bar anchorage system on both the vehicle and the child restraint, the child restraint is secured automatically once the consumer properly attaches the two rigid points of the seat, so there is no need for a separate tightening action by the consumer. Conversely, GM stated that concerns about parents not tensioning the flexible latchplate belts are unfounded, based on the findings of GM's consumer preference clinic (GM did not elaborate on those findings).

A number of consumer advocates urged NHTSA to adopt the rigid bar anchorage system because they have witnessed that parents often do not adequately tighten the vehicle belt attaching the child restraint to the vehicle. A child restraint with rigid attachments designed to attach to rigid bar anchorages in the vehicle would eradicate the problem of excessive slack in the belts.[23] By adopting the rigid bar anchorage system, this final rule provides consumers the rigid bar anchorage system in the vehicle and provides them the opportunity to purchase a child restraint with the rigid attachments if they want the more convenient system.

e. NHTSA's Final Rule Is Not Identical to the Draft ISO Standard

This final rule adopts most of the requirements under consideration by the ISO, adopts some that are not part of the ISO draft standard, and adopts some requirements that are dissimilar to those under consideration by the ISO. These are discussed below. Other differences with the draft ISO standard are discussed throughout this section (VII).

4. Bars May Not Be Attached to the Vehicle by Webbing Materials

The NPRM proposed to permit vehicle manufacturers to install ''semi-rigid'' anchorages in vehicles for the child restraint anchorage system. Semi-rigid bar anchorages refers to 6 mm bars that are attached by non-rigid material (webbing), extending from the vehicle seat bight. Semi-rigid bar anchorages basically look like the anchorages of the flexible latchplate system, except with a 6 mm round bar attached to the end of the webbing instead of a latchplate. The term ''semi-rigid anchorages'' is from the draft ISO standard (ISO/22/12/WG1, June 1998, Annex A), which permits vehicle manufacturers the option of installing semi-rigid bar anchorages as an interim alternative to the anchorages that are rigidly held in place. The draft ISO standard permits the use of semi-rigid bar anchorages for a limited period of time as an interim measure to address the concerns that had been expressed by some U.S. vehicle and child restraint manufacturers toward rigid bar anchorages. NHTSA's proposal allowed semi-rigid anchorages to harmonize to the extent possible with the version of the prospective ISO standard.

After reevaluating this issue, NHTSA has decided to require vehicle manufacturers to rigidly mount the 6 mm bars. Thus, bars may not be attached to the vehicle by webbing, as had been proposed. The agency made this decision to maintain better control over the compatibility between child restraints and the anchorage system. Requiring one type of attachment system on the vehicle (i.e., requiring the 6 mm bars to be rigidly mounted) better standardizes the vehicle anchorage system, which reduces the potential for confusion on the part of parents (who might be confused if they are looking for or expecting one type of anchorage system and come across another), and the misuse that typically results from confusion.[24] To determine whether a bar is ''rigidly'' mounted to the vehicle, this final rule specifies that the bar must be attached to the vehicle such that it will not deform (e.g., elongate, move, or deflect) when subjected to a 100 Newton (N) force in any direction. To further standardize the system, this final rule limits the length of the bars to not less than 25 mm, but not more than 40 mm. The upper limit is to reduce the likelihood that the bars may bend in a crash.

Even if NHTSA had decided to give vehicle manufacturers the option of installing non-rigidly mounted bars, it appears that they would not take advantage of that opportunity. Vehicle manufacturers supporting the rigid bar anchorage system did not indicate in their comments or other submissions that they would install non-rigid bar anchorages. NHTSA believes most, if not all, want to install the rigid bar anchorages. They emphasized what they believe to be superior side impact performance attributed to the rigid bar anchorage system, which can only be attained by use of a rigid system. They liked the fact that the rigid bar anchorage system did not give the appearance of ''clutter'' on vehicle seats from sets of child restraint anchorage belts and latchplates. Further, it appears that the provision for semi-rigid anchorages was included in the ISO draft standard to address what the working group believed was a desire to use such anchorages in this country. The Group of Experts on Passive Safety of the ECE stated in commenting on the NPRM that ''[t]here is no benefit in Europe opting for a semi-rigid system as an interim step.'' NHTSA understands this to mean that European manufacturers are not interested in installing semi-rigid anchorages as an interim step prior to the installation of rigid anchorages.

2. The Bars Must Be Visible or the Vehicle Seat Back Marked To Assist Consumers in Locating Them

While NHTSA has departed from its proposal in order to harmonize with revised location and visibility/marking requirements for rigidly-mounted anchorage bars in the draft ISO standard, the agency has not followed that draft standard in all respects. In the NPRM, the agency proposed location requirements for rigidly-mounted 6 mm bar anchorages. The location requirements were based on requirements developed in draft by the ISO working group in ISO/WD13216–1i, November 15, 1996. The NPRM proposed that the 6 mm diameter bars would be located using a child restraint fixture whose configuration and dimensions replicate a child restraint system. (The NPRM referred to the fixture as the ''child restraint apparatus.'' For convenience, and in response to VW's suggestion in its comment, this final rule uses the term ''child restraint fixture'' (CRF), which is the term used in the draft ISO standard.) The CRF would be placed on the vehicle seat cushion and against the seat back. Anchorage bars that are rigidly attached were proposed to be located 50 mm (about 2 inches) behind of the rearmost lower corner surface of the fixture (called point Z). They also must not be more than 120 mm from the H point of the seating position. (The H point is the mechanically hinged hip point of a

[23] Some commenters suggested that NHTSA require automatic retractors on child restraints that use webbing to attach the connector, such as child restraints using webbing to attach the connector to the rigid bar. NHTSA estimates that the consumer cost of a retractor would be $2.50 to $3 per retractor, or $5 to $6 per child restraint. To minimize the cost impacts of this rule, NHTSA has decided not to require automatic retractors on child restraints.

[24] Connectors on the *child restraint* are permitted to be attached by webbing, or they may be rigidly mounted. Design flexibility in attaching the connector to the child restraint enables child restraint manufacturers to better tailor their products to meet consumer demand, and reduces the cost impact on consumers purchasing child restraints.

manikin which simulates the actual pivot center of the human torso and thigh. See definition, 49 CFR § 571.3.)

In its June 1997 draft revision of the ISO standard, WG1 changed the rearward location requirement to specify that rigidly mounted bars shall be not more than 70 mm (2.7 in) behind point Z. (The limit on the forward placement of the bars was not changed.) This specification is reflected in the June 1998 draft standard. The distance for the fore-aft placement of the bars was increased from 50 mm to 70 mm (2 to 2.7 in) to make allowances for extremely contoured rear seats in some types of sport cars. Contoured seat cushions or seat backs in these vehicles may make it difficult to place the bars within 50 mm (2 in) of the CRF without having the bars be so far forward in the seat bight that they interfere with the comfort or safety of adult occupants.

Some commenters (Century, Gerry Baby Products, IMMI, Evenflo, and Cosco) were concerned about the visibility and accessibility of the bars at the seat bight. Other commenters pointed out that the ISO working group would be revising its draft standard and suggested that NHTSA should reference the location requirements of the revised draft standard.

After evaluating the comments, NHTSA has decided to adopt the limits on the forward (not more than 120 mm from the H-point of the seating position) and rearward (not more than 70 mm behind point Z) placement of the bars in the current draft ISO standard. The agency has determined that the 70 mm distance is needed to ensure that the bars are rearward enough in vehicles with contoured cushions to limit excessive head excursions for children in a crash [25] and to avoid injuring the person occupying the vehicle seat in a crash or interfering with his or her comfort during normal vehicle operation. At the same time, the agency is mindful of the concerns of child restraint manufacturers that the child restraint anchorage system must be visible and accessible to be properly used.

NHTSA believes that most vehicles, except those with highly contoured seats, will have the bars 50 to 60 mm (2 to 2.4 in) from the CRF. At this distance, the agency believes that the bars would generally be visible at the seat bight without compressing the seat cushion or seat back.

The final rule requires that vehicles in which the bars are not visible must have a permanent mark on the vehicle seat back at each bar's location. The permanent mark required by this final rule is a small 13 mm (½ inch) diameter circle in a color that contrasts with the seat material and that is located above each individual anchorage, to help users locate and use the bars. The mark will indicate the presence of the anchorage system and act as a guide showing where to engage the bars. Consumers may not otherwise learn of the existence of a child restraint anchorage system in a particular vehicle or at a particular seating position in a vehicle without some type of visual reminder that the anchorage system is present. Even when they know the bars are present, they may not know precisely where in the seat bight to look for the bars. NHTSA notes if vehicle manufacturers do not want to mark their seats for esthetic or cost reasons, they need not do so if they install the bars such that there is an unobstructed view of the bars at an angle of 30 degrees from a horizontal plane tangent to the seat cushion.

This visibility requirement is significantly different from the one that NHTSA proposed and somewhat different from the visibility requirement in the draft ISO standard. In the NPRM, NHTSA proposed that, for rigid bar anchorages, *inter alia*, at least one lower anchorage bar shall be readily visible to the person installing a child restraint. That proposal was based on the ISO draft version in existence at the time. The ISO working group changed those requirements in the June 1997 draft version to specify that, wherever possible, at least one lower anchorage bar, one guidance fixture, or one seat marking feature (significantly larger than the one specified in NHTSA's final rule) shall be readily visible to the person installing the child restraint. NHTSA has determined that the proposed visibility requirement for the bars would have likely precluded vehicle manufacturers from placing the bars at the maximum 70 mm distance from the CRF, since at that distance the bars may not be visible. As stated above, the bars may need to be placed at the maximum distance on extremely contoured seats for the safety and comfort of adult passengers seated in that seating position. Because of this, the agency is not adopting its proposal that at least one of the bars has to be visible.

The NPRM requested comments on whether the webbing attaching the anchorage hardware on the child restraint should be color coded to distinguish the webbing from the straps comprising the harness for the child. A number of commenters supported color coding, while others did not. The agency has decided not to require color coding of the attachment system at this time. The Insurance Corporation of British Columbia (ICBC) and IMMI report contrasting experiences with regard to the propensity of clinic participants to confuse the webbing attaching the buckles of the flexible latchplate system to the child restraint with the webbing of the child restraint's internal harness. NHTSA notes that intermixing appears to be far less likely with the rigid bar system than with the flexible latchplate system because the types of connectors used to attach to the rigid bars are not likely to look like the buckles used for the child restraint harnesses.

3. A Tether Anchorage Is Not Required by the Draft ISO Standard, but Is Required by This Final Rule

The NPRM proposed to require user-ready top tether anchorages in vehicles. The draft ISO standard does not at this time include a provision for tether anchorages. Some supporters of a rigid system on both vehicles and child restraints believe that some restraints made to attach to the vehicle by means of a rigid attachment can meet a more stringent head excursion limit without a tether.

Test data show that an attached tether substantially improves the ability of a child restraint to protect against head impacts in a crash, when the child restraint is attached to the vehicle seat by the belt system or by a flexible latchplate anchorage system. In the U.S., parents have not attached the tethers in vehicles that lack a user-ready tether anchorage. However, Canada's experience indicates that parents are more likely to attach the tethers when a user-ready tether anchorage is factory-installed. Overall, commenters to the NPRM agreed with the agency that consumer-ready tether anchorages in vehicles are needed to increase the likelihood that consumers will attach a tether. For these reasons, and because a large proportion of child restraints will likely be attached to the child restraint anchorage system by webbing material, NHTSA believes there is good reason to require a user-ready tether anchorage in vehicles. The agency notes that the requirement for a user-ready tether anchorage will harmonize with Canadian requirements adopted in September 1998.

f. The Types of Vehicles That Are Subject to the Adopted Requirements

The NPRM proposed to apply the requirement for a child restraint anchorage system to passenger cars, and

[25] For a discussion of the interaction of child restraints and forward-mounted anchorages, see the NPRM, 62 FR at 7859, columns 1–2.

to trucks, multipurpose passenger vehicles and buses under 4,536 kg (10,000 lb) gross vehicle weight rating (GVWR). The agency had tentatively decided to include vehicles with a GVWR between 3,856 and 4,536 kg (8,500 and 10,000 lb) in an effort to ensure that such a child restraint anchorage system would be available in vehicles used to transport children to child care programs.

Commenters on the proposed applicability of the rule discussed whether there was a need to apply the rule to all vehicles above 3,856 kg (8,500 lb) GVWR. The Automotive Occupant Restraints Council (AORC), GM and Chrysler believed that the requirement should not apply to vehicles above 3856 kg (8,500 lb) because most vehicles in the 3856 to 4536 kg (8,500 to 10,000 lb) category are for commercial applications other than passenger transport. AORC said that if NHTSA wishes to apply a rule to vehicles above 3,856 kg (8,500 lb) to regulate vehicles used for child care programs, the agency should apply the rule to school buses and not to all vehicles greater than 3,856 kg (8,500 lb).

The Mobile Teaching School Bus Project of Indiana University commented that a final rule should also apply to large school buses (over 4,536 kg (10,000 lb) GVWR) to address issues relating to the transportation of infants, toddlers and preschoolers on school buses. The American Academy of Pediatrics also said that all school buses should be subject to the rule. In contrast, the Lake Cumberland Head Start expressed concern that applying the rule to school buses would ''skyrocket the cost of a new bus'' and could have a very detrimental effect on the Head Start program budget. The National Association of State Directors of Pupil Transportation Services expressed concern whether the agency would be justified in applying the rule to school buses. Chrysler questioned whether the proposed rule would be appropriate for school buses, believing that a requirement for only two child restraint anchorage systems ''would hardly meet the needs of the users.'' Chrysler said that anchorage systems could be specified as a matter of contract on the part of individual school bus purchasers.

After reviewing the comments, NHTSA has decided to limit the applicability of the rule to passenger cars and to MPVs and trucks with a GVWR of 3,856 kg (8,500 lb) or less, and to buses (including school buses) with a GVWR of 10,000 lb or less. The agency is not applying the rule to other vehicles with a GVWR in the 3,856 to 4,536 kg (8,500 to 10,000 lb) range because most vehicles in that range typically do not carry child restraints. The agency is not applying the rule to school buses with a GVWR greater than 4,536 kg (10,000 lb) because this was not proposed, and the agency has not had the benefit of full and meaningful comment on this issue.

Buses with a GVWR of up to 4,536 kg (10,000 lb) are included in the final rule because they are regularly used to transport children small enough to be in child restraints. Chrysler believed that a requirement that specifies only two child restraint anchorage systems on buses used to transport children to child care programs would not meet the needs of the care givers. NHTSA urges purchasers who anticipate that they will be needing more than two child restraint systems in their vehicles to order their vehicle with the additional child restraint anchorage systems necessary to meet their needs. The agency has drafted this final rule to apply the standard's configuration, location, strength and marking requirements to any additional voluntarily-installed rigid bar anchorage system installed on a new school bus, or on any other vehicle. This is to ensure that children will be provided the same high level of crash protection no matter which particular child restraint anchorage system they may be using at the time of a crash. The configuration, location, strength and marking requirements will apply to any rigid bar anchorage system installed on a new vehicle beginning September 1, 1999.

g. The Number of Anchorage Systems That Are Required in Each Vehicle

In the NPRM, the agency proposed to require a child restraint anchorage system at each of two rear seating positions. The NPRM did not specify which rear seating positions would have had to be equipped with the anchorage systems. As a practical matter, manufacturers were likely to install the anchorages in the two outboard positions because the anchorages could best fit there in most passenger cars. It would be difficult to fit anchorage systems side-by-side, e.g., in the center rear seat and at an adjacent outboard seat in small vehicles. The agency requested information from commenters on whether there is information indicating a need for an anchorage system at more than two positions, such as demographic data on the number of children who are typically transported in child restraints in a family vehicle.

Many commenters addressed the issue of how many seating positions should have a child restraint anchorage systems. Most of them recommended that either all rear seating positions in cars should be so equipped, or at least an additional (i.e., third) tether anchor should be required. Presumably, as a practical matter, the additional tether would be installed in the rear center position. A few commenters submitted demographic data to support their position that more than two anchorage systems are needed in vehicles. However, these data did not show that there were a significant number of families with three or more children in child restraints. To minimize the cost of this rule, this rule adopts the proposal for two full child restraint anchorage systems.

However, NHTSA is requiring that if a vehicle has at least three designated seating positions in the rear seat or second and third row of seats, another seating position, other than an outboard position, shall be equipped with a user-ready tether anchorage. This requirement addresses the concerns of many commenters that the center rear seating position in cars would not have an improved means of attaching child restraints, even though that is the position preferred by many adults to place a restraint. In the typical family car with three rear seating positions, the center rear seating position would thus have a tether anchorage in addition to the lap belt (and in more and more cars, a lap and shoulder (Type II) belt), to give consumers flexibility in where they choose to restrain their children. NHTSA is not requiring that one of the two independent anchorage systems be placed in the rear center position in a vehicle having such a seating position because, as explained above, it may be difficult to fit the lower anchorages of two child restraint anchorage systems, or two child restraint systems, adjacent to each other in the rear seat of small vehicles.[26] The final rule also requires that, in vehicles with three or more rows of seating positions, at least one child restraint anchorage system must be at a seating position in the second row. Some parents may want to place the child restraint in the second row rather than further back in the vehicle to comfort or supervise the restrained child from a closer distance. This requirement ensures that a child restraint anchorage system will be available in the second row to such a parent.

[26] NHTSA is allowing manufacturers to install one built-in child restraint system in lieu of one of the required tether anchorages or one of the required child restraint anchorage systems. A built-in child restraint system is a child restraint system that is a permanent and integral part of the vehicle. See S4, 49 CFR § 571.213.

To better ensure that a vehicle's designated seating position and child restraint anchorage system on that seat will be able to fit a child restraint, this final rule requires the vehicle to be designed such that the CRF can be placed inside the vehicle and attached to the lower anchorages of the child restraint anchorage system. If the CRF cannot attach to the child restraint anchorage system, the vehicle cannot be certified as meeting Standard 225, the standard adopted today for child restraint anchorage systems. When testing for compliance with this requirement, NHTSA will place adjustable seat backs in the manufacturer's nominal design riding position in the manner specified by the manufacturer. The nominal design riding position should be the same position that the manufacturer recommends in its instructions to parents. Adjustable seats will be adjusted to their full rearward and full downward position.

This final rule requires that any tether anchorage or child restraint anchorage system installed in a new vehicle must meet the configuration, location and strength requirements of the standard. This requirement applies to voluntarily-installed anchorages that are installed in a new vehicle in addition to those required by the standard. This is to better ensure that the anchorages will perform adequately and that a child will be assured a requisite level of performance no matter which tether anchorage or child restraint anchorage system is used. These requirements will apply to any child restraint anchorage installed on a new vehicle beginning September 1, 1999.

h. Lockability Requirement Will Be Retained Until 2012

The NPRM requested comment on whether the ''lockability'' requirement in S7.1.1.5 of Standard No. 208, ''Occupant Crash Protection'' (49 CFR 571.208) should be deleted as unnecessary if requirements for a child restraint anchorage system are adopted. The agency wished to explore whether a lockability requirement may not be needed for a seating position with a universal anchorage system since the vehicle's belt would no longer be used to attach a child restraint with attachment devices. On the other hand, the agency also recognized that lockability might be needed to attach child restraints that are not equipped with attaching devices, even if the vehicle seat has such a system.

Graco, SafeRide News, AORC, GM, Indiana University, Advocates, Ford, Chrysler and the Center for Auto Safety commented on this issue. All of these commenters said that vehicle seats with a child restraint anchorage system should still be subject to the lockability requirement to meet the needs of parents using a child restraint that is not equipped with attachment devices. GM and Ford suggested that lockability could be deleted some time after all child restraints are equipped for the child restraint anchorage system.

The agency agrees that the lockability requirement should be retained until virtually all child restraint systems in use have the attachments that connect the restraint to the child restraint anchorage system. Until then, the vehicle belts should be lockable to use with a child restraint that is not equipped with attachment devices. The agency believes that, on average, child restraints are used not more than 10 years. Under today's rule, all new child restraints will be required to have attachments that connect to the child restraint anchorage system beginning in 2002. Because child restraints last on average about 10 years, by 2012, most child restraints in use will be able to use the child restraint anchorage system and will not need lockable belts. This rule rescinds the lockability requirement beginning September 1, 2012. The requirement is rescinded on that date for just those seating systems with a child restraint anchorage system, and not for all seats.

GM and Ford also suggested that the lockability requirement be deleted for the air bag equipped right front passenger seat, in light of the NPRM's proposal to disallow a child restraint anchorage system in that position in vehicles that lack an OE on-off switch for the air bag. NHTSA has decided not to delete the requirement at this time. Notwithstanding the efforts of the agency, industry, State and local officials and safety advocates to urge parents to place children in the rear seats, some parents may decide to place toddler seats in the front passenger seat with an air bag, or with an air bag and an on-off switch. In that situation, the lockability of the lap and shoulder belts would help ensure that the belt holds the child restraint system as tightly as possible against the seat back of the front seat, as far away as feasible from the air bag and the relatively hard structure of the dashboard. Lockable belts may be distinguished from a standardized, independent anchorage system in that the presence of the latter implies, more than a lockable belt whose lockability feature is not obvious, that the seat is appropriate for a child restraint system. This may not be the case if an air bag is present.

On September 18, 1998, NHTSA published an NPRM proposing to upgrade the agency's occupant protection standard to require advanced air bags (63 FR 49958). The agency proposed to add new requirements to prevent air bags from seriously injuring children and other occupants. When the final rule on that rulemaking is issued, NHTSA will possibly delete the requirement in today's final rule that an independent child restraint anchorage system must not be in the front seat of a vehicle that lacks an OE on-off switch and the related requirement concerning the lockability provision applying to that seating position. This issue will be addressed at the appropriate time in the context of that rulemaking.

i. Strength Requirements for Lower Rigid Bars of Child Restraint Anchorage System and Compliance Test Procedures

In the NPRM, the agency proposed that each lower anchorage would be tested separately by applying a force of 5,300 N (1,190 lb) to the anchorage in the forward horizontal direction parallel to the vehicle's longitudinal axis. The force would be applied by means of a belt strap that is fitted at one end with hardware for applying the force and at the other end with hardware for attaching to an anchorage or connector. The agency proposed that the force would be applied so that the 5,300 N (1,190 lb) force is attained within 30 seconds, with an onset rate not exceeding 135,000 N (30,337 lb) per second, and would be maintained at the 5,300 N (1,190 lb) level for at least 10 seconds. The NPRM would have specified that when tested in this manner, no portion of any component attaching to the lower anchorage bars shall move forward more than 125 mm (5 inches), and that there shall be no complete separation of any anchorage component. The test procedure and force levels were based on suggestions from petitioners AAMA *et al.* on the flexible latchplate anchorage system.

GM and Ford suggested that loading all three anchorages at one time (the two lower anchorages and the top tether anchorage) is the most appropriate method to evaluate in a static load test how a child restraint will perform dynamically in limiting forward excursion. GM recommended using a fixture, representing a child restraint, in the static pull test. GM believed that use of the fixture more accurately depicts how the child restraint will perform in a crash. The fixture would be attached to the lower anchorages and to the top tether anchorage, and pulled. Ford also recommended using a fixture that

represents the geometry of a child restraint system. Ford recommended using the ISO draft test procedure, which uses a fixture called a ''Static Force Application Device (SFAD).'' Ford believed that the ISO fixture applies forces on the anchorages that are higher than the forces applied to the fixture, because it applies realistic vertical forces in addition to the horizontal forces. Ford suggested applying force to the test fixture at 10 degrees above the horizontal (as in Standard No. 210, *Seat Belt Anchorages,* 49 CFR 571.210) to replicate the effect of pre-impact braking and vehicle pitching during a crash.

NHTSA has evaluated the above comments regarding the proposed procedure for testing the lower anchorage system. The agency agrees with the commenters' suggestion that it should use a fixture for testing the lower anchorages. The agency believes that the forces of a crash are simultaneously applied to all anchorages and not to one anchorage at a time. Because of this, it is the agency's belief that using a fixture that represents a child restraint system better simulates the conditions of a crash. However, the agency will not attach a top tether anchorage when testing the lower anchorages. Not attaching the tether anchorage is consistent with the draft test procedure being developed by the ISO working group for the rigid bar anchorage system. This is also consistent with the agency's objective to ensure that the child restraint anchorage system will retain the child restraint system in the event that the tether is misused or not used at all.

This final rule adopts the SFAD test fixture specified in the draft ISO standard for testing the strength of the rigid bars and adopts aspects of the test procedure proposed in the NPRM. The SFAD engages the vehicle's rigid bars with rigidly attached connectors replicating, in placement and design, the connectors on a child restraint. The SFAD is not connected to the tether anchorage. A reference point on the SFAD (designated ''Point Y'' on the device) is used to determine compliance with the strength requirements. When a test force is applied to the rigid bars by pulling on the SFAD at a point that is approximately midway from the top of the device, the child restraint anchorage system shall not allow Point Y on this SFAD to be displaced more than 125 mm (5 inches).[27]

Several commenters addressed the adequacy of the force levels proposed to be applied to the anchorages. The NPRM proposed to require that a 5,300 N (1,191 lb) force be maintained for 10 seconds. Gerry Baby Products asked whether the 5,300 N static load is sufficiently high to ensure adequate performance in a crash. Gerry said it has measured dynamic loads in excess of 5,300 N. Indiana Mills and Manufacturing Inc (IMMI) also commented that the proposed force of 5,300 N is lower than what they experienced in dynamic testing. The Roads and Traffic Authority (RTA) of New South Wales commented that in designing tether anchorages, the Australian Design Rule requires that the anchorages sustain a 3,400 N (764 lb) static load. It said, however, that they record dynamic loads well above this in sled testing.

NHTSA has determined that the strength requirements proposed in the NPRM are generally high enough to ensure that the lower anchorage system will be able to withstand the loads generated by a child in a child restraint in a crash. This final rule specifies a forward load of 11,000 N, using a fixture that applies the load to both lower anchorages simultaneously (and not to the tether anchorage).[28] The 11,000 N forward load is similar to the 10,600 N load that was proposed in the NPRM for testing the strength of the lower anchorages (5,300 N applied to each lower anchorage).

The 11,000 N forward load requirement is supported by test data conducted by Transport Canada. Canada performed 48.3 km/h (30 mph) dynamic testing of a 6-year-old (48 lb) child dummy in a (17 lb) booster restraint that was attached to the vehicle seat assembly by the rigid lower bars of a child restraint anchorage system. Dynamic loads recorded at one lower bar was approximately 5,500 N, resulting in a combined dynamic load of about 11,000 N. There is a margin of safety incorporated into the adopted strength requirement by way of the method by which the 11,000 N static load is applied to the anchorages, which is discussed below with regard to the static load onset and hold periods.

As to why NHTSA believes test data on the 6-year-old (48 lb) dummy are pertinent, child restraints are increasingly marketed for children of older ages and higher weights. Recent statements by several child restraint manufacturers indicate that some of their child restraint systems are currently being offered for sale for children weighing up to, and in some cases more than, 60 lb. (A copy of these statements has been placed in NHTSA Docket 74–09 General Reference.) These restraint systems are primarily belt-positioning boosters, which are a type of child restraint booster seat regulated by Standard 213.

While belt-positioning boosters use the vehicle's lap and shoulder belts (Type II belts) to restrain the child, many belt-positioning boosters are also designed for dual use as a toddler restraint. (A toddler restraint is a forward-facing child restraint system, generally recommended for children weighing 30 to 40 lb, that has its own internal harness to restrain the child, and is dependent on the vehicle's anchorage system to connect the child restraint to the vehicle seat. The harness is designed to be removed by the consumer when the child restraint is to be used with a vehicle's Type II belt as a belt-positioning booster.) Under today's final rule, toddler restraints must be designed to attach to the rigid bar anchorage system of the vehicle. Toddler restraints restraining children weighing up to 40 lb will impose the forces generated by these children on the rigid bars. In addition, in a misuse case, where a parent restrains a child weighing more than 40 lb in a booster that is in the toddler restraint mode, the loads could be higher. There is also substantial interest, which NHTSA shares, in the possibility of designing toddler restraints to accommodate children heavier than 40 lb. One tethered child restraint is currently sold in Canada for use by children with a maximum weight of 48 lb, and this trend may occur in the U.S.[29] Given that a child restraint anchorage system would be used with children with weights up to and possibly more than 40 lb, basing the strength requirement of the lower anchorages on forces generated by the 6-year-old dummy best ensures that the anchorages will be able to withstand the loads generated by a child in a crash.

[27] This final rule refers to the SFAD of the ISO draft standard as ''SFAD 2.'' SFAD 2 is also used to test tether anchorages at seating positions that are equipped with a full child restraint anchorage system (i.e., with the rigid lower anchorage bars and the tether anchorage). This final rule also refers to a fixture, called ''SFAD 1'' in this rule, to test tether anchorages at seating positions that do not have a full child restraint anchorage system. SFAD 1 is attached by way of the tether anchorage and the vehicle's seat belt system.

[28] This rule also includes a lateral load of 5,000 N (1,124 lb). The 5,000 N is the lateral load specified in the draft ISO standard.

[29] NHTSA has granted a December 4, 1997 petition for rulemaking from Kathleen Weber asking NHTSA to amend Standard 213 to permit manufacturers to design booster seats with a top tether and to attach the tether during compliance testing with a 48 lb dummy. If adopted, the requested amendment would likely result in manufacturers designing booster seats for children weighing up to and possibly more than 45 lb.

The agency realizes that the 11,000 N static load requirement results in a more severe load than the 11,000 N load generated in Transport Canada's dynamic test. It is considered to be more severe because this final rule adopts the specifications of the NPRM concerning the periods for attaining and holding the required loads. The NPRM proposed that the force be applied to each anchorage within 30 seconds, with an onset rate not exceeding 135,000 N per second, and maintained for 10 seconds. While the 11,000 N static load may be more demanding than a 11,000 N dynamic load in this instance, it ensures that the child restraint anchorage system will perform adequately under most crash conditions, with (as explained above) a wide range of children. NHTSA is not aware of test data that justifies reducing the margin of safety afforded by the 11,000 N static load requirement.

The agency also realizes that the 11,000 N static load requirement of this final rule differs from the draft ISO standard, which specifies a static load requirement of 8,000 N. NHTSA is unaware of the basis for the 8,000 N requirement. There are no test data that NHTSA is aware of that justify setting the requirement at 8,000 N.

With regard to the proposed force application and hold periods, Ford commented that the periods are unrealistically long, and not harmonized with European anchor test regulations and practices. Ford believed that the European periods for attaining and holding the test force would be more representative of real world crash situations. Further, the commenter stated, the proposed force application period of 30 seconds reflects forty-year-old test equipment technology, whereas current state-of-the-art test equipment can apply the test loads in less than 1 second. Ford stated that it supports the load attainment and hold specifications of the ISO draft standard, which specify a test force application period of 2 seconds and hold period of 0.25 seconds.

The force attainment and hold requirements of today's final rule for the lower anchorages are based on Standard 210 and the NPRM. Standard 210 sets strength requirements for vehicle seat belt anchorages. Because today's child restraint systems are secured to the vehicle seat by way of the vehicle's seat belts, which are anchored to the vehicle by the seat belt anchorages, Standard 210's strength requirements establish the level of performance that the current anchorage system for child restraint systems must meet.

The issue of whether Standard 210's force attainment and hold requirements should be harmonized with European regulations has been considered on several occasions by NHTSA. (*See, e.g.,* 55 FR 17970, April 30, 1990.) In deciding against such an action, the agency acknowledged that the Standard 210 loading conditions are orders of magnitude greater than the corresponding time periods observed in crashes (total loading time for seat belts from about 0.10 to 0.15 seconds, load holding time less than 0.005 seconds). However, the agency believed that the Standard 210 provisions are intended to be sufficiently demanding to ensure that the anchorage will not fail even under the most severe crash conditions. The agency decided against reducing the ''margin of safety'' currently required for anchorage strength by Standard 210.

Commenters have not raised new information that warrants changing the established method for testing the vehicle anchorage system used to secure child restraint systems or reducing the margin of safety provided by the established method. Accordingly, the test force application and hold requirements in the NPRM are adopted in this final rule.

This final rule specifies how NHTSA will test multiple child restraint anchorage systems installed on a vehicle seat. This rule specifies that, in the case of vehicle seat assemblies equipped with more than one child restraint anchorage system, at the agency's option, each child restraint anchorage system may be tested simultaneously or sequentially. Simultaneous testing is to ensure that the anchorage systems will be strong enough to withstand the forces generated on them in the event all are in use at the time of the crash. Sequential testing may, at the agency's option, include testing one system to the forward load requirement and testing another system to the lateral load requirement. Such testing reduces the number of test vehicles that NHTSA will need to acquire for its compliance program and enables the agency to better manage its available resources. However, this rule also specifies that a particular child restraint anchorage system need not meet further requirements after having met either the forward load or either lateral pull requirement, tested to any of these requirements at the agency's option. The agency believes that in a real world crash, the anchorage system is not likely to be exposed to the magnitudes of both directional loads. Yet, because the anchorage system is subject to either the forward or lateral loads in a compliance test, manufacturers have to design and manufacture the system such that it will meet both performance criteria.

With regard to adjustment of a vehicle seat in the compliance test, adjustable seats are placed in their full rearward and full downward position and the seat back in its most upright position. These adjustment positions are the same ones specified in the NPRM and adopted by this final rule for testing tether anchorages, which had been based on the adjustment positions specified by Transport Canada in its final regulation on user-ready tether anchorages. NHTSA has considered requiring that adjustable seats be adjusted in any horizontal or vertical position, any seat back angle position and any head restraint adjustment position, to be able to test seats in all possible positions that consumers may use them in the vehicle. The agency did not adopt such a requirement out of concerns about the adequacy of notice for such a requirement. However, NHTSA believes that testing in all adjustment positions may be worthwhile and may propose to adopt such a requirement in the future.

Several commenters suggested that the seat back of the standard seat assembly used in compliance tests of child restraints be fixed instead of flexible. This issue was addressed in a previous action (see 59 FR 12225, March 16, 1994). NHTSA determined that a flexible seat back does not lessen the stringency of the compliance test, as concerned parties had believed. No new information is available to warrant the agency's reconsideration of this issue at this time.

j. Requirements for Child Restraints

In the NPRM, the agency proposed to require all child restraints, other than belt-positioning seats, be equipped with components that are compatible with the proposed standardized, independent anchorages for motor vehicles. The agency did not propose to include belt-positioning seats. They do not have compatibility problems because they use a vehicle's lap and shoulder (Type II) belt system to restrain the child occupant. Commenters did not urge their inclusion. NHTSA reiterates, however, that if a child restraint system is designed for use both as a belt-positioning seat and as a toddler seat (e.g., with its own internal harness), the restraint system is required to have attachments connecting to a child restraint anchorage system.

Several commenters addressed the requirements that would apply to infant-only restraints with detachable bases. Graco requested confirmation that only the base would be required to have the permanently attached components. Ms. Weber of the UMCPP believed that two-piece infant restraints should be

required to have the attachment hardware on both pieces to avoid the possibility of being unable to attach the infant seat/carrier by means of the standardized, independent anchorage system when the seat/carrier is used by itself (i.e., without the base). NHTSA believes that only the base of rear-facing child restraints with detachable bases need have the permanently attached components. To keep cost impacts of the rule as low as possible, the agency is not requiring both pieces to have the components.

This rule also excludes harnesses from the requirement. Harnesses are excluded out of concerns about practicability. Not enough is known as to whether connectors attaching to the rigid bars can be attached to a harness. These child restraints may not have a structural member that is strong enough to which the connectors may be attached.

The NPRM would have required each child restraint to have components that securely fasten the child restraint to the flexible latchplates. The NPRM specified that if a child restraint were also designed to attach to the rigid bars, the child restraint had to use a specific design for the connector. The connector was based on a jaw-like clamp referenced in the ISO draft standard.

Commenters urged NHTSA not to specify the design of the connector that child restraints had to use. As explained above in section VII.d.2., child restraint manufacturers said that hooks, buckles or other types of connectors could and would be used to attach to the 6 mm bar anchorages. As also explained in section VII.d.2., the agency views the design flexibility of the rigid bar anchorage system to be an advantage over any other system and is thus not requiring a specific connector on the child restraint to attach to the vehicle's rigid bars.

This final rule includes a requirement that the child restraints, other than those using hooks to attach to the lower anchorages of a child restraint anchorage system, must provide a visual or audible indication that the two attachments to the rigid bars are fully latched. The visual indication must be detectable under normal daylight lighting conditions. A visual indicator was suggested by the ISO working group in draft standard ISO/DIS 13216–1 and by Transport Canada in NHTSA's October 1996 public meeting. A positive indicator was also favorably received by the participants in the April 1998 AAMA/AIAM consumer clinic. The participants (90 percent) stated that the ''clicking sound'' and ''green indicators'' made them confident that the child restraint was securely installed.

k. Performance and Testing Requirements for Tether Anchorages

Overall, commenters strongly supported the proposed requirement for providing user-ready top tether anchorages in vehicles. Commenters strongly supported NHTSA's effort to harmonize its user-ready tether anchorage requirements with what was then a Canadian proposal for upgrading that country's tether anchorage requirement by requiring user-ready tether anchorages. (That proposal has since been adopted by Canada in revised form.)

Most of the vehicle manufacturers raised issues concerning the proposed test procedure evaluating the strength of the user-ready anchorage. The agency proposed that the user-ready tether anchorages would be tested by attaching a strap to the anchorage that passed over the seat back. This is the test procedure currently required by Transport Canada for testing non-user-ready tether anchorages (i.e., the reinforced anchorage hole) in passenger cars. It was also the procedure proposed by Transport Canada to test user-ready anchorages in vehicles. However, when load was applied by the strap, manufacturers found that the seat back on some MPVs and trucks deformed extensively due to the location of the tether anchorage on the floor or on the seat itself. Transport Canada explains in its Regulatory Impact Analysis Statement for the September 30, 1998 final regulation publication:

> While [the strap-based test method] is acceptable for passenger cars, whose tether anchorages are located in the shelf behind the second row of seats, it can cause extensive deformation of the seat back for hatchbacks, MPVs, and trucks, whose anchorages are usually located on the floor or on the seat itself. The seat back deformation changes the direction of the load, which renders the test inaccurate as a simulation of the forces that act on tether anchorages in actual collisions.

Many vehicle manufacturers commenting on NHTSA's NPRM suggested that the test procedure be changed to use a test fixture that would direct the loads without interference with the seat back. Chrysler suggested directing the force over a round bar instead of directly going over the top of the seat back. All of these commenters made the same suggestions to Transport Canada on its proposed rule.

NHTSA has determined that the proposed procedure did in fact result in seat back deformations that interfered with the evaluation of the strength of the tether. The straight-pull force application proposed in the NPRM directs the force in a line of action that interferes with the top of the vehicle seat. Transport Canada has made the same determination.

In response to the comments it received, Canada made extensive changes in its final regulation. Canada consulted with manufacturers on the testing problems that occurred due to the use of a strap and conducted substantial testing to evaluate and address the problems. Transport Canada solved the problem by using, among other things, a test fixture to direct the test loads. The test fixture replicates the geometry of a child restraint system. Canada determined that the load could be applied to the tether anchorage by way of a fixture, without deforming the vehicle's seat back.

Two different fixtures are specified in the Canadian regulation. A fixture, developed by GM, is used to test a tether anchorage at a seating position that does not have the rigid bar anchorage system. The fixture developed by WG1 (''SFAD 2,'' see section VII.i., above), is used to test a tether anchorage at a seating position that has a rigid bar anchorage system. Incorporation of the ISO SFAD by Canada reflects that country's intent to undertake rulemaking to require the rigid bar child restraint anchorage system in vehicles. Under the Canadian regulation, the appropriate fixture is attached to the tether anchorage by a tether strap and attached to the vehicle seat by the rigid bars or the vehicle seat belts. A test force of 10,000 N (2,248 lb) is applied to the fixture, which in turn distributes loads to the tether and lower anchorages. The Canadian regulation requires the tether anchorage to ''withstand'' the requisite load.

NHTSA has incorporated use of the fixtures into its test procedure. The fixture that will be used to test a tether anchorage at a seating position that does not have the rigid bar anchorage system is referred to as ''SFAD 1.'' The lower portion of SFAD 1 is attached to the vehicle seat by way of the vehicle's seat belts. The fixture that will be used to test a tether anchorage at a seating position that has a rigid bar anchorage system is referred to as ''SFAD 2'' (see also section VII.i., above, which describes use of SFAD 2 to test the rigid bars of a child restraint anchorage system). NHTSA has determined that the test fixtures are sufficiently representative of child restraint systems sold in this country. The fixtures distribute the forces generated in a crash in a manner similar to the distribution of forces by child restraints observed in dynamic crash testing. NHTSA has

based this conclusion on data from tests performed by Canada with the two fixtures. (A copy of the data has been placed in the docket.)

Both SFADs specified in this final rule have a tether strap that attaches to the vehicle's tether anchorage. The tether strap consists of webbing that must meet the breaking strength and elongation limits for lap belt (Type I) assemblies, specified in Standard 209, ''Seat Belt Assemblies'' (49 CFR 571.209). Type I belts are required to meet higher performance requirements for braking strength and elongation than other types of seat belts. The agency has used the requirements for Type I belts because NHTSA believes that the webbing used for the tether strap must be strong enough to transmit the loads to the tether anchorage in a compliance test.

The proposal would have required the same strength requirements that Canada applies now to (non-user ready) reinforced holes for tether anchorages, i.e., a 5,300 N (1,124 lb) force, attained within 30 seconds and held at the 5,300 N level for one second. This final rule has increased this to 15,000 N to reflect the use of the fixture in testing tether anchorages. In addition, the agency has determined that the 15,000 N force level is high enough to ensure that the anchorage will withstand the loads generated by children in forward-facing restraints.

This determination is based on test data from Transport Canada. Canada conducted 30 mph dynamic tests of a CANFIX prototype child restraint (weighing 32 lb) using a 3-year-old (33 lb) dummy and found dynamic loads of about 3,500 N and 4,000 N on the tether anchorage (loads on the lower attachments ranged from 3,000 N to 4,000 N). It also dynamically tested a 3-year-old dummy in a child restraint attached to the vehicle seat assembly by way of a lap belt and tether, and found a dynamic load of about 5,800 N on the tether anchorage (loads on the belt anchorages were about 1,500 N). Transport Canada determined that a static test pull force value of 14,000 N (applied to three anchorage points by way of a fixture) replicates the dynamic test forces that was imposed on the lower anchorages in the CANFIX test. (These data from the Canadian tests have been placed in the docket.) NHTSA realizes that the data was based on tests with a 3-year-old (33 lb) dummy and that children heavier than 33 lb might be in a tethered child restraint. However, the CANFIX prototype restraint used in the Canadian tests weighed 32 lb, which is heavier than child restraints likely to be produced for the rigid bar attachment system. (The child restraint that Britax has produced weighs 17 lb.) Thus, NHTSA believes that the data generated in the Canadian tests represent loads that would be generated by children heavier than 33 lb, restrained in tethered child restraints weighing substantially less than 32 lb. NHTSA believes that the 15,000 N load requirement adopted in this rule will ensure that tether anchorages perform acceptably in a crash for the range of children likely to use the tether, with an acceptable margin of safety.

The force attainment and hold requirements for testing the lower anchorages of a child restraint anchorage system are adopted, as proposed. NHTSA recognizes that the one second hold period contrasts with the agency's 10-second hold period specified in this final rule for the lower anchorages. Unlike the situation for the lower anchorages, there is no tether anchorage requirement in the U.S., so there is no ''reduction'' of an established safety level (unlike the situation vis-a-vis the lower anchorages and Standard 210). Further, a higher margin of safety for the lower anchorages is needed because these anchorages would bear all the crash forces in case of misuse (or nonuse) of the tether attachment.

This rule specifies the manner in which NHTSA will test multiple tether anchorages on a vehicle seat. In the case of a row of designated seating positions that has more than one tether anchorage, the test force may, at the agency's option, be applied simultaneously to each tether anchorage. This is to ensure that the tether anchorages will be strong enough to withstand the forces generated on them in the event all are in use at the time of the crash. This rule also specifies, however, that a particular tether anchorage (test specimen) need not meet further requirements in a compliance test if that particular tether anchorage is part of a child restraint anchorage system and the lower anchorages of the system were previously tested to and met this standard's requirements for the strength of the lower bars (S9.4 of 49 CFR 571.225). The agency believes that the lower bars may have been sufficiently weakened in the earlier compliance test that they may fail when tested again.[30]

This final rule also adopts Canada's provisions specifying where the tether anchorage must be located. Based on tests performed by Transport Canada child restraints tethered near the limit of the location zones performed very well. (A copy of the data has been placed in the docket.) Australia's Federal Office of Road Safety (FORS) and RTA commented that the proposed zone, which was harmonized with Canada's zone, allows more leeway in the lateral placement of the tether anchor fittings than the Australian standard. It said some vehicles that meet the Canadian standard were displaced laterally more than 110 mm (4.3 inches) from the reference plane. NHTSA has reviewed the Canadian and FORS zones and believes that the Australian requirements specifies a zone that may be narrower than needed for the tether anchorage. Transport Canada performed 48.3 km/h (30 mph) dynamic tests with varying angles of the tether strap. In those tests, head excursion, acceleration and tether loads were measured. The results of the tests showed that these measurements were unaffected by the anchorage location.

GM stated that the proposed Figure 4 requirement eliminates a small area from the zone currently allowed in the Canadian standard. This results in a few models of passenger cars having anchorages located within the current Canadian standard zone, but not in the proposed zone. GM included a corrected view requirement in its comment. Canada has also determined that a number of MPV models already position tether anchorages in the zone that is currently specified for passenger cars. Canada has agreed to revise the proposed zone to avoid unnecessary redesign of the affected vehicles. Similar to Canada's final regulation, this final

[30] Transport Canada has also determined that manufacturers of passenger cars should be permitted the option of testing tether anchorages by way of a strap passing over the seat back, until September 1, 2004. This is because existing lines of passenger cars have been certified as meeting Canada's current tether anchorage (hole) requirement using the strap method. NHTSA is also permitting this option to avoid imposing a need on manufacturers to retest their vehicles using the new test method. However, NHTSA notes that, where a safety standard provides manufacturers more than one compliance option, the agency needs to know which option has been selected in order to conduct a compliance test. Moreover, based on previous experience with enforcing standards that include compliance options, the agency is aware that a manufacturer confronted with an apparent noncompliance for the option it has selected (based on a compliance test) may respond by arguing that its vehicles comply with a different option for which the agency has not conducted a compliance test. This response creates obvious difficulties for the agency in managing its available resources for carrying out its enforcement responsibilities, e.g., the possible need to conduct multiple compliance tests for first one compliance option, then another, to determine whether there is a noncompliance. To address this problem, the agency is requiring that where manufacturer options are specified, the manufacturer must select the option by the time it certifies the vehicle and may not thereafter select a different option for the vehicle. This will mean that failure to comply with the selected option will constitute a noncompliance with the standard regardless of whether a vehicle complies with another option.

rule permits manufacturers of passenger cars and MPVs to locate the user-ready tether anchorage in the existing zone until September 1, 2004, when changes to the previous vehicle designs can be implemented with little or no cost.

A number of commenters pointed out that, while the NPRM proposed a requirement that vehicle manufacturers must equip vehicles with an anchorage that permits the attachment of a tether hook meeting the configuration and geometry specified in a proposed Figure 11 that was to have been incorporated into Standard 213 (49 CFR § 571.213), that proposed figure did not sufficiently specify dimensions for the hook to ensure that the anchorage will fit it. GM, Ford, Gerry, IMMI and Millennium commented that the proposal did not limit the length on the point of the hook or on the protrusion of the hook above the base. Thus, vehicle manufacturers could not be assured that hooks could be attached to some tether anchorages. The commenters suggested using Australia's specifications for the tether strap hook. NHTSA agrees that the specifications are reasonable and appropriate, and has reflected the dimensions in Figure 11. NHTSA has also harmonized with Transport Canada on this issue.

The NPRM proposed that the tether anchorage would have to be ''easily accessible'' to the user. Ford suggested that an objective specification of the required access is needed, especially if the anchorage were covered, e.g., by a plastic snap-off cover or a trim panel with a perforated section. The commenter said it recommends removing trim covers with a screwdriver or coin, and suggested specifying that ''anchors should be accessible and usable without the need for any tools other than a knife, screwdriver or coin.'' The agency agrees that the suggested language would clarify the ''easily accessible'' requirement and has reflected it in the standard. However, reference to use of a knife has not been incorporated, because a knife might entail more work to access the anchorage than the agency believes is appropriate.

Advocates and Porsche expressed concern about head restraints. Advocates stated that manufacturers may not provide head restraints where a tether is required or consumers may misuse the tether strap routing to go around instead of over the top of the head restraint. Porsche addressed this issue in the front seat where, in some vehicles, the head restraint is integrated with the seat. NHTSA agrees that compatibility problems between the tether and rear seat head rests could occur in some situations. However, the agency does not believe that this is an unsurmountable design problem. ''Y'' shaped tether strap designs that encircle the head restraint might be used. Further, currently all vehicles sold in Canada and Australia effectively accommodate top tether anchorages. Head restraints have been accommodated in those vehicles for years. Finally, by requiring the use of a fixture for testing tether strength, manufacturers will be able to identify and correct for potential compatibility problems between the tether system and head restraints.

GM and Mitsubishi suggested that convertibles should be excluded from the tether anchorage requirement. These commenters noted that practicability concerns have resulted in that type of vehicle being excluded from Canadian requirements for tether anchorages. GM stated that because convertibles have folding roofs, a stowage area behind the seat back for the top and its mechanism, and less rear seat space, there are technical problems involved in installing tether anchorages in these vehicles. NHTSA agrees that many convertibles may have design problems. Since those convertibles with these problems cannot be readily separated from those without those problems using a definition based on physical attributes, the agency has excluded all convertibles from the tether anchorage requirement.

School buses are also excluded because of the conflicting functions of the tether and of the energy-absorbing and compartmentalized school bus seats. The seat backs of school buses are specially made to deform to control crash forces as part of the compartmentalization concept for school bus passenger protection (see 49 CFR 571.222). If the tether anchorage were on the seat, the seat would deform, as designed, before requisite tether anchorage loads could be reached in a test. The agency believes that it would not be feasible to place the tether anchorage on the bus ceiling. Since the appropriate location on the ceiling would be well to the rear of the seating position, that location may be out of range of a typical tether strap. Also, a tether strap anchored to the roof poses a risk of injury to the child seated behind the tethered child restraint. A tether strap anchored to the floor of the bus may interfere with emergency egress of passengers from the seats immediately rearward of the tethered child restraint. For these reasons, NHTSA is excluding school buses from the tether anchorage requirements.

Commenters strongly supported the proposed requirement to increase the stringency of the head excursion test requirements in Standard 213 to the extent that it would have the effect of requiring a top tether on most forward-facing restraints. Concerning the issue of what child restraints are required to be equipped with an upper tether, Graco Children's Products (Graco), the University of Michigan Child Passenger Protection Research Program (UM–UPP) and Hartley Associates (Hartley) asked whether tethers would be mandated for rear-facing restraints and car beds. Graco believed that benefits have not been determined in rear-facing configurations and that having a tether on these restraints may invite misuse.

By addressing the need for a top tether by increasing the stringency of the head excursion performance requirement, the agency has effectively limited the need for an upper tether requirement to forward-facing child restraint systems. Canada does not require a tether for rear-facing child restraints, but Australia does. NHTSA believes that the benefit of an upper tether would accrue primarily to occupants of forward-facing child restraints because the tether is especially effective at reducing head excursion and the potential for head impacts. The primary benefits to occupants of rear-facing child restraints would be to reduce rearward tipping of the restraint, which do not involve high velocity head strikes. With respect to backless booster seats, the agency agrees with commenters that practicability concerns associated with this rule could lead some manufacturers to cease producing these boosters. The agency is therefore excluding backless booster seats from the requirement.

On the definition of a tether strap, Gerry, Evenflo and Century Millennium Development Corporation (Millennium) requested that NHTSA change the definition to be more specific about where the strap attaches to the child restraint. NHTSA agrees to the requested change and has specified in the definition of tether strap that it is a device that is secured to the rigid structure of the ''seat back'' of a child restraint system.

Ford stated that tether straps that are high-mounted are more effective than ones that are low-mounted. Transport Canada tested high- and low-mounted tether straps and found some but not a substantial amount of difference in performance. (A copy of a report of this testing has been placed in the docket.) Accordingly, NHTSA is not specifying where the point of attachment of the tether is to be on the child restraint, but

urges manufacturers to further evaluate the issue in designing the tether.

Commenters addressed the issue of the length of the tether strap, especially in cases of multipurpose passenger vehicles and trucks that may require long straps to reach an anchorage at the bottom of a vehicle seat or at the floor pan. Manufacturers believed that a minimum length is necessary. Specifically, Gerry stated that based on a survey of available tether hardware, a minimum allowance for tether length of 216 mm (8.5 inches) should be required. NHTSA agrees that child restraint manufacturers should provide tethers of sufficient length to enable consumers to attach a child restraint to a tether anchor that is not within close proximity of the top of the back of the child restraint. The agency, however, is concerned that a long tether strap may result in some consumers not willing to take the time to tighten the excess webbing, which is essential for accruing the benefit of the tether. At this time, the agency does not believe that specifying a 216 mm (8.5 inches) minimum strap length is needed. The agency is not aware of problems with tether straps for child restraints sold in Canada. The agency will decide whether to initiate rulemaking in the future on this matter if it becomes a problem.

l. Leadtime and Phasing-in the Requirements

1. Tether Anchorage and Tether Strap

The NPRM proposed that the requirements that vehicles provide user-ready tether anchorages and that child restraints meet the new excursion limit (if necessary by means of a top tether) be made effective at a much earlier date than the requirement for the lower anchorages of a child restraint anchorage system. The agency explained that passenger cars generally are already equipped with a reinforced tether anchor hole (Canada has required a tether anchorage hole in passenger cars since 1989), so it appeared that a user-ready tether anchorage, complete with all the hardware needed for the consumer to attach a tether hook to the vehicle's tether anchorage, can be provided in the near future.

Canada had proposed an effective date of September 1, 1999 for its user-ready tether anchorage requirement for passenger cars. NHTSA proposed that the effective date for its user-ready tether anchorage requirement for passenger cars be the same as that of the Canadian proposal.

For user-ready tether anchorages on LTVs, NHTSA proposed a September 1, 2000 effective date for its requirement that user-ready anchorages be provided. The agency proposed that date based on Canada's then-proposal that its tether anchorage (hole) requirement be effective September 1, 1999, and its tether hardware requirement effective a year later. (MPVs have not been subject to the Canadian requirement that an anchorage hole be provided. That requirement has only applied to passenger cars in Canada.)

Since NHTSA's NPRM, Canada adopted an effective date of September 1, 1999 for its user-ready tether anchorage requirement for passenger cars, and an effective date of September 1, 2000 for a user-ready anchorage requirement for LTVs.

All but one vehicle manufacturer supported the proposed effective date. Most noted that the tether anchorage requirement could be made effective much earlier than the requirement for the lower anchorages. Ford said that it could provide tether anchorages in all of its passenger cars by September 1, 1998. However, in July 1998, Volvo wrote to NHTSA to inform the agency that Volvo is planning to introduce a car (the Volvo S/V 40) into the United States for the 2000 model year (MY). Volvo explained that the car does not have the reinforced tether anchorage hole that all vehicles must have to be sold in Canada. (The manufacturer only plans to sell the car in the U.S., and not sell it in Canada.) The manufacturer said that it cannot install user-ready tether anchorages by September 1, 1999 in these vehicles. Instead, Volvo suggests that the effective date for the user-ready tether anchorage requirement be two years from the date of the final rule, or be phased-in such that after 1 year, 60 percent of a manufacturer's vehicles would be required to be equipped with the user-ready tether anchorage and the rest of the manufacturer's vehicles required to comply with the requirement a year later.

NHTSA has decided to phase-in the user-ready tether anchorage requirement for cars over a two-year period to provide Volvo time to equip its S/V 40 model vehicles with the anchorages. However, the agency does not agree with Volvo's suggestion that only 60 percent of a manufacturer's vehicles should be required to meet the requirement in the first year. Volvo did not provide any information showing that the models will comprise 60 percent of Volvo's vehicles.

In addition, NHTSA believes that the 60 percent figure the manufacturer requested is too low because one of the model types of the S/V 40 is a sedan. NHTSA believes that a user-ready tether anchorage is not difficult to install in a sedan. The reinforced tether anchorage hole can be drilled into structure behind the rear seat, such as that on or around the package shelf. The agency believes that Volvo can expedite installation of the user-ready tether anchorage in at least the sedan versions of the model to meet a September 1, 1999 effective date. Accordingly, this final rule specifies that beginning September 1, 1999, 80 percent of a manufacturer's passenger cars would be required to be equipped with the user-ready tether anchorages and the rest of the vehicles required to comply with the requirement a year later. The tether anchorage requirements for LTVs become effective September 1, 2000.

With regard to child restraints, NHTSA said that some child restraint manufacturers have a Canadian variant of most, if not all, of their forward-facing models, such that child restraints manufactured in the U.S. and sold in Canada already are equipped with a tether to meet Canadian requirements. NHTSA believed that most U.S. manufacturers produce child restraints for sale in Canada. NHTSA proposed an effective date of September 1, 1999 for its proposal to effectively require tethers by increasing the stringency of Standard 213's head excursion requirement. Child restraint manufacturers did not object to the proposed effective date for the more stringent head excursion requirement (which indirectly requires a tether for most child restraint systems). Thus, the proposed effective date of September 1, 1999 is adopted.

2. Lower Anchorage Bars and Means for Attaching Child Restraints to Those Bars

The agency noted in the NPRM that the petitioners for the flexible latchplate system did not explain why they believed that a phase-in is needed for the lower anchorage requirement, or why more than four years would be needed to implement it. The agency said in the NPRM that it wanted to improve compatibility of child restraints and motor vehicles as promptly as possible. To that end, NHTSA requested comments on the feasibility of the manufacturers achieving full implementation (100 percent of affected vehicles) in a shorter period, e.g., two years after the publication of a final rule.

Vehicle manufacturers overwhelmingly commented that a phase-in is needed because the standard would require substantial redesign of vehicle seats and supporting structure. Ford explained that a phase-in is needed because there are no attachment points suitably located in existing vehicles. Ford stated that manufacturers

will typically need to modify the floor pans and the stamping and welding tools used in the production of floor pans, which the commenter stated are changes needing long leadtimes. Ford said that if a final rule were issued that in the summer of 1997, it could meet the phase-in requirements for the first two model years (10 percent in MY 1999, 30 percent in MY 2000) and install child restraint system anchorages in a substantially higher percentage of its vehicles during the third model year (MY 2001) than the 50 percent proposed in the June 1996 petition. Ford expected to install child restraint system anchorages in most vehicles, particularly family vehicles, by September 1, 2000 (i.e., three years after issuance of the final rule) in response to market forces. Ford said that the final year of a four year phase-in is needed to fit anchorages into low volume vehicles. Volkswagen stated that the rigid bar anchorage system is already provided as standard equipment in Europe on all 1998 model Golf vehicles. VW also said that the rigid bars will likely be in practically all other Volkswagen and Audi models by the 1999 model year.

NHTSA is persuaded that because vehicles will require modifications to floor pan stamping and to floor pan welding tools, and because those changes are long leadtime changes, establishing a phase-in will ensure that the child restraint anchorage systems are introduced as soon as possible. A phase-in will also provide manufacturers needed time to redesign and produce vehicles in a cost efficient manner. A four-year leadtime generally corresponds to manufacturing cycles introducing new vehicles or significantly modifying existing models. Yet, because compatibility should improved as soon as possible, the agency believes the four year cycle should be condensed into three years. Comments from Ford and VW indicate that full implementation of the requirement could be achieved within three years. Today's rule adopts a three year phase-in period for the lower vehicle anchorages, which will begin on September 1, 2000. The phase-in schedule for providing the lower anchorage systems is as follows:

Period of manufacture	Percentage of each manufacturer's fleet that needs to have lower anchorage systems for child restraints
From September 1, 2000 to August 31, 2001	20
From September 1, 2001 to August 31, 2002	50
On or after September 1, 2002	100

NHTSA has decided to allow manufacturers of vehicles manufactured in two or more stages to delay compliance until the final year of the phase-in. Because final stage manufacturers and alterers have no control over the year of the phase-in in which a particular vehicle will be certified as complying with the new requirements, NHTSA is allowing these manufacturers until the final year of the phase-in to certify that their vehicles meet the new requirement.

Gerry Baby Products, Cosco and Mark Sedlack of the Millennium Development Corporation urged against a phase-in for the requirement that child restraint system be equipped with means of attaching to the lower anchorage system on vehicles. These commenters stated that child restraint manufacturers do not have as much control over the distribution chain as vehicle manufacturers do. They argued that retail stores will simply refuse to stock the limited numbers of child restraints equipped with the attachments to the lower anchorage systems because those restraints will be higher priced than child restraints that do not have the attachments. The commenters also said that the requirement for the attachments on child restraints should not become effective before the requirement for the lower anchorage system is phased into 100 percent of the vehicle fleet. Otherwise, these commenters warn, consumers will be faced with a new set of attachment hardware and probably no vehicle in which to use the system. This situation was said to be likely to cause widespread confusion and increased potential for misuse.

NHTSA concurs with these commenters that the requirement that child restraint system be equipped with means of attaching to the lower anchorage system should not be phased-in for child restraints. The agency further agrees that the requirement should not become mandatory until 100 percent of affected new vehicles are required to have the lower anchorage system, which will be September 1, 2002. The rationale for waiting until that date is to reduce the possibility of a parent purchasing a new child restraint that has the new attachment hardware, and having nowhere in his or her vehicle to use the improved hardware. Nevertheless, NHTSA believes that market forces probably will encourage child restraint manufacturers to install the attachments before that date.

3. Requirement To Identify Vehicles Certified to the Vehicle Requirements During the Phase-In

Where a safety standard provides manufacturers a phase-in period for a requirement to take effect, the agency needs to know whether a vehicle has been certified as meeting the standard when selecting vehicles to test in NHTSA's compliance program. A phased-in requirement typically includes a reporting requirement for manufacturers to identify to NHTSA which vehicles have been certified to the standard, but the report usually is made at the end of a model year. To enable NHTSA to test vehicles during the production year, manufacturers have to identify the vehicles during the production year that have been certified as complying with the standard. In addition, for reasons similar to those discussed in section VII.j with regard to compliance options, the agency wants to avoid a situation where a manufacturer confronted with an apparent noncompliance with a requirement may respond by arguing that its vehicle was not part of the percentage of its vehicles that was certified as complying with the requirement. This response creates obvious difficulties for the agency in managing its available resources for carrying out its enforcement responsibilities. To enable NHTSA to test vehicles during the production year and to better avoid the possible waste of agency resources, manufacturers have to identify the vehicles during the production year that have been certified as complying with the standard. This final rule includes a requirement that at anytime during the production year, each manufacturer shall, upon request from NHTSA, provide information identifying the vehicles (by make, model and vehicle identification number) that have been certified as complying with the requirements for tether anchorages or child restraint anchorage systems, as the case may be. The manufacturer's identification of a vehicle as a certified vehicle is irrevocable.

VIII. Rulemaking Analyses and Notices

a. Executive Order 12866 (Federal Regulation) and DOT Regulatory Policies and Procedures.

NHTSA has examined the impact of this rulemaking action and determined that it is economically significant within the meaning of Executive Order 12866 and significant within the meaning of the Department of Transportation's regulatory policies and procedures. NHTSA has prepared a final economic assessment (FEA) for this final rule which discusses issues relating to the estimated costs, benefits and other impacts of this rulemaking.

A copy of this analysis has been placed in the docket for this rulemaking action. Interested persons may obtain copies of this document by contacting the docket section at the address or phone number provided at the beginning of this document.

The estimated average total cost of this rule is approximately $152 million annually. The cost of the rule for vehicles is estimated to be about $85 million annually. The costs of the rule related to the vehicle will range, per vehicle, from $2.82 (one rigid bar anchorage system in front seat only) to $6.62 (for a system in front seat and one in back seat or two systems in rear seats, plus a tether anchorage). NHTSA estimates that 15 million vehicles will be affected annually: 9 million passenger cars and light trucks with ''adequate'' rear seats, 3 million vehicles with no rear seat, and 3 million vehicles that can only accommodate forward-facing child restraints in the rear seat (not a rear-facing infant seat).

The estimated annual cost of compliance to child restraint manufacturers is $67 million. This estimate is based on 3.9 million child restraints using webbing to attach the connector to the rigid bars, which adds an average of $17.19 to each child restraint. NHTSA believes that webbing is the material that is most likely to be chosen by child restraint manufacturers to attach the connector. The actual amount spent by child restraint manufacturers, however, will vary depending on the type of connector used, e.g., a hook versus a buckle, and the means used to attach the connector to the child restraint system, e.g., webbing versus a rigid attachment. Some child restraint manufacturers may produce restraints using less expensive equipment, while other manufacturers may chose to use more expensive equipment than is necessary to comply with the rule, resulting in an impact on child restraint systems ranging from $9.62 per restraint to $43.92 per restraint. NHTSA believes that $17.19 is approximately the maximum additional amount that it will cost the child restraint manufacturer to produce a restraint that is both marketable and complies with this rule.

The benefits of the rule are estimated to be 36 to 50 lives saved per year, and 1,231 to 2,929 injuries prevented. Based on the estimated average total annual cost of $152 million, the cost per equivalent life saved for this rule is estimated to be from $2.1 to $3.7 million.

NHTSA has considered the possible cost impacts of this rule on child restraint use rates. As discussed in greater detail in the FEA and in Appendix A to this final rule, the agency believes that the demand for child restraint systems is highly inelastic. This conclusion is supported by the fact that child restraints are considered a necessity since their use is mandated by every State. Also, information indicates that price is not the only criterion affecting sales. The lowest priced child restraints do not have the highest sales volume. Based on clinical trials, consumers have indicated that they are willing to pay a higher price for improved attachment systems. In addition, even if there were an adverse effect on the child restraint market, especially the low end of that market, due to the $9.62 price increase necessitated by this rule, the agency believes that hospitals and loaner programs will be able to provide child restraints for persons who want them but chose not to buy one because of the price increase. Some hospitals and loaner programs believe that they will be able to obtain enough funds to purchase the new child restraints without any major change in the number of restraints they are able to provide to the public.

b. Regulatory Flexibility Act

The Regulatory Flexibility Act of 1980 (Public Law 96–354), as amended, requires agencies to evaluate the potential effects of their proposed and final rules on small businesses, small organizations and small governmental jurisdictions. Section 603 of the Act requires agencies to prepare and make available for public comment a final regulatory flexibility analysis (FRFA) describing the impact of final rules on small entities. NHTSA has included an FRFA in the FEA for this rule.

Section 603(b) of the Act specifies the content of a FRFA. Each FRFA must contain:

- A description of the reasons why action by the agency is being considered.
- A succinct statement of the objectives of, and legal basis for, the final rule.
- A description of and, where feasible, an estimate of the number of small entities to which the final rule will apply.
- A description of the projected reporting, record keeping and other compliance requirements of the final rule including an estimate of the classes of small entities which will be subject to the requirement and the type of professional skills necessary for preparation of the report or record.
- An identification, to the extent practicable, of all relevant Federal rules which may duplicate, overlap or conflict with the final rule.
- Each final regulatory flexibility analysis shall also contain a description of any significant alternatives to the final rule which accomplish the stated objectives of applicable statutes and which minimize any significant economic impact of the final rule on small entities.

The following discussion summarizes the FRFA.

1. Description of the Reasons Why Action by the Agency Is Being Considered

The FRFA explains that NHTSA has undertaken this rulemaking to improve the compatibility of child restraints and vehicle safety belts and increase the correct installation of child restraints. The correct use of child restraints is important because of the number of children killed and injured in vehicle accidents. Annually, about 600 children less than five years of age are killed and over 70,000 are injured as occupants in motor vehicle crashes.

While child restraints are highly effective in reducing the likelihood of death or serious injury in motor vehicle crashes, the degree of their effectiveness depends on how they are installed. This final rule improves child restraint effectiveness by improving compatibility through the establishment of an independent means of securing child restraints.

2. Objectives of, and Legal Basis for, the Final Rule

The final rule is issued under the authority of 49 U.S.C. 322, 30111, 30115, 30117 and 30166; delegation of authority at 49 CFR 1.50.

The objective of this rule is make child restraints easier to install correctly. It requires that motor vehicles and add-on child restraints be equipped with a means independent of vehicle safety belts for securing child restraints to vehicle seats. This rule also reduces

allowable head excursion to effectively require child restraints to be equipped with an upper tether strap. Attached tethers will result in fewer head impacts in a crash.

3. Description and Estimate of the Number of Small Entities to Which the Final Rule Will Apply

NHTSA believes that the final rule could have a significant impact on a substantial number of small entities. The rule would affect motor vehicle manufacturers, almost all of which would not qualify as small businesses, and portable child restraint manufacturers. NHTSA estimates there to be about 10 manufacturers of portable child restraints, four or five of which could be small businesses.

Business entities are generally defined as small businesses by Standard Industrial Classification (SIC) code, for the purposes of receiving Small Business Administration assistance. One of the criteria for determining size, as stated in 13 CFR 121.601, is the number of employees in the firm. There is no separate SIC code for child restraints, or even a category that they fit into well. However, there are categories that could be appropriate. To qualify as a small business in the Motor Vehicle Parts and Accessories category (SIC 3714), the firm must have fewer than 750 employees. The agency has considered the small business impacts of this rule based on this criterion. On the other hand, to qualify as a small business in the category including manufacturers of baby furniture, the firm must have fewer than 500 employees. The NPRM requested comments on which Standard Industrial Classification code would best represent child restraint manufacturers, but no comment was received in response.

The FRFA discusses the possible impacts on small entities. As discussed in the FRFA, the incremental cost increase of $9.62 and the requirement to redesign child restraints could have a significant economic impact on a substantial number of small businesses. NHTSA does not know the specific elasticity of demand for child restraints, but believes that it is highly inelastic. NHTSA believes that an increase in the price of a child restraint of this magnitude will not lead to any significant decrease in demand for the product.

According to information from Cosco (see Appendix A) the average purchase price of a convertible car seat today is $63. About 25 percent of the car seats purchased cost $50 or less; less than five percent cost $100 or more. Cosco estimated that at least 10 percent of the people would not be able to purchase a car seat if prices increased significantly.

The NPRM requested comments on the effect that the price increase resulting from this rule will have on small businesses that manufacture child restraints. No comments were received on this issue.

4. Description of the Projected Reporting, Record Keeping and Other Compliance Requirements for Small Entities

The final rule sets new performance requirements that would enhance the safety of child restraints. Child restraint manufacturers must certify that their products comply with the requirements of the final rule. The certification is made when certifying compliance to Standard 213, in accordance with the provisions set forth in S5.5.2(e) of the standard. NHTSA has decided against a phase-in of the requirements for child restraint manufacturers, so there are no reporting or recordkeeping requirements associated with a phase-in, for those manufacturers. There are no other reporting or record keeping requirements in this final rule for child restraint manufacturers or small businesses.

The final rule will result in new designs for child restraints and an increase in the price of child restraints. An increase in child restraint prices may also affect loaner and giveaway programs. While such a program could have fewer seats available, comments submitted to the NPRM indicate that if the new seats perform as projected, there would be minor effect on the loaner programs.

5. Duplication With Other Federal Rules

There are no relevant Federal rules which may duplicate, overlap or conflict with the final rule.

6. Description of Any Significant Alternatives to the Final Rule

NHTSA believes that there are no alternatives to the rule which would accomplish the stated objectives of 49 U.S.C. 30101 *et seq.* and which would minimize any significant economic impact of the rule on small entities. As discussed above in section III.d., ''Summary of the NPRM, Alternatives considered,'' NHTSA considered a number of other approaches to improve the compatibility between child restraints and vehicle seats. SAE Recommended Practice J1819, ''Securing Child Restraint Systems in Motor Vehicle Rear Seats,'' is not sufficient alone to achieve the desired level of compatibility. It is a tool for evaluating compatibility, not a requirement that vehicle seats and child restraints must be compatible. Further, it is very difficult for a single system to optimize the safety protection for adults of all ranges and child restraints of different types. The current ''lockability'' requirement is not sufficient alone for improving compatibility, because it still depends on the user knowing enough and making the effort to manipulate and correctly route the belt system. Also, the lockability requirement does not address the effects of forward-mounted seat belt anchorages on child restraint effectiveness. Further, because the requirement still depends on the seat belt system to restrain child restraints and the adult population, the lockability approach makes it difficult for designs of the seat belt system to optimize the system for adults, teenagers and older children.

An independent means of attaching child restraints will make properly attaching child restraints easier, and will enable vehicle manufacturers to optimize the design of vehicle belt systems for adult occupants. As for alternative designs of independent child restraint anchorage systems, as discussed in Appendix A, the ''Car Seat Only (CSO)'' system suggested by Cosco would not make attaching a child restraint significantly easier than it is today. The CSO belt would have to be correctly routed through the child restraint, which is a problem occurring with present seats, and appears hard to tighten. Also, Cosco provided no information showing that the CSO belt would improve the securement of a child restraint on contoured (especially humped) seats. Another concern relates to the potential for inadvertent use by an adult occupant. As for the flexible latchplate system as an alternative, as discussed in section VII.d., NHTSA has determined that the rigid bar system has advantages over the flexible latchplate system with regard to international harmonization of safety standards, the design flexibility of the systems, and possible safety benefits of the rigid bar system that warrant its selection over the flexible latchplate system.

c. Executive Order 12612

This rule has been analyzed in accordance with the principles and criteria contained in Executive Order 12612, and the agency has determined that this rule does not have sufficient federalism implications to warrant the preparation of a Federalism Assessment.

d. Unfunded Mandates Reform Act

The Unfunded Mandates Reform Act of 1995 (Public Law 104–4) requires

agencies to prepare a written assessment of the costs, benefits and other effects of proposed or final rules that include a Federal mandate likely to result in the expenditure by State, local or tribal governments, in the aggregate, or by the private sector, of more than $100 million annually. NHTSA has included an evaluation in the FEA for this final rule. The costs and benefits of the rule are discussed above and throughout the FEA.

Participants in a NHTSA public meeting held in March 1995 at the Lifesavers National Conference on Highway Safety Priorities, who typically work in State highway traffic safety agencies, community traffic safety programs and State or local law enforcement agencies, expressed strong support for a requirement for an independent child restraint anchorage system. Support for an independent child restraint anchorage system was also expressed at NHTSA's October 1996 public workshop on various types of anchorage systems.

As discussed above in sections III.d., VII, VIII.b., and in the FEA, the agency does not believe that there are feasible alternatives to the child restraint anchorage system adopted in this final rule. See section VIII.b., above, for a summary of the agency's assessment of the alternatives consisting of SAE Recommended Practice J1819, Standard 208's ''lockability'' requirement, Cosco's CSO system and the flexible latchplate child restraint anchorage system. It should be noted that the rigid bar anchorage system selected by this final rule is the most cost effective of the alternative independent child restraint anchorage systems that the agency evaluated in this regulatory action. This anchorage system results in lower child restraint costs (as low as $9.60 per restraint) than the flexible latchplate system ($11.96 per restraint), and lower vehicle costs ($6.62 for two full anchorages systems plus a third tether anchorage, compared to $8.74 for two full flexible latchplate systems with a third tether anchorage). The vehicle cost of the rigid bar anchorage system is lower than the vehicle costs of the CSO system. (The retractor alone would cost $2.50 to $3.00 per system, or $5 to $6 for two systems. Adding the cost of the belt and anchorage would increase this cost well above the $6.62 for two full rigid anchorages.)

e. National Technology Transfer and Advancement Act

This final rule accords with the spirit of the National Technology Transfer and Advancement Act of 1995 (Public Law 104–113). Under the Act, ''all Federal agencies and departments shall use technical standards that are developed or adopted by voluntary consensus standards bodies, using such technical standards as a means to carry out policy objectives or activities determined by the agencies and departments.'' This final rule uses the technical specifications set forth in a draft international standard being developed by Technical Committee 22 to the International Organization for Standardization (ISO), a worldwide voluntary federation of ISO member bodies. Using the draft ISO standard is consistent with the Act's goals of eliminating the agency's cost of developing its own standards, and encouraging long-term growth for U.S. enterprises and promoting efficiency and economic competition through harmonization of standards.

While NHTSA anticipates that the ISO will be adopting the draft standard as an International Standard within the next year, NHTSA is issuing this final rule at this date, prior to the ISO's completion of work on the draft standard, in order to provide increased safety to this country's children as quickly as possible. Further, the agency anticipates that the ISO and the working group will not make significant changes to the draft ISO standard. To the extent that the final ISO standard differs from this final rule, the agency will evaluate those differences to determine if changes to this final rule appear warranted. In the event NHTSA tentatively determines that changes may be warranted, the agency will commence a rulemaking proceeding and make a decision as to the issuance of an amendment based on all available information developed in the course of that proceeding, in accordance with statutory criteria.

f. National Environmental Policy Act

NHTSA has analyzed this rulemaking action for the purposes of the National Environmental Policy Act. The agency has determined that implementation of this action would not have any significant impact on the quality of the human environment.

g. Executive Order 12778 (Civil Justice Reform)

This rule does not have any retroactive effect. Under section 49 U.S.C. 30103, whenever a Federal motor vehicle safety standard is in effect, a state may not adopt or maintain a safety standard applicable to the same aspect of performance which is not identical to the Federal standard, except to the extent that the state requirement imposes a higher level of performance and applies only to vehicles procured for the State's use. 49 U.S.C. 30161 sets forth a procedure for judicial review of final rules establishing, amending or revoking Federal motor vehicle safety standards. That section does not require submission of a petition for reconsideration or other administrative proceedings before parties may file suit in court.

h. Paperwork Reduction Act

The phase-in production reporting requirements described in this final rule are considered to be information collection requirements as defined by the Office of Management and Budget (OMB) in 5 CFR part 1320. The collection of information would require manufacturers of passenger cars and trucks and multipurpose passenger vehicles with a GVWR or 3,855 kg (8,500 lb) or less and buses with a GVWR of 4,536 kg (10,000 lb) or less to annually submit a report, and maintain records related to the report, concerning the number of such vehicles that meet the user-ready tether anchorage and child restraint anchorage system requirements of Standard 225 during the phase-in of those requirements. The phase-in of the tether anchorage requirement will be completed in one year, beginning September 1, 1999, and the phase-in of the rigid bar lower anchorage requirements will be completed in three years, beginning September 1, 2000. The purpose of the reporting requirements is to aid the agency in determining whether a manufacturer of passenger cars and trucks and multipurpose passenger vehicles with a GVWR or 3,855 kg (8,500 lb) or less, or buses with a GVWR of 4,536 kg (10,000 lb) or less, has complied with the tether anchorage and child restraint anchorage system requirements during the phase-in of those requirements.

The first required report will pertain to the tether anchorage phase-in requirements. Under today's final rule, the report will be due within 60 days after the end of the production year ending August 31, 2000.

NHTSA will be submitting the information collection request to OMB for review and clearance under the Paperwork Reduction Act of 1995 (Public Law 104–13, 44 U.S.C. Chapter 35) in the near future. The clearance for the information collection requirements of Standard 213, ''Child Restraint Systems,'' will expire in the year 2000 (OMB Clearance No. 2127–0511). NHTSA anticipates submitting a request to OMB to renew the clearance of that standard and at or near same time, will be submitting an information collection

request to OMB for review and clearance of the phase-in reporting requirements adopted today for Standard 225.

List of Subjects

49 CFR Part 571

Imports, Incorporation by reference, Motor vehicle safety, Reporting and recordkeeping requirements, Tires.

49 CFR Part 596

Infants and children, Motor vehicle safety, Reporting and recordkeeping requirements.

In consideration of the foregoing, NHTSA amends 49 CFR Chapter V as set forth below.

PART 571—FEDERAL MOTOR VEHICLE SAFETY STANDARDS

1. The authority citation for Part 571 is revised to read as follows:

Authority: 49 U.S.C. 322, 30111, 30115, 30166 and 30177; delegation of authority at 49 CFR 1.50.

2. Section 571.208 is amended by revising the introductory text of S7.1.1.5 and adding S7.1.1.5(d), to read as follows:

§ 571.208 Standard No. 208; Occupant crash protection.

* * * * *

S7.1.1.5 Passenger cars, and trucks, buses, and multipurpose passenger vehicles with a GVWR of 10,000 pounds or less manufactured on or after September 1, 1995 shall meet the requirements of S7.1.1.5(a), S7.1.1.5(b) and S7.1.1.5(c), subject to S7.1.1.5(d).

* * * * *

(d) For passenger cars, and trucks and multipurpose passenger vehicles with a GVWR of 8,500 pounds or less, and buses with a GVWR of 10,000 lb or less manufactured on or after September 1, 2012, each designated seating position that is equipped with a child restraint anchorage system meeting the requirements of § 571.225 need not meet the requirements of this S7.1.1.5.

* * * * *

3. Section 571.213 is amended by:

a. Adding to S4, in alphabetical order, definitions for ''Child restraint anchorage system,'' ''Tether anchorage,'' ''Tether strap,'' and ''Tether hook''';

b. Revising S5.1.3;

c. Revising S5.1.3.1, S5.3.1, S5.3.2, and S5.6.1;

d. Adding S5.9;

e. Revising S6.1.1(a)(1), S6.1.1(c), and S6.1.2(a)(1);

f. Adding S6.1.2(d)(1)(iii); and

g. Revising Figure 1A and Figure 1B, and adding, in numerical order, Figure 1A', Figure 1B' and Figure 11.

The revised and added paragraphs read as follows:

§ 571.213 Standard No. 213; Child restraint systems.

* * * * *

S4. *Definitions.*

* * * * *

Child restraint anchorage system is defined in S3 of FMVSS No. 225 (§ 571.225).

* * * * *

Tether anchorage is defined in S3 of FMVSS No. 225 (§ 571.225).

Tether strap is defined in S3 of FMVSS No. 225 (§ 571.225).

Tether hook is defined in S3 of FMVSS No. 225 (§ 571.225).

* * * * *

S5.1.3 *Occupant excursion.* When tested in accordance with S6.1 and the requirements specified in this section, each child restraint system shall meet the applicable excursion limit requirements specified in S5.1.3.1–S5.1.3.3.

S5.1.3.1 *Child restraint systems other than rear-facing ones and car beds.* Each child restraint system, other than a rear-facing child restraint system or a car bed, shall retain the test dummy's torso within the system.

(a) For each add-on child restraint system:

(1) No portion of the test dummy's head shall pass through a vertical transverse plane that is 720 mm or 813 mm (as specified in the table in this S5.1.3.1) forward of point Z on the standard seat assembly, measured along the center SORL (as illustrated in figure 1B of this standard); and

(2) Neither knee pivot point shall pass through a vertical transverse plane that is 915 mm forward of point Z on the standard seat assembly, measured along the center SORL.

TABLE TO S5.1.3.1(A).—ADD-ON FORWARD-FACING CHILD RESTRAINTS

When this type of child restraintis	Is tested in accordance with—	These excursion limits apply	Explanatory note: In the test specified in 2nd column, the child restraint is attached to the test seat assembly in the manner described below, subject to certain conditions
Harnesses, backless booster seats with tethers, and restraints designed for use by physically handicapped children.	S6.1.2(a)(1)(A)(i)	Head 813 mm; Knee 915 mm	Attached with lap belt; in addition, if a tether is provided, it is attached.
Belt-positioning seats	S6.1.2(a)(1)(B)	Head 813 mm; Knee 915 mm	Attached with lap and shoulder belt; no tether is attached.
All other child restraints, manufactured before September 1, 1999.	S6.1.2(a)(1)(A)(ii)	Head 813 mm; Knee 915 mm	Attached with lap belt; no tether is attached.
All other child restraints, manufactured on or after September 1, 1999.	S6.1.2(a)(1)(A)(ii)	Head 813 mm; Knee 915 mm	Attached with lap belt; no tether is attached.
	S6.1.2(a)(1)(A)(iv) (beginning September 1, 2002).		Attached to lower anchorages of child restraint anchorage system; no tether is attached.
	S6.1.2(a)(1)(A)(i)	Head 720 mm; Knee 915 mm	Attached with lap belt; in addition, if a tether is provided, it is attached.
	S6.1.2(a)(1)(A)(iii) (beginning September 1, 2002).		Attached to lower anchorages of child restraint anchorage system; in addition, if a tether is provided, it is attached.

(b) In the case of a built-in child restraint system, neither knee pivot point shall, at any time during the dynamic test, pass through a vertical transverse plane that is 305 mm forward of the initial pre-test position of the respective knee pivot point, measured along a horizontal line that passes through the knee pivot point and is parallel to the vertical longitudinal plane that passes through the vehicle's longitudinal centerline.

* * * * *

S5.3 Installation.

S5.3.1 Except for components designed to attach to a child restraint anchorage system, each add-on child restraint system shall not have any means designed for attaching the system to a vehicle seat cushion or vehicle seat back and any component (except belts) that is designed to be inserted between the vehicle seat cushion and vehicle seat back.

S5.3.2 Each add-on child restraint system shall be capable of meeting the requirements of this standard when installed on the vehicle seating assembly solely by each of the means indicated in the following table for the particular type of child restraint system:

Type of add-on child restraint system	Means of installation			
	Type 1 seat belt assembly	Type 1 seat belt assembly plus a tether anchorage, if needed	Child restraint anchorage system (effective September 1, 2002)	Type II seat belt assembly
Harnesses		X		
Car beds	X			
Rear-facing restraints	X		X	
Belt-positioning seats				X
All other child restraints	X	X	X	

* * * * *

S5.6.1 *Add-on child restraint systems.* Each add-on child restraint system shall be accompanied by printed installation instructions in English that provide a step-by-step procedure, including diagrams, for installing the system in motor vehicles, securing the system in the vehicles, positioning a child in the system, and adjusting the system to fit the child. For each child restraint system that has components for attaching to a tether anchorage or a child restraint anchorage system, the installation instructions shall include a step-by-step procedure, including diagrams, for properly attaching to that anchorage or system.

* * * * *

S5.9 *Attachment to child restraint anchorage system.*

(a) Each add-on child restraint system manufactured on or after September 1, 2002, other than a car bed, harness and belt-positioning seat, shall have components permanently attached to the system that enable the restraint to be securely fastened to the lower anchorages of the child restraint anchorage system specified in Standard No. 225 (§ 571.225) and depicted in Drawing Package 100–1000 with Addendum A: Seat Base Weldment (consisting of drawings and a bill of materials) dated October 23, 1998, (incorporated by reference; see § 571.5).

(b) In the case of each child restraint system that is manufactured on or after September 1, 1999 and that has components for attaching the system to a tether anchorage, those components shall include a tether hook that conforms to the configuration and geometry specified in Figure 11 of this standard.

(c) In the case of each child restraint system that is manufactured on or after September 1, 1999 and that has components, including belt webbing, for attaching the system to a tether anchorage or to a child restraint anchorage system, the belt webbing shall be adjustable so that the child restraint can be tightly attached to the vehicle.

(d) Each child restraint system, other than a system with hooks for attaching to the lower anchorages of the child restraint anchorage system, shall provide either a clear audible indication when each attachment to the lower anchorages becomes fully latched or attached, or a clear visual indication that all attachments to the lower anchorages are fully latched or attached. Visual indications shall be detectable under normal daylight lighting conditions.

* * * * *

S6.1.1 *Test conditions.*

(a) Test devices.

(1) The test device for add-on restraint systems is a standard seat assembly consisting of a simulated vehicle bench seat, with three seating positions, which is described in Drawing Package SAS–100–1000 with Addendum A: Seat Base Weldment (consisting of drawings and a bill of materials) dated October 23, 1998, (incorporated by reference; see § 571.5). The assembly is mounted on a dynamic test platform so that the center SORL of the seat is parallel to the direction of the test platform travel and so that movement between the base of the assembly and the platform is prevented.

* * * * *

(c) As illustrated in Figures 1A and 1B of this standard, attached to the seat belt anchorage points provided on the standard seat assembly are Type 1 seat belt assemblies in the case of add-on child restraint systems other than belt-positioning seats, or Type 2 seat belt assemblies in the case of belt-positioning seats. These seat belt assemblies meet the requirements of Standard No. 209 (§ 571.209) and have webbing with a width of not more than 2 inches, and are attached to the anchorage points without the use of retractors or reels of any kind. As illustrated in Figures 1A'' and 1B'' of this standard, attached to the standard seat assembly is a child restraint anchorage system conforming to the specifications of Standard No. 225 (§ 571.225), in the case of add-on child restraint systems other than belt-positioning booster seats.

* * * * *

S6.1.2 *Dynamic test procedure.*

(a) * * *

(1) *Test configuration I.*

(i) *Child restraints other than belt-positioning seats.* Attach the child restraint in any of the following manners specified in S6.1.2(a)(1)(i)(A) through (D), unless otherwise specified in this standard.

(A) Install the child restraint system at the center seating position of the

standard seat assembly, in accordance with the manufacturer's instructions provided with the system pursuant to S5.6.1, except that the standard lap belt is used and, if provided, a tether strap may be used.

(B) Except for a child harness, a backless child restraint system with a tether strap, and a restraint designed for use by physically handicapped children, install the child restraint system at the center seating position of the standard seat assembly as in S6.1.2(a)(1)(i)(A), except that no tether strap (or any other supplemental device) is used.

(C) Install the child restraint system using the child restraint anchorage system at the center seating position of the standard seat assembly in accordance with the manufacturer's instructions provided with the system pursuant to S5.6.1. The tether strap, if one is provided, is attached to the tether anchorage.

(D) Install the child restraint system using only the lower anchorages of the child restraint anchorage system as in S6.1.2(a)(1)(i)(C). No tether strap (or any other supplemental device) is used.

(ii) *Belt-positioning seats.* A belt-positioning seat is attached to either outboard seating position of the standard seat assembly in accordance with the manufacturer's instructions provided with the system pursuant to S5.6.1 using only the standard vehicle lap and shoulder belt and no tether (or any other supplemental device).

(iii) In the case of each built-in child restraint system, activate the restraint in the specific vehicle shell or the specific vehicle, in accordance with the manufacturer's instructions provided in accordance with S5.6.2.

* * * * * *

(d) * * *

(1) * * *

(iii) When attaching a child restraint system to the tether anchorage and the child restraint anchorage system on the standard seat assembly, tighten all belt systems used to attach the restraint to the standard seat assembly to a tension of not less than 53.5 N and not more than 67 N, as measured by a load cell or other suitable means used on the webbing portion of the belt.

* * * * *

BILLING CODE 4910–59–P

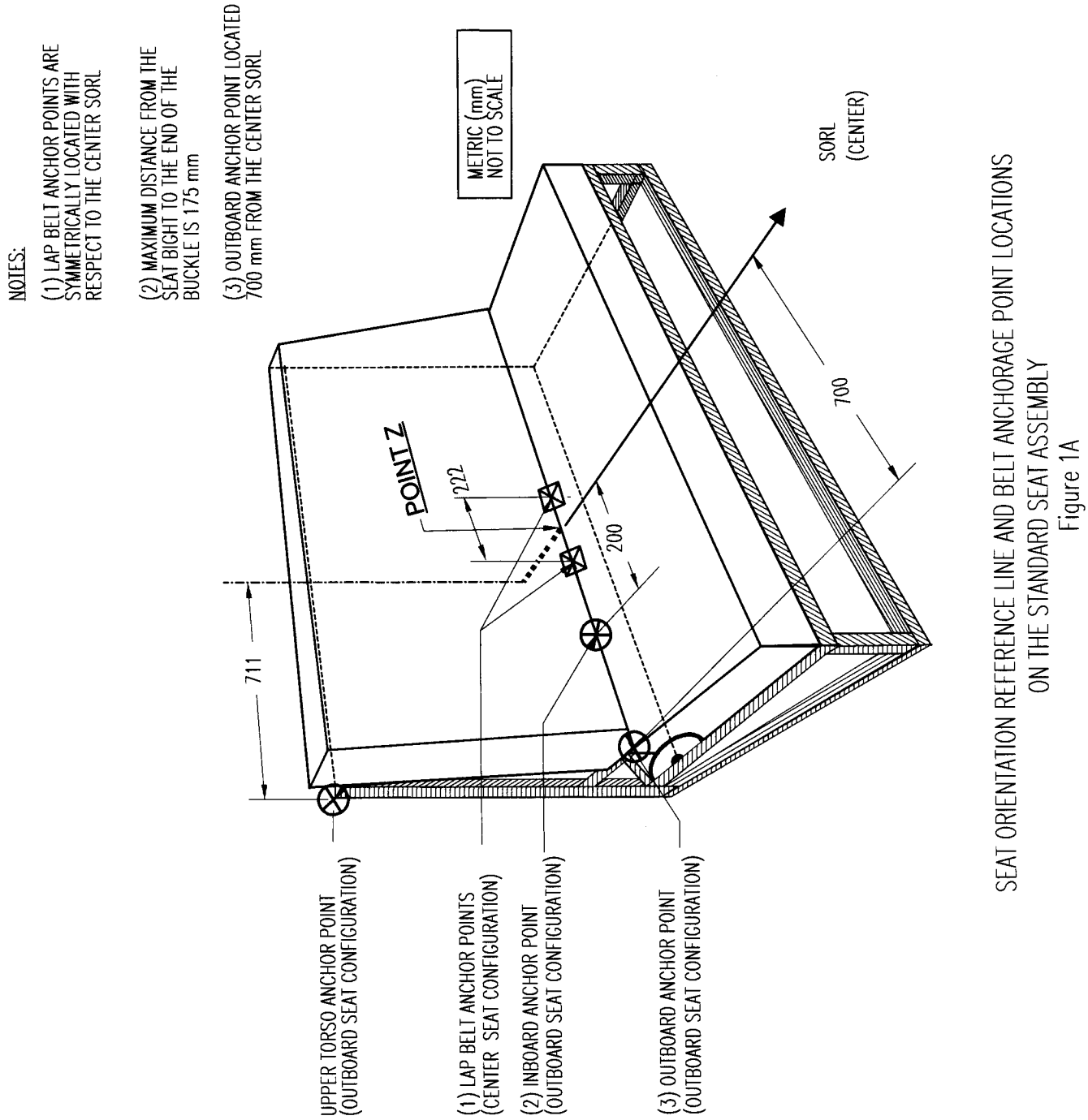

SEAT ORIENTATION REFERENCE LINE AND BELT ANCHORAGE POINT LOCATIONS ON THE STANDARD SEAT ASSEMBLY

Figure 1A

NOTES:

(1i) UNIVERSAL LOWER ANCHOR BARS 6 mm DIAMETER AND 25 mm LENGTH

(1ii) TRANSVERSE HORIZONTAL DISTANCE BETWEEN THE CENTER OF THE UNIVERSAL ANCHOR BARS AND THE VERTICAL PLANE LOWER CONTAINING SORL AT THE CENTER OF THE SEAT ASSEMBLY IS 140 mm.

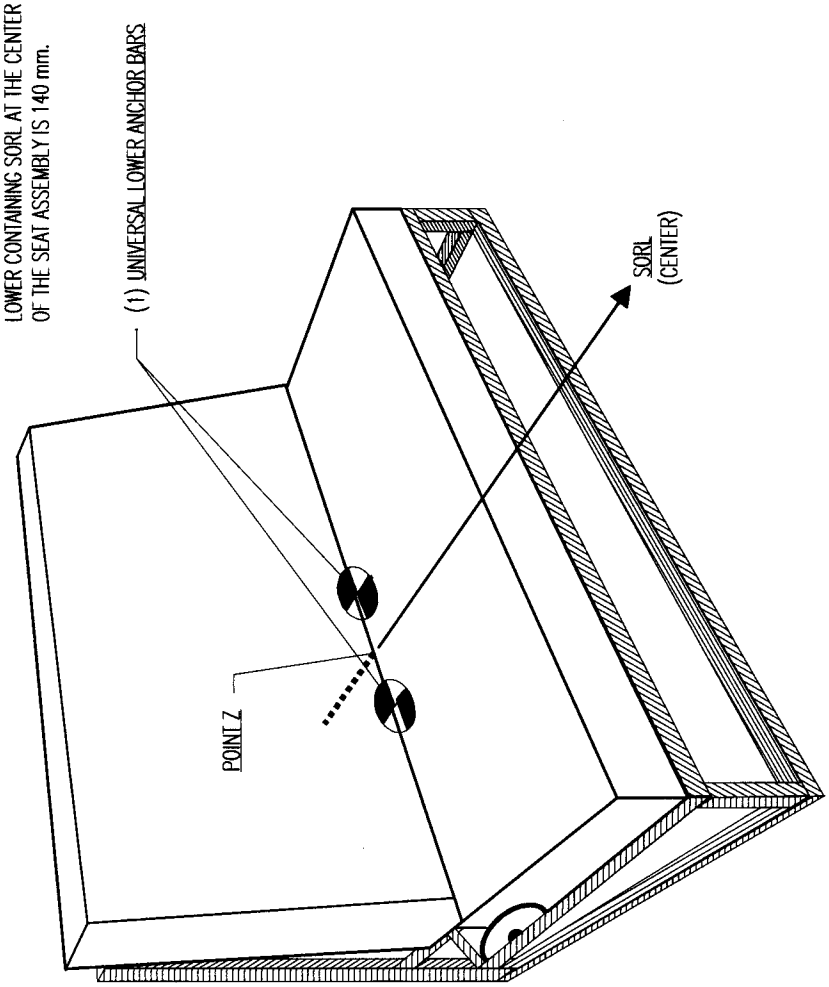

SEAT ORIENTATION REFERENCE LINE AND LOCATION OF UNIVERSAL CHILD RESTRAINT ANCHORAGE SYSTEM ON THE STANDARD SEAT ASSEMBLY

Figure 1A'

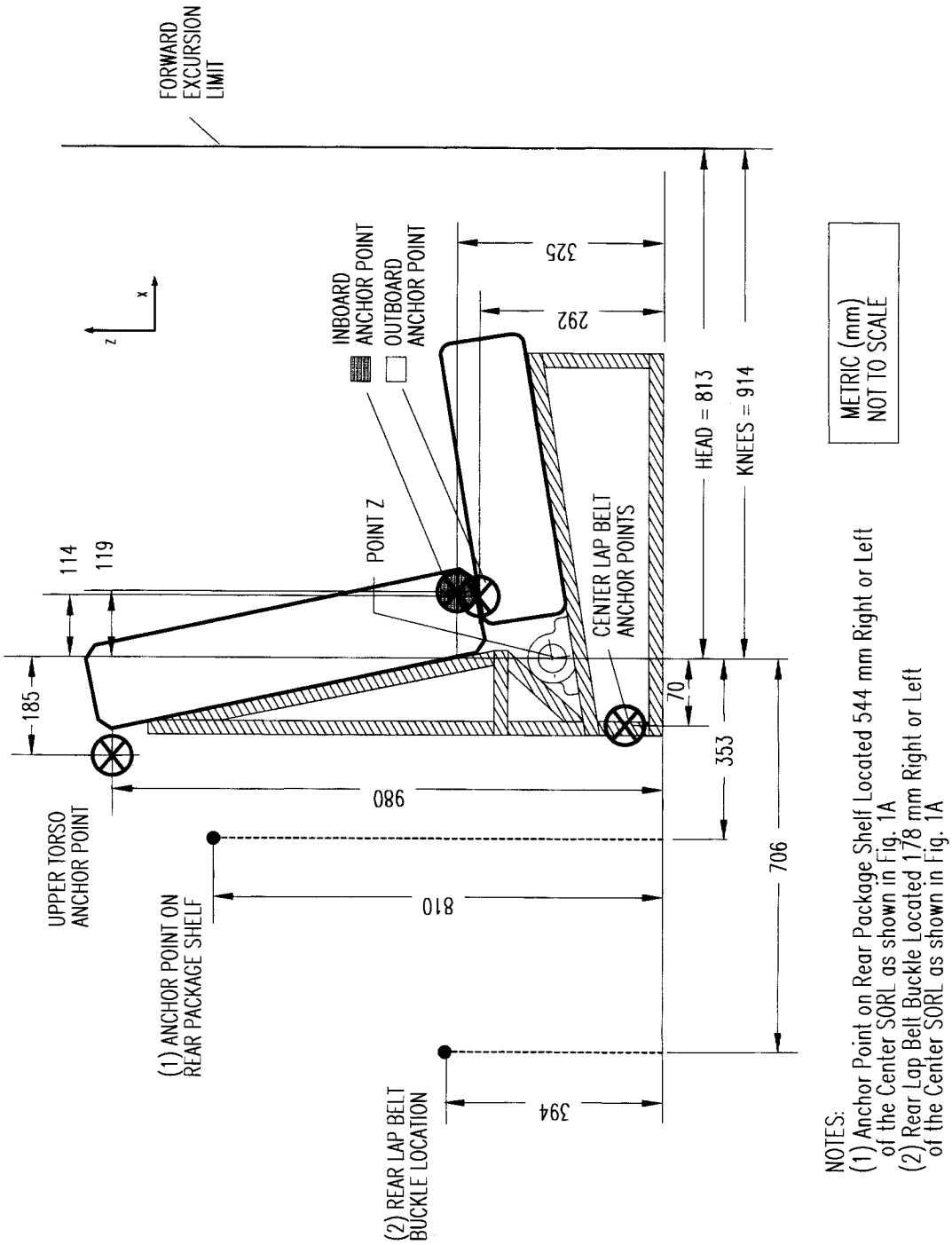

NOTES:
(1) Anchor Point on Rear Package Shelf Located 544 mm Right or Left of the Center SORL as shown in Fig. 1A
(2) Rear Lap Belt Buckle Located 178 mm Right or Left of the Center SORL as shown in Fig. 1A

LOCATION OF BELT ANCHORAGE POINTS AND FORWARD EXCURSION LIMITS ON THE STANDARD SEAT ASSEMBLY
Figure 1B

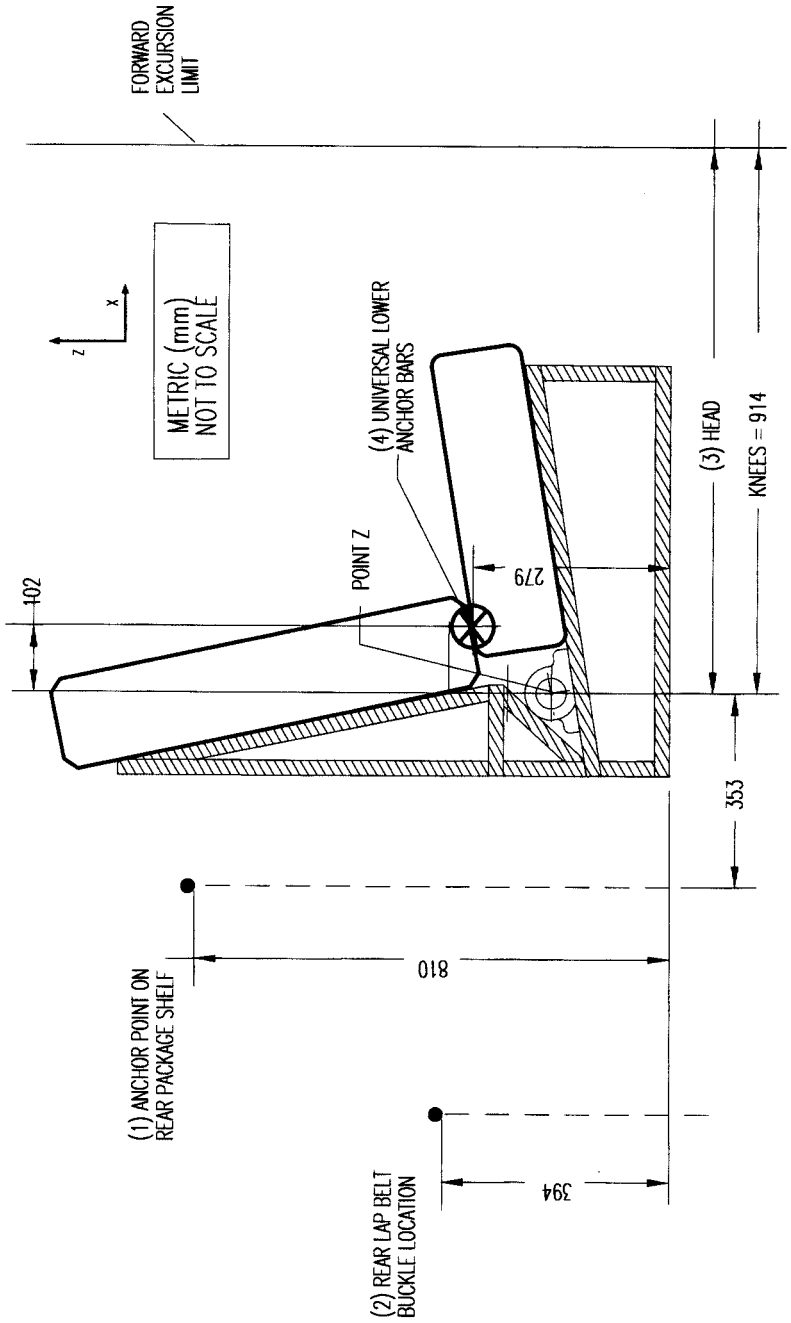

NOTES:
(1) Anchor Point on Rear Package Shelf Located 544 mm Right or Left of the Center SORL as shown in Fig. 1A'
(2) Rear Lap Belt Buckle Located 178 mm Right or Left of the Center SORL as shown in Fig. 1A'
(3) Head Excursion Limit is: (i) 720 mm with Tether Attached and (ii) 813 mm with Tether Unattached
(4) Universal Lower Anchor Bars Located 102 mm Forward of Pt Z and 279 mm Upward from Floor

LOCATION OF UNIVERSAL CHILD RESTRAINT ANCHORAGE SYSTEM AND FORWARD EXCURSION LIMITS FOR THE STANDARD SEAT ASSEMBLY

Figure 1B'

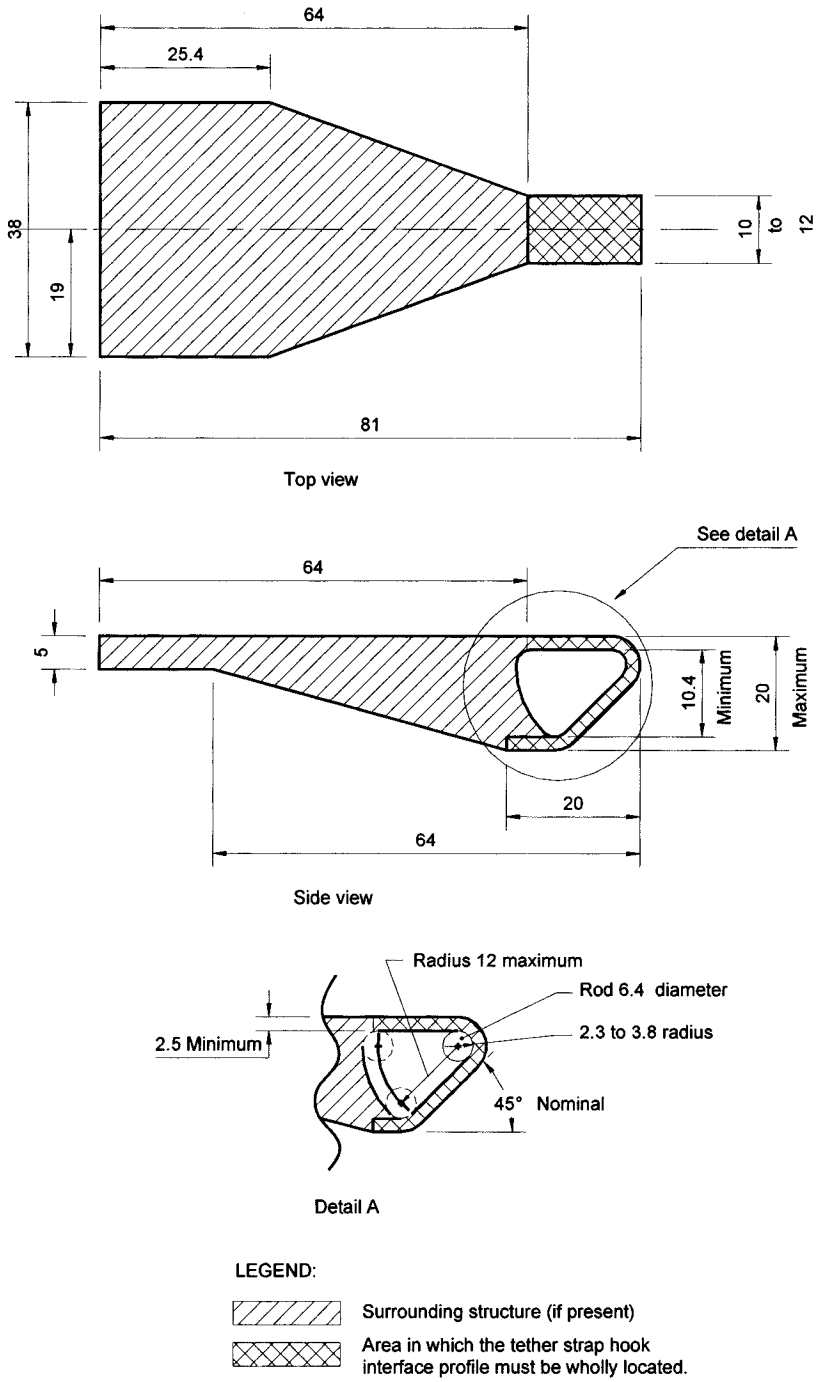

Notes

1. Dimensions in mm, except where otherwise indicated
2. Drawing not to scale

Figure 11 -- Interface Profile of Tether Hook

BILLING CODE 4910–59–C

4. Section 571.225 is added to read as follows:

§ 571.225 Standard No. 225; Child restraint anchorage systems.

S1. *Purpose and scope.* This standard establishes requirements for child restraint anchorage systems to ensure their proper location and strength for the effective securing of child restraints, to reduce the likelihood of the anchorage systems' failure, and to increase the likelihood that child restraints are properly secured and thus more fully achieve their potential effectiveness in motor vehicles.

S2. *Application.* This standard applies to passenger cars; to trucks and multipurpose passenger vehicles with a gross vehicle weight rating (GVWR) of 3,855 kilograms (8,500 pounds) or less, except walk-in van-type vehicles and vehicles manufactured to be sold exclusively to the U.S. Postal Service; and to buses (including school buses) with a GVWR of 4,536 kg (10,000 lb) or less.

S3. *Definitions.*

Child restraint anchorage means any vehicle component, other than Type I or Type II seat belts, that is involved in transferring loads generated by a child restraint system to the vehicle structure.

Child restraint anchorage system means a vehicle system that is designed for attaching a child restraint system to a vehicle at a particular designated seating position, consisting of:

(a) Two lower anchorages meeting the requirements of S9; and

(b) A tether anchorage meeting the requirements of S6.

Child restraint fixture (CRF) means the fixture depicted in Figures 1 and 2 of this standard that simulates the dimensions of a child restraint system, and that is used to determine the space required by the child restraint system and the location and accessibility of the lower anchorages.

Rear designated seating position means any designated seating position (as that term is defined at § 571.3) that is rearward of the front seats(s).

SFAD 1 means Static Force Application Device 1 shown in Figures 12 to 16 of this standard.

SFAD 2 means Static Force Application Device 2 shown in Figures 17 and 18 of this standard.

Tether anchorage means a user-ready, permanently installed vehicle system that transfers loads from a tether strap through the tether hook to the vehicle structure and that accepts a tether hook.

Tether strap means a strap that is secured to the rigid structure of the seat back of a child restraint system, and is connected to a tether hook that transfers the load from that system to the tether anchorage.

Tether hook means a device, illustrated in Figure 11 of Standard No. 213 (§ 571.213), used to attach a tether strap to a tether anchorage.

S4. *General vehicle requirements.*

S4.1 Each tether anchorage and each child restraint anchorage system installed, either voluntarily or pursuant to this standard, in any new vehicle manufactured on or after September 1, 1999, shall comply with the configuration, location and strength requirements of this standard. The vehicle shall have written information, in English, on using those child restraint anchorages.

S4.2 For passenger cars manufactured on or after September 1, 1999 and before September 1, 2000, not less than 80 percent of the manufacturer's average annual production of vehicles (not including convertibles), as set forth in S13, shall be equipped with a tether anchorage as specified in paragraphs (a), (b) and (c) of S4.2, except as provided in S5.

(a) Each vehicle with three or more rear designated seating positions shall be equipped with a tether anchorage conforming to the requirements of S6 at no fewer than three rear designated seating positions. The tether anchorage of a child restraint anchorage system may count towards the three required tether anchorages. In each vehicle with a designated seating position other than an outboard designated seating position, at least one tether anchorage (with or without the lower anchorages of a child restraint anchorage system) shall be at such a designated seating position. In a vehicle with three or more rows of seating positions, at least one of the tether anchorages (with or without the lower anchorages of a child restraint anchorage system) shall be installed at a seating position in the second row.

(b) Each vehicle with not more than two rear designated seating positions shall be equipped with a tether anchorage at each rear designated seating position. The tether anchorage of a child restraint anchorage system may count toward the required tether anchorages.

(c) Each vehicle without any rear designated seating position shall be equipped with a tether anchorage at each front passenger seating position.

S4.3 Each vehicle manufactured on or after September 1, 2000 and before September 1, 2002, shall be equipped as specified in paragraphs (a) and (b) of S4.3, except as provided in S5.

(a) A specified percentage of each manufacturer's yearly production, as set forth in S14, shall be equipped as follows:

(1) Each vehicle with three or more rear designated seating positions shall be equipped with a child restraint anchorage system at not fewer than two rear designated seating positions. In a vehicle with three or more rows of seating positions, at least one of the child restraint anchorage systems shall be at a seating position in the second row.

(2) Each vehicle with not more than two rear designated seating positions shall be equipped with a child restraint anchorage system at each rear designated seating position.

(b) Each vehicle, including a vehicle that is counted toward the percentage of a manufacturer's yearly production required to be equipped with child restraint anchorage systems, shall be equipped as described in S4.3(b)(1), (2) or (3).

(1) Each vehicle with three or more rear designated seating positions shall be equipped with a tether anchorage conforming to the requirements of S6 at no fewer than three rear designated seating positions. The tether anchorage of a child restraint anchorage system may count towards the three required tether anchorages. In each vehicle with a designated seating position other than an outboard designated seating position, at least one tether anchorage (with or without the lower anchorages of a child restraint anchorage system) shall be at such a designated seating position. In a vehicle with three or more rows of seating positions, at least one of the tether anchorages (with or without the lower anchorages of a child restraint anchorage system) shall be installed at a seating position in the second row.

(2) Each vehicle with not more than two rear designated seating positions shall be equipped with a tether anchorage at each rear designated seating position. The tether anchorage of a child restraint anchorage system may count toward the required tether anchorages.

(3) Each vehicle without any rear designated seating position shall be equipped with a tether anchorage at each front passenger seating position.

S4.4 Vehicles manufactured on or after September 1, 2002 shall be equipped as specified in paragraphs (a) through (c) of S4.4, except as provided in S5.

(a) Each vehicle with three or more rear designated seating positions shall be equipped as specified in S4.4(a)(1) and (2).

(1) Each vehicle shall be equipped with a child restraint anchorage system at not fewer than two rear designated

seating positions. At least one of the child restraint anchorage systems shall be installed at a seating position in the second row in each vehicle that has three or more rows.

(2) Each vehicle shall be equipped with a tether anchorage conforming to the requirements of S6 at a third rear designated seating position. The tether anchorage of a child restraint anchorage system may count towards the third required tether anchorage. In each vehicle with a rear designated seating position other than an outboard designated seating position, at least one tether anchorage (with or without the lower anchorages of a child restraint anchorage system) shall be at such a designated seating position.

(b) Each vehicle with not more than two rear designated seating positions shall be equipped with a child restraint anchorage system at each rear designated seating position.

(c) Each vehicle without any rear designated seating position shall be equipped with a tether anchorage at each front passenger seating position.

S5. *General exceptions.*

(a) Convertibles and school buses are excluded from the requirements to be equipped with tether anchorages.

(b) A vehicle may be equipped with a built-in child restraint system conforming to the requirements of Standard No. 213 (49 CFR 571.213) instead of one of the required tether anchorages or child restraint anchorage systems.

(c)(1) Each vehicle that—

(i) Does not have a rear designated seating position and that thus meets the conditions in S4.5.4.1(a) of Standard No. 208 (§ 571.208); and

(ii) Has an air bag on-off switch meeting the requirements of S4.5.4 of Standard No. 208, shall have a child restraint anchorage system for a designated passenger seating position in the front seat, instead of a tether anchorage that is required for a front passenger seating position.

(2) Each vehicle that—

(i) Has a rear designated seating position and meets the conditions in S4.5.4.1(a) of Standard No. 208 (§ 571.208); and

(ii) Has an air bag on-off switch meeting the requirements of S4.5.4 of Standard 208, shall have a child restraint anchorage system for a designated passenger seating position in the front seat, instead of a child restraint anchorage system that is required for the rear seat.

(d) A vehicle that does not have an air bag on-off switch meeting the requirements of S4.5.4 of Standard No. 208 (§ 571.208), shall not have any child restraint anchorage system installed at a front designated seating position.

S6. *Requirements for tether anchorages.*

S6.1 *Configuration of the tether anchorage.* Each tether anchorage shall:

(a) Permit the attachment of a tether hook of a child restraint system meeting the configuration and geometry specified in Figure 11 of Standard No. 213 (§ 571.213);

(b) Be accessible without the need for any tools other than a screwdriver or coin;

(c) Once accessed, be ready for use without the need for any tools; and

(d) Be sealed to prevent the entry of exhaust fumes into the passenger compartment.

S6.2 *Location of the tether anchorage.*

Subject to S6.2(a) and (b), the part of each tether anchorage that attaches to a tether hook shall be located within the shaded zone shown in Figures 3 to 7 of this standard of the designated seating position for which it is installed, such that—

(a) The H-point of a three-dimensional H-point machine, that is described in SAE Standard J826 (June 1992), (incorporation by reference; see § 571.5), and whose position relative to the shaded zone is specified in Figures 3 to 7 of this standard, is located—

(1) At the actual H-point of the seat, as defined in section 2.2.11.3 of SAE Recommended Practice J1100 (June 1993), (incorporation by reference; see § 571.5), at the full rearward and downward position of the seat; or

(2) In the case of a designated seating position that has a child restraint anchorage system, midway between vertical longitudinal planes passing through the lateral center of the bar in each of the two lower anchorages of that system; and

(b) The back pan of the H-point machine is at the same angle from the vertical as the vehicle seat back with the seat adjusted to its full rearward and full downward position and the seat back in its most upright position.

S6.2.1.1 In the case of passenger cars and multipurpose passenger vehicles manufactured before September 1, 2004, the part of each user-ready tether anchorage that attaches to a tether hook may, at the manufacturer's option (with said option selected prior to, or at the time of, certification of the vehicle), instead of complying with S6.2.1, be located within the shaded zone shown in Figures 8 to 11 of this standard of the designated seating position for which it is installed, relative to the shoulder reference point of the three dimensional H-point machine described in section 3.1 of SAE Standard J826 (June 1992), (incorporation by reference; see § 571.5), such that—

(a) The H-point of the three dimensional H-point machine is located—

(1) At the actual H-point of the seat, as defined in section 2.2.11.3 of SAE Recommended Practice J1100 (June 1993), (incorporation by reference; see § 571.5), at the full rearward and downward position of the seat; or

(2) In the case of a designated seating position that has a child restraint anchorage system, midway between vertical longitudinal planes passing through the lateral center of the bar in each of the two lower anchorages of that system; and

(b) The back pan of the H-point machine is at the same angle to the vertical as the vehicle seat back with the seat adjusted to its full rearward and full downward position and the seat back in its most upright position.

S6.2.1.2 In the case of a vehicle that—

(a) Has a user-ready tether anchorage for which no part of the shaded zone shown in Figures 3 to 7 of this standard of the designated seating position for which the anchorage is installed is accessible without removing a seating component of the vehicle; and

(b) Has a tether strap routing device that is—

(1) Not less than 65 mm behind the torso line for that seating position, in the case of a flexible routing device or a deployable routing device, measured horizontally and in a vertical longitudinal plane; or

(2) Not less than 100 mm behind the torso line for that seating position, in the case of a fixed rigid routing device, measured horizontally and in a vertical longitudinal plane, the part of that anchorage that attaches to a tether hook may, at the manufacturer's option (with said option selected prior to, or at the time of, certification of the vehicle) be located outside that zone.

S6.3 *Strength requirements for tether anchorages.*

S6.3.1 Subject to S6.3.2, when tested in accordance with S8—

(a) Any point on the tether anchorage must not be displaced more than 125 mm; and

(b) There shall be no complete separation of any anchorage component.

S6.3.2 In vehicles manufactured before September 1, 2004, each user-ready tether anchorage in a row of designated seating positions in a passenger car may, at the manufacturer's option (with said option selected prior to, or at the time of, certification of the vehicle), instead of complying with

S6.3.1, withstand the application of a force of 5,300 N, when tested in accordance with S8.2, such that the anchorage does not release the belt strap specified in S8.2 or allow any point on the tether anchorage to be displaced more than 125 mm.

S6.3.3 In the case of a row of designated seating positions that has more than one tether anchorage, the force referred to in S6.3.1 and S6.3.2 may, at the agency's option, be applied simultaneously to each tether anchorage. However, a particular tether anchorage need not meet further requirements after the lower anchorages of the child restraint anchorage system of the designated seating position at which the tether anchorage is installed have met S9.4.

S7. *Test conditions for testing tether anchorages.*

The test conditions described in paragraphs (a) and (b) of S7 apply to the test procedures in S8.

(a) Vehicle seats are adjusted to their full rearward and full downward position and the seat back is placed in its most upright position.

(b) Head restraints are adjusted in accordance with the manufacturer's instructions, provided pursuant to S12, as to how the head restraints should be adjusted when using the child restraint anchorage system. If instructions with regard to head restraint adjustment are not provided pursuant to S12, the head restraints are adjusted to any position.

S8. *Test procedures.* Each vehicle shall meet the requirements of S6.3 when tested according to the following procedures. Where a range of values is specified, the vehicle shall be able to meet the requirements at all points within the range. For the testing specified in these procedures, the SFAD used in the test has a tether strap consisting of webbing material conforming to the breaking strength and elongation limits (for Type I seat belt assemblies) set forth in S4.2(b) and S4.2(c), respectively, of Standard No. 209 (§ 571.209). The strap is fitted at one end with hardware for applying the force and at the other end with a bracket for attachment to the tether anchorage.

S8.1 Apply the force specified in S6.3, as follows—

(a) Use the following specified test device, as appropriate:

(1) SFAD 1, to test a tether anchorage at a designated seating position that does not have a child restraint anchorage system; or

(2) SFAD 2, to test a tether anchorage at a designated seating position that has a child restraint anchorage system.

(b) Attach the test device to the vehicle belts or to the lower anchorages of the child restraint anchorage system, as appropriate, and attach the test device to the tether anchorage, in accordance with the manufacturer's instructions provided pursuant to S12. All belt systems (including the tether) used to attach the test device are tightened to a tension of not less than 53.5 N and not more than 67 N, as measured by a load cell used on the webbing portion of the belt.

(c) Apply the force—

(1) Initially, in a forward direction parallel to a vertical longitudinal plane and through the Point X on the test device; and

(2) Initially, along a horizontal line or along any line below or above that line that is at an angle to that line of not more than 5 degrees. Apply a preload force of 500 N to measure the angle; and then

(3) Increase the preload pull force to a full force application of 15,000 N within 30 seconds, at an onset rate of not more than 135,000 N/s; and maintain at a 15,000 N level for a minimum of 1 second.

S8.2 Apply the force specified in S6.3 as follows:

(a) Attach a belt strap, and tether hook, to the user-ready tether anchorage. The belt strap extends not less than 250 mm forward from the vertical transverse plane touching the rear top edge of the vehicle seat back, and passes over the top of the vehicle seat back as shown in Figure 19 of this standard;

(b) Apply the force at the end of the belt strap—

(1) Initially, in a forward direction in a vertical longitudinal plane that is parallel to the vehicle's longitudinal centerline;

(2) Initially, along a horizontal line or along any line below or above that line that is at an angle to that line of not more than 20 degrees;

(3) So that the force is attained within 30 seconds, at any onset rate of not more than 135,000 N/s; and

(4) Maintained at a 5,300 N level for a minimum of 1 second.

S9. *Requirements for the lower anchorages of the child restraint anchorage system.*

S9.1 *Configuration of the lower anchorages*

S9.1.1 The lower anchorages shall consist of two bars that—

(a) Are 6 mm ±1 mm in diameter;

(b) Are straight, horizontal and transverse, and whose centroidal longitudinal axes are collinear;

(c) Are not less than 25 mm, but not more than 40 mm in length;

(d) Can be connected to, over their entire length, as specified in paragraph S9.1.1(c), by the connectors of a child restraint system;

(e) Are 280 mm ±1 mm apart, measured from the center of the length of one bar to the center of the length of the other bar;

(f) Are an integral and permanent part of the vehicle; and

(g) Are rigidly attached to the vehicle such that they will not deform more than 5 mm when subjected to a 100 N force in any direction.

S9.2 *Location of the lower anchorages.*

S9.2.1 With adjustable seats adjusted as described in S9.2.2, each lower anchorage bar shall be located so that a vertical transverse plane tangent to the front surface of the bar is:

(a) Not more than 70 mm behind the corresponding point Z of the CRF, measured parallel to the bottom surface of the CRF and in a vertical longitudinal plane, while the CRF is pressed against the seat back by the rearward application of a horizontal force of 5 N at point A on the CRF; and

(b) Not less than 120 mm behind the vehicle seating reference point, measured horizontally and in a vertical longitudinal plane.

S9.2.2 Adjustable seats are adjusted as follows:

(a) Place adjustable seat backs in the manufacturer's nominal design riding position in the manner specified by the manufacturer; and

(b) Place adjustable seats in the full rearward and full downward position.

S9.3 *Adequate fit of the lower anchorages.* Each vehicle and each child restraint anchorage system in that vehicle shall be designed such that the CRF can be placed inside the vehicle and attached to the lower anchorages of each child restraint anchorage system, with adjustable seats adjusted as described in S9.3(a) and (b).

(a) Place adjustable seat backs in the manufacturer's nominal design riding position in the manner specified by the manufacturer; and

(b) Place adjustable seats in the full rearward and full downward position.

S9.4 *Strength of the lower anchorages.*

S9.4.1 When tested in accordance with S11, the lower anchorages shall not allow point X on SFAD 2 to be displaced more than 125 mm when—

(a) A force of 11,000 N is applied in a forward direction in a vertical longitudinal plane that is parallel to the vehicle's longitudinal centerline; and

(b) A force of 5,000 N is applied in a lateral direction in a vertical longitudinal plane that is 75±5 degrees to either side of a vertical longitudinal plane that is parallel to the vehicle's longitudinal centerline.

S9.4.2 In the case of vehicle seat assemblies equipped with more than one child restraint anchorage system, at the agency's option, each child restraint anchorage system may be tested simultaneously or sequentially. Sequential testing may, at the agency's option, include testing one system to the requirement of S9.4.1(a) and another system to S9.4.1(b). However, the lower anchorages of a particular child restraint anchorage system need not meet further requirements after having met S9.4.1(a) or either lateral pull requirement in S9.4.1(b), tested to any of these requirements at the agency's option.

S9.5 *Marking and conspicuity of the lower anchorages.* Each vehicle shall comply with S9.5(a) or (b).

(a) Above each bar installed pursuant to S4, the vehicle shall be permanently marked with a circle:

(1) That is not less than 13 mm in diameter;

(2) Whose color contrasts with its background; and

(3) That is located on each seat back such that its center is not less than 50 mm and not more than 75 mm above the bar, and in the vertical longitudinal plane that passes through the center of the bar.

(b) The vehicle shall be configured such that each of the bars installed pursuant to S4 is visible, without the compression of the seat cushion or seat back, when the bar is viewed, in a vertical longitudinal plane passing through the center of the bar, along a line making an upward 30 degree angle with a horizontal plane.

S10. *Test conditions for testing the lower anchorages.* The test conditions described in this paragraph apply to the test procedures in S11.

(a) Vehicle seats are adjusted to their full rearward and full downward position and the seat back in its most upright position.

(b) Head restraints are adjusted in accordance with the manufacturer's instructions, provided pursuant to S12, as to how the head restraints should be adjusted when using the child restraint anchorage system. If instructions with regard to head restraint adjustment are not provided pursuant to S12, the head restraints are adjusted to any position.

S11. *Test procedure.* Each vehicle shall meet the requirements of S9.4 when tested according to the following procedures. Where a range of values is specified, the vehicle shall be able to meet the requirements at all points within the range.

(a) *Forward force direction.* Place SFAD 2 in the vehicle seating position and attach it to the two lower anchorages of the child restraint anchorage system. Do not attach the tether anchorage. Apply a preload force of 500 N at point X of the test device. Increase the preload pull force to a full force application of 11,000 N within 30 seconds, with an onset rate not exceeding 135,000 N per second, and maintain the 11,000 N level for 10 seconds.

(b) *Lateral force direction.* Place SFAD 2 in the vehicle seating position and attach it to the two lower anchorages of the child restraint anchorage system. Do not attach the tether anchorage. Apply a preload force of 500 N at point X of the test device. Increase the preload pull force to a full force application of 5,000 N within 30 seconds, with an onset rate not exceeding 135,000 N per second, and maintain the 5,000 N level for 10 seconds.

S12. *Written instructions.* The vehicle must provide written instructions, in English, for using the tether anchorages and the child restraint anchorage system in the vehicle. If the vehicle has an owner's manual, the instructions must be in that manual. The instructions shall:

(a) Indicate which seating positions in the vehicle are equipped with tether anchorages and child restraint anchorage systems;

(b) In the case of vehicles required to be marked as specified in paragraph S9.5(a), explain the meaning of markings provided to locate the lower anchorages of child restraint anchorage systems; and

(c) Include instructions that provide a step-by-step procedure, including diagrams, for properly attaching a child restraint system to the tether anchorages and the child restraint anchorage systems.

S13. *Tether anchorage phase-in requirements for passenger cars manufactured on or after September 1, 1999 and before September 1, 2000.*

S13.1 Passenger cars manufactured on or after September 1, 1999 and before September 1, 2000 shall comply with S13.1.1 through S13.2. At anytime during the production year ending August 31, 2000, each manufacturer shall, upon request from the Office of Vehicle Safety Compliance, provide information identifying the passenger cars (by make, model and vehicle identification number) that have been certified as complying with the tether anchorage requirements of this standard. The manufacturer's designation of a passenger car as a certified vehicle is irrevocable.

S13.1.1 Subject to S13.2, for passenger cars manufactured on or after September 1, 1999 and before September 1, 2000, the number of vehicles complying with S4.2 shall be not less than 80 percent of:

(a) The manufacturer's average annual production of passenger cars manufactured on or after September 1, 1996 and before September 1, 1999; or

(b) The manufacturer's production of passenger cars manufactured on or after September 1, 1999 and before September 1, 2000.

S13.1.2 For the purpose of calculating average annual production of vehicles for each manufacturer and the number of vehicles manufactured by each manufacturer under S13.1.1, a vehicle produced by more than one manufacturer shall be attributed to a single manufacturer as provided in S13.1.2(a) through (c), subject to S13.2.

(a) A vehicle which is imported shall be attributed to the importer.

(b) A vehicle manufactured in the United States by more than one manufacturer, one of which also markets the vehicle, shall be attributed to the manufacturer which markets the vehicle.

(c) A vehicle produced by more than one manufacturer shall be attributed to any one of the vehicle's manufacturers specified by an express written contract, reported to the National Highway Traffic Safety Administration under 49 CFR part 596, between the manufacturer so specified and the manufacturer to which the vehicle would otherwise be attributed under S13.1.2(a) or (b).

S13.2 For the purposes of calculating average annual production of passenger cars for each manufacturer and the number of passenger cars manufactured by each manufacturer under S13.1, each passenger car that is excluded from the requirement to provide tether anchorages is not counted.

S14. *Lower anchorages phase-in requirements for vehicles manufactured on or after September 1, 2000 and before September 1, 2002.*

S14.1 Vehicles manufactured on or after September 1, 2000 and before September 1, 2002 shall comply with S14.1.1 through S14.1.2. At anytime during the production years ending August 31, 2001, and August 31, 2002, each manufacturer shall, upon request from the Office of Vehicle Safety Compliance, provide information identifying the vehicles (by make, model and vehicle identification number) that have been certified as complying with the child restraint anchorage requirements of this standard. The manufacturer's designation of a vehicle as a certified vehicle is irrevocable.

S14.1.1 *Vehicles manufactured on or after September 1, 2000 and before*

September 1, 2001. Subject to S14.4, for vehicles manufactured on or after September 1, 2000 and before September 1, 2001, the number of vehicles complying with S4.3 shall be not less than 20 percent of:

(a) The manufacturer's average annual production of vehicles manufactured on or after September 1, 1997 and before September 1, 2000; or

(b) The manufacturer's production on or after September 1, 2000 and before September 1, 2001.

S14.1.2 *Vehicles manufactured on or after September 1, 2001 and before September 1, 2002.* Subject to S14.4, for vehicles manufactured on or after September 1, 2001 and before September 1, 2002, the number of vehicles complying with S4.3 shall be not less than 50 percent of:

(a) The manufacturer's average annual production of vehicles manufactured on or after September 1, 1998 and before September 1, 2001; or

(b) The manufacturer's production on or after September 1, 2001 and before September 1, 2002.

S14.2 *Vehicles produced by more than one manufacturer.*

S14.2.1 For the purpose of calculating average annual production of vehicles for each manufacturer and the number of vehicles manufactured by each manufacturer under S14.1.1 through S14.1.2, a vehicle produced by more than one manufacturer shall be attributed to a single manufacturer as follows, subject to S14.2.2.

(a) A vehicle which is imported shall be attributed to the importer.

(b) A vehicle manufactured in the United States by more than one manufacturer, one of which also markets the vehicle, shall be attributed to the manufacturer which markets the vehicle.

S14.2.2 A vehicle produced by more than one manufacturer shall be attributed to any one of the vehicle's manufacturers specified by an express written contract, reported to the National Highway Traffic Safety Administration under 49 CFR part 596, between the manufacturer so specified and the manufacturer to which the vehicle would otherwise be attributed under S14.2.1.

S14.3 *Alternative phase-in schedule for final-stage manufacturers and alterers.* A final-stage manufacturer or alterer may, at its option, comply with the requirements set forth in S14.3 (a) and (b) instead of complying with the requirements set forth in S14.1.1 through S14.1.2.

(a) Vehicles manufactured on or after September 1, 2000 and before September 1, 2002 are not required to comply with the requirements specified in this standard.

(b) Vehicles manufactured on or after September 1, 2002 shall comply with the requirements specified in this standard.

S14.4 For the purposes of calculating average annual production of vehicles for each manufacturer and the number of vehicles manufactured by each manufacturer under S14.1.1 and S14.1.2, each vehicle that is excluded from the requirement to provide child restraint anchorage systems is not counted.

BILLING CODE 4910–59–P

Figures to § 571.225

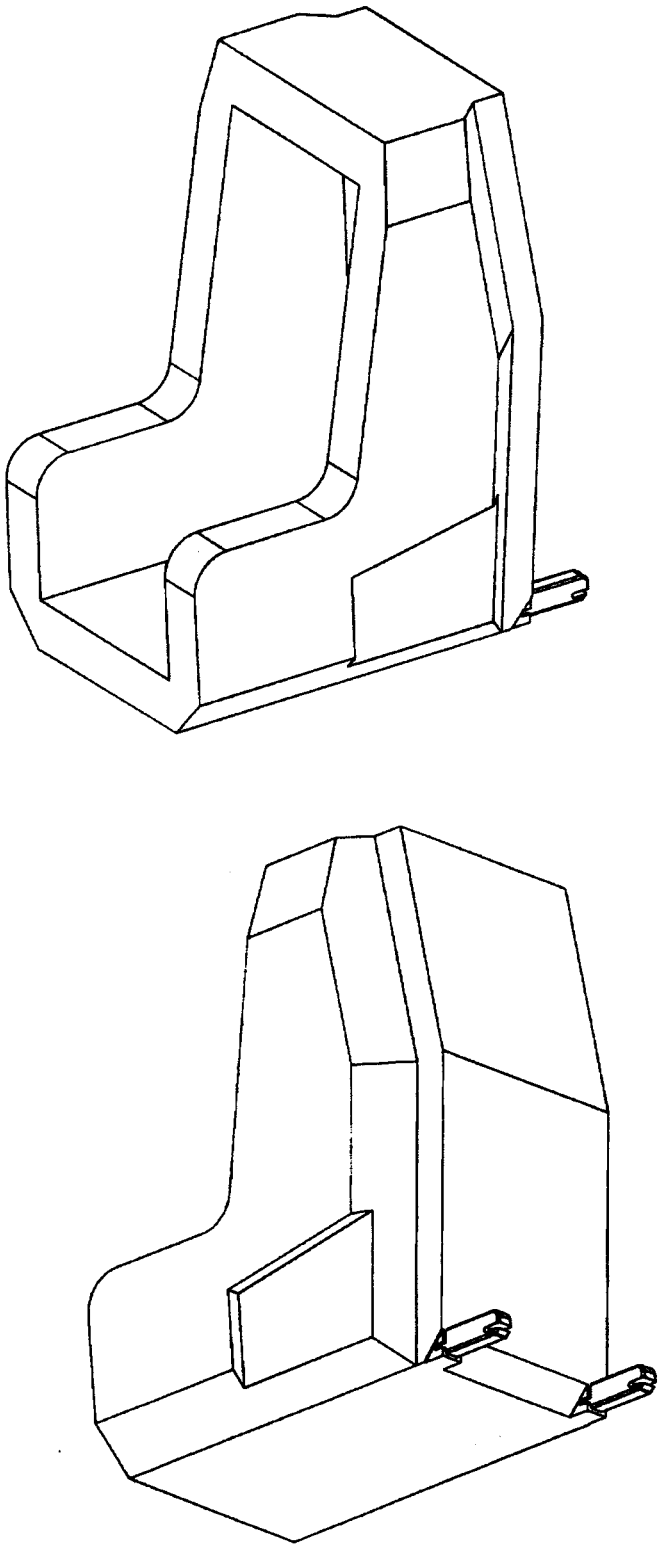

Figure 1 – Child restraint fixture (CRF)

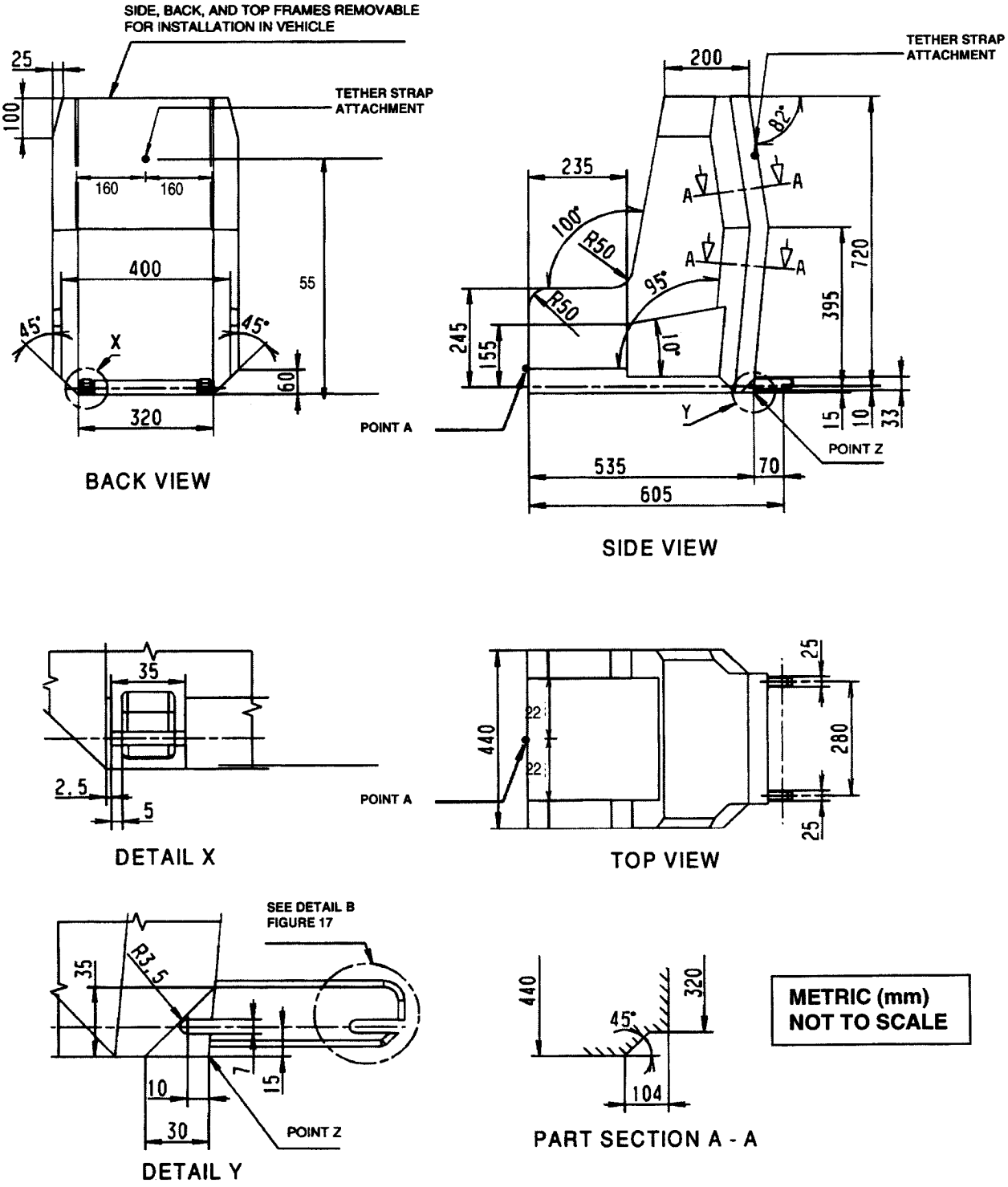

Figure 2 — Child restraint fixture (CRF)

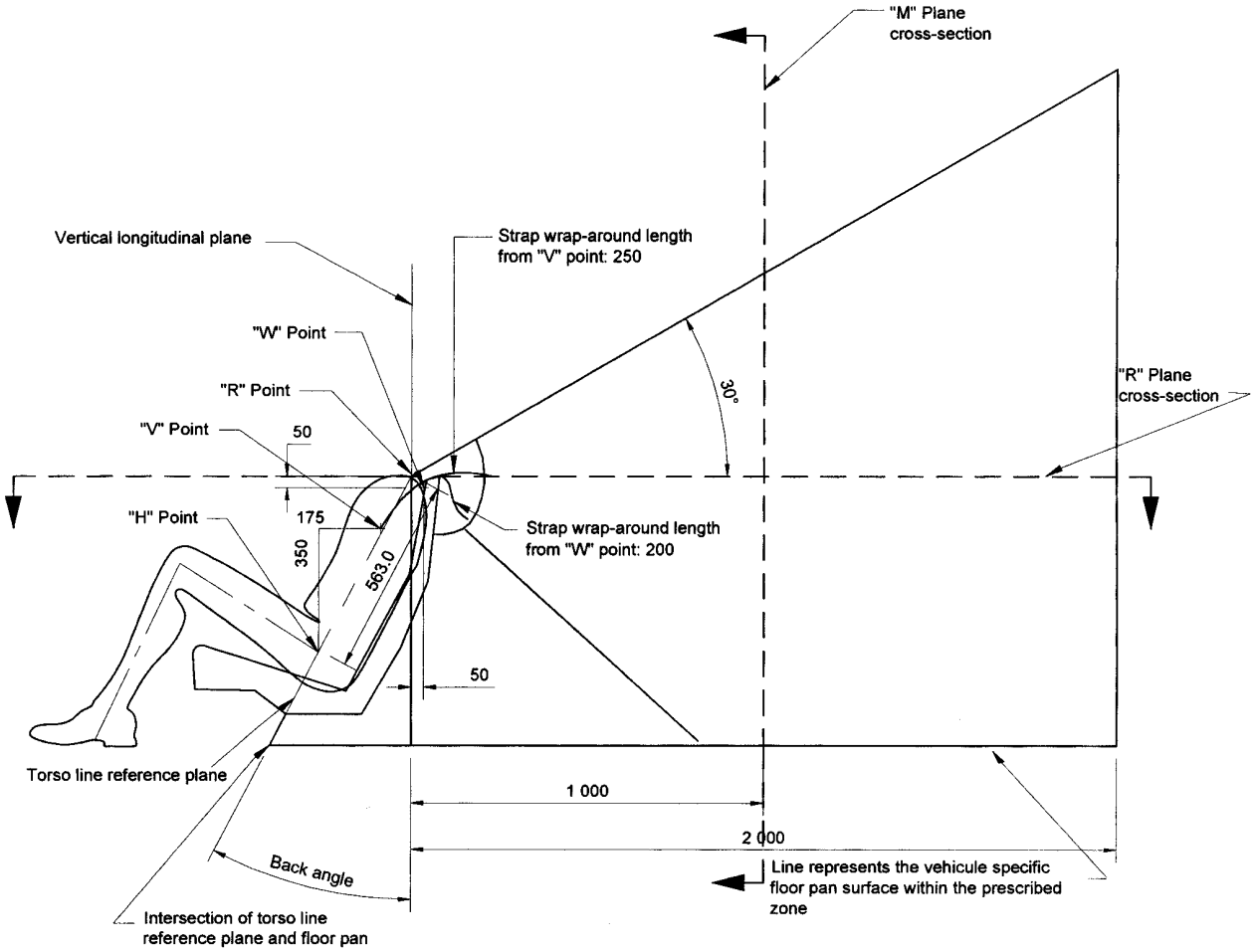

Notes

1. Dimensions in mm, except where otherwise indicated
2. Portion of user-ready tether anchorage that is designed to bind with the tether strap hook to be located within shaded zone
3. Drawing not to scale
4. "R" Point: Shoulder reference point
5. "V" Point: V-reference point, 350 mm vertically above and 175 mm horizontally back from H-point
6. "W" Point: W-reference point, 50 mm vertically below and 50 mm horizontally back from "R" Point
7. "M" Plane: M-reference plane, 1 000 mm horizontally back from "R" Point

Figure 3 -- Side View, User-ready Tether Anchorage Location

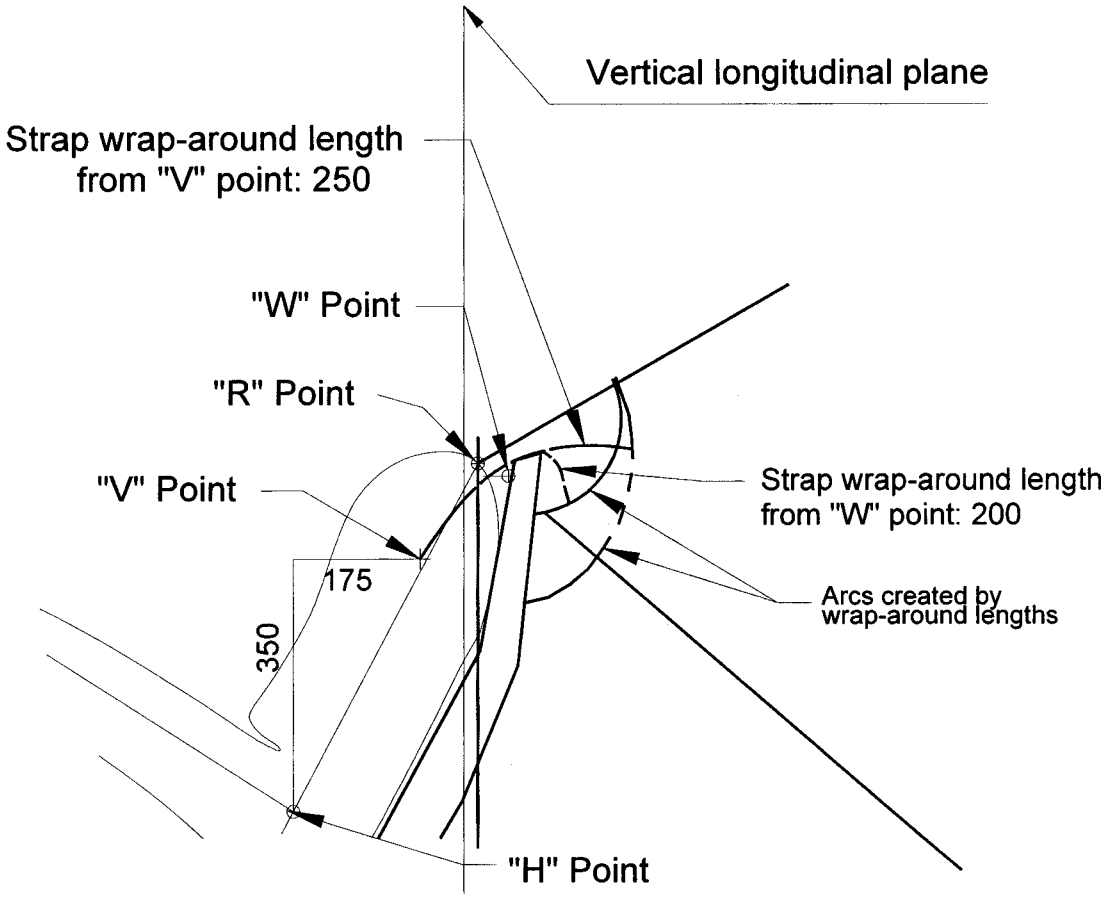

Notes

1. Dimensions in mm, except where otherwise indicated
2. Portion of user-ready tether anchorage that is designed to bind with the tether strap hook to be located within shaded zone
3. Drawing not to scale
4. "R" Point: Shoulder reference point
5. "V" Point: V-reference point, 350 mm vertically above and 175 mm horizontally back from H-point
6. "W" Point: W-reference point, 50 mm vertically below and 50 mm horizontally back from "R" Point
7. "M" Plane: M-reference plane, 1 000 mm horizontally back from "R" Point

Figure 4 -- Enlarged Side View of StrapWrap-around Area, User-ready Tether Anchorage Location

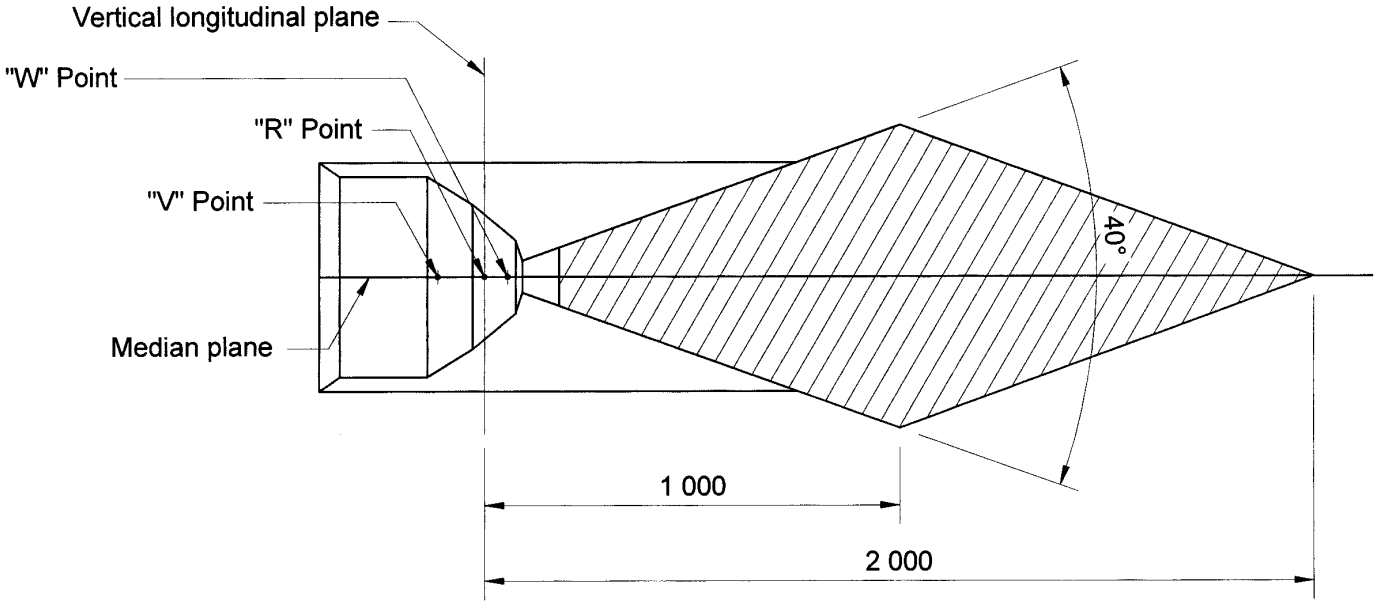

Notes

1. Dimensions in mm, except where otherwise indicated
2. Portion of user-ready tether anchorage that is designed to bind with the tether strap hook to be located within shaded zone
3. Drawing not to scale
4. "R" Point: Shoulder reference point
5. "V" Point: V-reference point, 350 mm vertically above and 175 mm horizontally back from H-point
6. "W" Point: W-reference point, 50 mm vertically below and 50 mm horizontally back from "R" Point

Figure 5 -- Plan View (R-plane Cross Section), User-ready Tether Anchorage Location

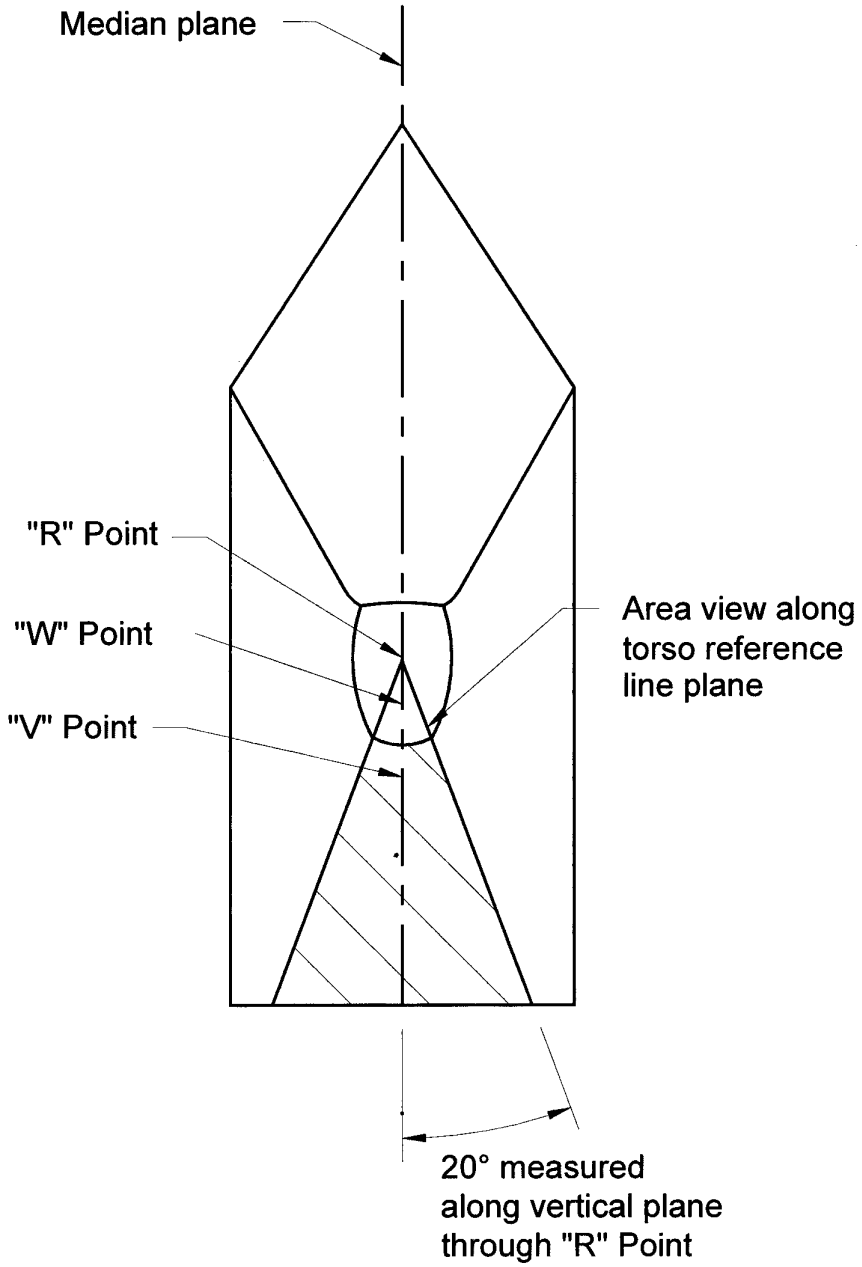

Notes

1. Portion of user-ready tether anchorage that is designed to bind with the tether strap hook to be located within shaded zone
2. Drawing not to scale
3. "R" Point: Shoulder reference point
4. "V" Point: V-reference point, 350 mm vertically above and 175 mm horizontally back from H-point
5. "W" Point: W-reference point, 50 mm vertically below and 50 mm horizontally back from "R" Point

Figure 6 -- Front View, User-ready Tether Anchorage Location

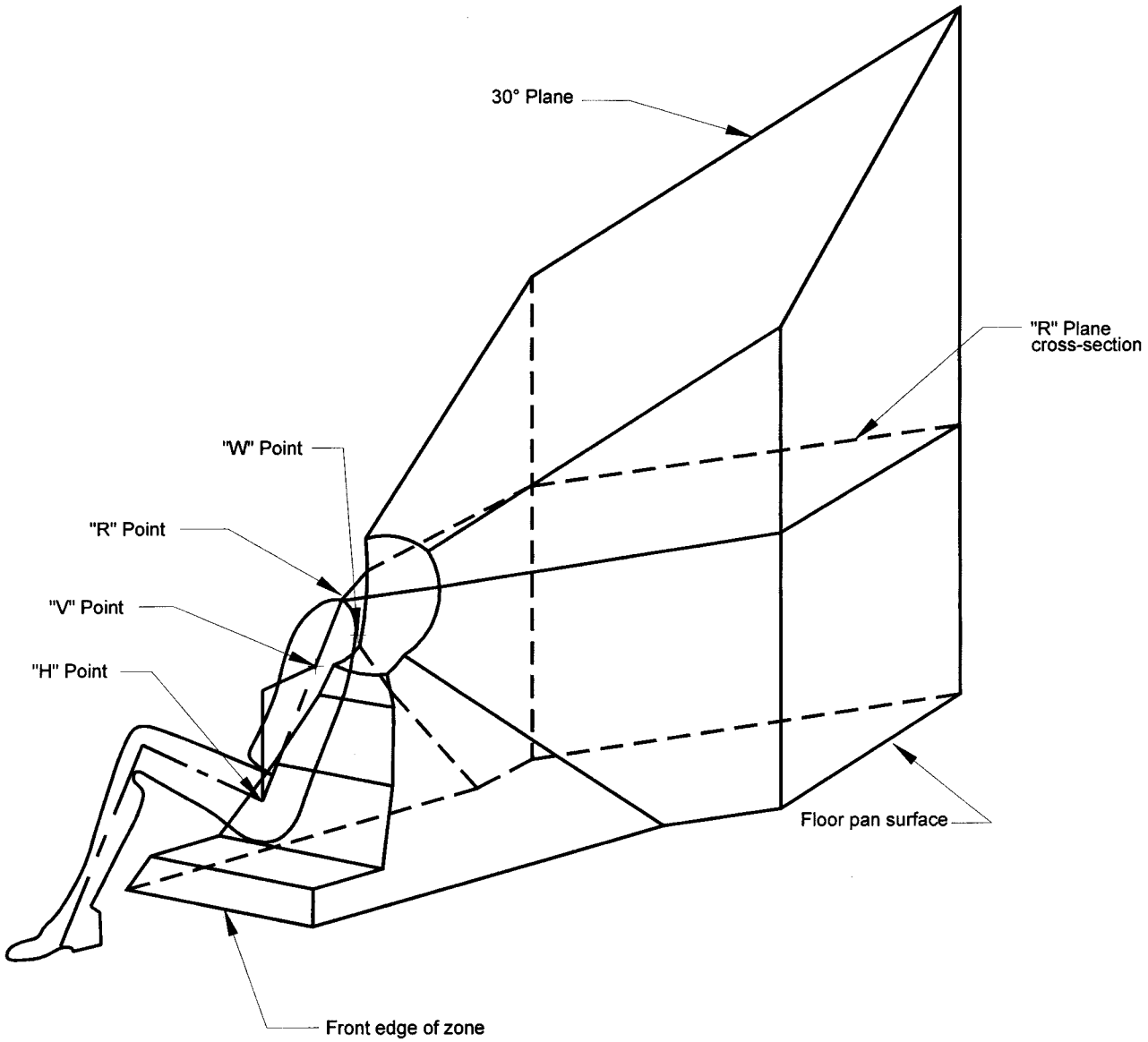

Notes

1. Portion of user-ready tether anchorage that is designed to bind with the tether strap hook to be located within shaded zone
2. Drawing not to scale
3. "R" Point: Shoulder reference point
4. "V" Point: V-reference point, 350 mm vertically above and 175 mm horizontally back from H-point
5. "W" Point: W-reference point, 50 mm vertically below and 50 mm horizontally back from "R" Point

Figure 7 -- Three-dimensional Schematic View of User-ready Tether Anchorage Location

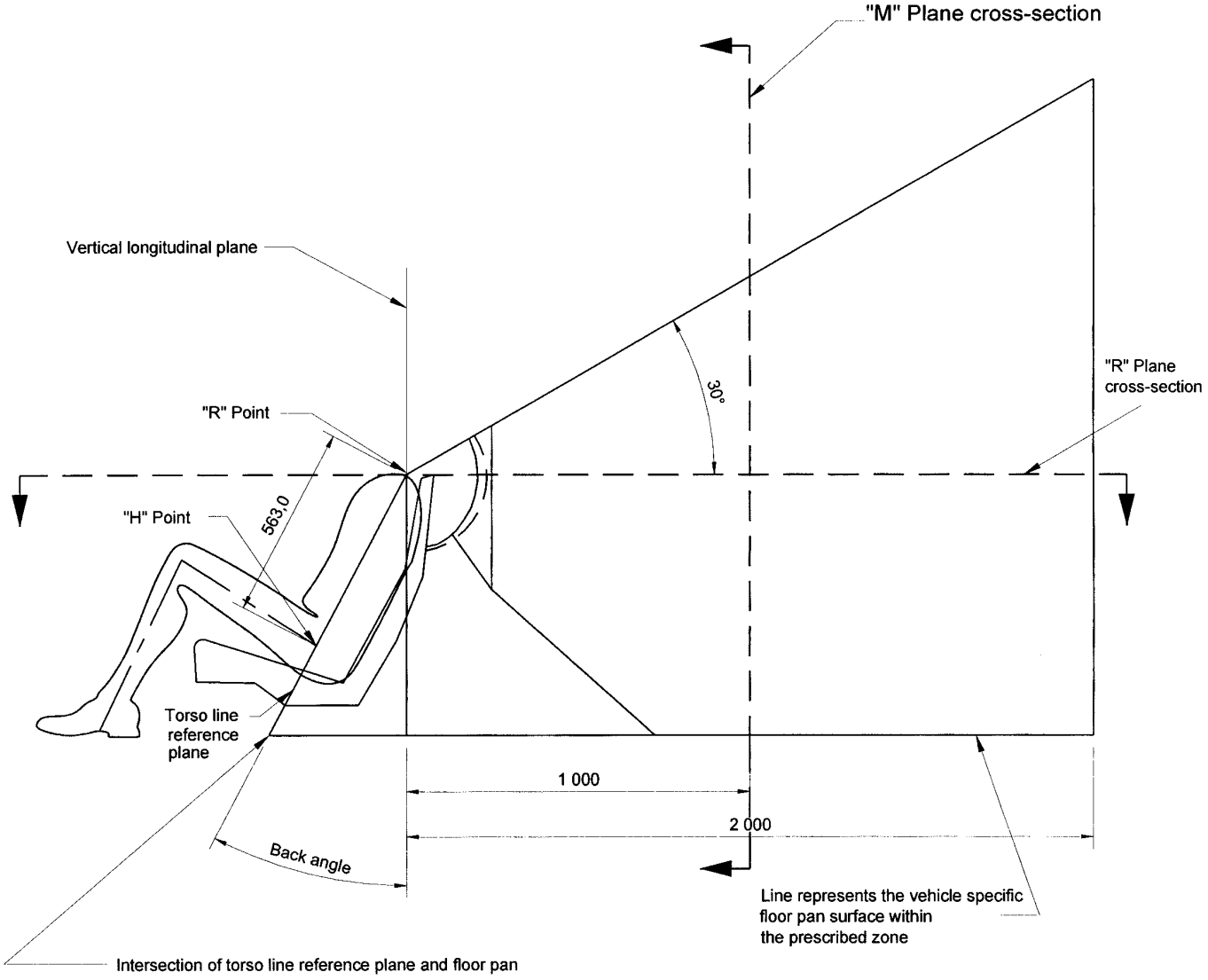

Notes

1. Dimensions in mm, except where otherwise indicated
2. Portion of user-ready tether anchorage that is designed to bind with the tether strap hook to be located within shaded zone
3. Drawing not to scale
4. "R" Point: Shoulder reference point
5. "M" Plane: M-reference plane, 1 000 mm horizontally back from "R" Point

Figure 8 -- Side View, User-ready Tether Anchorage Optional Location for Passenger Cars and Multipurpose Passenger Vehicles until September 1, 2004

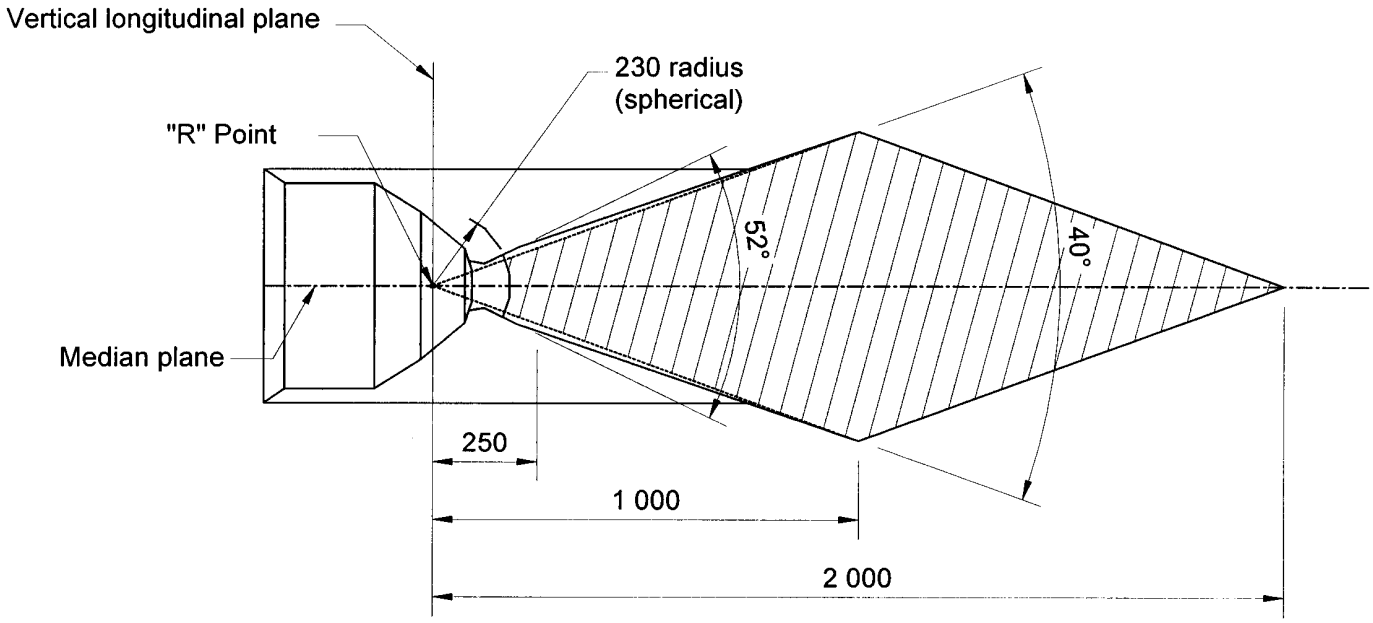

Notes

1. Dimensions in mm, except where otherwise indicated
2. Portion of user-ready tether anchorage that is designed to bind with the tether strap hook to be located within shaded zone
3. Drawing not to scale
4. "R" Point: Shoulder reference point

Figure 9 -- Plan View (R-point Level), User-ready Tether Anchorage Optional Location for Passenger Cars and Multipurpose Passenger Vehicles until September 1, 2004

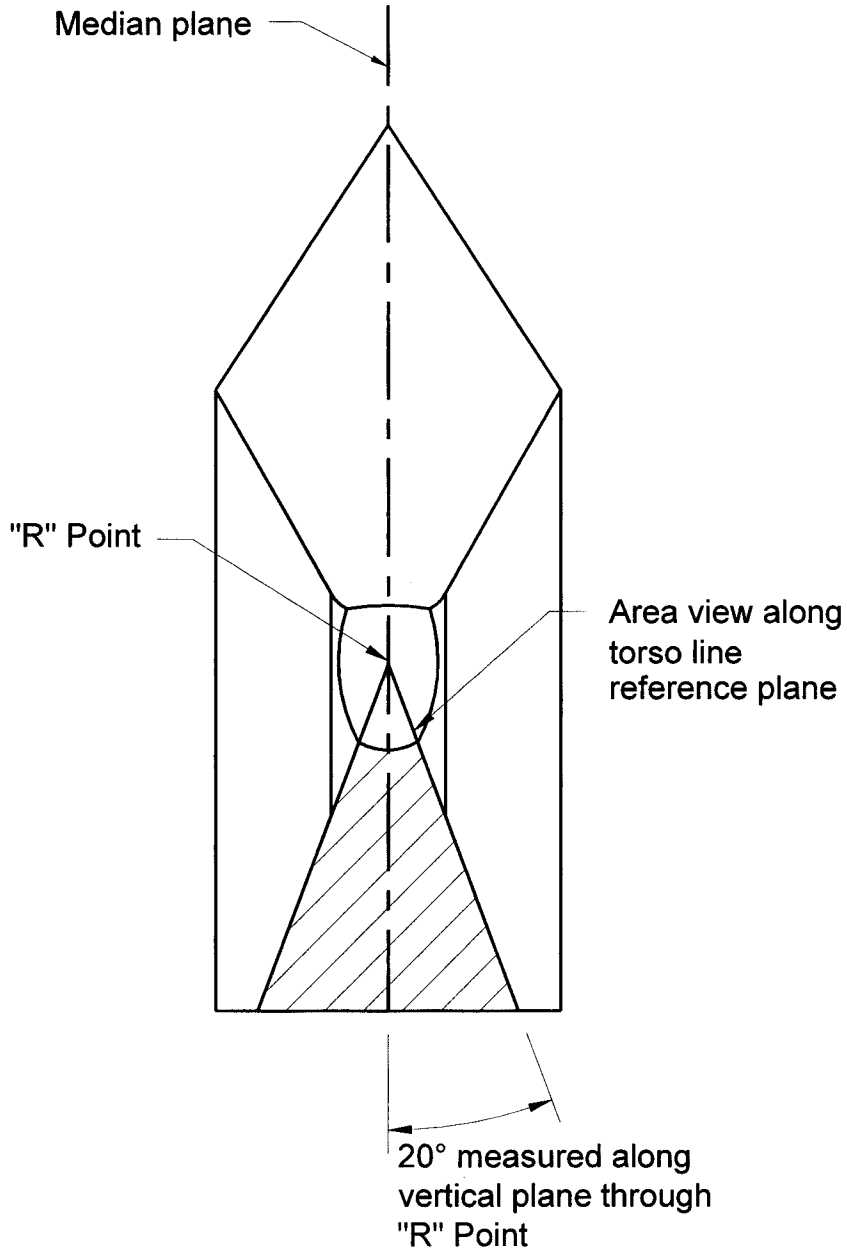

Notes

1. Portion of user-ready tether anchorage that is designed to bind with the tether strap hook to be located within shaded zone
2. Drawing not to scale
3. "R" Point: Shoulder reference point

Figure 10 -- Front View, User-ready Tether Anchorage Optional Location for Passenger Cars and Multipurpose Passenger Vehicles until September 1, 2004

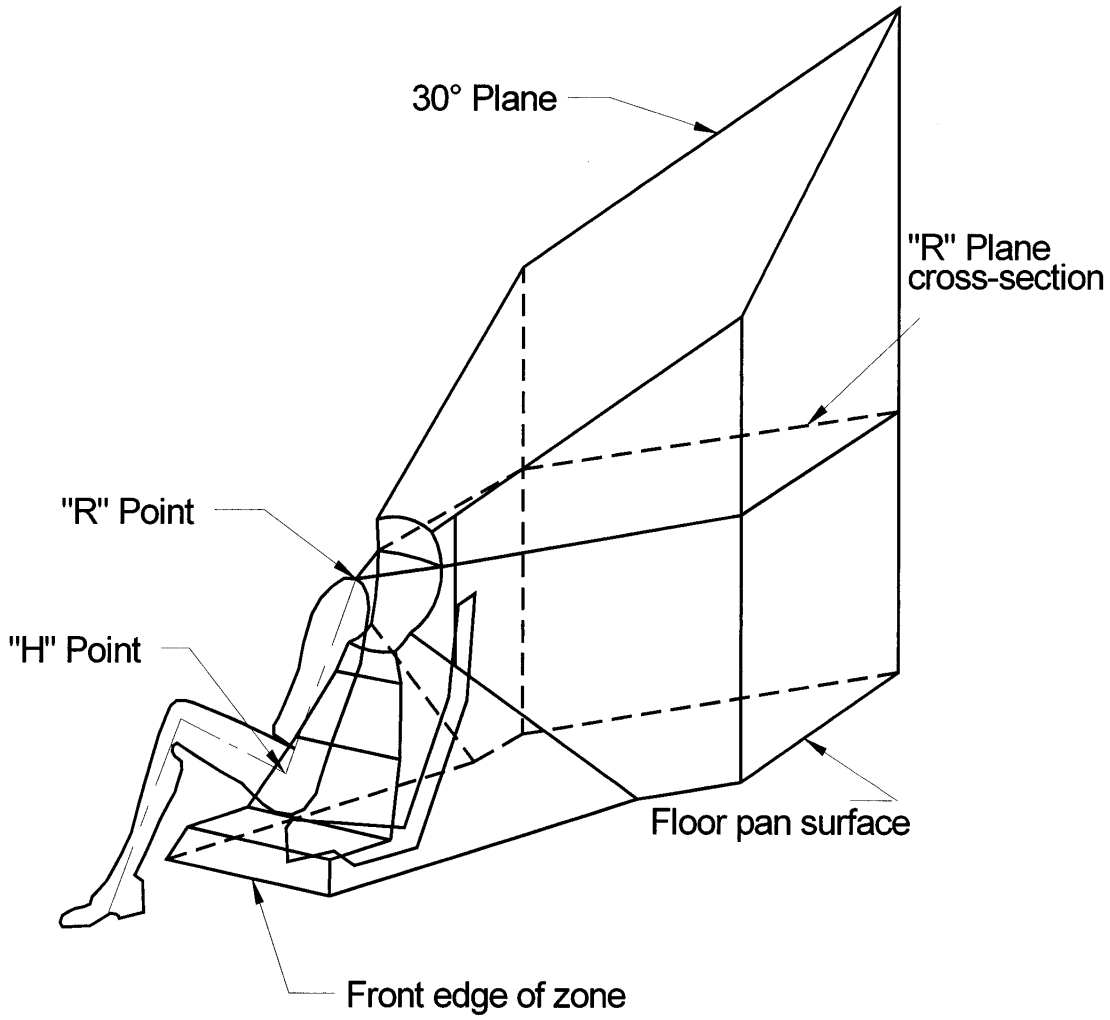

Notes

1. Portion of user-ready tether anchorage that is designed to bind with the tether strap hook to be located within shaded zone
2. Drawing not to scale
3. "R" Point: Shoulder reference point

Figure 11 -- Three-dimensional Schematic View of User-ready Tether Anchorage Optional Location for Passenger Cars and Multipurpose Passenger Vehicles until September 1, 2004

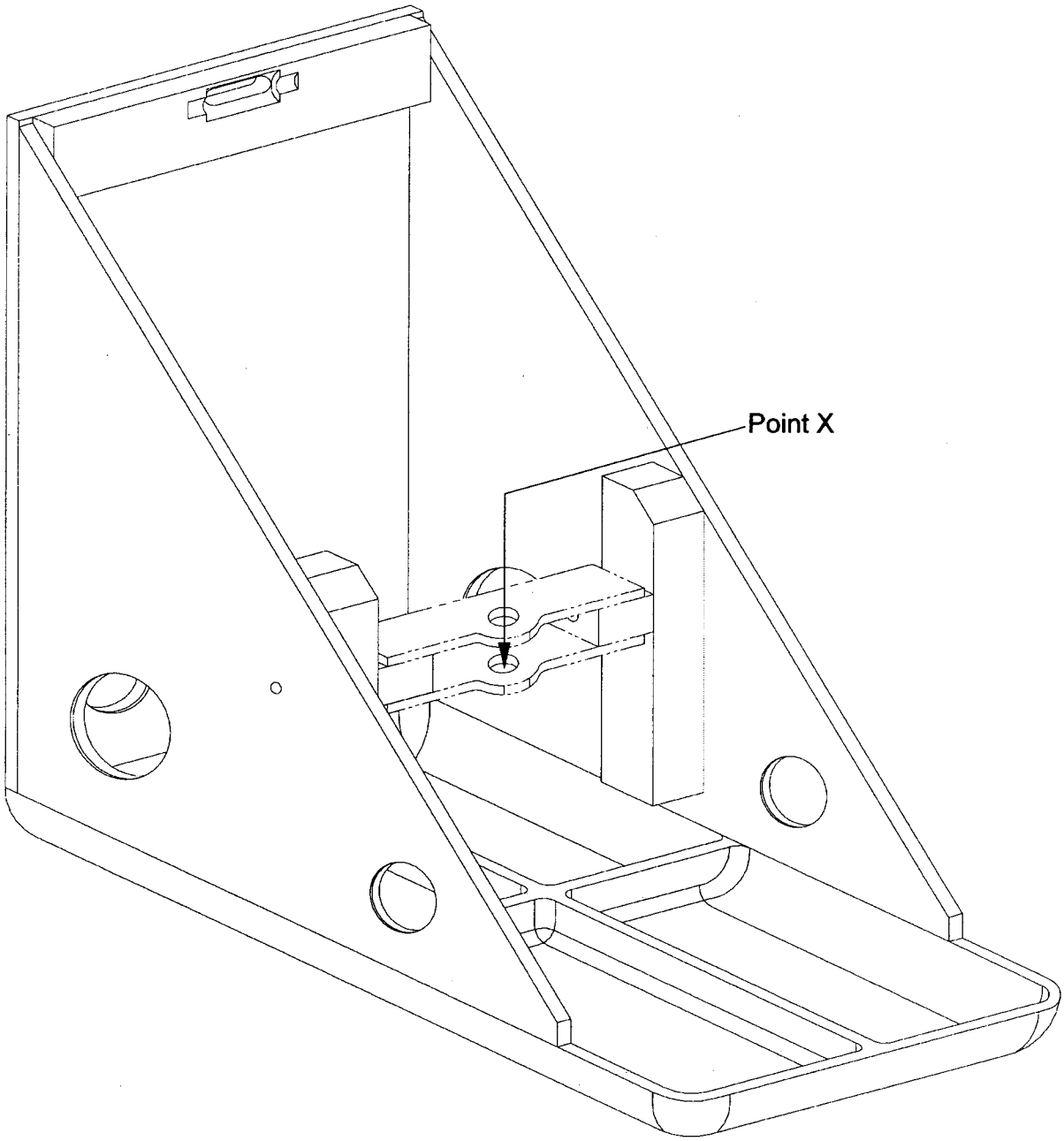

Figure 12 – Three Dimensional Schematic View of the Static Force Application Device 1 (SFAD 1)

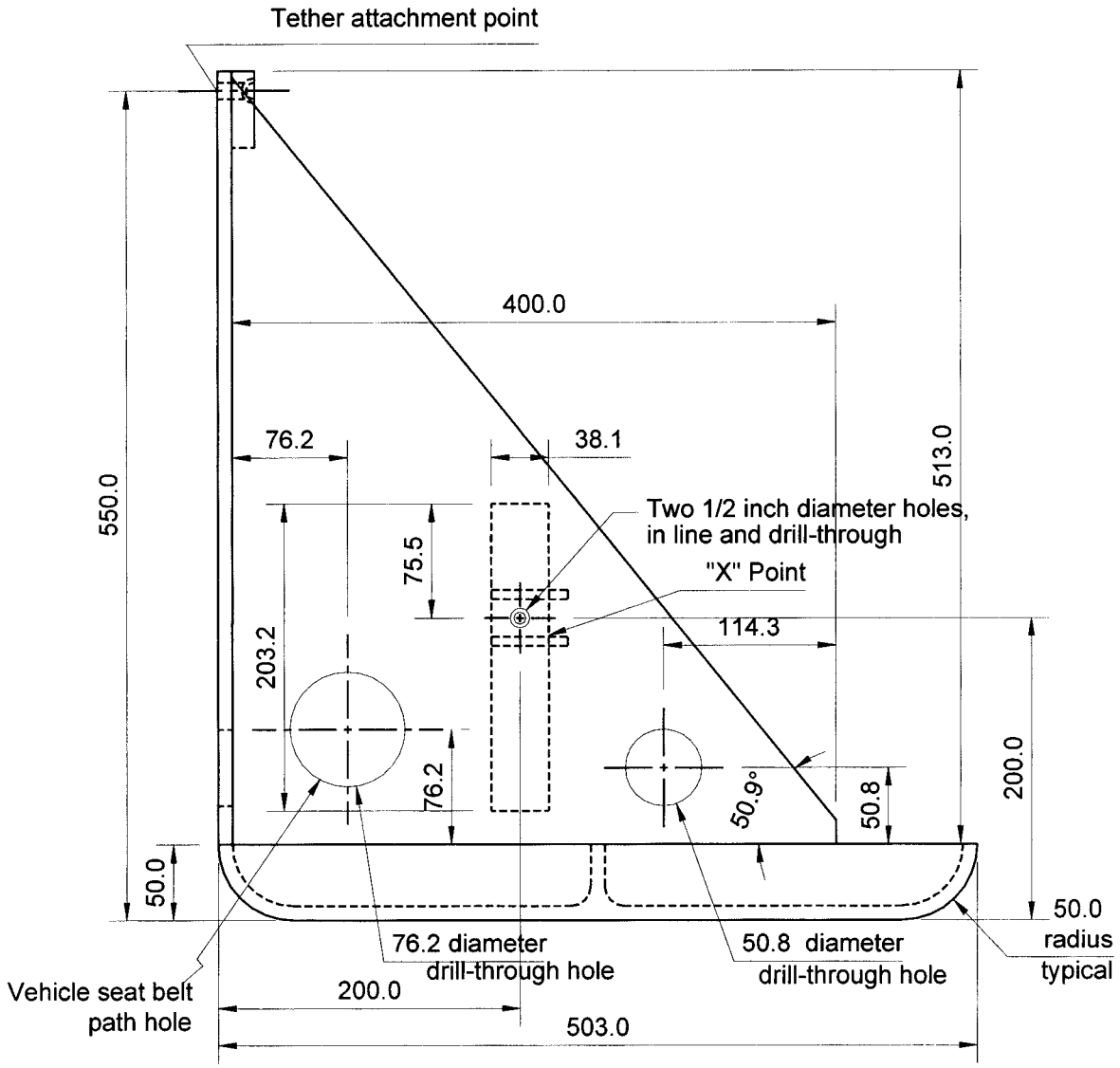

Notes

1. Material: 6061-T6-910 Aluminum
2. Dimensions in mm, except where otherwise indicated
3. Drawing not to scale
4. Break all outside corners

Figure 13 -- Side View, Static Force Application Device 1 (SFAD 1)

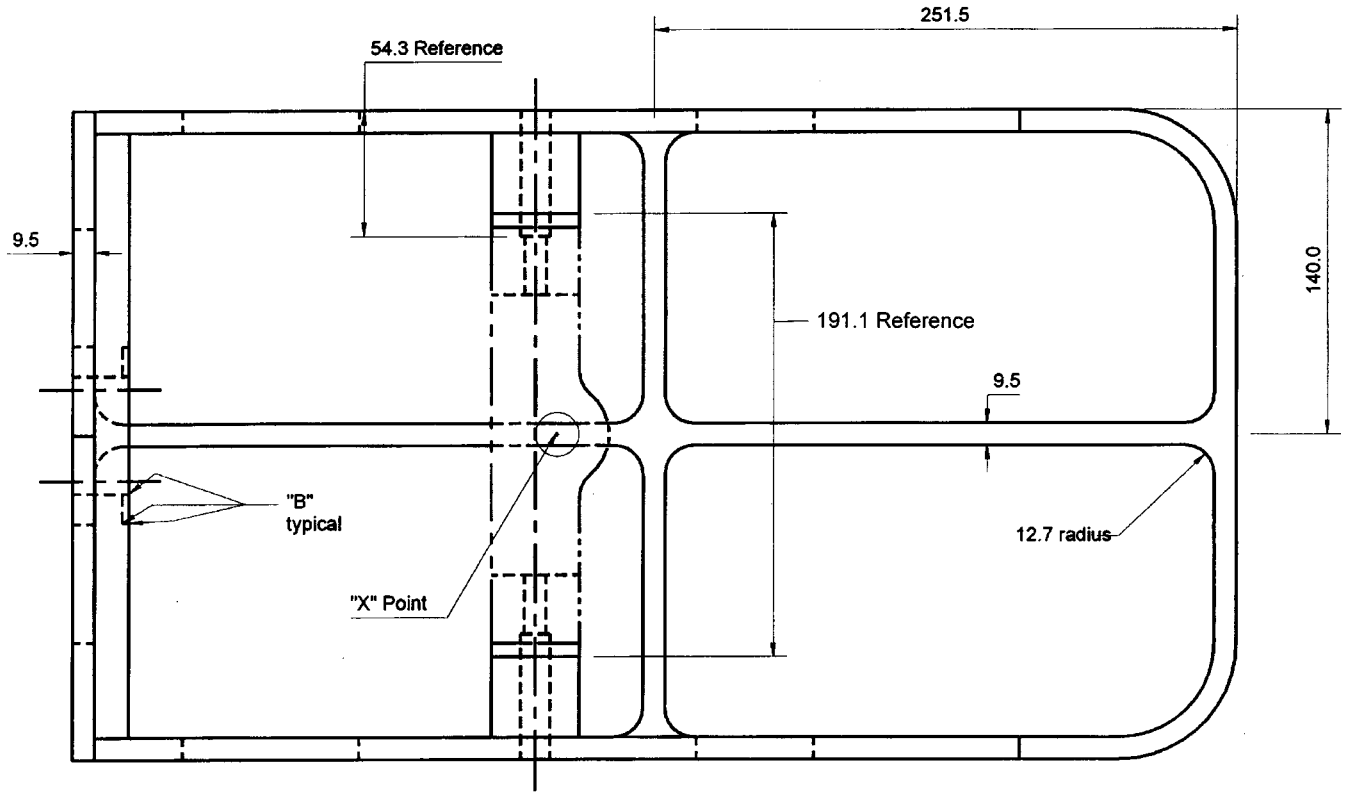

Notes

1. Material: 6061-T6-910 Aluminum
2. Dimensions in mm, except where otherwise indicated
3. Drawing not to scale
4. Break all outside corners and lightning hole edges 1.5 mm approximately.
5. Break edges of vehicle seat belt path holes at least 4 mm
6. "B" = approximately 0.8 mm

Figure 14 -- Plan View, Static Force Application Test Device 1 (SFAD 1)

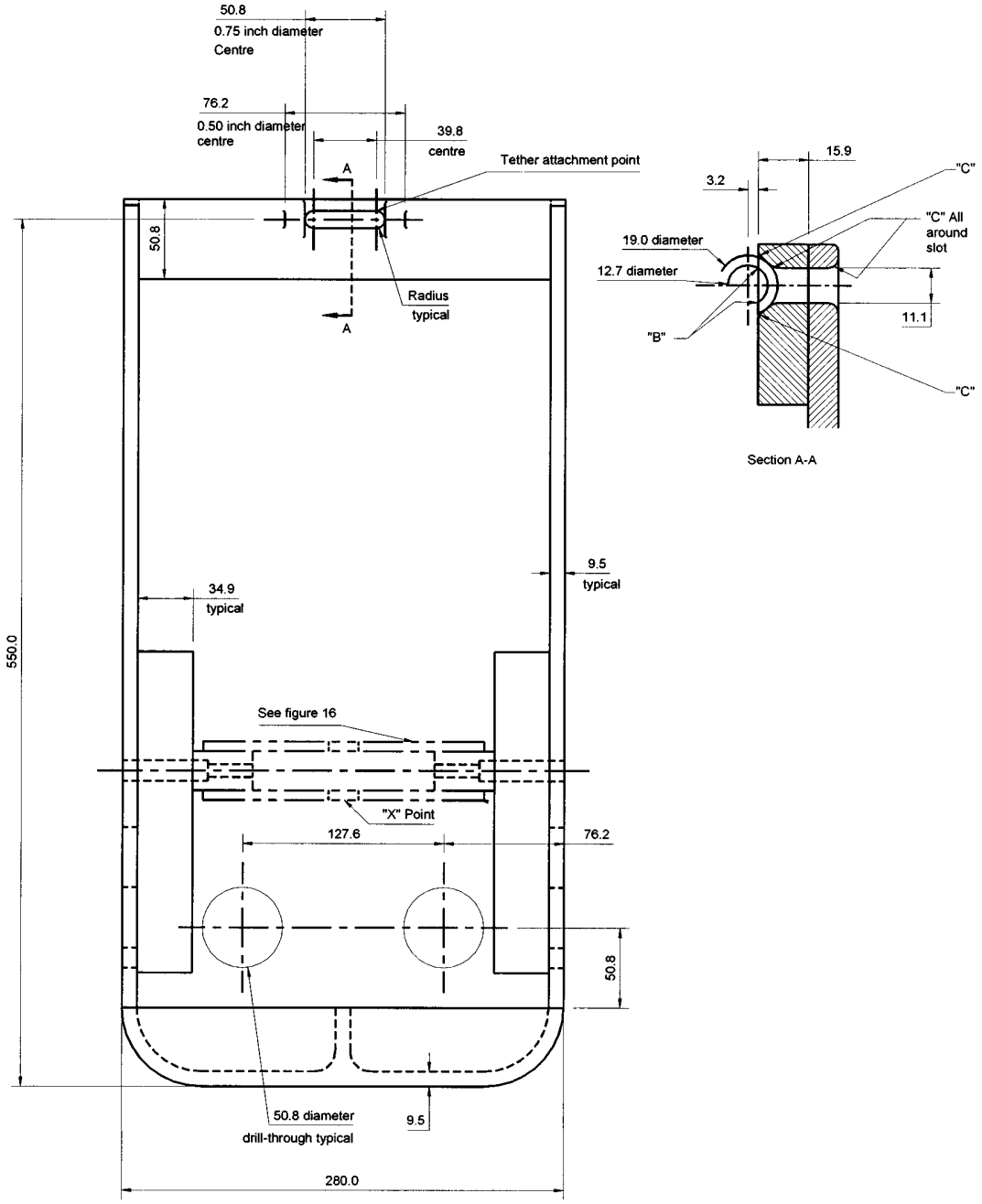

Notes

1. Material: 6061-T6-910 Aluminum
2. Dimensions in mm, except where otherwise indicated
3. Drawing not to scale
4. “B” = approximately 0.8 mm
5. “C” = approximately 3.2 mm

Figure 15 -- Front View, Static Force Application Device 1 (SFAD 1)

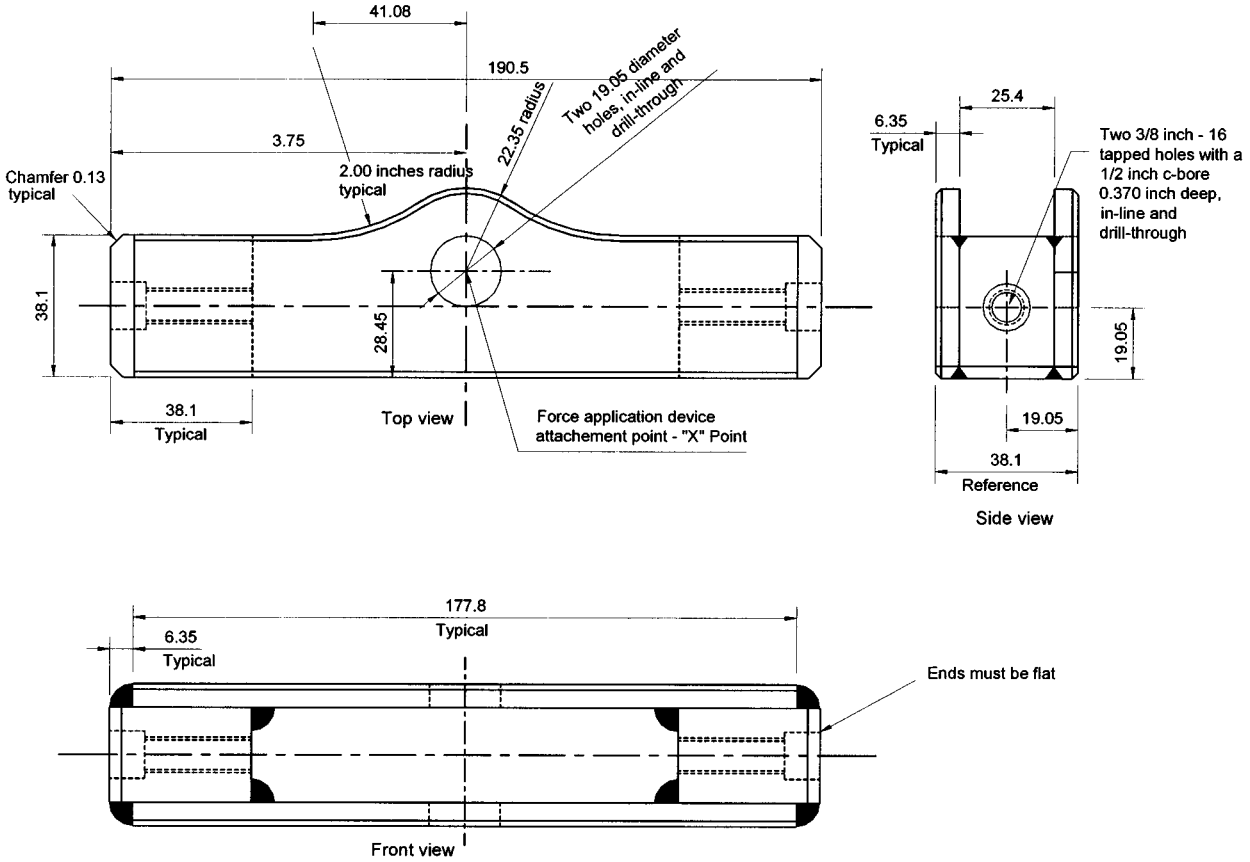

Notes

1. Material: Steel
2. Dimensions in mm, except where otherwise indicated
3. Drawing not to scale
4. Break all outside corners approximately 1.5 mm
5. Surfaces and edges are not to be machined unless otherwise specified for tolerance.
6. Saw-cut or stock size material whenever possible.
7. Construction to be securely welded.

Figure 16 -- Cross Bar, Static Force Application Device 1 (SFAD 1)

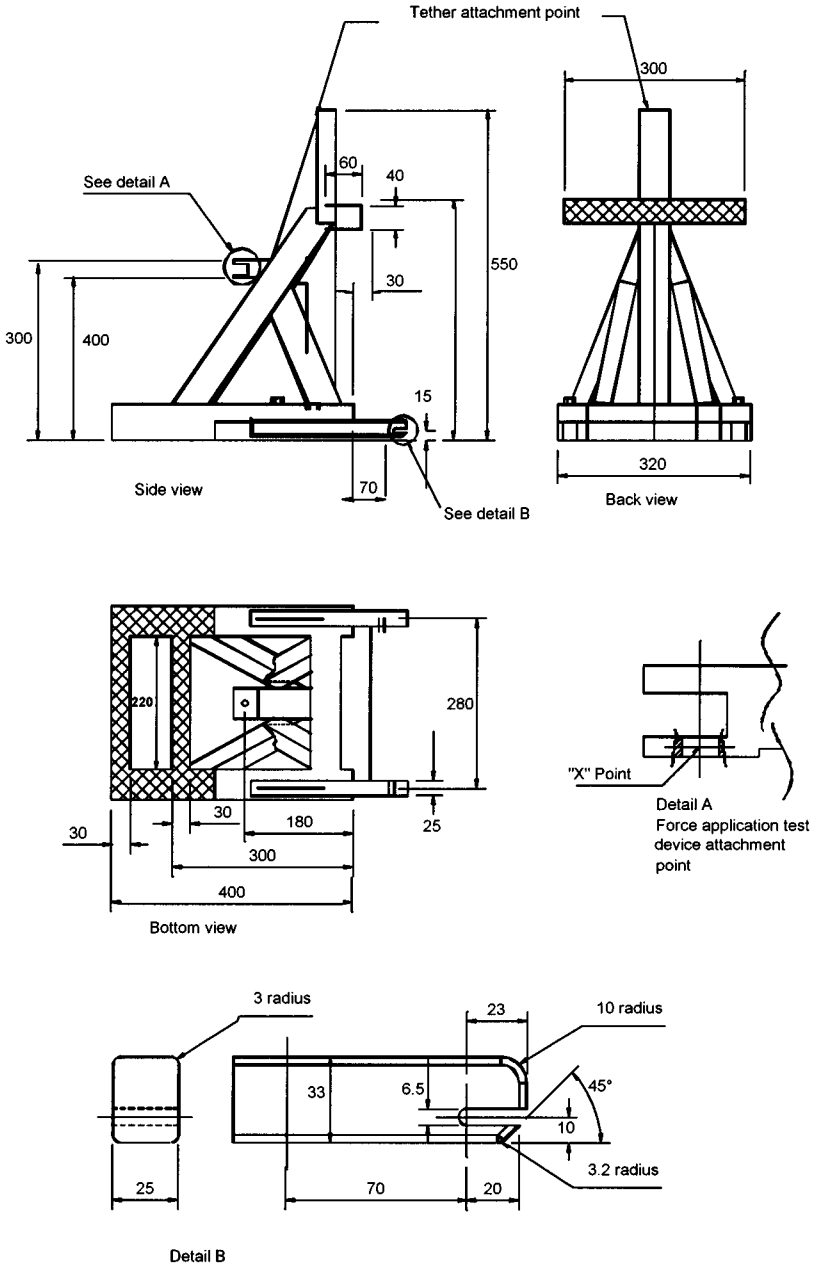

Notes

1. Material: steel, mild steel rectangular tubing 50 mm by 75 mm of 3 mm nominal thickness, with 6 mm thick force application test device attachment point plate.
2. Securely welded construction
3. Dimensions in mm, except where otherwise indicated
4. Drawing not to scale

Figure 17 -- Side, Back and Bottom Views, ISO 13216-1 Static Force Application Device 2 (SFAD 2)

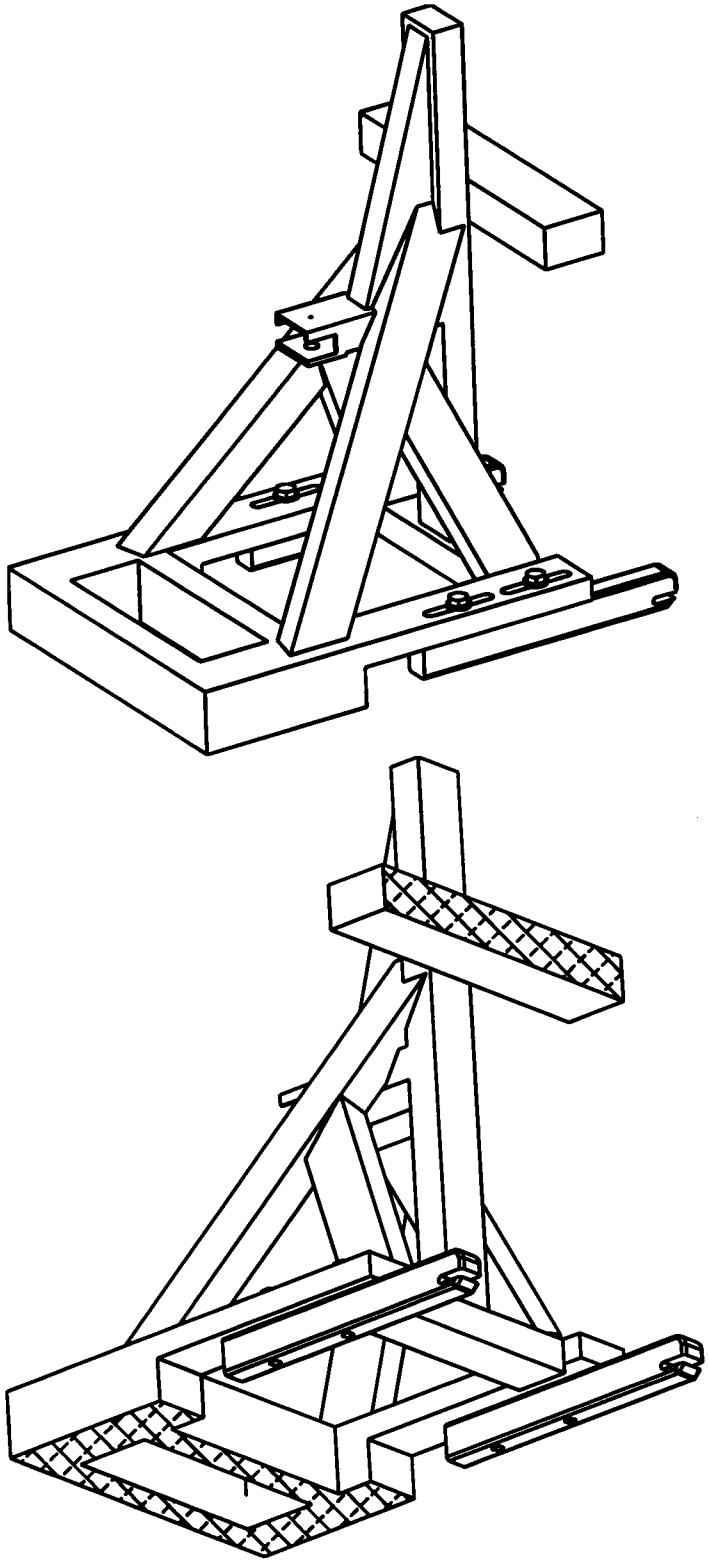

Figure 18 -- Three-dimensional Schematic Views of the ISO 13216-1 Static Force Application Device 2 (SFAD 2)

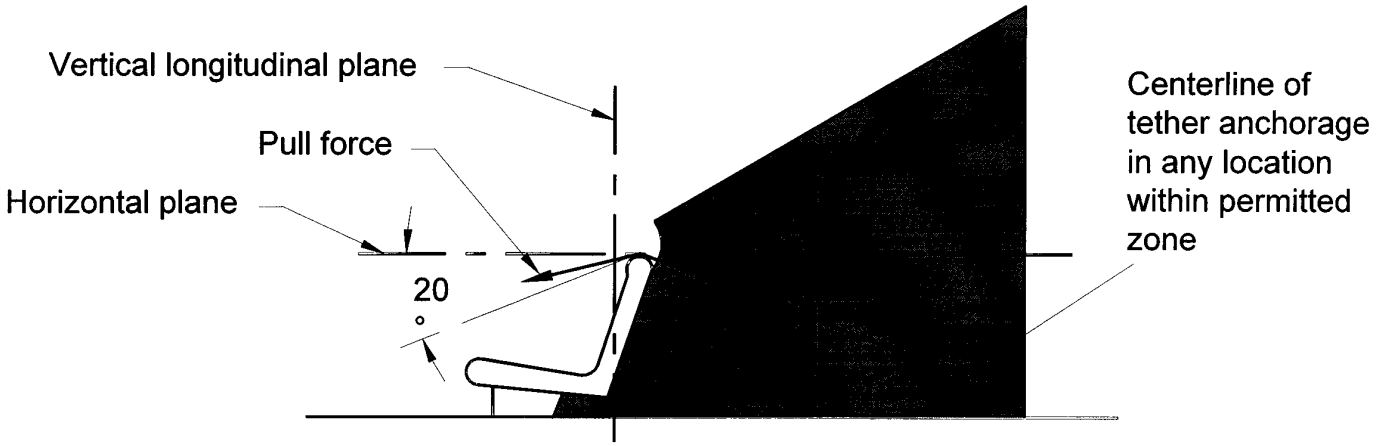

Figure 19 – Side View, Optional Tether Anchorage Test for Passenger Cars until September 1, 2004

BILLING CODE 4910–59–P

5. Part 596 is added to read as follows:

PART 596—CHILD RESTRAINT ANCHORAGE SYSTEM PHASE-IN REPORTING REQUIREMENTS

Sec.
596.1 Scope.
596.2 Purpose.
596.3 Applicability.
596.4 Definitions.
596.5 Response to inquiries.
596.6 Reporting requirements.
596.7 Records.
596.8 Petition to extend period to file report.

Authority: 49 U.S.C. 322, 30111, 30115, 30117, and 30166; delegation of authority at 49 CFR 1.50.

§ 596.1 Scope.

This part establishes requirements for manufacturers of passenger cars, and of trucks and multipurpose passenger vehicles with a gross vehicle weight rating (GVWR) of 3,855 kilograms (8,500 pounds) or less, and of buses with a GVWR of 4,536 kg (10,000 lb) or less, to submit a report, and maintain records related to the report, concerning the number of such vehicles that meet the requirements of Standard No. 225, *Child restraint anchorage systems* (49 CFR 571.225).

§ 596.2 Purpose.

The purpose of these reporting requirements is to assist the National Highway Traffic Safety Administration in determining whether a manufacturer has complied with Standard No. 225 (49 CFR 571.225).

§ 596.3 Applicability.

This part applies to manufacturers of passenger cars, and of trucks and multipurpose passenger vehicles with a gross vehicle weight rating (GVWR) of 3,855 kilograms (8,500 pounds) or less, and of buses with a GVWR of 4536 kg (10,000 lb) or less. However, this part does not apply to vehicles excluded by S5 of Standard No. 225 (49 CFR 571.225) from the requirements of that standard.

§ 596.4 Definitions.

(a) All terms defined in 49 U.S.C. 30102 are used in their statutory meaning.

(b) Bus, gross vehicle weight rating or GVWR, multipurpose passenger vehicle, passenger car, and truck are used as defined in 49 CFR 571.3.

(c) *Production year* means the 12-month period between September 1 of one year and August 31 of the following year, inclusive.

§ 596.5 Response to inquiries.

At anytime during the production years ending August 31, 2000, August 31, 2001, and August 31, 2002, each manufacturer shall, upon request from the Office of Vehicle Safety Compliance, provide information identifying the vehicles (by make, model and vehicle identification number) that have been certified as complying with Standard No. 225 (49 CFR 571.225). The manufacturer's designation of a vehicle as a certified vehicle is irrevocable.

§ 596.6 Reporting requirements.

(a) *General reporting requirements.* Within 60 days after the end of the production years ending August 31, 2000, August 31, 2001, and August 31, 2002, each manufacturer shall submit a report to the National Highway Traffic Safety Administration concerning its compliance with the child restraint anchorage system requirements of Standard No. 225 (49 CFR 571.225) for its passenger cars, trucks, buses, and multipurpose passenger vehicles produced in that year. Each report shall—

(1) Identify the manufacturer;

(2) State the full name, title, and address of the official responsible for preparing the report;

(3) Identify the production year being reported on;

(4) Contain a statement regarding whether or not the manufacturer complied with the child restraint anchorage system requirements of Standard No. 225 (49 CFR 571.225) for the period covered by the report and the basis for that statement;

(5) Provide the information specified in paragraph (b) of this section;

(6) Be written in the English language; and

(7) Be submitted to: Administrator, National Highway Traffic Safety Administration, 400 Seventh Street, S.W., Washington, DC 20590.

(b) *Report content.*

(1) *Basis for phase-in production goals.* Each manufacturer shall provide the number of passenger cars and trucks and multipurpose passenger vehicles with a gross vehicle weight rating (GVWR) of 3,855 kilograms (8,500 pounds) or less, and buses with a GVWR of 4,536 kg (10,000 lb) or less manufactured for sale in the United States for each of the three previous production years, or, at the manufacturer's option, for the current production year. A new manufacturer that has not previously manufactured these vehicles for sale in the United States shall report the number of such vehicles manufactured during the current production year.

(2) *Production.* Each manufacturer shall report for the production year for which the report is filed: the number of passenger cars and trucks and multipurpose passenger vehicles with a gross vehicle weight rating (GVWR) of 3,855 kilograms (8,500 pounds) or less, and buses with a GVWR of 4,536 kg (10,000 lb) or less, that meet Standard No. 225 (49 CFR 571.225).

(3) *Vehicles produced by more than one manufacturer.* Each manufacturer whose reporting of information is affected by one or more of the express written contracts permitted by S13.1.2(c) and S14.2.2 of Standard No. 225 (49 CFR 571.225) shall:

(i) Report the existence of each contract, including the names of all parties to the contract, and explain how the contract affects the report being submitted.

(ii) Report the actual number of vehicles covered by each contract.

§ 596.7 Records.

Each manufacturer shall maintain records of the Vehicle Identification Number for each vehicle for which information is reported under § 596.6(b)(2) until December 31, 2004.

§ 596.8 Petition to extend period to file report.

A manufacturer may petition for extension of time to submit a report under this Part. A petition will be granted only if the petitioner shows good cause for the extension and if the extension is consistent with the public interest. The petition must be received not later than 15 days before expiration of the time stated in § 596.6(a). The filing of a petition does not automatically extend the time for filing a report. The petition must be submitted to: Administrator, National Highway Traffic Safety Administration, 400 Seventh Street, S.W., Washington, D.C. 20590.

Note: The following appendices will not appear in the Code of Federal Regulations.

Appendix A—NHTSA's Evaluation of Cosco's Car Seat Only System

In the NPRM, the agency tentatively rejected Cosco's Car Seat Only (CSO) system as an alternative to the proposed child restraint anchorage system. Cosco opposed this in its comment.

Cosco believed that the flexible latchplate system, and by implication the rigid bar anchorage system, will increase costs and result in a significant increase in the number of infants and young children killed and injured. Cosco said it retained Dr. Larry M. Newman and Dr. Alan R. Winman to analyze price sensitivity for child restraints. They concluded that: (a) The retail price for car seats would increase from 28 to 110 percent; (b) the lower priced seats would suffer the biggest percentage increase, so those persons least able to purchase a new car seat would see the greatest proportionate increase in

price; (c) 10 percent of these low priced seats would not be purchased if prices increase as estimated with the flexible latchplate system, resulting in 283,000 fewer car seats in use annually and 122,000 fewer seats available through hospital and loaner programs, and thus in a total of 405,000 fewer children being restrained in car seats annually (which is estimated to be 6.6 percent of car seats sold through all channels of distribution in 1995); and (d) the 6.6 percent reduction in usage would result in 33 deaths and 33,000 serious injuries annually to children under age five. Cosco argued that child restraint purchasers are not willing to pay for a safety feature, and that State mandatory use laws will not ''encourage the use of new expensive car seats to a greater extent than they do today * * *.''

Cosco suggested that its CSO system is less costly than flexible latchplate system and can be implemented faster. It believed that the CSO belt is not likely to be misrouted on today's child restraints that have all-molded shells and only one labeled belt path. ''Misrouting is not cited as a significant misuse in clinic studies. It is a non-factor today and should not be considered as an issue.'' Cosco acknowledged that a belt adjuster would be needed for the CSO and suggested that a high tension automatic locking retractor (ALR) would eliminate concerns about the ability to cinch up the CSO belt. In addition, Cosco suggested that the CSO belt could be color coded, labeled, and otherwise distinguished from the adult passenger belt, to ensure that passengers would not mistakenly use the CSO belt for their own restraint.

In opposing the CSO system, Ford said that it agreed with most of the reasons that NHTSA provided in the NPRM explaining why the system did not appear satisfactory as a universal anchorage system. Ford also stated—

Our primary concern is that the CSO system may not provide the level of CRS crash performance available in current and future vehicles with lockable lap/shoulder belts. The CSO system would add substantial cost and weight to every vehicle, with a potential degradation in CRS safety. In addition, Cosco's claim that the CSO system could be installed quickly is inaccurate. If vehicle manufacturers were to install the CSO system without adding new, relocated anchorages for the CSO belts, the resulting CRS performance would not be as good as installation with current lap/shoulder belts. Acceptable installation of the CSO system would require new anchorages in most vehicles, and thus would take as much leadtime as any other CRS anchorage system.

NHTSA's Response to Cosco

NHTSA disagrees with Cosco's economic argument, and with Cosco's views about the advantages it perceives in the CSO system.

The agency agrees that, under normal economic conditions, an increase in prices may result, depending on the price elasticity of demand, in a decrease in quantity demanded. The classical way of estimating price elasticity of demand is to examine the change in sales volume when there is a price increase or decrease, but the product remains the same. However, as noted above, and further discussed in the FEA, the agency believes that the demand for child restraints is highly inelastic. This conclusion is supported by the fact that child restraints can be considered a necessity since their use is regulated in every State. Also, the information provided by Cosco to the Docket (Docket number 96–095–N03–050), see Cosco's Infant Car Seat by Price Segment, Table 2, indicates that price is not the only criterion affecting sales. If it were, then the lowest priced child restraints would have the highest sales volume. However, they do not. In fact, some of the higher priced child restraints have the higher sales volumes. Thus, consumers recognize different qualities in different models of child restraints. Some consumers are clearly willing to pay more for these perceived better qualities.

A child restraint equipped for an independent anchorage system is a safer product than conventional child restraints. When the safety aspects of such a child restraint are advertised, consumers will know that they are getting a better product. Based on clinical trials, consumers who tried these new child restraints indicated that they were willing to pay a higher price for these systems than the incremental cost estimates. The researchers in the Canadian study stated that the concern for significant reduction in child restraint use if advanced designs result in a small price increase was not supported in the study. The participants were willing to pay higher prices for systems that they perceive are better than today's child restraint systems. ''Usability Trials of Alternative ISOFIX Child Restraint Attachment Systems,'' (ICBC, 1996). Ford (035), Gerry Baby Products Company (039), Indiana Mills and Manufacturing Inc. (040), and Volvo (053), commenting to the docket on this issue, stated that child restraints were not price sensitive.

Finally, even if there were an adverse effect on the child restraint market, especially the low end of that market, NHTSA believes that the hospitals and loaner programs would be able to provide child restraints for persons who wanted them but chose not to buy one because of the price increase. From discussions with some of these entities (hospitals and loaner programs), the agency has found that they were eager to have the new seats because of their improved safety and also because of their greater ease of installation. Many of them believed that they would be able to obtain enough funds to purchase the new seats without any major change in the number of seats they are able to provide to the public. In addition, the American Academy of Pediatrics commented that it believes that loan programs will be able to gradually acquire child restraints with the newly designed attachment system.

NHTSA continues to believe that one of the CSO's main disadvantages is that it is essentially no different from the current lap belt means of attaching child restraints to vehicle seats. The agency remains concerned that the CSO system might not make attaching a child restraint significantly easier than it is today. In the agency's view, one limitation is that the CSO belt would have to be correctly routed through the child restraint. In the NPRM, NHTSA said that manufacturers believe many consumers find current routing difficult to achieve. (In the October 1996 public workshop, Dave Campbell of Century and Klaus Werkmeister of BMW, among others, referred to routing issues.)

The agency disagrees with Cosco's argument that proper routing of belts is not an issue today in installing child restraints. In the report ''Patterns of Misuse of Child Safety Seats,'' above, the researchers found a 6 percent rate of misuse of child restraints in use today due to misrouted seat belts with infant, convertible and booster seats. The consequences resulting from this particular type of misuse are more disastrous than those from other misuses that may occur more frequently, such as the incorrect use of a locking clip. Canada found in the clinic described in the NPRM (62 FR at 7864) on the usability of various attachment systems that, while the flexible latchplate and rigid bar anchorage system child restraints were attached to the proper vehicle anchorages by every participant, the lap belt system was secured by only 63 (82.9 percent) participants. ''Of the 13 participants who failed to secure the child restraint in this manner, 5 gave up, one failed to engage the buckle and one participant routed the seat belt through multiple ports. The remaining 6 participants routed the lap belt [for the forward-facing seat] through the rear-facing slots.'' (ICBC, 1996).

In addition, as explained in the NPRM, consumer clinics have uniformly found that people highly dislike the conventional means of attaching child restraints by way of the vehicle's belts. In the Canadian study, participants rated the ease of installation for different systems on a five point scale (1=very difficult to 5=very easy). Participants at the end of the trials showed no strong preference between the ISOFIX (rated 4.3), CANFIX (4.6), UCRA (4.4) and ISO (4.1) systems. ''The conventional [lap belt] system, however, was the last choice of the majority of participants and was rated poorly in terms of ease of installation [3.1] and perceived safety.'' As noted above, the Canadian study reports that participants were willing to pay higher prices for systems that they perceive are better than the lap belt system. Because the CSO system is basically a lap belt system, the agency believes the findings made in these studies are applicable to the CSO as well.

The NPRM indicated that the CSO system may be difficult to tighten because photographs of the belt showed the retractor in a place that may make it difficult for consumers to reach or tighten the belt. The Canadian study found that the lap belt system had the worst rate of proper installation, i.e., use of correct attachment points and seat belt routing with no more than a given amount of forward excursion of the top and lower part of the child restraint. Recognizing the difficulty of cinching the CSO belt as initially presented in its petition, and the importance of a tight fit, Cosco commented that a high-tension ALR retractor could be installed on the belt, to the rear of the seat bight, at a cost that would be ''not that much greater than the proposed UCRA.''

(Cosco did not provide a specific cost estimate.) Even without the ALR, however, Ford opposed the CSO system, believing that the CSO system would add substantial cost and weight to every vehicle, with a potential degradation in CRS safety. Ford believed the CSO does not provide as many safety benefits as a lap/shoulder belt system because it believed that the shoulder portion of the Type II system, routed through the back of the child restraint, would restrain the top of a child restraint similar to the effect of a tether. Further, apparently the advantage that Cosco claimed in terms of leadtime is incorrect. Ford stated that the CSO system would take as long to install in vehicles as any other attachment system. With regard to the comment of Hartley Associates that the CSO had an advantage in post-crash situations because emergency personnel need only release one attachment point versus more than one point, NHTSA has no information indicating that extrication by emergency personnel is a problem area in need of attention at this time.

The agency disagrees that the risk of misuse would be sufficiently addressed by, as suggested by Cosco, having the CSO colored orange, having ''Car Seat Use Only'' woven or imprinted into it, and having the high tension ALR retractor a part of it. NHTSA is especially concerned about children who may be buckled in a belt-positioning booster seat using the CSO belt or who may be buckled into the CSO by itself on the vehicle seat. If a child is buckling him or herself, the risk that confusion or unintended misuse will occur is even greater. The safety consequences of a child wearing only a lap belt is greater than that of an adult using a lap belt. When a lap belt is used to restrain a child restraint, NHTSA has observed that the angle formed by the belt from the perpendicular is about 20 degrees. Given Cosco's assumption that the CSO belt would be used to restrain a child restraint in the same manner that a lap belt is now used, NHTSA assumes that the angle that would be formed by the CSO belt would be about 20 degrees also. Twenty degrees is much too shallow an angle for the lap belt to be safely positioned in a crash, on the occupant's pelvis, where the bones are hard and well formed and better able to withstand crash forces compared to the soft, vulnerable organs and tissues of the abdominal area. Even if the belt were to be placed on the child's pelvis, there could be safety problems in a crash. A child's pelvis not as well formed as an adult's, and a belt has a tendency to slide over the pelvis (unencumbered by bony ''hooks'' that are formed on the adult pelvis) onto the abdominal area. Also, children tend to slouch on the vehicle seat so that they can ride comfortably. They do this because when they sit upright, their legs are too short to enable them place their knees at the front edge of the seat cushion. Slouching increases the likelihood of the child's lower body sliding forward (submarining) in a crash, which would further relocate the lap belt upward on the child's abdomen. Further, because the CSO belt is narrower than a lap belt provided for occupant protection, the narrower width concentrates belt loads on the abdomen to a greater degree than a seat belt.

For the reasons stated above, the agency believes the CSO system is not a viable child restraint anchorage system. Action on Cosco's petition is hereby withdrawn (terminated).

Appendix B—NHTSA's Evaluation of AAMA/AIAM Clinic Results

AAMA and AIAM asked MORPACE International, Inc., to conduct a clinic comparing consumer likes and dislikes involving the flexible latchplate and rigid bar anchorage systems. The clinic was held April 15–20, 1998, in Novi, Michigan. Two hundred fifty-four (254) individuals were asked to evaluate seven child restraint ''systems'' with respect to installation, operation and security. All seven systems consisted of the same model of Century child restraint, each with a different attachment system. These clinic participants indicated their first, second and last choice of restraint system, before and after being informed of the prices of the systems. A subsample (less than 10 percent) also participated in ''exit interviews'' to help provide insight into their responses.

When presented with the seven systems to choose from, 39 percent of the participants preferred the Strap Based Buckle Connector (M) system (UCRA system). The participants were offered only one buckle system to choose from, but were offered three choices of the rigid bar anchorage system (Strap-Based Snap Hook Connector [R], Bracket-Based Connector [L], and Strap-Based Connector [S]). A complementary system to M, the Bracket-Based Latchplate Buckle Connector (P) system, was universally not preferred by participants. System P consisted of a buckle holder on the vehicle seat that rigidly-mounted latchplates on the child restraint system insert into.

The agency believes that the study does not offer anything conclusive about preferences for the options, other than system P was universally not a first choice. While participants gave higher preference to the flexible latchplate anchorage system in the clinic, NHTSA cannot conclude that the results support either a flexible latchplate or a rigid bar anchorage system.

Sample of Participants Not Intended To Be Representative of U.S. Population

Results are based on a purposively selected focus group. The document does not indicate how the 254 individuals were selected to participate in the clinic, other than to say that they were ''recruited.'' This recruiting apparently was quota driven as it appears that it strived to obtain certain demographics. Summary information about the group was provided in the supporting ''Data Tabulations.'' All but three participants indicated that they had at least one seat in their household. Vehicle ownership was split 54 percent automobiles to 46 percent ''trucks.'' Females and males were similar in number. ''Empty nesters,'' which we assume to mean care givers without their own children in residence, represented 24 percent of those recruited. The remaining sample was split almost evenly between those under a ''median age'' and those at or above that age. Forty-two percent were college graduates.

NHTSA is not able to determine how closely (or not) the characteristics of the people included in this focus group correspond to those of the population that would be most likely to purchase child safety seats. It appears that those included in this focus group were selected to match certain quota in order to produce a balance. As such, this focus group is not a probability based sample and cannot be assumed to be. Its results cannot be generalized to represent all potential purchasers. Any regional bias is not accounted for; we assume all participants were from Michigan. Because it is not a statistical sample, it is not possible to say that there is any statistical difference between the responses as they relate to any population of interest. Responses are representative of the focus group only.

Confounding Factors—Systems Presented Were Not Representative of Systems as They Are Likely To Be Produced

The flexible latchplate system used in the clinic is different from the one in the NPRM. It is not a pure flexible webbing system as described by GM. The flat latchplate was imbedded in a material that was semi-rigidly attached to a structure in the seat bight. This anchorage system was practically fixed, i.e., did not allow its being pushed in the direction of the seat bight. This feature simulates the property of rigidity of the 6 mm fixed bar. Further, the child restraint systems for the flexible latchplate system, and other child restraint systems using connectors that were attached to the child restraint by webbing material, were not reinforced the way that a child restraint would have to be to meet Standard 213's dynamic test requirements. Thus, the flexible latchplate child restraints, and others, had an unrealistic weight advantage compared to other child restraints.

Moreover, the rigid bar anchorage systems (R, L and S) were not optimized. In fact, they were penalized by being heavier than they would likely be if actually put into production. A child restraint manufacturer could compensate for the heavy base mechanism used to attach the rigid connectors to the Century child restraint by reducing the weight of the child restraint. Since no effort was made to take advantage of opportunities for compensatory weight reduction, the child restraint equipped with rigid connectors designed to be attached to rigid vehicle anchorages was unrealistically bulky and heavy. A more realistic comparison would have been to use a Britax child restraint system for the rigid bar anchorage option. The child restraint that Britax has designed weighs 17 lb. Britax optimizes the weight of its child restraint by removing bulk and weight to compensate for the weight of the base. (NHTSA understands that European manufacturers are currently developing child restraints with rigid attachment for the rigid bar anchorage system that will weigh even less than the current Britax restraint system.) Also, the Century child restraint used in the clinic was reported at the clinic as being priced approximately the same as a Britax seat would be, even though the Century seat did not have many of the features of a Britax seat that

participants might have thought would make the restraint ''worth the cost.''

The Preferences for a Rigid Bar System in the Vehicle Cannot Be Added Together

A number of parties commenting on the results of the clinic stated that NHTSA should add the proportions of participants who expressed preferences for three different child restraint attachment systems designed to be used with rigid 6 mm round bars. This, these commenters believed, would show that more participants preferred a round bar system over the flexible latchplate system. Chrysler disagreed that the proportions could be added, but still believed that the rigid bar anchorage system is superior to the flexible latchplate system. Ford said that it may not be statistically valid to add the preferences expressed for the round bar system, but believes ''it is directionally right'' to do so.

NHTSA does not believe that the proportions can be added. It is not known how much a participant's choice was based on a preference for the connecting mechanism. Thus, it cannot be assumed that if they had been offered only the flexible latchplate system and only one of the rigid bar system variants, participants would have chosen in the same proportion (39/48).

Preference for UCRA System Could Be Influenced by a Familiarity With the Hardware; Familiarity Should Not Be a Factor Because It Can Be Compensated for Simply by Time

The higher scores for Overall Suitability and Value For Money for the flexible latchplate system (System M) reflects that fewer participants gave system M low scores in these areas than for the other systems. Scores were closer for specific questions, although system M consistently scored highest or next highest. These preferences and low scores may reflect familiarity with something similar to existing systems (buckle-based systems) or unfamiliarity with a new system (latching on to a bar). The effect of cost on the evaluations is interesting, too. Despite similar costs for systems M, R and S, knowledge of system costs affected preferences disproportionately.

Issued on February 23, 1999.

Ricardo Martinez,

Administrator.

[FR Doc. 99–5053 Filed 3–1–99; 9:16 am]

BILLING CODE 4910–59–P