4–6–99
Vol. 64 No. 65
Pages 16601–16796

federal register

Tuesday
April 6, 1999

Briefings on how to use the Federal Register
For information on briefings in Washington, DC, see announcement on the inside cover of this issue.

The **FEDERAL REGISTER** is published daily, Monday through Friday, except official holidays, by the Office of the Federal Register, National Archives and Records Administration, Washington, DC 20408, under the Federal Register Act (44 U.S.C. Ch. 15) and the regulations of the Administrative Committee of the Federal Register (1 CFR Ch. I). The Superintendent of Documents, U.S. Government Printing Office, Washington, DC 20402 is the exclusive distributor of the official edition.

The **Federal Register** provides a uniform system for making available to the public regulations and legal notices issued by Federal agencies. These include Presidential proclamations and Executive Orders, Federal agency documents having general applicability and legal effect, documents required to be published by act of Congress, and other Federal agency documents of public interest.

Documents are on file for public inspection in the Office of the Federal Register the day before they are published, unless the issuing agency requests earlier filing. For a list of documents currently on file for public inspection, see http://www.nara.gov/fedreg.

The seal of the National Archives and Records Administration authenticates the Federal Register as the official serial publication established under the Federal Register Act. Under 44 U.S.C. 1507, the contents of the **Federal Register** shall be judicially noticed.

The **Federal Register** is published in paper and on 24x microfiche. It is also available online at no charge as one of the databases on GPO Access, a service of the U.S. Government Printing Office.

The online edition of the **Federal Register** is issued under the authority of the Administrative Committee of the Federal Register as the official legal equivalent of the paper and microfiche editions (44 U.S.C. 4101 and 1 CFR 5.10). It is updated by 6 a.m. each day the **Federal Register** is published and it includes both text and graphics from Volume 59, Number 1 (January 2, 1994) forward.

GPO Access users can choose to retrieve online **Federal Register** documents as TEXT (ASCII text, graphics omitted), PDF (Adobe Portable Document Format, including full text and all graphics), or SUMMARY (abbreviated text) files. Users should carefully check retrieved material to ensure that documents were properly downloaded.

On the World Wide Web, connect to the **Federal Register** at http://www.access.gpo.gov/nara. Those without World Wide Web access can also connect with a local WAIS client, by Telnet to swais.access.gpo.gov, or by dialing (202) 512-1661 with a computer and modem. When using Telnet or modem, type swais, then log in as guest with no password.

For more information about GPO Access, contact the GPO Access User Support Team by E-mail at gpoaccess@gpo.gov; by fax at (202) 512–1262; or call (202) 512–1530 or 1–888–293–6498 (toll free) between 7 a.m. and 5 p.m. Eastern time, Monday–Friday, except Federal holidays.

The annual subscription price for the **Federal Register** paper edition is $555, or $607 for a combined **Federal Register,** Federal Register Index and List of CFR Sections Affected (LSA) subscription; the microfiche edition of the **Federal Register** including the Federal Register Index and LSA is $220. Six month subscriptions are available for one-half the annual rate. The charge for individual copies in paper form is $8.00 for each issue, or $8.00 for each group of pages as actually bound; or $1.50 for each issue in microfiche form. All prices include regular domestic postage and handling. International customers please add 25% for foreign handling. Remit check or money order, made payable to the Superintendent of Documents, or charge to your GPO Deposit Account, VISA, MasterCard or Discover. Mail to: New Orders, Superintendent of Documents, P.O. Box 371954, Pittsburgh, PA 15250–7954.

There are no restrictions on the republication of material appearing in the **Federal Register.**

How To Cite This Publication: Use the volume number and the page number. Example: 64 FR 12345.

SUBSCRIPTIONS AND COPIES

PUBLIC	
Subscriptions:	
Paper or fiche	**202–512–1800**
Assistance with public subscriptions	**512–1806**
General online information	**202–512–1530; 1–888–293–6498**
Single copies/back copies:	
Paper or fiche	**512–1800**
Assistance with public single copies	**512–1803**
FEDERAL AGENCIES	
Subscriptions:	
Paper or fiche	**523–5243**
Assistance with Federal agency subscriptions	**523–5243**

FEDERAL REGISTER WORKSHOP

THE FEDERAL REGISTER: WHAT IT IS AND HOW TO USE IT

FOR: Any person who uses the Federal Register and Code of Federal Regulations.

WHO: Sponsored by the Office of the Federal Register.

WHAT: Free public briefings (approximately 3 hours) to present:

1. The regulatory process, with a focus on the Federal Register system and the public's role in the development regulations.
2. The relationship between the Federal Register and Code of Federal Regulations.
3. The important elements of typical Federal Register documents.
4. An introduction to the finding aids of the FR/CFR system.

WHY: To provide the public with access to information necessary to research Federal agency regulations which directly affect them. There will be no discussion of specific agency regulations.

WASHINGTON, DC

WHEN: April 20, 1999 at 9:00 am.

WHERE: Office of the Federal Register
Conference Room
800 North Capitol Street, NW.
Washington, DC
(3 blocks north of Union Station Metro)

RESERVATIONS: 202–523–4538

Printed on recycled paper.

Contents

Federal Register

Vol. 64, No. 65

Tuesday, April 6, 1999

Agency for International Development
RULES
Acquisition regulations:
Miscellaneous amendments, 16647–16649

Agriculture Department
See Animal and Plant Health Inspection Service
See Forest Service
See National Agricultural Statistics Service
See Rural Utilities Service

Air Force Department
NOTICES
Meetings:
Scientific Advisory Board, 16715

Animal and Plant Health Inspection Service
PROPOSED RULES
Exportation and importation of animals and animal products:
Horses from Morocco; change in disease status, 16655–16656

Census Bureau
NOTICES
Agency information collection activities:
Proposed collection; comment request, 16695

Centers for Disease Control and Prevention
NOTICES
Grants and cooperative agreements; availability, etc.:
Oral disease prevention and oral health promotion; infrastructure development initiatives, 16738–16740
Meetings:
Energy-Related Epidemiologic Research Advisory Committee, 16740–16741
Lung cancer among workers exposed to external ionizing radiation, 16741
Vaccine information materials:
Hepatitis B, Haemophilus influenzae type b (Hib), varicella (Chickenpox), and measles, mumps, rubella (MMR) vaccines
Correction, 16741–16742

Civil Rights Commission
NOTICES
Meetings; Sunshine Act, 16694

Coast Guard
RULES
Drawbridge operations:
Dulac Bayou, LA, 16641
Ports and waterways safety:
Bergen County United Way Fireworks, NY; safety zone, 16642–16643
Ward Cove, Tongass Narrows, AK; safety zone, 16641–16642

Commerce Department
See Census Bureau
See Export Administration Bureau
See Foreign-Trade Zones Board
See International Trade Administration
See National Oceanic and Atmospheric Administration
See Patent and Trademark Office
RULES
Acquisition regulations:
Agency protest procedures, 16651–16654
NOTICES
Agency information collection activities:
Submission for OMB review; comment request, 16694–16695

Consumer Product Safety Commission
NOTICES
Agency information collection activities:
Proposed collection; comment request, 16710–16711
Flamable Fabrics Act:
Polyurethane foam in upholstered furniture; labeling rule petition, 16711

Customs Service
RULES
Export control:
Used motor vehicles; exportation requirements, 16635–16640
NOTICES
Uruguay Round Agreements Act (URAA):
Foreign entities violating textile transshipment rules; list, 16781–16783

Defense Department
See Air Force Department
NOTICES
Agency information collection activities:
Submission for OMB review; comment request, 16711–16712
Travel per diem rates, civilian personnel; changes, 16712–16715

Education Department
NOTICES
Grants and cooperative agreements; availability, etc.:
Elementary and secondary education—
Native Hawaiian curriculum development, teacher training and recruitment program, 16715–16716
Native Hawaiian curriculum development; training and recruitment program, 16716–16718
Native Hawaiian family-based eduation centers program, 16718–16720

Employment and Training Administration
NOTICES
Adjustment assistance:
American Smelting and Refinery Co., 16755
Amoco Exploration and Production and Amoco Shared Services, 16755
Boeing Co., 16755–16756
Capco, Inc., et al., 16756–16757
Equity Oil Co., 16757
Hudson ICS, 16757
Motorola Ceramic Products, 16757
National Oilwell, 16757
Texaco Exploration and Producing, Inc., 16757

Adjustment assistance and NAFTA transitional adjustment assistance:
Tube City, Inc., et al., 16752–16755
NAFTA transitional adjustment assistance:
V.F. Jeanwear et al., 16757–16759

Energy Department
See Energy Information Administration
See Federal Energy Regulatory Commission
RULES
Acquisition regulations:
Performance guarantees, 16649–16651
NOTICES
Atomic energy agreements; subsequent arrangements, 16720
Environmental statements; availability, etc.:
Mixed oxide fuel; surplus plutonium disposition supplement, 16720–16721
Meetings:
Biological and Environmental Research Advisory Committee, 16721–16722
Environment Management Site-Specific Advisory Board—Idaho National Engineering and Environmental Laboratory, ID, 16722–16723

Energy Information Administration
NOTICES
Agency information collection activities:
Proposed collection; comment request, 16723–16725
Meetings:
American Statistical Association Committee on Energy Statistics, 16726

Environmental Protection Agency
RULES
Hazardous waste:
Identification and listing—Exclusions, 16643–16647
PROPOSED RULES
Air quality implementation plans; approval and promulgation; various States:
Missouri, 16659–16661
NOTICES
Superfund; response and remedial actions, proposed settlements, etc.:
Conus Chemical So., 16732
Superfund program:
Prospective purchaser agreements—Container Recycling Site, KS, 16732

Executive Office of the President
See Trade Representative, Office of United States

Export Administration Bureau
NOTICES
Agency information collection activities:
Proposed collection; comment request, 16695–16696
Meetings:
Materials Technical Advisory Committee, 16696–16697

Farm Credit Administration
RULES
Farm credit system:
Organization and disclosure to shareholders—Bank director compensation limits, 16617–16618
NOTICES
Meetings; Sunshine Act, 16732–16733

Federal Aviation Administration
RULES
Airworthiness directives:
AlliedSignal Inc., 16621–16624
Avions Pierre Robin, 16624–16625
Boeing, 16625–16635
PROPOSED RULES
Airworthiness directives:
McDonnell Douglas, 16656–16658
NOTICES
Exemption petitions; summary and disposition, 16774–16775
Meetings:
Commercial Space Transportation Advisory Committee, 16775
Research, Engineering and Development Advisory Committee, 16775–16776
Passenger facility charges; applications, etc.:
Chicago O'Hare International Airport, IL, 16776
Cleveland Hopkins International Airport and Burke Lakefront Airport, OH, 16776–16777
University of Illinois-Willard Airport, IL, 16777–16778

Federal Communications Commission
PROPOSED RULES
Common carrier services:
Satellite communications—Mobile and portable earth stations in 1610-1660.5 MHz band; emissions limits, 16687–16689
Practice and procedure:
Regulatory fees (1999 FY); assessment and collection, 16661–16687
NOTICES
Meetings:
North American Numbering Council, 16733

Federal Emergency Management Agency
NOTICES
Agency information collection activities:
Proposed collection; comment request, 16733–16735
Submission for OMB review; comment request, 16735–16737
Meetings:
Technical Mapping Advisory Council, 16737

Federal Energy Regulatory Commission
NOTICES
Hydroelectric applications, 16729–16730
Meetings:
Capacity benefit margin in computing; available transmission capacity; technical conference, 16730–16732
Applications, hearings, determinations, etc.:
Bangor Hydro Electric Co., 16726
Boundary Gas, Inc., 16726–16727
Great Lakes Gas Transmission L.P., 16727
Kansas Pipeline Co., 16727–16728
Mid Louisiana Gas Co., 16728
Northern Border Pipeline Co., 16728–16729

Federal Housing Finance Board
RULES
Federal home loan bank system:
Eligible collateral for FHL bank advances, clarification and verification, 16618–16621
Mandatory excess capital stock redemption; prohibition of fee payment in lieu of stock redemption, 16787–16791

PROPOSED RULES
Federal home loan bank system:
Mandatory excess capital stock redemption; prohibited stock dividends, 16792–16795

Federal Maritime Commission
NOTICES
Freight forwarder licenses:
Palmetto Freight Forwarding Corp., 16737

Federal Railroad Administration
NOTICES
Meetings:
Railroad Safety Advisory Committee, 16778

Federal Reserve System
RULES
Consumer leasing (Regulation M):
Lease advertisements, multiple-item leases; renegotiations and extensions and estimates of official fees and taxes; disclosure guidance, 16612–16614
Truth in lending (Regulation Z):
Calculation of payment schedules involving private mortgage insurance, etc., 16614–16617
NOTICES
Banks and bank holding companies:
Formations, acquisitions, and mergers, 16737
Permissible nonbanking activities, 16738

Federal Transit Administration
NOTICES
Environmental statements; notice of intent:
Cincinnati/Northern Kentucky Region; light rail transit project, 16778–16780

Financial Management Service
See Fiscal Service

Fiscal Service
NOTICES
Surety companies acceptable on Federal bonds:
Allied Mutual Surety Company, 16783
Columbia Mutual Insurance Company, 16783–16784
Michigan Mutual Insurance Company, 16784
Nova Casualty Co., 16784

Fish and Wildlife Service
NOTICES
Endangered and threatened species:
Incidental take permits—
Florida scrubjay and eastern indigo snake, 16745–16747

Food and Drug Administration
NOTICES
Food additive petitions:
Arakawa Chemical Industries, Ltd., 16742
Proctor & Gamble Co., 16742–16743
Food for human consumption:
Indentity standards deviation; market testing permits—
Kraft Foods, Inc.; grated parmesan cheese, 16743
GRAS or prior sanctioned ingredients:
Flax Council of Canada, 16743
Reports and guidance documents; availability, etc.:
Public health issues posed by use of nonhuman primate xenografts in humans; industry guidance, 16743–16744

Foreign-Trade Zones Board
NOTICES
Applications, hearings, determinations, etc.:
Pennsylvania
Sandvik Saws & Tools, Inc.; wharehousing and distribution facility, 16697

Forest Service
NOTICES
Meetings:
Southwest Oregon Province Interagency Executive Advisory Committee, 16693

Health and Human Services Department
See Centers for Disease Control and Prevention
See Food and Drug Administration

Housing and Urban Development Department
NOTICES
Agency information collection activities:
Submission for OMB review; comment request, 16744–16745

Immigration and Naturalization Service
NOTICES
Citizen attestation employment eligibility pilot program; guidance, 16751–16752

Interior Department
See Fish and Wildlife Service
See Land Management Bureau

Internal Revenue Service
RULES
Procedure and administration:
Unified partnership audit procedures; modifications and additions, 16640
NOTICES
Agency information collection activities:
Proposed collection; comment request, 16784–16786
Inflation adjustment factor and reference prices:
Nonconventional source fuel credit, 16786

International Trade Administration
NOTICES
Antidumping:
Brass sheet and strip from—
Germany, 16697–16699
Hot-rolled lead and bismuth carbon steel products from—
Germany, 16703–16707
United Kingdom, 16699–16703
Industrial nitrocellulose from—
United Kingdom, 16707

Judicial Conference of the United States
NOTICES
Meetings:
Judicial Conference Advisory Committee on—
Appellate Procedure Rules, 16748
Bankruptcy Procedure Rules, 16749
Civil Procedure Rules, 16748
Criminal Procedure Rules, 16748–16749
Evidence Rules, 16748
Practice and Procedure Rules, 16748–16749

Justice Department
See Immigration and Naturalization Service

NOTICES
Pollution control; consent judgments:
A.G. Miller Co., Inc., et al., 16749
American Board Companies, Inc., C.I. Liquidators of New York, Inc., and Great American Industries, Inc., 16749–16750
American Home Products Corp. et al., 16750
Ben Shemper & Sons, Inc., et al., 16750
Berks Associates, Inc., et al., 16751
Commercial Auto Body, et al., 16751

Labor Department
See Employment and Training Administration
See Mine Safety and Health Administration
See Occupational Safety and Health Administration

Land Management Bureau
NOTICES
Meetings:
California Desert District Advisory Council, 16747
Resource advisory councils—
Northeast California, 16747
National Petroleum Reserve:
Alaska; additions, 16747–16748

Mine Safety and Health Administration
NOTICES
Safety standard petitions:
International Uranium Corp., et al., 16759–16761

National Agricultural Statistics Service
NOTICES
Committees; establishment, renewal, termination, etc.:
Agricultural Statistics Advisory Committee, 16693–16694

National Highway Traffic Safety Administration
PROPOSED RULES
Civil monetary penalties; inflation adjustment, 16690–16692

National Oceanic and Atmospheric Administration
RULES
Fishery conservation and management:
Alaska; fisheries of Exclusive Economic Zone—
Gulf of Alaska shallow-water species; direct fishing prohibition by vessels using trawl gear, 16654
NOTICES
Meetings:
North Pacific Fishery Management Council, 16707–16708
Western Pacific Fishery Management Council, 16708–16709

Nuclear Regulatory Commission
NOTICES
Agency information collection activities:
Submission for OMB review; comment request, 16763–16764
Environmental statements; availability, etc.:
Public Service Electric & Gas Co., 16764–16765
Meetings:
Reactor Safeguards Advisory Committee, 16765
Applications, hearings, determinations, etc.:
Molycorp, Inc., 16764

Occupational Safety and Health Administration
NOTICES
Grants and cooperative agreements; availability, etc.:
Susan Harwood training program, 16761–16763

Office of United States Trade Representative
See Trade Representative, Office of United States

Patent and Trademark Office
NOTICES
Agency information collection activities:
Proposed collection; comment request, 16709–16710

Personnel Management Office
RULES
Group life insurance, Federal employees:
Court orders, 16601–16602

Postal Service
NOTICES
Privacy Act:
Systems of records, 16765–16766

Public Debt Bureau
See Fiscal Service

Public Health Service
See Centers for Disease Control and Prevention
See Food and Drug Administration

Rural Utilities Service
RULES
Telecommunications system construction policies and procedures:
Telecommunications borrowers preloan and postloan requirements; reduction of RUS oversight with respect to preparation of plans and specifications, etc., 16602–16612

Securities and Exchange Commission
NOTICES
Agency information collection activities:
Proposed collection; comment request, 16766–16767
Self-regulatory organizations; proposed rule changes:
Chicago Board Options Exchange, Inc., 16771
National Securities Clearing Corp., 16772
Options Clearing Corp., 16772–16773
Applications, hearings, determinations, etc.:
Aquinas Funds, Inc., et al., 16767–16769
Brantley Capital Corp., 16769–16771

Statistical Reporting Service
See National Agricultural Statistics Service

Surface Transportation Board
NOTICES
Railroad operation, acquisition, construction, etc.:
Union Pacific Railroad Co., 16780

Trade Representative, Office of United States
NOTICES
Meetings:
Trade Policy and Negotiations Advisory Committee, 16773

Transportation Department
See Coast Guard
See Federal Aviation Administration
See Federal Railroad Administration
See Federal Transit Administration
See National Highway Traffic Safety Administration
See Surface Transportation Board
NOTICES
Aviation proceedings:
Agreements filed; weekly receipts, 16774

Treasury Department
See Customs Service
See Fiscal Service
See Internal Revenue Service
NOTICES
Reports and guidance documents; availability, etc.:
Capital Budgeting Study Commission, 16780–16781

Separate Parts In This Issue

Part II
Federal Housing Finance Board, 16787–16795

Reader Aids
Consult the Reader Aids section at the end of this issue for phone numbers, online resources, finding aids, reminders, and notice of recently enacted public laws.

CFR PARTS AFFECTED IN THIS ISSUE

A cumulative list of the parts affected this month can be found in the Reader Aids section at the end of this issue.

5 CFR
870.....16601

7 CFR
1753.....16602

9 CFR
Proposed Rules:
93.....16655

12 CFR
213.....16612
226.....16614
611.....16617
620.....16617
935 (2 documents) 16618, 16788
Proposed Rules:
933.....16792
934.....16792
935.....16792

14 CFR
39 (3 documents) 16621, 16624, 16625
Proposed Rules:
39.....16656

19 CFR
178.....16635
192.....16635

26 CFR
301.....16640

33 CFR
117.....16641
165 (2 documents) 16641, 16642

40 CFR
261.....16643
Proposed Rules:
52.....16659
70.....16659

47 CFR
Proposed Rules:
1.....16661
2.....16687
25.....16687

48 CFR
701.....16647
703.....16647
715.....16647
731.....16647
752.....16647
909.....16649
970.....16649
1333.....16651

49 CFR
Proposed Rules:
578.....16690

50 CFR
679.....16654

Rules and Regulations

Federal Register
Vol. 64, No. 65
Tuesday, April 6, 1999

This section of the FEDERAL REGISTER contains regulatory documents having general applicability and legal effect, most of which are keyed to and codified in the Code of Federal Regulations, which is published under 50 titles pursuant to 44 U.S.C. 1510.

The Code of Federal Regulations is sold by the Superintendent of Documents. Prices of new books are listed in the first FEDERAL REGISTER issue of each week.

OFFICE OF PERSONNEL MANAGEMENT

5 CFR Part 870

RIN 3206–AI49

Federal Employees' Group Life Insurance Program: Court Orders

AGENCY: Office of Personnel Management.

ACTION: Interim rule with request for comments.

SUMMARY: The Office of Personnel Management (OPM) is issuing interim regulations to implement a new law, which was enacted July 22, 1998. This law requires that provisions of a court decree of divorce, annulment, or legal separation, or the terms of a court order or court-approved property settlement agreement relating to such a court decree be followed instead of the otherwise existing statutory order of precedence for payment of benefits under the Federal Employees' Group Life Insurance Program.

DATES: Interim rules are effective May 6, 1999. Comments must be received on or before June 7, 1999.

ADDRESSES: Send written comments to Abby L. Block, Chief, Insurance Policy and Information Division, Office of Insurance Programs, Retirement and Insurance Service, Office of Personnel Management, PO Box 57, Washington, DC 20044; or deliver to OPM, Room 3425, 1900 E Street, NW, Washington, DC; or FAX to (202) 606–0633.

FOR FURTHER INFORMATION CONTACT: Karen Leibach, (202) 606–0004.

SUPPLEMENTARY INFORMATION: The Federal Employees' Group Life Insurance (FEGLI) law sets an order of precedence for payment of benefits following the death of an insured employee, annuitant, or compensationer (5 U.S.C. 8705). First in the order of precedence is a designated beneficiary. There has been no statutory limitation on changing designations.

When a divorce decree requires an individual insured under FEGLI to name his/her children or former spouse as the beneficiary, it is possible the individual may not comply or may comply and then change the designation at a later date. This action, while potentially in violation of the court order, did not violate the FEGLI law.

Pub. L. 105–205, 112 Stat. 683, enacted July 22, 1998, requires benefits to be paid in accordance with the terms of a court decree of divorce, annulment, or legal separation, or the terms of any court order or court-approved property settlement agreement relating to a court decree of divorce, annulment, or legal separation, regardless of whether or not the insured individual actually completes a designation complying with the court order, if the court order is received in the appropriate office before the death of the insured individual. To the extent provided in the court order, the court order supersedes any prior designation by the insured individual. Pub. L. 105–205 also prohibits an insured individual from changing his/her designation, unless the person(s) named in the court order agrees or unless the court order is subsequently modified by the court that originally issued it.

These regulations define the types of court orders that the law applies to and state that the statutory order of precedence will not be applicable if such a court order has been received in the appropriate office on or after the date of enactment of the legislation and prior to the death of the insured. The appropriate office for active employees is their employing agency; the appropriate office for separated employees (annuitants) is OPM. For a compensationer, during the first 12 months of nonpay status the appropriate office is their employing agency; after separation or the completion of 12 months in nonpay status, the appropriate office is OPM. To avoid the possibility of a fraudulent submission, we are requiring that certified copies of the court orders be submitted.

In the event of conflicting court orders, the Office of Federal Employees' Group Life Insurance (OFEGLI) will pay benefits based on whichever court order has the earliest date of execution and meets the requirement of having been received by the appropriate office on or after the date of enactment and before the death of the insured. (A domestic relations court order from one court does not automatically have the effect of modifying an existing domestic relations court order from another court.)

Pub. L. 105–205 also allows a court order to direct the insured to make an irrevocable assignment to the person(s) named in the court order. However, until the insured individual properly completes an assignment form, the assignment does not occur.

These regulations also correct an error to § 870.506(e)(2) to state that eligible employees who return to Federal service after a break in service of 180 days or more receive whatever Optional insurance coverage they had before separation, if they do not submit a Life Insurance Election specifically electing or waiving Optional insurance.

Waiver of General Notice of Proposed Rulemaking

Under section 553 (b)(3)(B) and (d)(3) of title 5, United States Code, I find that good cause exists for waiving the general notice of proposed rulemaking. These regulations implement Pub. L. 105–205, which became effective July 22, 1998.

Regulatory Flexibility Act

I certify that this regulation will not have a significant economic impact on a substantial number of small entities because the regulation will only affect life insurance benefits of Federal employees and retirees.

Executive Order 12866, Regulatory Review

This rule has been reviewed by the Office of Management and Budget in accordance with Executive Order 12866.

List of Subjects in 5 CFR Part 870

Administrative practice and procedure, Government employees, Hostages, Iraq, Kuwait, Lebanon, Life insurance, Retirement.

U.S. Office of Personnel Management.

Janice R. Lachance,

Director.

Accordingly, OPM is amending 5 CFR part 870 as follows:

PART 870—FEDERAL EMPLOYEES' GROUP LIFE INSURANCE PROGRAM

1. The authority citation for part 870 is revised to read as follows:

Authority: 5 U.S.C. 8716; subpart J also issued under sec. 599C of Pub. L. 101–513, 104 Stat. 2064, as amended; § 870.302 also issued under sections 11202(f), 11232(e), and 11246(b) and (c) of Pub. L. 105–33, 111 Stat. 251; §§ 870.101, 870.801, 870.802, and 870.901 also issued under Pub. L. 105–205, 112 Stat. 683.

2. In § 870.101, the definition *Court order* is added in alphabetical *order* to read as follows:

§ 870.101 Definitions.

* * * * *

Court order means any court decree of divorce, annulment, or legal separation, or the terms of any court order or court-approved property settlement agreement relating to any court decree of divorce, annulment, or legal separation, the terms of which require FEGLI benefits to be paid to a specific person or persons.

* * * * *

3. In § 870.506, the third sentence of paragraph (e)(2) is revised to read as follows:

§ 870.506 Optional insurance: cancelling a waiver.

* * * * *

(e) * * *

(2) * * * If the employee doesn't file a Life Insurance Election, in a manner designated by OPM, within the 31-day period, the employee gets whatever Optional insurance coverage he/she had immediately before separating from Federal service and is considered to have waived any other Optional insurance. * * *

* * * * *

4. In § 870.801, paragraph (a), introductory text, is revised, paragraphs (d) and (e) are redesignated as paragraphs (e) and (f), and a new paragraph (d) is added to read as follows:

§ 870.801 Order of precedence and payment of benefits.

(a) Except as provided in paragraph (d) of this section, benefits are paid according to the order of precedence stated in 5 U.S.C. 8705(a), as follows:

* * * * *

(d)(1) If there is a court order in effect naming a specific person or persons to receive life insurance benefits upon the death of an insured individual, Basic insurance and Option A and Option B insurance will be paid to the person or persons named in the court order, instead of according to the order of precedence.

(2) To qualify a person for such payment, a certified copy of the court order must be received by the appropriate office on or after July 22, 1998, and before the death of the insured.

(3)(i) For employees, the appropriate office is their employing agency.

(ii) For annuitants, the appropriate office is OPM.

(iii) For compensationers during the first 12 months of nonpay status, the appropriate office is their employing agency.

(iv) For compensationers after separation or the completion of 12 months in nonpay status, the appropriate office is OPM.

(4) If, within the applicable time frames, the appropriate office receives conflicting court orders entitling different persons to the same insurance, benefits will be paid based on whichever court order was issued first.

* * * * *

5. In § 870.802, the first sentence of paragraph (a) is revised, and a new paragraph (i) is added to read as follows:

§ 870.802 Designation of beneficiary.

(a) Except as provided in paragraph (i) of this section, if an insured individual wants benefits paid differently from the order of precedence, he/she must file a designation of beneficiary. * * *

* * * * *

(i) (1) Except as provided in paragraph (i)(2) of this section, if a court order has been received in accordance with § 870.801(d), an insured individual cannot designate a different beneficiary, unless

(i) The person(s) named in the court order gives written consent for the change, or

(ii) The court order is modified.

(2) If a court order has been received in accordance with § 870.801(d), and the court order applies to only part of the insurance benefits, an insured individual can designate a different beneficiary to receive the insurance benefits that are not included under the court order. If the insured individual does not make a designation for these benefits and there is no previous valid designation on file, benefits will be paid according to the order of precedence shown in § 870.801(a).

(3) If a court order received in accordance with § 870.801(d) is subsequently modified without naming a new person to receive the benefits, and a certified copy of the modified court order is received by the appropriate office before the death of the insured, the insured individual can designate a beneficiary. Benefits will be paid according to the order of precedence shown in § 870.801(d) if the insured individual does not complete a new designation of beneficiary.

6. In § 870.901, paragraph (i) is added to read as follows:

§ 870.901 Assignments permitted

* * * * *

(i) A court order can direct that an insured individual make an irrevocable assignment to the person(s) named in the court order. For an assignment to be effective, the insured individual must follow the procedures in § 870.902.

[FR Doc. 99–8279 Filed 4–5–99; 8:45 am]

BILLING CODE 6325–01–P

DEPARTMENT OF AGRICULTURE

Rural Utilities Service

7 CFR Part 1753

RIN 0572–AB34

Telecommunications System Construction Policies and Procedures

AGENCY: Rural Utilities Service, USDA.

ACTION: Final rule.

SUMMARY: The Rural Utilities Service (RUS) hereby amends its regulations on telecommunications system construction policies and procedures. This revision includes empowering the telecommunications borrowers by reducing oversight by RUS with respect to preparation of plans and specifications, bid approvals, and final document approvals. In addition to reducing the requirements for facilities construction, RUS will also make technical corrections and clarifications, and minor technical changes.

EFFECTIVE DATE: This regulation is effective on May 6, 1999.

FOR FURTHER INFORMATION CONTACT: Orren E. Cameron III, Director, Telecommunications Standards Division, Rural Utilities Service, U.S. Department of Agriculture, 1400 Independence Avenue, SW, STOP 1598, Washington, DC 20250–1598. Telephone: (202) 720–8660; e-mail: ecameron@rus.usda.gov.

SUPPLEMENTARY INFORMATION:

Executive Order 12866

This final rule has been determined to be not significant for purposes of Executive Order 12866 and therefore has not been reviewed by the Office of Management and Budget.

Executive Order 12988

This final rule has been reviewed under Executive Order 12988, Civil

Justice Reform. RUS has determined that this final rule meets the applicable standards provided in Section 3. of the Executive Order. In addition, all State and local laws and regulations that are in conflict with this rule will be preempted, no retroactive effect will be given to this rule, and, in accordance with § 212(e) of the Department of Agriculture Reorganization Act of 1994 (7 U.S.C. 6912(e)), administrative appeal procedures, if any, must be exhausted before an action against the Department or its agencies may be initiated.

Regulatory Flexibility Act Certification

The Administrator of RUS has determined that this final rule will not have a significant economic impact on a substantial number of small entities, as defined in the Regulatory Flexibility Act (5 U.S.C. 601 *et seq.*). The RUS telecommunications program provides loans to borrowers at interest rates and terms that are more favorable than those generally available from the private sector. RUS borrowers, as a result of obtaining federal financing, receive economic benefits which exceed any direct economic costs associated with complying with RUS regulations and requirements. Moreover, this action liberalizes certain contract requirements by changing contract limits thereby reducing RUS oversight requirements and further offsetting economic costs. Therefore an analysis under the Regulatory Flexibility act is not required.

Information Collection and Recordkeeping Requirements

The Office of Management and Budget (OMB) approval of the information collection requirements of this rule under the Paperwork Reduction Act of 1995 (44 U.S.C. Chapter 35, as amended), OMB control number 0572–0059, has expired. In the preamble of its Notice of Proposed Rulemaking on Telecommunications System Construction Policies and Procedures, published July 17, 1998, (63 FR 38503), RUS included a statement regarding the collection of information in this rule and provided an opportunity for public comment. RUS will publish a Notice in the **Federal Register** upon receipt of OMB approval of the collection of information. No person is required to respond to the collection of information required by this rule until such Notice is published.

National Environmental Policy Act Certification

The Administrator of RUS has determined that this final rule will not significantly affect the quality of the human environment as defined by the National Environmental Policy Act of 1969 (42 U.S.C. 4321 *et seq.*). Therefore, this action does not require an environmental impact statement of assessment.

Catalog of Federal Domestic Assistance

The program described by this final rule is listed in the Catalog of Federal Domestic Assistance Programs under No. 10.851, Rural Telephone Loans and Loan Guarantees, and No. 10.852, Rural Telephone Bank Loans. This catalog is available on a subscription basis from the Superintendent of Documents, United States Government Printing Office, Washington, DC 20402–9325.

Executive Order 12372

This final rule is excluded from the scope of Executive Order 12372, Intergovernmental Consultation, which may require consultation with State and local officials. See notice related to a final rule entitled ''Department Programs and Activities Excluded from Executive Order 12372,'' (50 FR 47034) which published re-determined that RUS loans, loan guarantees, and RTB bank loans were exempted from coverage under this order.

Unfunded Mandates

This rule contains no Federal Mandates (under the regulatory provision of Title II of the Unfunded Mandates Reform Act of 1995) for State, local, and tribal governments or the private sector. Thus, this rule is not subject to the requirements of section 202 and 205 of the Unfunded Mandates Reform Act.

Background

RUS has undertaken a strategic review of all policies and procedures covering its preloan and postloan requirements of borrowers. This review was part of RUS efforts in governmental streamlining and empowering the recipients of the loans provided under the Rural Electrification Act (RE Act) of 1936, (7 U.S.C. 901 *et seq.*). As a result of this review, several procedures and policies were deemed no longer necessary. Other policies and procedures have been streamlined and RUS will place more responsibility with the borrowers to insure a more cost effective review process while maintaining the required loan security. In view of this increased reliance upon borrowers and their consultants, certain provisions have been added to reduce the government's vulnerability to conflicts of interest. Provisions have also been added for construction of headquarters facilities pursuant to the Rural Electrification Loan Restructuring Act of 1993 (107 Stat. 1356).

RUS is also making technical corrections to final regulations which were reorganized and redesignated on September 27, 1990, at 55 FR 39393. In particular, certain regulations contained cross references which inadvertently had not been updated. This action is simply a correction to these regulations with no change to substance. Changes to regulatory text are merely to update cross references. As currently published, the final regulations may prove to be misleading.

Comments

Public comments were received from Hicks and Ragland Engineering Company, Harry Hutson, and Century Telephone Enterprises. The comments, recommendations, and responses are summarized as follows:

Comment: In regard to § 1753.7(e) one commenter questioned whether new bids had to be taken on a project or changes with the awarded bidder could be negotiated when a substantial change in the plans and specifications (P&S) is required after executed contacts have been obtained.

Response: Changes in the plans and specifications do not require new bids but can be handled by contract amendments as described in § 1753.11.

Comment: One commenter stated that § 1753.2 defines major construction as projects estimated to cost more than $250,000, and minor construction as projects estimated to cost $250,000 or less. Section 1753.46(2) states that contracts under $250,000, may, at the borrower's option, be negotiated. Section 1753.5(2) states that RUS approval is required for negotiated major construction contracts. By definition there is no major construction below $250,000. Therefore, we cannot have a negotiated major construction contract.

Response: Certain RUS contracts such as RUS Forms 525 and 545 for central office equipment may be used for negotiated major construction with RUS approval.

Comment: One commenter stated that § 1753.46 discusses minor construction. Since the limit for minor construction is now $250,000, this information should be in the minor construction section not the major construction section.

Response: RUS believes that a discussion of the use of the RUS Forms 515 and 773 is appropriate in this section. RUS added a sentence to § 1753.77 in this final rule indicating that the rules for using these forms are contained in subpart F.

Comment: One commenter stated that minor construction can be accomplished via work order, RUS Forms 773 or 515. A Form 515 contract under $250,000 can be negotiated except if equal to $250,000, which is almost impossible. To make this more sensible, the borrower should be able to negotiate, at their option, Form 515 contracts costing $250,000 or less.

Response: RUS agrees with this comment and made the change in the appropriate paragraphs.

Comment: One commenter stated that § 1753.7(e) contains the statement ''estimated to cost over $500,000 or 25% of the total loan, whichever is less.'' This statement appears in numerous paragraphs throughout this part 1753 but in these statements ''whichever is less'' does not appear. For clarity, it should be stated each time the statement appears whether you mean it to be less than or more than.

Response: RUS agrees with this comment. The phrase ''whichever is less'' is added in the appropriate paragraphs.

Comment: One commenter stated § 1753.48(b) should be eliminated since you can not negotiate above $250,000.

Response: RUS agrees in part with this comment. The first sentence in § 1753.48(b) raises the negotiation limit to $250,000 and is useful. The second sentence is deleted in this final rule.

Comment: One commenter said there should be no reference in the major construction section to negotiated RUS Form 515 or 773 contracts.

Response: Negotiated RUS Form 515 contracts operate under the same rules as any other Form 515 contract so it is covered in subpart F. RUS Form 773 is only mentioned in subpart F for the reader's convenience. For rules regarding the use of RUS Form 773, the reader is referred by subpart F to subpart I.

Comment: One commenter stated that § 1653.47(c) requires checklist Form 553 be completed and signed by the borrower's engineer and submitted to RUS for review with the plans and specifications. RUS Form 553 is so out of date that the Washington, D.C., staff does not use it or require it. Rus Form 553 should be updated or eliminated.

Response: RUS agrees with this comment and references to Form 553 are deleted in this final rule.

Comment: One commenter stated that there is confusing language in § 1753.48(b) regarding negotiated procurement for RUS Form 515 contract. The first part of the paragraph says bids are not required for outside plant construction which is estimated to cost less than $250,000, but the last part says plans and specifications for proposed contracts exceeding $500,000 must be approved by RUS before negotiations with a contractor may begin.

Response: RUS agrees with this comment. The second sentence in § 1753.48(b) is deleted in this final rule.

List of Subjects in 7 CFR Part 1753

Communications equipment, Loan programs—communications, Reporting and recordkeeping requirements, Rural areas, Telecommunication, Telephone.

For reasons set forth in the preamble, 7 CFR chapter XVII is amended as follows:

PART 1753—TELECOMMUNICATION SYSTEM CONSTRUCTION POLICIES AND PROCEDURES

1. The authority citation for part 1753 is revised to read as follows:

Authority: 5 U.S.C. 501, 7 U.S.C. 901 *et seq.*

2. Revised § 1753.1, paragraph (a) to read as follows:

§ 1753.1 General.

(a) The standard RUS Telecommunications Loan Documents contain provisions regarding procurement of materials and equipment and construction of telecommunications facilities by telecommunications borrowers. This part implements certain of the provisions by setting forth requirements and procedures. Borrowers shall follow these requirements and procedures whenever using loan funds to purchase materials and equipment or perform construction, unless they have received the Administrator's written approval to do otherwise.

* * * * *

3. Amend § 1753.2 to add a new definitions for ''loan purposes,'' ''RUS,'' and ''RTB,'' and revise the definitions of ''major construction'', ''minor construction'' and ''modernization plan'' to read as follows:

§ 1753.2 Definitions.

* * * * *

Loan purposes—The high level objectives of the loan are to fund the construction. These purposes are first stated in the characteristics letter described in 7 CFR 1737.80, which is sent to the applicant to offer a loan after RUS has completed its preloan studies.

Major construction—A telecommunications plant project estimated to cost more than $250,000, including all labor and materials.

Minor construction—A telecommunications plant project estimated to cost $250,000 or less, including all labor and materials.

* * * * *

Modernization plan—A State plan, which has been approved by RUS, for improving the telecommunications network of those Telecommunications Providers covered by the plan. A Modernization Plan must conform to the provisions of 7 CFR part 1751, subpart B.

* * * * *

RTB—the Rural Telephone Bank, established as a body corporate and an instrumentality of the United States, to obtain supplemental funds from non-Federal sources and utilize them in making loans, for the purposes of financing, or refinancing, the construction, improvement, expansion, acquisition, and operation of telephone lines, facilities, or systems, for RUS borrowers financed under sections 201 and 408 of the Act.

RUS—the Rural Utilities Service, an agency of the United States Department of Agriculture established pursuant to Section 232 of the Federal Crop Insurance and Reform and Department of Agriculture Reorganization Act of 1994 (Pub. L. 103–354, 108 Stat. 3178), successor to Rural Electrification Administration with respect to administering certain electric and telecommunications program. See 7 CFR 1700.1.

* * * * *

4. Revise the first word of § 1753.3(a) from ''Prior'' to ''Advance.''

5. Amend § 1753.5, to revise paragraph (b)(1), redesignate paragraph (b)(2) to (b)(3), and add a new paragraph (b)(2) to read as follows:

§ 1753.5 Methods of major construction.

* * * * *

(b) *Contract construction*. (1) RUS approval of the borrower's award of the contract is not required if the contractor is selected through sealed competitive bidding, the bid amount is $500,000 or less and the contractor is not a company or organization affiliated with the borrower. This does not relieve the borrower of the requirements of bidding or bid evaluation set contained in this part.

(2) RUS approval of the borrower's award of the contract is required for all other competitively-bid and for negotiated major construction contracts.

* * * * *

6. Amend § 1753.6, to revise paragraph (a) and add paragraph (e) to read as follows:

§ 1753.6 Standards, specifications, and general requirements.

(a) Materials, equipment, and construction financed with loan funds must meet the standards and specifications established by RUS. 7 CFR part 1755 lists the RUS Bulletins containing the standards and specifications for telephone facilities. Materials and equipment meeting these standards are included on the List of Material Acceptable for Use on Telecommunications Systems of RUS Borrowers, I.P. 300–4. This bulletin may be obtained by subscription from the Superintendent of Documents, Government Printing Office, Washington, DC 20402.

* * * * *

(e) All software, software systems, and firmware financed with loan funds must be year 2000 compliant, as defined in 7 CFR 1732.22(e).

7. Amend § 1753.7, to revise paragraphs (c) and (e) to read as follows:

§ 1753.7 Plans and specifications (P&S).

* * * * *

(c) The appropriate standards and specifications listed in 7 CFR part 1755 shall be included in the P&S. When RUS has not prepared standards and specifications, the borrower shall use general engineering requirements and specifications prepared by the borrower's engineer. The specifications prepared by the borrower's engineer and based on general engineering requirements shall be subject to review and approval by RUS for all major construction, including major projects which would be exempted from RUS approval under paragraph (e) of this section.

* * * * *

(e) RUS approval of P&S is required for construction that is estimated to cost over $500,000 or 25% of the total loan, whichever is less, and for all building construction. P&S for all other construction are exempt from RUS review and approval except that, at the time of contract approval, RUS will examine the plans and specifications for conformity with the loan purposes and to determine that they comply with other requirements of this part.

* * * * *

8. Amend § 1753.8, to revise paragraphs (a)(1), (a)(11)(i), (a)(11)(ii) introductory text, (a)(11)(iii) introductory text, and (a)(12)(i), and add a new paragraph (a)(11)(iv) is added to read as follows:

§ 1753.8 Contract construction procedures.

(a) Sealed, competitive bidding—(1) *Bid opening date:* The borrower is responsible for scheduling the bid opening date. If RUS review of P&S is required by § 1753.7, the borrower shall wait until approval has been received before setting the date. In setting the date, sufficient time should be allowed for the bidders to examine the project site and prepare their bids. The borrower shall notify GFR of the bid date and invite GFR to attend.

* * * * *

(11) *Award of contract:* (i) The borrower shall obtain from the engineer the determination of the lowest responsive bid, a tabulation of all bids and the engineer's recommendation for award of the contract. Contract award is subject to RUS approval if either the cost of the project is over $500,000 or the contract is with an organization affiliated with the borrower. Contract award of all other projects is not subject to RUS approval.

(ii) If an award is made, the borrower shall award the contract to the lowest responsive bidder. The borrower may award the contract immediately upon determination of the lowest responsive bidder if the following conditions are met:

* * * * *

(iii) If RUS approval of the award of contract is required under this paragraph (a)(11), the borrower shall send to RUS for consideration of approval of the award:

* * * * *

(iv) If RUS approval of the award of contract is not required under this paragraph (a)(11), the borrower shall keep a file available for inspection by RUS. The file shall be kept for at least two years and shall include:

(A) One copy of all received bids.

(B) The engineer's recommendation and tabulation of all bids including ''Buy American'' evaluations, if any, and all other evaluations required by law.

(C) Evidence of acceptance of the low bid by the borrower, such as a copy of the board resolution certified by the Secretary of the board.

(12) *Execution of contract:* (i) The borrower shall submit to RUS three original counterparts of the contract executed by the contractor and borrower.

* * * * *

9. Revise § 1753.11, paragraphs (a)(3), (b) and (d) to read as follows:

§ 1753.11 Contract amendments.

(a) * * *

(3) The amendment causes an unbonded contract to require a contractor's performance bond. This would occur when a contract that is executed in an amount below that requiring a performance bond by 7 CFR part 1788, subpart C, is amended to an amount above that amount.

(b) Advance RUS approval to execute other contract amendments is not required. These amendments may be submitted to RUS at any time prior to closeout. If a borrower wishes to receive an advance of funds based on an amended contract amount (i.e., amendments that increase a contract by less than 20%), the borrower may initiate an increase in the amount approved for advance by submitting three copies of the amendment to RUS for approval.

* * * * *

(d) Upon execution of any amendment that causes the amended contract amount to exceed the original contract amount by 20% or more, three copies of the amendment shall be submitted to RUS for approval.

10. Amend § 1753.15, to redesignate paragraphs (a)(2) through (a)(5) as (a)(3) through (a)(6), add a new paragraph (a)(2), and revise paragraphs (a)(1) and newly designated paragraphs (a)(5)(i) and (ii) to read as follows:

§ 1753.15 General.

(a)(1) The standard RUS loan documents contain provisions regarding engineering and architectural services performed by or for RUS telecommunications borrowers. This part implements certain of the provisions by setting forth the requirements and procedures to be followed by borrowers in selecting architects and engineers and obtaining architectural and engineering services by contract or by force account.

(2) Borrowers shall obtain architectural and engineering services only from persons or firms which are not affiliated with, and have not represented, a contractor, vendor or manufacturer who may provide labor, materials, or equipment to the borrower under any current loan.

* * * * *

(5)(i) For major construction, services provided by architects and engineers not on the borrower's staff must be provided under Form 220, Architectural Service Contract, or Form 217, Postloan Engineering Service Contract—Telecommunications. These contracts require RUS approval.

(ii) For minor construction, borrowers may use the contracts in paragraph (a)(5)(i) of this section for postloan architectural or engineering services or any other form of contract, such as Form 245, Engineering Service Contract, Special Services—Telephone. RUS

approval of contracts for postloan architectural or engineering services associated with minor construction, except for buildings covered in paragraph (a)(6) of this section, is not required.

* * * * *

11. Amend § 1753.16, to revise paragraphs (b)(1) through (b)(4) to read as follows:

§ 1753.16 Architectural services.

* * * * *

(b)(1) The borrower shall use Form 220 when contracting for architectural services for major construction, except that the borrower may use either Form 220 or Form 217 if the building is an unattended central office building.

(2) The borrower and the architect negotiate the fees for services under Form 220.

(3) Reasonable modifications or additions to the terms and provisions in Form 220 may be made, subject to RUS approval, to obtain the specific services needed for a building.

(4)(i) Three copies of Form 220, executed by the borrower and the architect, shall be sent to GFR to be forwarded to RUS for approval. RUS will review the contract terms and conditions. RUS will not approve the contract if, in RUS's judgment:

(A) Unacceptable modifications have been made to the contract form.

(B) The contract will not accomplish loan purposes.

(C) The architectural service fees are unreasonable.

(D) The contract presents unacceptable loan security risk to RUS.

(ii) If RUS approves the contract, RUS will send one copy to the architect and one copy to the borrower.

* * * * *

12. Amend § 1753.17(b)(1)(ii)(D) to remove ''(See 7 CFR part 1758)'', add paragraph (b)(1)(ii)(E), and revise paragraphs (c)(1)(i)(C) and (c)(2)(i)(A) to read as follows:

§ 1753.17 Engineering services.

* * * * *

(b) * * *

(1) * * *

(ii) * * *

(E) The consulting engineering firm is affiliated with or has represented a contractor, vendor, or manufacturer who may provide labor, materials, or equipment to the borrower under any current loan.

* * * * *

(c) * * *

(1) * * *

(i) * * *

(C) The names, qualifications, and responsibilities of other principal employees who will be associated with providing the engineering services.

* * * * *

(2) * * *

(i) * * *

(A) A copy of the employee's qualifications and experience record, unless previously submitted. RUS requires a minimum of four years of construction and inspection experience. The employee cannot be engaged in the actual construction.

* * * * *

13. Add § 1753.18 to read as follows:

§ 1753.18 Engineer and architect contract closeout certifications.

A certification of completion and inspection of construction signed by the borrower and countersigned in accordance with accepted professional engineering and architectural practice, by the engineer or architect, shall be prepared as evidence of completion of a major construction project. This certification shall make reference to the contract number and contract amount, and shall include the following:

(a) A statement that the construction is complete and was done in accordance with the RUS approved system design or layout or subsequent RUS approved changes.

(b) A statement that the construction was for loan purposes.

(c) A statement that construction used RUS-accepted materials and was in accordance with specifications published by RUS covering the construction which were in effect when the contract was executed, or in the absence of such specifications, that it meets other applicable specifications and standards (specify), and that it meets all applicable national and local code requirements as to strength and safety.

(d) A statement that the construction complies with the ''Buy American'' provision (7 U.S.C. 903 note) of the Rural Electrification Act of 1936 (7 U.S.C. 901 *et seq.*).

(e) A statement that all necessary approvals have been obtained from regulatory bodies and other entities with jurisdiction over the project.

(f) A statement that all closeout documents required by this part have been examined and found complete such that the Contractor has fulfilled all obligations under the contract except for warranty coverage.

(g) A statement that the engineer or architect is not affiliated with and does not represent the contractor, vendor, or manufacturer who is a participant in the contract.

14. Revise § 1753.25, paragraphs (a), (c), and (d) as follows:

§ 1753.25 General.

(a) This subpart implements and explains the provisions of the Loan Documents setting forth the requirements and the procedures to be followed by borrowers in constructing headquarters, commercial office, central office, warehouse, and garage buildings with loan funds.

* * * * *

(c) All plans and specifications for buildings to be constructed with loan funds are subject to the approval of RUS. In addition, preliminary plans and specifications for headquarters and commercial office buildings to be constructed with loan funds are subject to RUS approval.

(d) RUS Form 257, Contract to Construct Buildings, shall be used for the construction of all headquarters, commercial office, central office, warehouse, and garage buildings with loan funds. Refer to § 1753.26 for further instructions.

* * * * *

15. Amend § 1753.26, to redesignate paragraphs (a) through (d) and (b) through (e) respectively, revise redesignated paragraph (b)(1) and add a new paragraph (a) to read as follows:

§ 1753.26 Plans and specifications (P&S).

(a) For headquarters and commercial office buildings only, the borrower shall prepare preliminary P&S showing the floor plan and general architectural details of the building to be constructed using loan funds. In particular, the preliminary P&S shall address the requirements of § 1753.25(f) and the Uniform Relocation Assistance and Real Property Acquisition Policies Act of 1970 (42 U.S.C. 4601 *et seq.*). The P&S shall be submitted to the GFR and are subject to RUS approval.

(b) * * *

(1) RUS Contract Form 257, Contract to Construct Buildings, completed to the extent explained in (c) of this section.

* * * * *

16. Revise § 1753.30, paragraphs (b), (c)(2), and (c)(3) to read as follows:

§ 1753.30 Closeout procedures.

* * * * *

(b) *RUS Form 257 Contract.* (1) Whenever changes were made in the plans and specifications which did not require immediate submission to RUS of an amendment under § 1753.11, a final contract amendment showing the changes shall be prepared.

(2) Upon completion of the project, the borrower shall obtain certifications from the architect or engineer that the project and all required documentation are satisfactory and complete. The

requirements for this certification are contained in § 1753.18.

(3) The engineer's or architect's contract closeout certification and the final amendment shall be submitted to RUS as a basis for the final advance of funds for the contract.

(4) After all required RUS approvals are obtained, final payment is made in accordance with article III of RUS Form 257 once the borrower has received the architect's or engineer's certifications regarding satisfactory completion of the project.

(c) * * *

(2) Complete, with the assistance of its architect or engineer, the documents listed in the following table that are required for the closeout of force account construction.

DOCUMENTS REQUIRED TO CLOSEOUT CONSTRUCTION OF BUILDINGS

RUS Form No.	Description	Use with		No. of copies prepared by		Distribution	
		Contract	Force account	Contractor	Architect/engineer	Borrower	Contractor
238	Construction or Equipment Contract Amendment (if not previously submitted, send to RUS for approval).	X			(3)	(to RUS)	(to RUS)
181	Certificate of Completion (contract construction) [1].	X			2	1	1
231	Certificate of Contractor	X		1		1	
224	Waiver and Release of Lien From Each Supplier.	X		1		1	
213	Certificate (buy American)	X		1		1	
None [2]	"As Built" Plans and Specifications.	X	X		1	1	
None	Guarantees, Warranties, Bonds, Operating or Maintenance Instructions, etc.	X		1		1	
None	Architect/Engineer seismic safety certification.	X	X		2	1	1

[1] Cost of materials and services furnished by borrower are not to be included in Total Cost on RUS Form 181.
[2] When only minor changes were made during construction, two copies of a statement to that effect from the Architect will be accepted instead of the "as built" Plans and Specifications.

(3) Make distribution of the completed documents as indicated in the table in this section.

* * * * *

17. Revise § 1753.36, paragraph (g) to read as follows:

§ 1753.36 General.

* * * * *

(g) Materials and equipment must meet the standards and general specifications approved by RUS. Materials and equipment included in I.P. 300–4, "List of Materials Acceptable for Use on Telecommunications Systems of RUS Borrowers", have been accepted as meeting these requirements. If the equipment is not included in the "List of Materials" but has been approved for field trial installation, the borrower must in each instance obtain field trial approval from RUS prior to entering into any agreement with a supplier.

* * * * *

18. Revise § 1753.37, paragraph (c) to read as follows:

§ 1753.37 Plans and specifications (P&S).

* * * * *

(C) RUS review of P&S is required for construction estimated to cost over $500,000 total or estimated to cost more than 25% of the total loan, whichever is less.

(1) If RUS review is required, the borrower shall submit one copy of the P&S to the GFR for RUS review.

(2) RUS will review the P&S and notify the borrower in writing of approval or disapproval.

19. Revise § 1753.38, paragraphs (a)(1)(i), (a)(1)(v), (a)(2)(i), (a)(2)(v), (b)(1), (b)(3), (b)(5), (e)(2), and (e)(3) to read as follows:

§ 1753.38 Procurement procedures.

(a) * * *

(1) *Solicitation of bids.* (i) After RUS approval of the specifications and equipment requirements (required only for projects expected to exceed $500,000 or 25% of the loan, whichever is less), the borrower shall send "Notice and Instructions to Bidders" to suppliers with central office equipment included in the current Informational Publication (I.P.) 300–4, "List of Materials Acceptable for Use on Telecommunications Systems of RUS Borrowers." I.P. 300–4 is a subscription item available from the Superintendent of Documents, U.S. Government Printing Office, P.O. Box 371954, Pittsburgh, PA 15250–7954. This "Notice" may also be sent to suppliers of non-domestic equipment currently accepted by RUS as meeting RUS technical standards. The "Notice" may also be sent to suppliers of central office equipment accepted for field trial.

* * * * *

(v) At the request of an invited supplier, the borrower shall provide two copies of the P&S.

(2) *Technical sessions.* (i) The borrower shall schedule individual technical sessions by the suppliers, notify each supplier of its scheduled date and time, notify the GFR of all scheduled dates and times, and request the following be available at the technical session:

* * * * *

(v) After evaluation of the technical proposals and RUS approval of the changes to P&S (required only for projects that are expected to exceed $500,000 or 25% of the loan, whichever is less), sealed bids shall be solicited from only those bidders whose technical proposals meet P&S requirements. When fewer than three bidders are adjudged qualified by the borrower to bid, RUS approval must be obtained to proceed. Generally, RUS will grant such approval only if the borrower can demonstrate to the satisfaction of RUS that a good faith effort was made to obtain at least three competitive bids. This would be demonstrated if all suppliers currently listed in I.P. 300–4

were invited to submit technical proposals.

* * * * *

(b) * * *

(1) After RUS approval of the P&S and equipment requirements (required only for contracts expected to exceed $500,000 or 25% of the loan, whichever is less), the borrower shall send two complete copies of the approved P&S to the supplier an request that a proposal be submitted.

* * * * *

(3) If the contract is expected to exceed $500,000 or 25% of the loan, whichever is less, changes in the P&S resulting from the technical session shall be subject to RUS review and approval.

* * * * *

(5) The borrower shall obtain an award recommendation from its engineer.

* * * * *

(e) * * *

(2) The borrower shall prepare a plan containing an outline of the proposed use of the equipment, the proposal from the supplier and an estimate of the installation cost. If the total cost exceeds $500,000, RUS approval of the award of contract is required. The borrower shall in this case submit its plan and the supplier's proposal to GFR. If the cost does not exceed $500,000, the borrower's award of contract is not subject to RUS approval.

(3) If RUS approval was required by paragraph (e)(2) of this section, upon RUS approval the purchase may be made using RUS Contract Form 525, or 545, or when applicable, the procedures contained in subpart I of this part.

* * * * *

(20) Amend § 1753.39 to revise paragraphs (a), (e)(1), (3)(2), (f) introductory text, (f)(1)(ii)(A), (f)(1)(iii), (f)(1)(iv) and (g), delete paragraph (e)(3), and add paragraph (h) to read as follows:

§ 1753.39 Closeout documents.

* * * * *

(a) *Contract amendments.* Amendments that must be submitted to RUS for approval, as required by § 1753.11, shall be submitted promptly. All other amendments may be submitted to RUS with the engineer's contract closeout certification.

* * * * *

(e) * * *

(1) Obtain from the engineer a certification of partial closeout.

(2) Submit one copy of the summary to RUS with an FRS.

(f) Final contract closeout procedure. The documents required for the final closeout of the central office equipment contract, RUS Contract Forms 525 and 545, are listed in the following table, which also indicates the number of copies and their distribution. The procedure to be followed is as follows:

DOCUMENTS REQUIRED TO CLOSEOUT CENTRAL OFFICE EQUIPMENT CONTRACT

RUS Form No.	Description	Use with		Prepared by		Distribution	
		RUS Form 525	RUS Form 545	Contractor	Engineer	Borrower	Contractor
238	Construction or Equipment Contract Amendment (if not previously submitted, send to RUS for approval).	X	X	.....	(3)	(to RUS)	(to RUS)
754	Certificate of Completion and Certificate of Contractor and Indemnity Agreement (if submitted, Form 744 is not required).	X	.....	3	3	2	1
517	Results of Acceptance Tests (prepare and distribute copies immediately upon completion of the acceptance tests of each central office).	X	.....	.....	2	1	1
752a	Certificate of Completion—Not Including Installation.	.....	X	.....	2	1	1
224	Waiver and Release of Lien (from each supplier).	X	.....	1	.....	1	.....
231	Certificate of Contractor	X	.....	1	.....	1	.....
213	Certificate (Buy American)	X	X	1	.....	1	.....
None	Switching Diagram, as installed	X	X	2	.....	2	.....
None	Set of Drawings (each set to include all the drawings required under the Specification, RUS Form 522).	X	X	2	.....	2	.....

(1) * * *

(ii) * * *

(A) Prepare and assemble the documents listed in the table in this section, Documents Required to Close Out Central Office Equipment Contracts.

* * * * *

(iii) Make the documents listed in the table available for GFR review on the date of final inspection.

(iv) Distribute the documents as indicated in the table. The documents listed for RUS shall be retained by the borrower for inspection by RUS for at least two years from the date of the engineer's contract closeout certificate.

* * * * *

(g) Once RUS approval has been obtained for any required amendments, the borrower shall obtain certifications from the engineer that the project and all required documentation are satisfactory and complete. The requirements for the final contract certification are contained in § 1753.18.

(h) Once these certifications have been received, final payment shall be made according to the payment terms of the contract. Copies of the certifications shall be submitted with the FRS, requesting the remaining funds on the contract.

21. Revise § 1753.46, pararaphs (c)(2) and (c)(3) to read as follows:

§ 1753.46 General.

* * * * *

(c) * * *

(2) Contract Form 515, which is for $250,000 or less, may, at the borrower's option, be negotiated. See § 1753.48(b).

(3) RUS Form 773 may be used for minor outside plant projects which are not competitively bid because they cannot be designed and staked at the

time of contract execution. Projects of this nature include routine line extensions and placement of subscriber drops. See subpart I of this part.

22. Revise § 1753.47, paragraph (c) to read as follows:

§ 1753.47 Plans and specifications (P&S).

* * * * *

(c) *Submission of plans and specifications to RUS.* (1) If the project does not exceed $500,000 or 25% of the loan, whichever is less, the borrower shall furnish GFR one set of P&S. The borrower may then proceed with procurement in accordance with § 1753.48.

(2) If the project exceeds $500,000 or 25% of the loan, whichever is less, RUS approval of P&S is required. Two sets of P&S shall be furnished to GFR. RUS will return one set to the borrower upon notice of approval. The borrower may then proceed with procurement in accordance with § 1753.48.

23. Revise § 1753.48, paragraphs (a)(4) and (b)(1) to read as follows:

§ 1753.48 Procurement procedures.

(a) * * *

(4) *Bid openings.* (i) Bid openings and award of the contract shall be conducted in accordance with §§ 1753.5(b)(1) and 1753.8(a).

(ii) If § 1753.8 requires RUS approval of award of the bid, the borrower shall submit to RUS two copies of the assembly unit sections of the apparent lowest responsive bid accepted by the borrower.

(b) *Negotiated procurement.* (1) Competitive bids are not required for outside plant construction that is estimated to cost $250,000, or less, inclusive of labor and materials.

* * * * *

24. Revise § 1753.49, paragraphs (b), (c)(2) and (c)(3) to read as follows:

§ 1753.49 Closeout documents.

* * * * *

(b) *Documents required.* The following table lists the documents required to closeout the RUS contract Form 515.

DOCUMENTS REQUIRED TO CLOSEOUT CONSTRUCTION CONTRACT

[RUS Form 515]

RUS Form No.	Description	No. of copies prepared by		Distribution	
		Contractor	Engineer	Borrower	Contractor
724	Final Inventory—Certificate of Completion		2	1	1
724a	Final Inventory—Assembly Units		2	1	1
None	Contractor's Bond Extension (send to RUS when required)	(3)		(to RUS)	(to RUS)
281	Tabulation of Materials Furnished by Borrower	2		1	1
213	Certificate—"Buy American"	1		1	
None	Listing of Construction Change Orders		1	1	
224	Waiver and Release of Lien (from each supplier)	1		1	
231	Certificate of Contractor	1		1	
527	Final Statement of Construction		2	1	1
None	Reports on Results of Acceptance Tests		1	1	1
None	Set of Final Staking Sheets		1	1	
None	Tabulation of Staking Sheets		1	1	
None	Correction Summary (legible copy)		1	1	
None	Treated Forest Products Inspection Reports or Certificates of Compliance (prepared by inspection company or supplier).			1	
None	Final Key Map (when applicable)		1	1	
None	Final Central Office Area and Town Maps		1	1	

(c) * * *

(2) *Final inventory documents.* (i) The borrower shall obtain certifications from the engineer that the project and all required documentation are satisfactory and complete. Requirements for these contract closeout certifications are contained in § 1753.18.

(ii) The borrower shall prepare and distribute the final inventory documents in accordance with the tables contained in this section. The documents listed for RUS shall be retained by the borrower for inspection by RUS for at least two years from the date of the engineer's contract closeout certification.

STEP-BY-STEP PROCEDURE FOR CLOSEOUT OF CONSTRUCTION CONTRACT

[RUS Form 515]

Sequence		By	Procedure
Step No.	When		
1	Upon Completion of Construction	Borrower's Engineer.	Prepares the following: a set of Detail Maps and a set (when applicable) of Key Maps which show in red the work done under the 515 contract; a Tabulation of Staking Sheet; and a tentative Final Inventory, RUS Forms 724 and 724a.
2	After acceptance tests made	Borrower's Engineer.	Forwards letter to the borrower with copies to the GFR stating that the project is ready for final inspection. Schedules inspection date.
3	Upon receipt of letter from Borrower's Engineer.	GFR	Advises borrower whether attending the final inspection will be possible.

STEP-BY-STEP PROCEDURE FOR CLOSEOUT OF CONSTRUCTION CONTRACT—Continued

[RUS Form 515]

Sequence		By	Procedure
Step No.	When		
4	By inspection date	Borrower's Engineer.	Obtains and makes available the following documents: a set of ''as constructed'' detail maps and (when applicable) ''as built'' key maps; a list of construction change orders; the final staking sheets; the tabulation staking sheets; the treated forest products inspection reports or certificates of compliance; the tentative final inventory, RUS Forms 724 and 724a; the tentative tabulation, RUS Form 231 (if borrower furnished part of material); and, a report of results of acceptance tests.
5	During inspection	Borrower's Engineer.	Issues instructions to contractor covering corrections to be made in construction as a result of inspection.
6	During inspection	Contractor	Corrects construction on basis of instructions from the borrower's engineer. The corrections should proceed closely behind the inspection in order that the borrower's engineer can check the corrections before leaving the system.
7	During inspection	Borrower's Engineer.	Inspects and approves corrected construction. Marks inspected areas on the key map, if available, otherwise on the detail maps.
8	Upon completion of inspection	Borrower's Engineer.	Prepares or obtains all the closeout documents listed in Table 3.
9	After signing final inventory	Borrower	Prepares and submits to RUS the engineer's certifications of completion and a Financial Requirement Statement, RUS Form 481, requesting amount necessary to make final payment due under contract.
10	On receipt of final advance	Borrower	Promptly forwards check for final payment to contractor.
11	During subsequent loan fund audit review following final payment.	RUS Field Accountant.	Examines borrower's construction records for compliance with the construction contract and Subpart F, and examines RUS Form 281 (Tabulation of Materials Furnished by Borrower) if any, for appropriate costs.

(iii) When the total inventory price exceeds the maximum contract by more than 20 percent, an extension to the contractor's bond is required.

(iv) The borrower shall submit the engineer's contract closeout certification with FRS for the final advance of funds.

(3) Final payment shall be made according to the payment provisions of article III of RUS Form 515, except that certificates and other documents required to be submitted to or approved by the Administrator shall be submitted to and approved by the Owner.

§ 1753.50 [Removed and Reserved]

25. Section 1753.50 is removed and reserved.

26. Revise § 1753.58, paragraphs (b), (c)(2) and (c)(5) to read as follows:

§ 1753.58 Closeout documents.

* * * * *

(b) *Documents.* The documents required to close the FAP are listed in the following table. The following is a brief description of the closeout documents:

DOCUMENTS REQUIRED TO CLOSE OUT FORCE ACCOUNT OUTSIDE PLANT CONSTRUCTION

RUS Form No.	Description
817, 817a, 817b	Final Inventory Force Account Construction and Certificate of Engineer. Submit one copy to RUS, if required [1]
213	Certificate—''Buy American'' (as applicable from each supplier).
None	Detail Maps.
None	Key map, if applicable.
None	Staking Sheets.
None	Tabulation of staking sheets.
None	Treated Forest Products Inspection Reports or Certificates of Compliance (prepared by inspection company or supplier).

[1] RUS Forms 817, 817a, and 817b are to be submitted to GFR only if required in paragraph (c)(5) of this section. Otherwise, the final inventory documents are to be assembed and retained by the borrower for at least two years.

(c) * * *

(2) The GFR shall be invited to make the final inspection accompanied by the engineer and the borrower.

* * * * *

(5) After inspection, the final inventory documents shall be assembled as indicated in the table in this section. RUS Forms 817, 817a, and 817b are to be submitted to GFR only if the amount of the closeout exceeds the original force account proposal by 20% or more. Otherwise, the final inventory documents are to be assembed and retained by the borrower for at least two years.

* * * * *

27. Revise § 1753.68, paragraphs (b)(2)(i), (b)(2)(ii), (b)(2)(iii), (b)(2)(iv), (b)(2)(v), (b)(4)(i), (b)(4)(ii), (c)(2), and (d)(3) to read as follows:

§ 1753.68 Purchasing special equipment.

* * * * *

(b) * * *

(2) *Initial equipment purchase.* (i) The borrower prepares P&S and, for projects estimated to exceed $500,000 or 25% of the loan, whichever is less, sends two copies to GFR for approval.

(ii) For projects estimated to exceed $500,000 or 25% of the loan, whichever is less, RUS will either approve P&S in writing or notify the borrower of the reasons for withholding approval.

(iii) For projects estimated to cost less than $500,000 or 25% of the loan, whichever is less, the borrower may proceed with procurement upon completion of the P&S.

(iv) If the borrower has employed full competitive bidding in the selection, a contract may be executed with the successful bidder and the borrower may proceed to paragraph (b)(2)(vi) of this section.

(v) If the borrower did not follow a fully competitive bidding process as described in § 1753.8, the selection, along with a summary of all proposals and an engineer's recommendation, shall be sent to RUS. RUS shall approve the proposal selection in writing or notify the borrower of any reason for withholding approval.

* * * * *

(4) *New system additions.* (i) The borrower prepares the P&S and, if the project is estimated to exceed $500,000 or 25% of the loan, whichever is less, sends two copies to the GFR for approval. The borrower may request RUS approval to negotiate for the purpose of standardization on a system basis prior to preparing the P&S.

(ii) RUS notifies the borrower in writing as to whether the borrower may negotiate for specific equipment. If P&S were required to be submitted to RUS under paragraph (b)(4)(i) of this section, RUS notifies the borrower in writing of P&S approval (or notifies the borrower of the reasons for withholding approval).

* * * * *

(c) * * *

(2) The borrower shall prepare any required amendments to the special equipment contract, arrange for the execution by all parties, and submit these amendments to RUS in accordance with § 1753.11(d). RUS Form 238, Construction or Equipment Contract Amendment, shall be used for this purpose.

* * * * *

(d) * * *

(3) *Closeout documents.* When the acceptance tests have been completed and all deficiencies have been corrected, the borrower:

(i) Assembles and distributes the documents listed in the following table that are required for the closeout of the special equipment contract. The documents listed for RUS shall be retained by the borrower for inspection by RUS for at least two years from the date of the engineer's contract closeout certification.

DOCUMENTS REQUIRED TO CLOSE OUT SPECIAL EQUIPMENT CONTRACTS

[RUS Forms 397 and 398]

RUS Form No.	Description	No. of copies prepared by			Engineer	Distribution	
		Form 397	Form 398	Contractor		Borrower	Contractor
238	Construction or Equipment Contract Amendment (if not previously submitted, send to RUS for approval).	.....	(3)	.....	(3)	(to RUS)	(to RUS)
396	Certificate of Completion—Special Equipment Contract (Including Installation).	.....	2	.....	.....	1	1
396a	Certificate of Completion—Special Equipment Contract (Not Including Installation).	.....	.....	.....	2	1	1
744	Certificate of Contractor and Indemnity Agreement.	1	.....	.....	.....	1	.....
213	Certificate (Buy American)	1	.....	1	.....	1	.....
None	Report in writing, including all measurements and other information required under Part II of the applicable specifications.	1	.....	.....	1	1	.....
None	Set of maintenance recommendations for all equipment furnished under the contract.	1	.....	1	.....	1	.....

(ii) Obtains certifications from the engineer that the project and all required documentation are satisfactory and complete. Requirements for this contract closeout certification are contained in § 1753.18.

(iii) Submits copies of the engineer's certifications to RUS with the FRS requesting the remaining funds on the contract.

(iv) Makes final payment in accordance with the payment terms of the contract.

28. Revise § 1753.76, paragraph (a) is revised to read as follows:

§ 1753.76 General.

(a) This subpart implements and explains the provisions of the Loan Documents containing the requirements and procedures to be followed by borrowers for minor construction of telecommunications facilities using RUS

loan funds. Terms used in this subpart are defined in § 1753.2.

* * * * *

29. Revise § 1753.77 to read as follows:

§ 1753.77 Methods of minor construction.

Minor construction may be performed by contract using RUS Contract Form 773, ''Miscellaneous Construction Work and Maintenance Services'', by RUS Contract Form 515, or by work order construction. The rules for using Form 515 for minor construction are contained in subpart F of this part.

30. Revise § 1753.80, paragraph (b) to read as follows:

§ 1753.80 Minor construction procedure.

* * * * *

(b) RUS financing under Form 773 contracts dated in the same calendar year is limited to the following amounts for the following discrete categories of minor construction. The date of the Form 773 contract is the date the Form 773 contract is executed.

(1) For outside plant construction, the limit is $500,000 or ten per cent (10%) of the borrower's previous calendar year's outside plant total construction, whichever is greater.

(2) For central office equipment, the limit is $500,000.

(3) For special equipment and buildings, the limit is $250,000 in each category.

* * * * *

Appendices A–F Removed

31. Remove Appendices A through F to part 1753.

Dated: March 31, 1999.

Inga Smulkstys,

Deputy Under Secretary, Rural Development.

[FR Doc. 99–8380 Filed 4–5–99; 8:45 am]

BILLING CODE 3410–15–M

FEDERAL RESERVE SYSTEM

12 CFR Part 213

[Regulation M; Docket No. R–1028]

Consumer Leasing

AGENCY: Board of Governors of the Federal Reserve System.

ACTION: Final rule; official staff interpretation.

SUMMARY: The Board is publishing revisions to the official staff commentary to Regulation M, which implements the Consumer Leasing Act. The commentary applies and interprets the requirements of the regulation. The update provides guidance on disclosures for lease renegotiations and extensions, official fees and taxes, multiple-item leases, and advertisements.

DATES: This rule is effective March 31, 1999. Compliance is optional until March 31, 2000.

FOR FURTHER INFORMATION CONTACT: Kyung Cho-Miller or Obrea Poindexter, Staff Attorneys, Division of Consumer and Community Affairs, Board of Governors of the Federal Reserve System, at (202) 452–3667. For users of Telecommunications Device for the Deaf (TDD) *only,* Diane Jenkins at (202) 452–3544.

SUPPLEMENTARY INFORMATION:

I. Background

The Consumer Leasing Act (CLA), 15 U.S.C. 1667–1667e, was enacted in 1976 as an amendment to the Truth in Lending Act (TILA), 15 U.S.C. 1601 *et seq.* The Board's Regulation M (12 CFR part 213) implements the act. The CLA requires lessors to provide consumers with uniform cost and other disclosures about consumer lease transactions. The act generally applies to consumer leases of personal property in which the contractual obligation does not exceed $25,000 and has a term of more than four months. An automobile lease is the most common type of consumer lease covered by the act.

The commentary (12 CFR Part 213 (Supp. I)) is a substitute for individual written staff interpretations; it is updated as necessary, but generally not more frequently than annually, to address significant questions that arise. This is the first update since the January 1, 1998, effective date for complying with the revised regulation. Except as discussed below, the interpretations are adopted as proposed, with some technical edits to address concerns raised by commenters. In response to concerns about the uncertainty of computer readiness for the Year 2000 date change, the effective date for mandatory compliance with the commentary update is March 31, 2000.

In December, the Board published proposed amendments to the commentary to Regulation M (63 FR 67434, December 7, 1998). The Board received comments from leasing industry representatives. Overall, commenters generally supported the proposed amendments, except for the guidance on estimating official fees and taxes.

II. Commentary Revisions

Section 213.3—General Disclosures Requirements

3(d) Use of Estimates

As proposed, the example about estimating official fees and taxes in comment 3(d)(1)–1(i) is removed. A cross reference to the commentary to section 213.4(n), which provides guidance on estimating official fees and taxes, is added to comment 3(d)(1)–2.

Section 213.4—Content of Disclosures

4(c) Payment Schedule and Total Amount of Periodic Payments

Comment 4(c)–1 is revised to clarify that scheduled payments can occur at both regular and irregular intervals. A similar revision is also made in comment 1 to appendix A.

4(f) Payment Calculation

Motor vehicle lease disclosures must include a mathematical progression of how periodic payments are derived. Comment 4(f)–2 is added to address lease transactions that involve multiple items of leased property if one of the items is not a motor vehicle under state law.

4(n) Fees and Taxes

Lessors must disclose the total amount payable by the lessee during the lease term for official and license fees, certificate of title fees, registration, and taxes. Commenters supported the need for guidance about this disclosure but thought proposed comment 4(n)–2 did not provide sufficient flexibility given the difficulty in projecting future fees and taxes on some lease transactions. Fees and taxes may differ widely, state by state and jurisdiction by jurisdiction. In addition, some of the taxes and fees being projected may involve amounts that are billed directly to consumers and not through the lessor. Comment 4(n)–2 is revised to provide guidance and flexibility in determining rates and fees.

Section 213.5—Renegotiations, Extensions, and Assumptions

5(a) Renegotiations

A renegotiation occurs where a lease is satisfied and replaced by a new lease. Under Regulation M, a renegotiation generally triggers new disclosures. Several commenters requested further guidance on how to properly complete model forms where, by renegotiation, the initial lease term is extended and the consummation date remains unchanged from the initial lease. Comment 5(a)–1 is added to clarify that disclosures should conform to the

lessee's legal obligation and to include guidance for using the model forms.

5(b) Extensions

Comment 5(b)–3 is added to provide guidance on lease extensions, which sometimes are consummated before the end of the initial lease term. The comment clarifies that disclosures should be based on the lessee's obligation for the period of the extension, whether the extension agreement is consummated during the initial lease term or afterwards. Any fees required in connection with the extension also must be reflected in the new disclosures, regardless of when the fees are paid.

Section 213.7—Advertising

7(d)(2) Additional Terms

Comment 7(d)(2)–1 is revised to provide guidance for advertising periodic lease payments affected by third-party fees that vary by state or locality, such as taxes or licenses.

Appendix A—Model Forms

Comment 1 to appendix A is revised to provide additional examples of permissible changes to the model forms.

List of Subjects in 12 CFR Part 213

Advertising, Federal Reserve System, Reporting and recordkeeping requirements, Truth in lending.

For the reasons set forth in the preamble, the Board amends 12 CFR Part 213 as follows:

PART 213—CONSUMER LEASING (REGULATION M)

1. The authority citation for part 213 continues to read as follows:

Authority: 15 U.S.C. 1604; 1667f.

2. In Supplement I to Part 213, under *Section 213.3—General Disclosure Requirements,* under *Paragraph 3(d)(1) Standard,* paragraph 1. is amended by removing ''For example:'' from the last line, paragraph 1.i. is removed, and paragraph 2. is amended by adding a new sentence to the end of the paragraph.

The addition reads as follows:

Supplement I To Part 213—Official Staff Commentary To Regulation M

* * * * *

Section 213.3—General Disclosure Requirements

* * * * *

3(d)(1) Standard

* * * * *

2. *Basis of Estimates.* * * * See commentary to § 213.4(n) for estimating official fees and taxes.

* * * * *

3. In Supplement I to Part 213, under *Section 213.4—Content of Disclosures,* the following amendments are made:

a. Under *4(c) Payment Schedule and Total Amount of Periodic Payments,* paragraph 1. is revised;

b. Under *4(f) Payment Calculation,* a new paragraph 2. is added; and

c. Under *4(n) Fees and Taxes,* a new paragraph 2. is added.

The additions and revisions read as follows:

* * * * *

Section 213.4—Content of Disclosures

* * * * *

4(c) Payment Schedule and Total Amount of Periodic Payments

1. *Periodic payments.* The phrase ''number, amount, and due dates or periods of payments'' requires the disclosure of all payments that are made at regular or irregular intervals and generally derived from rent, capitalized or amortized amounts such as depreciation, and other amounts that are collected by the lessor at the same interval(s), including, for example, taxes, maintenance, and insurance charges. Other periodic payments may, but need not, be disclosed under § 213.4(c).

* * * * *

4(f) Payment Calculation

* * * * *

2. *Multiple-items.* If a lease transaction involves multiple items of leased property, one of which is not a motor vehicle under state law, at their option, lessors may include all items in the disclosures required under § 213.4(f). See comment 3(a)–4 regarding disclosure of multiple transactions.

* * * * *

4(n) Fees and Taxes

* * * * *

2. *Estimates.* In disclosing the total amount of fees and taxes under § 213.4(n), lessors may need to base the disclosure on estimated tax rates or amounts and are afforded great flexibility in doing so. Where a rate is applied to the future value of leased property, lessors have flexibility in estimating that value, including, but not limited to, using the mathematical average of the agreed upon value and the residual value or published valuation guides; or a lessor could prepare estimates using the agreed upon value and disclose a reasonable estimate of the total fees and taxes. Lessors may include a statement that the actual total of fees and taxes may be higher or lower depending on the tax rates in effect or the value of the leased property at the time a fee or tax is assessed.

* * * * *

4. In Supplement I to Part 213, under *Section 213.5—Renegotiations, Extensions, and Assumptions,* the following amendments are made:

a. A new undesignated heading, *5(a) Renegotiations,* and paragraph 1. is added; and

b. Under *Paragraph 5(b) Extensions.,* a new paragraph 3. is added.

The additions read as follows:

* * * * *

Section 213.5—Renegotiations, Extensions, and Assumptions

* * * * *

5(a) Renegotiations

1. *Basis of disclosures.* Lessors have flexibility in making disclosures so long as they reflect the legal obligation under the renegotiated lease. For example, assume that a 24-month lease is replaced by a 36-month lease. The initial lease began on January 1, 1998, and was renegotiated and replaced on July 1, 1998, so that the new lease term ends on January 1, 2001.

i. If the renegotiated lease covers the 36-month period beginning January 1, 1998, the new disclosures would reflect all payments made by the lessee on the initial lease and all payments on the renegotiated lease. In this example, since the renegotiated lease covers a 36-month period beginning January 1, 1998, the disclosures must reflect payments made since that date. On the model form, the ''total of base periodic payments'' disclosed under § 213.4(f)(7) should reflect periodic payments to be made over the entire 36-month term. Payments received since January 1, 1998, are added as a new line item disclosed as ''total of payments received'' and are subtracted from the ''total of base periodic payments'' in calculating a new item disclosed as the ''total of base periodic payments remaining.'' For example, if 6 monthly payments of $300 were received since January 1, 1998, the disclosure form should include a ''total of base periodic payments'' line from which $1,800 is subtracted to arrive at the ''total of base periodic payments remaining.'' The remainder of the disclosures would not change.

ii. If the renegotiated lease covers only the remaining 30 months, from July 1, 1998, to January 1, 2001, the disclosures would reflect only the charges incurred in connection with the renegotiation and the payments for the remaining period.

* * * * *

5(b) Extensions

* * * * *

3. *Basis of disclosures.* The disclosures should be based on the extension period, including any upfront costs paid in connection with the extension. For example, assume that initially a lease ends on March 1, 1999. In January 1999, agreement is reached to extend the lease until October 1, 1999. The disclosure would include any extension fee paid in January and the periodic payments for the seven-month extension period beginning in March.

* * * * *

5. In Supplement I to Part 213, under *Section 213.7—Advertising,* under *Paragraph 7(d)(2) Additional Terms.,* paragraph 1. is revised as follows:

* * * * *

Section 213.7—Advertising

* * * * *

7(d)(2) Additional Terms

1. *Third-party fees that vary by state or locality.* The disclosure of a periodic payment or total amount due at lease signing or delivery may:

i. Exclude third-party fees, such as taxes, licenses, and registration fees and disclose that fact; or

ii. Provide a periodic payment or total that includes third-party fees based on a particular state or locality as long as that fact and the fact that fees may vary by state or locality are disclosed.

* * * * *

6. In Supplement I to Part 213, under *Appendix A—Model Forms,* paragraph 1. is revised as follows:

* * * * *

Appendix A—Model Forms

* * * * *

1. *Permissible changes.* Although use of the model forms is not required, lessors using them properly will be deemed to be in compliance with the regulation. Generally, lessors may make certain changes in the format or content of the forms and may delete any disclosures that are inapplicable to a transaction without losing the act's protection from liability. For example, the model form based on monthly periodic payments may be modified for single-payment lease transactions or for quarterly or other regular or irregular periodic payments. The model form may also be modified to reflect that a transaction is an extension. The content, format, and headings for the segregated disclosures must be substantially similar to those contained in the model forms; therefore, any changes should be minimal. The changes to the model forms should not be so extensive as to affect the substance and the clarity of the disclosures.

* * * * *

By order of the Board of Governors of the Federal Reserve System, acting through the Secretary of the Board under delegated authority, March 31, 1999.

Robert deV. Frierson,

Associate Secretary of the Board.

[FR Doc. 99–8412 Filed 4–5–99; 8:45 am]

BILLING CODE 6210–01–P

FEDERAL RESERVE SYSTEM

12 CFR Part 226

[Regulation Z; Docket No. R–1029]

Truth in Lending

AGENCY: Board of Governors of the Federal Reserve System.

ACTION: Final rule; official staff interpretation.

SUMMARY: The Board is publishing revisions to the official staff commentary to Regulation Z (Truth in Lending). The commentary applies and interprets the requirements of the regulation. The update addresses the prohibition against the issuance of unsolicited credit cards. It provides guidance on calculating payment schedules involving private mortgage insurance. In addition, the update discusses credit sale transactions where downpayments include cash and property used as a trade-in, and adopts several technical amendments.

DATES: This rule is effective March 31, 1999. Compliance is optional until March 31, 2000.

FOR FURTHER INFORMATION CONTACT: James H. Mann or Obrea O. Poindexter (open-end credit), or Michael E. Hentrel or Kathleen C. Ryan (closed-end credit), Staff Attorneys; Division of Consumer and Community Affairs, Board of Governors of the Federal Reserve System, at (202) 452–3667 or 452–2412; for users of Telecommunications Device for the Deaf (TDD) *only,* Diane Jenkins at (202) 452–3544.

SUPPLEMENTARY INFORMATION:

I. Background

The purpose of the Truth in Lending Act (TILA; 15 U.S.C. 1601 *et seq.*) is to promote the informed use of consumer credit by providing for disclosures about its terms and cost. The act requires creditors to disclose the cost of credit as a dollar amount (the finance charge) and as an annual percentage rate (APR). Uniformity in creditors' disclosures is intended to assist consumers in comparison shopping. TILA requires additional disclosures for loans secured by a consumer's home and permits consumers to rescind certain transactions that involve their principal dwelling. In addition, the act regulates certain practices of creditors. The act is implemented by the Board's Regulation Z (12 CFR Part 226). The Board's official staff commentary (12 CFR Part 226 (Supp. I)) interprets the regulation, and provides guidance to creditors in applying the regulation to specific transactions. The commentary is a substitute for individual staff interpretations; it is updated periodically to address significant questions that arise.

In December, the Board published proposed amendments to the commentary to Regulation Z (63 FR 67436, December 7, 1998). The Board received about 50 comments. Most of the comments were from financial institutions and other creditors; state attorneys general and consumer representatives also submitted comments. Overall, commenters generally supported the proposed amendments. Views were mixed on comments concerning multifunction cards that are or may be used as credit cards and credit sale transactions where downpayments involve cash payments and property used as a trade-in.

Except as discussed below, the commentary is being adopted as proposed; some technical suggestions or concerns raised by commenters are addressed. In response to concerns about the uncertainty of computer readiness for the Year 2000 date change, the effective date for mandatory compliance with the commentary update is March 31, 2000.

II. Commentary Revisions

Subpart A—General

Section 226.2—Definitions and Rules of Construction

2(a) Definitions

2(a)(15) Credit Card

Section 226.2(a)(15) defines a credit card to include any card or credit device that may be used from time to time to obtain credit. Comment 2(a)(15)–2 provides examples of cards and devices that are and are not credit cards. The comment is revised to include a new example of cards or devices that are credit cards, addressing recent programs where cards are marketed from the outset with both credit and non-credit features. (Two additional examples were proposed. Some commenters suggested technical changes to ensure consistency in the new examples; the changes were made by merging them.)

2(a)(18) Downpayment

Comment 2(a)(18)–3 provides guidance on how a creditor discloses the downpayment if a trade-in is

involved in a credit sale transaction and if the amount of an existing lien exceeds the value of the trade-in. Under Regulation Z, the term ''downpayment'' refers to an amount, including the value of any property used as a trade-in, paid to a seller to reduce the ''cash price.'' If the amount of an existing lien exceeds the value of the property being used as a trade-in and no cash payment is involved, creditors must disclose zero as the downpayment and not a negative number. The proposed comment also added an example where the consumer makes a cash payment. In that example, creditors would apply the cash payment to the excess lien amount rather than reduce the price of the purchased item. In response to commenters' concerns, the comment has been revised to provide flexibility. At their option, creditors may first apply the cash payment to reduce the price of the purchased item.

Many commenters opposed the proposal. Some believed that applying the cash payment to the excess lien amount would be confusing to consumers because the creditor's treatment of the cash payments might not be readily apparent. They argued that the comment should comport with consumers' general expectations—that cash payments would be disclosed as downpayments that reduce the cash price.

Moreover, commenters stated that, where cash payments are made in credit sales involving a trade-in and a lien on the property that exceeds the value of the trade-in, many creditors currently apply the cash payment to any excess lien amount. These creditors disclose the cash payment as a downpayment. Many of these creditors, along with consumer advocates and state Attorneys General commenting on the issue, believe disclosing a downpayment equal to the cash payment is more helpful to consumers. They express concern about the potential for confusion under the proposal when, for example, a cash payment of $500 is applied to an excess lien amount of $2,000 and the downpayment is disclosed as $0, even if the cash payment is disclosed elsewhere in the itemization of the amount financed. (See § 226.18(c).) Some commenters also believed the proposal potentially conflicts with some state laws regarding the disclosure of downpayments.

In response to comments received and upon further analysis, the proposed example has been revised. In disclosing a downpayment where cash payments are made in credit sales involving a trade-in and a lien on the property that exceeds the value of the trade-in, creditors may, but need not, apply the cash payment first to any excess lien amount.

Subpart B—Open-end Credit

Section 226.12—Special Credit Card Provisions

12(a) Issuance of Credit Cards

12(a)(1)

Section 226.12(a) prohibits creditors from issuing credit cards except in response to a consumer's request or application for the card or as a renewal of, or substitute for, a previously accepted credit card. The prohibition, which parallels the statute, addresses various concerns including the potential for theft and fraud and the consumer inconvenience of refuting claims of liability. The law does not prohibit creditors from issuing unsolicited cards that have a non-credit purpose—such as check-guarantee or purchase-price discount cards—so long as they cannot also be used to obtain credit. Consumers may later be able to convert these cards to credit cards if the issuer makes a credit feature available and the consumer requests the credit.

Comment 12(a)(1)–7 provides guidance regarding a card that is issued to and accepted by the consumer as a non-credit device and that subsequently is converted for use as a credit device at the consumer's request. The revisions clarify the comment's applicability to recent programs where unsolicited cards are marketed from the outset as both stored-value cards and credit cards. The Board proposed revisions to the comment to reflect more clearly its intended purpose.

Views were mixed on the proposal. Commenters that opposed the revisions cited a variety of reasons for their position. Some believed the concerns associated with the prohibition—theft, fraud, and the inconvenience of refuting claims of liability—were outdated, due to advances in technology and industry practice regarding fraud prevention, and TILA's $50 maximum potential loss for consumers. Others believed the proposal would inappropriately deter the development of multifunction cards. They discussed the convenience of such cards and urged that any rule be crafted narrowly so as to not affect the continuing development of multifunction cards. The prohibition is, however statutory.

Comment 12(a)(1)–7 is revised in accord with the proposal, with some changes to address commenters' concerns. The fundamental import of the comment remains unchanged: Multifunction cards connected with credit plans when they are issued are credit cards, and they may not be sent without the consumer's prior request or application. New examples have been added to provide further guidance. The comment makes clear that card issuers do not violate the prohibition merely by sending a card imprinted with information that identifies the consumer, so long as the issuer does not propose to connect the card to a credit plan at the time the card is issued.

To the extent that the interpretation of the TILA rule previously may have been unclear, the Board believes that liability should not attach to a card issuer's prior reliance on comment 12(a)(1)–7 in issuing multifunction cards that included a credit feature.

Section 226.14—Determination of Annual Percentage Rate

14(c) Annual Percentage Rate for Periodic Statements

Comment 14(c)–10 addresses finance charges that are imposed during the current billing cycle but that relate to account activity that occurred during a prior billing cycle. The comment is revised to refer expressly to current-cycle or prior-cycle debits and current-cycle or prior-cycle credits.

Subpart C—Closed-end Credit

Section 226.18—Content of Disclosures

18(g) Payment Schedule

The Homeowners Protection Act of 1998 limits the amount of private mortgage insurance (PMI) consumers can be required to purchase. Borrowers may request cancellation of PMI under some circumstances and lenders must terminate PMI automatically when certain conditions are met.

Comment 18(g)–5 is added in response to creditors' requests for guidance on how the new statutory requirements affect TILA disclosures. PMI premiums are finance charges and are figured into disclosures such as the APR and payment schedule. TILA disclosures are based on the legal obligation between the parties, and the comment provides that the payment schedule disclosure should reflect all components of the finance charge, including PMI for the time period there is a legal obligation to maintain the insurance.

Commenters generally supported the proposed guidance, although a few believed the guidance was unnecessary and others believed the guidance was not detailed enough. In response to comments received, the comment is revised to clarify that creditors may rely on assumptions used for variable-rate transactions and discounted and

premium variable-rate transactions in calculating payment schedules that involve PMI.

18(j) Total Sale Price

Comment 18(j)–2 provides the formula for calculating the total sale price in a credit sale transaction; it is the sum of the cash price, certain other amounts financed, and the finance charge. In response to requests for guidance, the commentary is revised to address how the total sale price may be affected by downpayments involving both cash and property used as a trade-in with a lien exceeding the value of the trade-in. This guidance is provided in a new comment 18(j)–3.

Under the proposal, creditors were to calculate the downpayment by applying cash payments first to reduce excess lien amounts. In response to commenters' concerns about the Board's proposed approach to disclosing the downpayment, the guidance has been revised. See comment 2(a)(18)–3.

The flexibility provided to creditors in disclosing a downpayment may result in disclosures of a total sale price that may differ among creditors. However, key disclosures such as the amount financed, finance charge, and APR remain uniform and will not be affected by the creditor's approach in disclosing the downpayment and total sale price.

Subpart E—Special Rules for Certain Home Mortgage Transactions

Section 226.32—Requirements for Certain Closed-end Home Mortgages

32(a) Coverage

32(a)(1)(ii)

Creditors must follow the rules in § 226.32 if the total points and fees payable by the consumer at or before loan closing exceed the greater of $400 or 8 percent of the total loan amount. The Board is required to adjust the $400 amount each year. The adjusted amount for 1999 ($441), published on December 8, 1998 (63 FR 67575) is added to comment 32(a)(1)(ii)–2.

List of Subjects in 12 CFR Part 226

Advertising, Banks, banking, Consumer protection, Credit, Federal Reserve System, Mortgages, Reporting and recordkeeping requirements, Truth in lending.

For the reasons set forth in the preamble, the Board amends 12 CFR part 226 as follows:

PART 226—TRUTH IN LENDING (REGULATION Z)

1. The authority citation for part 226 continues to read as follows:

Authority: 12 U.S.C. 3806; 15 U.S.C. 1604 and 1637(c)(5).

2. In Supplement I to Part 226, under *Section 226.2—Definitions and Rules of Construction,* the following amendments are made:

a. Under *Paragraph 2(a)(15) Credit card.,* paragraph 2. is revised; and

b. Under *Paragraph 2(a)(18) Downpayment.,* paragraph 3. is revised.

The revisions read as follows:

Supplement I to Part 226—Official Staff Interpretations

* * * * *

Subpart A—General

* * * * *

Section 226.2—Definitions and Rules of Construction

2(a) Definitions.

* * * * *

2(a)(15) Credit card.

* * * * *

2. *Examples.* i. Examples of credit cards include:

A. A card that guarantees checks or similar instruments, if the asset account is also tied to an overdraft line or if the instrument directly accesses a line of credit.

B. A card that accesses both a credit and an asset account (that is, a debit-credit card).

C. An identification card that permits the consumer to defer payment on a purchase.

D. An identification card indicating loan approval that is presented to a merchant or to a lender, whether or not the consumer signs a separate promissory note for each credit extension.

E. A card or device that can be activated upon receipt to access credit, even if the card has a substantive use other than credit, such as a purchase-price discount card. Such a card or device is a credit card notwithstanding the fact that the recipient must first contact the card issuer to access or activate the credit feature.

ii. In contrast, a credit card does not include, for example:

A. A check-guarantee or debit card with no credit feature or agreement, even if the creditor occasionally honors an inadvertent overdraft.

B. Any card, key, plate, or other device that is used in order to obtain petroleum products for business purposes from a wholesale distribution facility or to gain access to that facility, and that is required to be used without regard to payment terms.

* * * * *

2(a)(18) Downpayment.

* * * * *

3. *Effect of existing liens.* i. *No cash payment.* In a credit sale, the ''downpayment'' may only be used to reduce the cash price. For example, when a trade-in is used as the downpayment and the existing lien on an automobile to be traded in exceeds the value of the automobile, creditors must disclose a zero on the downpayment line rather than a negative number. To illustrate, assume a consumer owes $10,000 on an existing automobile loan and that the trade-in value of the automobile is only $8,000, leaving a $2,000 deficit. The creditor should disclose a downpayment of $0, not −$2,000.

ii. *Cash payment.* If the consumer makes a cash payment, creditors may, at their option, disclose the entire cash payment as the downpayment, or apply the cash payment first to any excess lien amount and disclose any remaining cash as the downpayment. In the above example:

A. If the downpayment disclosed is equal to the cash payment, the $2,000 deficit must be reflected as an additional amount financed under § 226.18(b)(2).

B. If the consumer provides $1,500 in cash (which does not extinguish the $2,000 deficit), the creditor may disclose a downpayment of $1,500 or of $0.

C. If the consumer provides $3,000 in cash, the creditor may disclose a downpayment of $3,000 or of $1,000.

* * * * *

3. In Supplement I to Part 226, under *Section 226.12—Special Credit Card Provisions,* under *Paragraph 12(a)(1),* paragraph 7. is revised to read as follows:

* * * * *

Subpart B—Open-end Credit

* * * * *

Section 226.12—Special Credit Card Provisions

* * * * *

12(a) Issuance of credit cards.

Paragraph 12(a)(1)

* * * * *

7. *Issuance of non-credit cards.* i. *General.* Under § 226.12(a)(1), a credit card cannot be issued except in response to a request or an application. (See comment 2(a)(15)–2 for examples of cards or devices that are and are not credit cards.) A non-credit card may be sent on an unsolicited basis by an issuer that does not propose to connect the card to any credit plan; a credit feature

may be added to a previously issued non-credit card only upon the consumer's specific request.

ii. *Examples.* A purchase-price discount card may be sent on an unsolicited basis by an issuer that does not propose to connect the card to any credit plan. An issuer demonstrates that it proposes to connect the card to a credit plan by, for example, including promotional materials about credit features or account agreements and disclosures required by § 226.6. The issuer will violate the rule against unsolicited issuance if, for example, at the time the card is sent a credit plan can be accessed by the card or the recipient of the unsolicited card has been preapproved for credit that the recipient can access by contacting the issuer and activating the card.

* * * * *

4. In Supplement I to Part 226, *Section 226.14—Determination of Annual Percentage Rate,* under *Paragraph 14(c) Annual percentage rate for periodic statements.,* paragraph 10.ii. is republished and paragraph 10.ii.B. is revised to read as follows:

* * * * *

Section 226.14—Determination of Annual Percentage Rate

* * * * *

14(c) Annual percentage rate for periodic statements.

* * * * *

10. *Prior-cycle adjustments.*

* * * * *

ii. Finance charges relating to activity in prior cycles should be reflected on the periodic statement as follows:

* * * * *

B. If a finance charge that is posted to the account relates to activity for which a finance charge was debited or credited to the account in a previous billing cycle (for example, if the finance charge relates to an adjustment such as the resolution of a billing error dispute, or an unintentional posting error, or a payment by check that was later returned unpaid for insufficient funds or other reasons), the creditor shall at its option:

1. Calculate the annual percentage rate in accord with ii.A. of this paragraph, or

2. Disclose the finance charge adjustment on the periodic statement and calculate the annual percentage rate for the current billing cycle without including the finance charge adjustment in the numerator and balances associated with the finance charge adjustment in the denominator.

* * * * *

5. In Supplement I to Part 226, under *Section 226.18—Content of Disclosures,* the following amendments are made:

a. Under *18(g) Payment schedule.,* a new paragraph 5. is added; and

b. Under *18(j) Total sale price.,* a new paragraph 3. is added.

The additions read as follows:

* * * * *

Subpart C—Closed-end Credit

* * * * *

Section 226.18—Content of Disclosures

* * * * *

18(g) Payment schedule.

* * * * *

5. *Mortgage insurance.* The payment schedule should reflect the consumer's mortgage insurance payments until the date on which the creditor must automatically terminate coverage under applicable law, even though the consumer may have a right to request that the insurance be cancelled earlier. (For assumptions in calculating a payment schedule that includes mortgage insurance that must be automatically terminated, see comments 17(c)(1)–8 and 17(c)(1)–10.)

* * * * *

18(j) Total sale price.

* * * * *

3. *Effect of existing liens.* When a credit sale transaction involves property that is being used as a trade-in (an automobile, for example) and that has a lien exceeding the value of the trade-in, the total sale price is affected by the amount of any cash provided. (See comment 2(a)(18)–3.) To illustrate, assume a consumer finances the purchase of an automobile with a cash price of $20,000. Another vehicle used as a trade-in has a value of $8,000 but has an existing lien of $10,000, leaving a $2,000 deficit that the consumer must finance.

i. If the consumer pays $1,500 in cash, the creditor may apply the cash first to the lien, leaving a $500 deficit, and reflect a downpayment of $0. The total sale price would include the $20,000 cash price, an additional $500 financed under § 226.18(b)(2), and the amount of the finance charge. Alternatively, the creditor may reflect a downpayment of $1,500 and finance the $2,000 deficit. In that case, the total sale price would include the sum of the $20,000 cash price, the $2,000 lien payoff amount as an additional amount financed, and the amount of the finance charge.

ii. If the consumer pays $3,000 in cash, the creditor may apply the cash first to extinguish the lien and reflect the remainder as a downpayment of $1,000. The total sale price would reflect the $20,000 cash price and the amount of the finance charge. (The cash payment extinguishes the trade-in deficit and no charges are added under § 226.18(b)(2).) Alternatively, the creditor may elect to reflect a downpayment of $3,000 and finance the $2,000 deficit. In that case, the total sale price would include the sum of the $20,000 cash price, the $2,000 lien payoff amount as an additional amount financed, and the amount of the finance charge.

* * * * *

6. In Supplement I to Part 226, *Section 226.32—Requirements for Certain Closed-end Home Mortgages,* under *Paragraph 32(a)(1)(ii),* paragraph 2.iv. is added to read as follows:

* * * * *

Subpart E—Special Rules For Certain Home Mortgage Transactions

* * * * *

Section 226.32—Requirements for Certain Closed-end Home Mortgages

* * * * *

32(a) Coverage.

* * * * *

Paragraph 32(a)(1)(ii).

* * * * *

2. *Annual adjustment of $400 amount.*

* * * * *

iv. For 1999, $441, reflecting a 1.4 percent increase in the CPI–U from June 1997 to June 1998, rounded to the nearest whole dollar.

* * * * *

By order of the Board of Governors of the Federal Reserve System, acting through the Secretary of the Board under delegated authority, March 31, 1999.

Robert deV. Frierson,

Associate Secretary of the Board.

[FR Doc. 99–8413 Filed 4–5–99; 8:45 am]

BILLING CODE 6210–01–P

FARM CREDIT ADMINISTRATION

12 CFR Parts 611 and 620

RIN 3052–AB79

Organization; Disclosure to Shareholders; FCS Board Compensation Limits

AGENCY: Farm Credit Administration.

ACTION: Final rule.

SUMMARY: This final rule amends Farm Credit Administration (FCA) regulations on Farm Credit System (System or FCS) bank director compensation. The amendment removes the requirement for FCS banks to obtain our prior

approval before paying their directors more than the generally applicable limit.

EFFECTIVE DATE: This regulation will become effective 30 days after publication in the **Federal Register** during which either or both houses of Congress are in session. We will publish a notice of the effective date in the **Federal Register**.

FOR FURTHER INFORMATION CONTACT: Alan Markowitz, Senior Policy Analyst, Office of Policy and Analysis, Farm Credit Administration, McLean, VA 22102–5090, (703) 883–4479; or Rebecca S. Orlich, Senior Attorney, Office of General Counsel, Farm Credit Administration, McLean, VA 22102–5090, (703) 883–4020, TDD (703) 883–4444.

SUPPLEMENTARY INFORMATION: We adopt these amendments without change from the proposed rule (63 FR 49305, September 15, 1998), as part of our continuing efforts to reduce the burden of regulatory compliance. We amend § 611.400 to remove the requirement for System banks to obtain our prior approval before paying director compensation in excess of the generally applicable limit. Section 4.21(a) of the Farm Credit Act of 1971, as amended (Act), provides for the maximum amount of annual compensation that System banks may ordinarily pay to directors. Section 4.21(b) authorizes us to waive this limitation under exceptional circumstances. The amended rule provides that:

- Banks may pay a director more than the maximum amount when a director has spent extraordinary time and effort on bank business in exceptional circumstances.
- The additional compensation may not exceed 30 percent of the annual limit.
- Each bank must have a written policy describing any exceptional circumstances under which the board will pay additional compensation.
- Banks must document the exceptional circumstances for each case in which additional amounts are paid.

We also make a conforming amendment to § 620.5(i)(1), regarding disclosure of additional compensation in the annual report to shareholders.

We received comments on the proposed rule from the Farm Credit Council on behalf of its member banks; Western Farm Credit Bank; AgAmerica, FCB; and CoBank, ACB (CoBank). All commenters agreed with us that elimination of our prior approval reduces regulatory burden while preserving the requirement that banks pay additional compensation only in exceptional circumstances. The following excerpt from CoBank's comment was typical of the comments we received. ''Since FCA can and will effectively monitor the payment of director compensation through the examination process, CoBank believes it is both fair and achievable to allow the Banks to make additional compensation determinations based on exceptional circumstances and the documentation to support such compensation.''

List of Subjects

12 CFR Part 611

Agriculture, Banks, banking, Rural areas.

12 CFR Part 620

Accounting, Agriculture, Banks, banking, Reporting and recordkeeping requirements, Rural areas.

For the reasons stated above, parts 611 and 620 of chapter VI, title 12 of the Code of Federal Regulations are amended to read as follows:

PART 611—ORGANIZATION

1. The authority citation for part 611 continues to read as follows:

Authority: Secs. 1.3, 1.13, 2.0, 2.10, 3.0, 3.21, 4.12, 4.15, 4.20, 4.21, 5.9, 5.10, 5.17, 7.0—7.13, 8.5(e) of the Farm Credit Act (12 U.S.C. 2011, 2021, 2071, 2091, 2121, 2142, 2183, 2203, 2208, 2209, 2243, 2244, 2252, 2279a—2279f–1, 2279aa–5(e)); secs. 411 and 412 of Pub. L. 100–233, 101 Stat. 1568, 1638; secs. 409 and 414 of Pub. L. 100–399, 102 Stat. 989, 1003, and 1004.

Subpart D—Rules for Compensation of Board Members

2. Section 611.400 is amended by revising paragraphs (c) and (d)(3) to read as follows:

§ 611.400 Compensation of bank board members.

* * * * *

(c)(1) A Farm Credit bank is authorized to pay a director up to 30 percent more than the statutory compensation limit in exceptional circumstances where the director contributes extraordinary time and effort in the service of the bank and its shareholders.

(2) Banks must document the exceptional circumstances justifying additional director compensation. The documentation must describe:

(i) The exceptional circumstances justifying the additional director compensation, including the extraordinary time and effort the director devoted to bank business; and

(ii) The amount and the terms and conditions of the additional director compensation.

(d) * * *

(3) The exceptional circumstances under which the board would pay additional compensation for any of its directors as authorized by paragraph (c) of this section.

* * * * *

PART 620—DISCLOSURE TO SHAREHOLDERS

3. The authority citation for part 620 continues to read as follows:

Authority: Secs. 5.17, 5.19, 8.11 of the Farm Credit Act (12 U.S.C. 2252, 2254, 2279aa-11); sec. 424 of Pub. L. 100–233, 101 Stat. 1568, 1656.

Subpart B—Annual Report to Shareholders

§ 620.5 [Amended]

4. Section 620.5(i)(1) is amended by removing the words ''under which a waiver of section 4.21 of the Act was granted by the FCA'' and adding in their place the words ''justifying the additional director compensation as authorized by § 611.400(c)(1) of this chapter'' in the second sentence.

Dated: March 30, 1999.

Vivian L. Portis,

Secretary, Farm Credit Administration Board.

[FR Doc. 99–8310 Filed 4–5–99; 8:45 am]

BILLING CODE 6705–01–P

FEDERAL HOUSING FINANCE BOARD

12 CFR Part 935

[No. 99–20]

RIN 3069–AA77

Collateral Eligible To Secure Federal Home Loan Bank Advances

AGENCY: Federal Housing Finance Board.

ACTION: Final rule.

SUMMARY: The Federal Housing Finance Board (Finance Board) is amending its regulation governing eligible collateral for Federal Home Loan Bank (FHLBank) advances to clarify that certain assets, including the insured or guaranteed portions of federally-insured or guaranteed loans and securities representing an equity interest in eligible collateral, qualify as eligible collateral to secure FHLBank advances. The final rule also amends the Finance Board's regulation on collateral verification to eliminate certain ambiguities therein.

DATES: This final rule is effective on April 15, 1999.

FOR FURTHER INFORMATION CONTACT: Eric M. Raudenbush, Attorney-Advisor,

Office of General Counsel, (202) 408–2932, Federal Housing Finance Board, 1777 F Street, NW., Washington, DC 20006, or by electronic mail at raudenbushe@fhfb.gov.

SUPPLEMENTARY INFORMATION:

I. The Proposed Rule

On December 8, 1998, the Finance Board published for comment a proposed rule to amend its Advances Regulation, 12 CFR part 935, primarily in order to codify in the Regulation provisions governing various collateral arrangements that have been the subject of regulatory interpretations and requests for such interpretations from the FHLBanks and their members. *See* 63 FR 67625 (Dec. 8, 1998). The sixty day public comment period closed on February 8, 1999. The Finance Board received a total of forty comments: eleven from FHLBanks, seventeen from FHLBank members, five from trade associations, two from members of Congress, and one each from an investment broker/dealer serving FHLBank members, an accounting firm, a state governor and a non-member corporate credit union. Only the non-member corporate credit union opposed the rule generally.

Section 10(a) of the Federal Home Loan Bank Act (Bank Act) enumerates four categories of collateral that are eligible to secure FHLBank advances: (1) Current whole first mortgage loans on improved residential property and securities representing a whole interest in such mortgages; (2) securities that are issued, guaranteed, or insured by the United States Government, or any agency thereof; (3) deposits of a FHLBank; and (4) other real-estate related collateral in a total amount not to exceed 30 percent of the borrowing member's capital. *See* 12 U.S.C. 1430(a). The Advances Regulation implements and clarifies the statutory requirements of section 10 of the Bank Act that relate to the security interests that a FHLBank must obtain and maintain when making advances to member institutions. Among the issues that the Regulation addresses are: the types and amounts of collateral that a FHLBank may or must accept when making advances; the priority of FHLBank claims to such collateral in relation to other creditors; and requirements regarding the valuation and verification of the existence of pledged collateral. *See* 12 CFR 935.9–12.

In response to numerous requests from both FHLBanks and their members to clarify or interpret these collateral provisions in the context of specific transactions, the Finance Board proposed to amend § 935.9 to make explicit in the Regulation that the FHLBanks may accept as collateral to secure advances to members: (1) the insured or guaranteed portions of federally-insured or guaranteed loans, regardless of delinquency status; (2) securities representing an equity interest in eligible collateral; and (3) eligible mortgage or government securities collateral held by members' wholly-owned investment subsidiaries, under the conditions set forth in the proposed rule. In addition, the Finance Board proposed to amend § 935.11(b) of the Advances Regulation, governing collateral verification, to eliminate an ambiguous reference therein to standards established by the Auditing Standards Board of the American Institute of Certified Public Accountants (AICPA).

II. Comments on the Proposed Rule and Analysis of Changes Made in the Final Rule

A. Eligible Collateral Pledged by a Qualifying Investment Subsidiary

The proposed rule would have amended § 935.1 of the Advances Regulation to include a definition of the term ''Qualifying Investment Subsidiary'' (QIS), which was to include business entities that: (1) Are wholly owned by a member; (2) are operated solely as passive investment vehicles on behalf of that member; and (3) hold only cash equivalents and assets that are eligible collateral under §§ 935.9(a)(1) and (2) of the Advances Regulation. In turn, the proposed rule would have created a new § 935.9(b) under which the FHLBanks would have been expressly permitted to accept pledges of eligible collateral from a member's QIS to secure advances to that member where the FHLBank was able to obtain and maintain a security interest in the collateral pursuant to which its rights and privileges were functionally equivalent to those that the FHLBank would possess if the member were to pledge the collateral directly.

These proposed provisions were intended primarily to address requests from FHLBanks to accept as security for advances to members eligible collateral held by Real Estate Investment Trust and state security corporation subsidiaries. However, a large number of commenters questioned the Finance Board's proposal to address only pledges of collateral from a narrow class of wholly-owned subsidiaries, while ignoring collateral arrangements with other types of affiliates that may be permissible under the Bank Act. In light of these comments, the Finance Board has decided to remove these QIS provisions from the text of the final rule pending further analysis of the issue. It is anticipated that, in the near future, the Finance Board will either finalize the QIS provisions separately in a modified form, or will issue a new proposed rule that addresses in a more comprehensive fashion pledges of collateral from members' affiliates.

B. Equity Interests in Eligible Collateral

Section 935.9(a)(1)(iii) of the proposed rule expressly authorized FHLBanks to accept as collateral for advances to members any security the ownership of which represents an undivided equity interest in whole mortgages or mortgage-backed securities (MBS), all of which qualify as eligible collateral under § 935.9(a)(1). Similarly, § 935.9(a)(2)(ii) of the proposed rule expressly authorized FHLBanks to accept as collateral any security the ownership of which represents an undivided equity interest in underlying assets, all of which qualify as eligible government securities collateral under § 935.9(a)(2). These provisions were intended to permit FHLBanks to accept as collateral shares of mutual funds and similar equity investments where the underlying assets of the fund comprise only eligible collateral.

Seven commenters (two FHLBanks, two members, two trade associations and the investment broker/dealer) expressly supported, and no commenters expressly opposed, these provisions. However, the two FHLBanks opposed the proposed rule's requirement that the underlying assets of the fund consist only of eligible collateral. Noting that it is likely that, for liquidity purposes, such funds may hold a small percentage of assets that do not qualify as eligible collateral, one FHLBank suggested that the FHLBanks be authorized to accept shares of funds where at least 90 percent of the underlying assets are eligible collateral. The other FHLBank suggested that FHLBanks be permitted to lend against the pro-rata share of the underlying assets that do qualify as eligible collateral. In the final rule, the Finance Board has combined the material contained in proposed §§ 935.9(a)(1)(iii) and (a)(2)(ii) into a new § 935.9(a)(5), under which the FHLBanks are permitted to accept shares of mutual funds and similar investments that represent an undivided equity interest in underlying assets that qualify as eligible collateral under either § 935.9(a)(1) or (a)(2). This change makes clear that FHLBanks may accept shares of funds that hold a combination of eligible mortgage assets and eligible government securities, in addition to

those that hold either one or the other type of eligible collateral. In addition, new § 935.9(a)(5) makes clear that such funds may also hold cash or cash equivalents without losing their eligibility as collateral for advances. Because of the complexities of monitoring the fluctuating asset pools of mutual funds and similar investments, the Finance Board has determined that it will not, at this time, permit FHLBanks to accept under new § 935.9(a)(5) shares of funds that hold any assets that are neither eligible collateral under §§ 935.9(a)(1) or (a)(2), nor cash or cash equivalents. Depending on the mix of the underlying assets, however, shares of such funds may constitute eligible collateral under § 935.9(a)(4).

C. Government Securities

In the proposed rule, the Finance Board proposed to redesignate the existing text of § 935.9(a)(2) of the Advances Regulation as § 935.9(a)(2)(i)(A) and to add: a new paragraph (i)(B) to make clear that FHLBanks may accept, as eligible government securities collateral, mortgages or other loans, regardless of delinquency status, to the extent that the repayment of the principal and/or interest on such mortgages or loans is backed by the United States Government or any of its agencies; and a new paragraph (i)(C) to make clear that FHLBanks may also accept as eligible collateral securities that are backed by, or represent equity interests in, pools of loans or mortgages that are insured or guaranteed by the United States Government or its agencies (to the extent of such insurance or guarantee), even if the investment instrument itself is not so insured or guaranteed. Proposed §§ 935.9(a)(2)(i)(B) and (C) have been redesignated in the final rule as §§ 935.9(a)(2)(ii) and (iii), respectively.

Nineteen commenters (nine members, four trade associations, three FHLBanks, two members of Congress and one state governor) expressly supported these changes and one commenter (the non-member corporate credit union) expressly opposed them. Several commenters noted specifically that, in the risk-based capital provisions of their respective regulations, the federal financial institution regulatory agencies recognize that individual loans that are insured or guaranteed by the United States Government possess risk equal to that of government-insured or guaranteed securities representing interests in pools of loans.

A significant number of commenters requested that the Finance Board make clear in the preamble to the final rule that Sallie Mae student loans reinsured by the U.S. Department of Education (DOE) and certificates backed by pools of such loans will be considered to be eligible collateral pursuant to the new provisions. The Finance Board understands that, with respect to at least some Sallie Mae loans made under the Federal Family Education Loan Program (FFELP), the holder of the loan benefits directly only from the guarantee of a Guarantee Agency that is not part of the federal government. While a Guarantee Agency may have a legal right to be reimbursed by the DOE for a portion of guarantee payments made to holders of defaulted student loans, the holders of these loans do not, in most circumstances, have any right to reimbursement from the federal government. Without concluding that Sallie Mae loans may never be considered to be ''government securities,'' the Finance Board has determined that, where a member holding a loan is not the direct beneficiary of insurance or a guarantee payable by the United States or its agencies, such loans will not be considered to be eligible government securities collateral under section 10(a)(2) of the Bank Act. Accordingly, the text of final § 935.9(a)(2)(ii) has been revised to reflect this requirement.

Many commenters responded favorably to the statement in the preamble to the proposed rule that, pursuant to the new provisions, the guaranteed portions of small business loans guaranteed by the Small Business Administration (SBA) could be accepted as government securities collateral under § 935.9(a)(2). Since the publication of the proposed rule, the Finance Board has learned that, under SBA regulations, holders of SBA guaranteed loans made under the SBA's 7(a) Program may not use the guaranteed portions of these loans as collateral for any borrowing without the prior written consent of the SBA, which will be granted only if certain conditions are met. *See* 13 CFR 120.420. While the Finance Board continues to consider the guaranteed portions of SBA loans to be eligible collateral under § 935.9(a)(2)(ii) of the final rule, it is the responsibility of the FHLBank and its borrowing member to ensure that these and any other statutory and regulatory requirements pertaining to the pledging of government-insured or guaranteed loans are met at the time such assets are taken as collateral. The Finance Board has no authority to interpret, waive, or enforce the regulations of other federal agencies and has not undertaken a comprehensive survey of statutory and regulatory requirements that may apply to government-insured or guaranteed loans that may be accepted as collateral under new §§ 935.9(a)(2)(ii) and (iii).

The one commenter that opposed the adoption of the new government securities provisions argued that, by permitting FHLBanks to accept, in addition to mortgages, ''other loans'' insured or guaranteed by the United States or its agencies, the Finance Board is permitting the FHLBanks to stray from their housing finance mission. In fact, section 10(a)(2) of the Bank Act—which is the source of statutory authority for § 935.9(a)(2) of the regulations—does not require that government securities be mortgage-related to be eligible as collateral for FHLBank advances. *See* 12 U.S.C. 1430(a)(2).

D. Collateral Verification

Finally, in the proposed rule, the Finance Board proposed to amend § 935.11(b) of the Advances Regulation, governing the verification of the existence of collateral, to remove therefrom a requirement that each FHLBank establish written collateral verification procedures containing standards similar to those established by the AICPA. Three commenters (two FHLBanks and one member) expressly supported the amendment. Two commenters (one member and the AICPA), while not objecting generally to revising § 935.11(b), stated that any amendment should more clearly set forth objectively measurable expectations regarding collateral verification.

The intent behind the proposed amendment is to direct the FHLBanks to maintain appropriate collateral verification standards and processes and to give the Finance Board examination staff the flexibility to assess the adequacy of specific standards and procedures adopted by each FHLBank. Although, in the course of such a review, examiners would normally look for consistency with generally accepted standards, such as those established by the AICPA, to mandate particular standards in the rule would eliminate the flexibility that the Finance Board has determined is necessary in carrying out these examinations. Accordingly, this amendment remains unchanged in the final rule.

III. Regulatory Flexibility Act

The final rule applies only to the FHLBanks, which do not come within the meaning of ''small business,'' as defined in the Regulatory Flexibility Act (RFA). *See* 5 U.S.C. 601(6). Therefore, in

accordance with section 605(b) of the RFA, 5 U.S.C. 605(b), the Finance Board hereby certifies that this proposed rule, if promulgated as a final rule, will not have a significant economic impact on a substantial number of small entities.

List of Subjects in 12 CFR Part 935

Credit, Federal home loan banks, Reporting and recordkeeping requirements.

Accordingly, the Finance Board amends 12 CFR part 935 as follows:

PART 935—ADVANCES

1. The authority citation for part 935 is revised to read as follows:

Authority: 12 U.S.C. 1422a(a)(3), 1422b(a)(1), 1426, 1429, 1430, 1430b and 1431.

Subpart A—Advances to Members

2. Amend § 935.1 by revising the definition of ''Mortgage-backed security'' to read as follows:

§ 935.1 Definitions.

* * * * *

Mortgage-backed security means:

(1) An equity security representing an ownership interest in:

(i) Fully disbursed, whole first mortgage loans on improved residential real property; or

(ii) Mortgage pass-through or participation securities which are themselves backed entirely by fully disbursed, whole first mortgage loans on improved residential real property; or

(2) An obligation, bond, or other debt security backed entirely by the assets described in paragraph (1)(i) or (ii) of this definition.

* * * * *

3. Amend § 935.9 as follows:

a. Add to the headings of paragraphs (b), (c) and (e) the word ''advances'' preceding the word ''collateral'';

b. Revise paragraph (a) as follows:

§ 935.9 Collateral.

(a) *Eligible security for advances.* At the time of origination or renewal of an advance, each Bank shall obtain, and thereafter maintain, a security interest in collateral that meets the requirements of one or more of the following categories:

(1) *Mortgage loans and privately issued securities.* (i) Fully disbursed, whole first mortgage loans on improved residential real property not more than 90 days delinquent; or

(ii) Privately issued mortgage-backed securities, excluding the following:

(A) Securities that represent a share of only the interest payments or only the principal payments from the underlying mortgage loans;

(B) Securities that represent a subordinate interest in the cash flows from the underlying mortgage loans;

(C) Securities that represent an interest in any residual payments from the underlying pool of mortgage loans; or

(D) Such other high-risk securities as the Board in its discretion may determine.

(2) *Agency securities.* Securities issued, insured or guaranteed by the United States Government, or any agency thereof, including without limitation:

(i) Mortgage-backed securities, as defined in § 935.1 of this part, issued or guaranteed by the Federal Home Loan Mortgage Corporation, the Federal National Mortgage Association, the Government National Mortgage Association, or any other agency of the United States Government;

(ii) Mortgages or other loans, regardless of delinquency status, to the extent that the mortgage or loan is insured or guaranteed by the United States or any agency thereof, or otherwise is backed by the full faith and credit of the United States, and such insurance, guarantee or other backing is for the direct benefit of the holder of the mortgage or loan; and

(iii) Securities backed by, or representing an equity interest in, mortgages or other loans referred to in paragraph (a)(2)(ii) of this section.

(3) *Deposits.* Deposits in a Bank.

(4) *Other collateral.* (i) Except as provided in paragraph (a)(4)(iii) of this section, other real estate-related collateral acceptable to the Bank if:

(A) Such collateral has a readily ascertainable value; and

(B) The Bank can perfect a security interest in such collateral.

(ii) Eligible other real estate-related collateral may include, but is not limited to:

(A) Privately issued mortgage-backed securities not otherwise eligible under paragraph (a)(1)(ii) of this section;

(B) Second mortgage loans, including home equity loans;

(C) Commercial real estate loans; and

(D) Mortgage loan participations.

(iii) A Bank shall not permit the aggregate amount of outstanding advances to any one member, secured by such other real estate-related collateral, to exceed 30 percent of such member's capital, as calculated according to GAAP, at the time the advance is issued or renewed.

(5) *Securities representing equity interests in eligible advances collateral.* Any security the ownership of which represents an undivided equity interest in underlying assets, all of which qualify either as:

(i) Eligible collateral under paragraphs (a)(1) or (2) of this section; or

(ii) Cash or cash equivalents.

* * * * *

4. Amend § 935.11 by revising paragraph (b) to read as follows:

§ 935.11 Pledged collateral; verification.

* * * * *

(b) *Collateral verification.* Each Bank shall establish written procedures and standards for verifying the existence of collateral securing the Bank's advances, and shall regularly verify the existence of the collateral securing its advances in accordance with such procedures and standards.

Dated: March 19, 1999.

By the Board of Directors of the Federal Housing Finance Board.

Bruce A. Morrison,

Chairman.

[FR Doc. 99–8356 Filed 4–5–99; 8:45 am]

BILLING CODE 6725–01–P

DEPARTMENT OF TRANSPORTATION

Federal Aviation Administration

14 CFR Part 39

[Docket No. 99–ANE–08–AD; Amendment 39–11103; AD 99–07–19]

RIN 2120–AA64

Airworthiness Directives; AlliedSignal Inc. TFE731–40R–200G Turbofan Engines

AGENCY: Federal Aviation Administration, DOT.

ACTION: Final rule; request for comments.

SUMMARY: This amendment adopts a new airworthiness directive (AD) that is applicable to AlliedSignal Inc. TFE731–40R–200G turbofan engines. This action requires inspection of the fuel flow meter tube assembly part number (P/N) 3061157–2, which connects the fuel control to the fuel flow meter, and eventual replacement of the tube and fuel flow meter mounting bracket. This amendment is prompted by two in-flight shutdowns on two recently certified TFE731–40R turbofan engines within the last six months that resulted from fuel flow meter tube assembly failures. The actions specified in this AD are intended to prevent fuel from spraying on and around electrical components due to a cracked fuel line, which can result in an in-flight engine shutdown, and could possibly result in an engine fire.

DATES: Effective April 21, 1999.

The incorporation by reference of certain publications listed in the regulations is approved by the Director of the Federal Register as of April 21, 1999.

Comments for inclusion in the Rules Docket must be received on or before June 7, 1999.

ADDRESSES: Submit comments in triplicate to the Federal Aviation Administration (FAA), New England Region, Office of the Regional Counsel, Attention: Rules Docket No. 99–ANE–08–AD, 12 New England Executive Park, Burlington, MA 01803–5299. Comments may also be sent via the Internet using the following address: ''9-ad-engineprop@faa.gov.'' Comments sent via the Internet must contain the docket number in the subject line.

AlliedSignal Inc. service information referenced in this AD may be obtained from AlliedSignal Aerospace Services Attn: Data Distribution, M/S 64–3/2101–201, P.O. Box 29003, Phoenix, AZ 85038–9003; telephone (602) 365–2493, fax (602) 365–5577. Astra service information referenced in this AD may be obtained from Galaxy Aerospace Company, Attn: Publications, One Galaxy Way, Alliance Airport, Fort Worth, TX, 76177; telephone (817) 837–3740, fax (817) 837–3739. This information may be examined at the FAA, New England Region, Office of the Regional Counsel, 12 New England Executive Park, Burlington, MA; or at the Office of the Federal Register, 800 North Capitol Street, NW, suite 700, Washington, DC.

FOR FURTHER INFORMATION CONTACT: Joseph Costa, Aerospace Engineer, Los Angeles Aircraft Certification Office, FAA, Transport Airplane Directorate, 3960 Paramount Blvd., Lakewood, CA 90712–4137; telephone (562) 627–5246, fax (562) 627–5210.

SUPPLEMENTARY INFORMATION: The Federal Aviation Administration (FAA) has received reports of failures of the fuel flow meter tube assembly between the fuel control and the fuel flow meter. These failures caused uncommanded in-flight shutdowns of the AlliedSignal Inc., TFE731–40R–200G turbofan engines. In one incident, an Israel Aircraft Industries, LTD. (IAI) Astra SPX airplane operator experienced an uncommanded engine rollback to shutdown. The post-flight investigation revealed a fracture of the fuel flow meter tube assembly, part number (P/N) 3061157–2, located between the fuel control unit and the fuel flow meter. Before this incident, the operator had experienced fuel flow fluctuations and had performed maintenance in the area of the fuel flow meter tube assembly in accordance with standard troubleshooting procedures. In another incident, an SPX operator experienced a fracture in a fuel flow meter tube assembly of the same P/N. This incident occurred shortly after replacement of the fuel control/main fuel pump. The FAA has concluded that the current rigid tube assembly design is not tolerant of normal maintenance actions and, therefore, this action is necessary to introduce a flexible hose design.

Since the initial incident, the FAA has verified that the fuel flow meter tube assembly, P/N 3061157–2, meets design intent, but could benefit from a more robust design from a maintenance standpoint. This condition, if not corrected, could result in fuel spraying on and around electrical components due to a cracked fuel line, which can result in an in-flight engine shutdown, and could possibly result in an engine fire.

The FAA has reviewed and approved the technical contents of AlliedSignal Inc. Operator Information Wire (OIW) TFE731–40G–99–01, dated January 7, 1999, that describes procedures for visual inspection of the fuel flow meter tube assembly, P/N 3061157–2, for cracks or leakage, and inspection of the clamping of the fuel flow meter and attached tube assemblies for proper installation. Also, the FAA has approved the technical content of AlliedSignal Inc. Alert Service Bulletin (ASB) TFE731–A73–5119 dated March 4, 1999, and has approved the technical content of Astra Alert Service Bulletin 1125–73A–189 dated March 4, 1999, that describes procedures for installing the new flexible fuel line and fuel flow meter mounting bracket.

Since an unsafe condition has been identified that is likely to exist or develop on other AlliedSignal Inc. TFE731–40R–200G turbofan engines of the same type design, this AD is being issued to prevent fuel from spraying on and around electrical components due to a cracked fuel line, which can result in an in-flight engine shutdown, and could possibly result in an engine fire. This AD requires the inspection of the fuel flow meter tube assembly, P/N 3061157–2, for cracks or leakage and for proper clamping within 5 hours time-in-service (TIS) after the effective date of this AD if any maintenance has been performed that required disconnecting the fuel flow meter tube assembly or the support clamping of the fuel meter or attached tube assemblies, or if it is unknown if any maintenance has been performed. This AD also requires inspection of the fuel flow meter tube assembly, P/N 3061157–2, for cracks or leakage and for proper clamping within 25 hours TIS after the effective date of this AD if no maintenance has been performed that required disconnecting the fuel flow meter tube assembly or the support clamping of the fuel meter or attached tube assemblies. This AD also requires replacement of fuel flow meter tube assembly, P/N 3061157–2, with a new flexible fuel line assembly and replacement of the fuel flow meter mounting bracketing within 30 days after the effective date of this AD. The inspections and replacements are required to be done in accordance with the service information described previously.

Since a situation exists that requires the immediate adoption of this regulation, it is found that notice and opportunity for prior public comment hereon are impracticable, and that good cause exists for making this amendment effective in less than 30 days.

Comments Invited

Although this action is in the form of a final rule that involves requirements affecting flight safety and, thus, was not preceded by notice and an opportunity for public comment, comments are invited on this rule. Interested persons are invited to comment on this rule by submitting such written data, views, or arguments, as they may desire. Communications should identify the Rules Docket number and be submitted in triplicate to the address specified under the caption **ADDRESSES.** All communications received on or before the closing date for comments will be considered, and this rule may be amended in light of the comments received. Factual information that supports the commenter's ideas and suggestions is extremely helpful in evaluating the effectiveness of the AD action and determining whether additional rulemaking action would be needed.

Comments are specifically invited on the overall regulatory, economic, environmental, and energy aspects of the rule that might suggest a need to modify the rule. All comments submitted will be available, both before and after the closing date for comments, in the Rules Docket for examination by interested persons. A report that summarizes each FAA-public contact concerned with the substance of this AD will be filed in the Rules Docket.

Commenters wishing the FAA to acknowledge receipt of their comments submitted in response to this notice must submit a self-addressed, stamped postcard on which the following statement is made: ''Comments to Docket Number 99–ANE–08–AD.'' The

postcard will be date stamped and returned to the commenter.

The regulations adopted herein will not have substantial direct effects on the States, on the relationship between the national government and the States, or on the distribution of power and responsibilities among the various levels of government. Therefore, in accordance with Executive Order 12612, it is determined that this final rule does not have sufficient federalism implications to warrant the preparation of a Federalism Assessment.

The FAA has determined that this regulation is an emergency regulation that must be issued immediately to correct an unsafe condition in aircraft, and is not a ''significant regulatory action'' under Executive Order 12866. It has been determined further that this action involves an emergency regulation under DOT Regulatory Policies and Procedures (44 FR 11034, February 26, 1979). If it is determined that this emergency regulation otherwise would be significant under DOT Regulatory Policies and Procedures, a final regulatory evaluation will be prepared and placed in the Rules Docket. A copy of it, if filed, may be obtained from the Rules Docket at the location provided under the caption **ADDRESSES.**

List of Subjects in 14 CFR Part 39

Air transportation, Aircraft, Aviation safety, Incorporation by reference, Safety.

Adoption of the Amendment

Accordingly, pursuant to the authority delegated to me by the Administrator, the Federal Aviation Administration amends part 39 of the Federal Aviation Regulations (14 CFR part 39) as follows:

PART 39—AIRWORTHINESS DIRECTIVES

1. The authority citation for part 39 continues to read as follows:

Authority: 49 U.S.C. 106(g), 40113, 44701.

§ 39.13 [Amended]

2. Section 39.13 is amended by adding the following new airworthiness directive:

99–07–19 AlliedSignal Inc.: Amendment 39–11103. Docket 99–ANE–08–AD.

Applicability: AlliedSignal Inc. TFE731–40R–200G turbofan engines installed on, but not limited to, Israel Aircraft Industries LTD (IAI), Model Astra SPX airplanes.

Note 1: This airworthiness directive (AD) applies to each engine identified in the preceding applicability provision, regardless of whether it has been modified, altered, or repaired in the area subject to the requirements of this AD. For engines that have been modified, altered, or repaired so that the performance of the requirements of this AD is affected, the owner/operator must request approval for an alternative method of compliance in accordance with paragraph (e) of this AD. The request should include an assessment of the effect of the modification, alteration, or repair on the unsafe condition addressed by this AD; and, if the unsafe condition has not been eliminated, the request should include specific proposed actions to address it.

Compliance: Required as indicated, unless done previously.

To prevent fuel from spraying on and around electrical components due to a cracked fuel line, which can result in an in-flight engine shutdown, and could possibly result in an engine fire do the following:

(a) Inspect the fuel flow tube assembly, P/N 3061157–2, within 5 hours time-in-service (TIS) after the effective date of this AD, in accordance with Operator Information Wire (OIW) TFE731–40G–99–01, dated January 7, 1999, Compliance/Accomplishment Instructions step (2)(a) through step (2)(f) if any of the following actions have been done:

(1) If the fuel control or fuel flow meter have been removed or replaced;

(2) If maintenance has been performed which required removal of the clamping which supports the fuel flow meter or the attached tube assemblies; or

(3) If it is unknown if any maintenance has been done.

If the fuel flow tube assembly is cracked or shows evidence of leakage, or if the fuel flow meter clamping is suspected of applying stress to the tube assembly, replace the fuel flow tube assembly with serviceable parts in accordance with the Accomplishment Instructions of AlliedSignal Alert Service Bulletin (ASB) TFE731–A73–5119, dated March 4, 1999, and in accordance with the Accomplishment Instructions of Astra Alert Service Bulletin 1125–73A–189, dated March 4, 1999, prior to further flight.

(b) Inspect the fuel flow tube assembly, P/N 3061157–2, within 25 hours TIS after the effective date of this AD, in accordance with OIW TFE731–40G–99–01, dated January 7, 1999, Compliance/Accomplishment Instructions, step (1)(a) through step (1)(b), if the fuel control or fuel flow meter has not been removed or replaced since new and maintenance has not been done which required the removal of the clamping that supports the fuel flow meter or the attached tube assemblies. If the fuel flow tube assembly is cracked or shows evidence of leakage, or if the fuel flow meter clamping is suspected of applying stress to the tube assembly, replace the fuel flow tube assembly and fuel flow meter mounting bracket with serviceable parts in accordance with the Accomplishment Instructions of AlliedSignal Alert Service Bulletin (ASB) TFE731–A73–5119, dated March 4, 1999, and in accordance with the Accomplishment Instructions of Astra Alert Service Bulletin 1125–73A–189, dated March 4, 1999, prior to further flight.

(c) Within 30 days after the effective date of this AD, replace fuel flow tube assembly, P/N 3061157–2 and existing fuel flow meter mounting bracket with serviceable parts in accordance with the Accomplishment Instructions of AlliedSignal Alert Service Bulletin (ASB) TFE731–A73–5119, dated March 4,1999, and in accordance with the Accomplishment Instructions of Astra Alert Service Bulletin 1125–73A–189, dated March 4, 1999.

(d) If the flexible fuel line assembly, P/N 3061288–1, and fuel flow meter mounting bracket, P/N 3061293–1, are installed, or if rigid fuel flow tube assembly P/N 3060999–2 is installed, no further action is required and the requirements of this AD have been completed.

(e) An alternative method of compliance or adjustment of the compliance time that provides an acceptable level of safety may be used if approved by the Manager, Los Angeles Aircraft Certification Office. Operators shall submit their requests through an appropriate FAA Principal Maintenance Inspector, who may add comments and then send it to the Manager, Los Angeles Aircraft Certification Office.

Note 2: Information concerning the existence of approved alternative methods of compliance with this airworthiness directive, if any, may be obtained from the Los Angeles Aircraft Certification Office.

(f) Special flight permits may be issued in accordance with § § 21.197 and 21.199 of the Federal Aviation Regulations (14 CFR 21.197 and 21.199) to operate the aircraft to a location where the requirements of this AD can be accomplished.

(g) The inspection and part replacement shall be done in accordance with the following service information:

Document No.	Pages	Revision	Date
TFE731–40G–99–01, AlliedSignal Inc. Operator Information Wire	3	Original	January 7, 1999.
TFE731–A73–5119, AlliedSignal Inc. Alert Service Bulletin	10	Original	March 4, 1999.
1125–73A–189, Astra Alert Service Bulletin	8	Original	March 4, 1999.

This incorporation by reference was approved by the Director of the Federal Register in accordance with 5 U.S.C. 552(a) and 1 CFR part 51. Copies of the AlliedSignal Service Bulletin and Operator Information Wire may be obtained from AlliedSignal Aerospace Services Attn: Data Distribution, M/S 64–3/2101–201, P.O. Box 29003, Phoenix, AZ 85038–9003; telephone (602) 365–2493. Copies of the Astra Service Bulletin may be obtained from Galaxy Aerospace Company, Attn: Publications, One Galaxy Way, Alliance Airport, Fort Worth TX, 76177; telephone (817) 837–3740, FAX (817) 837–3739. Copies may be inspected at the FAA, New England Region, Office of the Regional Counsel, 12 New England Executive Park, Burlington, MA; or at the Office of the Federal Register, 800 North Capitol Street, NW, suite 700, Washington, DC.

(h) This amendment becomes effective on April 21, 1999.

Issued in Burlington, Massachusetts, on March 25, 1999.

Jay J. Pardee,

Manager, Engine and Propeller Directorate, Aircraft Certification Service.

[FR Doc. 99–8093 Filed 4–5–99; 8:45 am]

BILLING CODE 4910–13–U

DEPARTMENT OF TRANSPORTATION

Federal Aviation Administration

14 CFR Part 39

[Docket No. 98–CE–82–AD; Amendment 39–11104; AD 99–07–20]

RIN 2120–AA64

Airworthiness Directives; Avions Pierre Robin Model R2160 Airplanes

AGENCY: Federal Aviation Administration, DOT.

ACTION: Final rule.

SUMMARY: This amendment adopts a new airworthiness directive (AD) that applies to all Avions Pierre Robin Model R2160 airplanes. This AD requires repetitively inspecting the vertical stabilizer spar in the area of the lower fitting of the rudder for cracks, loose rivets, or spar web distortion; and modifying the vertical stabilizer spar either immediately or at a certain time period depending on whether discrepancies are found during the inspections. This AD is the result of mandatory continuing airworthiness information (MCAI) issued by the airworthiness authority for France. The actions specified by this AD are intended to detect defects (cracks, loose rivets, or spar web distortion) in the vertical stabilizer spar, which could result in structural failure of the vertical stabilizer with possible reduced or loss of control of the airplane.

DATES: Effective May 17, 1999.

The incorporation by reference of certain publications listed in the regulations is approved by the Director of the Federal Register as of May 17, 1999.

ADDRESSES: Service information that applies to this AD may be obtained from Avions Pierre Robin, 1, route de Troyes, 21121 Darois-France; telephone: 80 44 20 50; facsimile: 80 35 60 80. This information may also be examined at the Federal Aviation Administration (FAA), Central Region, Office of the Regional Counsel, Attention: Rules Docket No. 98-CE–82-AD, Room 1558, 601 E. 12th Street, Kansas City, Missouri 64106; or at the Office of the Federal Register, 800 North Capitol Street, NW, suite 700, Washington, DC.

FOR FURTHER INFORMATION CONTACT: Mr. Karl M. Schletzbaum, Aerospace Engineer, FAA, Small Airplane Directorate, 1201 Walnut, suite 900, Kansas City, Missouri 64106; telephone: (816) 426–6932; facsimile: (816) 426–2169.

SUPPLEMENTARY INFORMATION:

Events Leading to the Issuance of This AD

A proposal to amend part 39 of the Federal Aviation Regulations (14 CFR part 39) to include an AD that would apply to all Avions Pierre Robin Model R2160 airplanes was published in the **Federal Register** as a notice of proposed rulemaking (NPRM) on January 19, 1999 (64 FR 2863). The NPRM proposed to require repetitively inspecting the vertical stabilizer spar in the area of the lower fitting of the rudder for cracks, loose rivets, or spar web distortion; and modifying the vertical stabilizer spar either immediately or at a certain time period depending on whether discrepancies are found during the inspections.

Accomplishment of the proposed inspections as specified in the NPRM would be required in accordance with Avions Pierre Robin Service Bulletin No. 120, dated September 27, 1990. Accomplishment of the proposed modification as specified in the NPRM would be required in accordance with the instructions included with Avions Pierre Robin Kit No. 97.40.03, as specified in Avions Pierre Robin Service Bulletin No. 120, dated September 27, 1990.

The NPRM was the result of mandatory continuing airworthiness information (MCAI) issued by the airworthiness authority for France.

Interested persons have been afforded an opportunity to participate in the making of this amendment. No comments were received on the proposed rule or the FAA's determination of the cost to the public.

The FAA's Determination

After careful review of all available information related to the subject presented above, the FAA has determined that air safety and the public interest require the adoption of the rule as proposed except for minor editorial corrections. The FAA has determined that these minor corrections will not change the meaning of the AD and will not add any additional burden upon the public than was already proposed.

Cost Impact

The FAA estimates that 10 airplanes in the U.S. registry will be affected by this AD, that it will take approximately 20 workhours per airplane to accomplish this action, and that the average labor rate is approximately $60 an hour. Parts cost approximately $100 per airplane. Based on these figures, the total cost impact of this AD on U.S. operators is estimated to be $13,000, or $1,300 per airplane.

Regulatory Impact

The regulations adopted herein will not have substantial direct effects on the States, on the relationship between the national government and the States, or on the distribution of power and responsibilities among the various levels of government. Therefore, in accordance with Executive Order 12612, it is determined that this final rule does not have sufficient federalism implications to warrant the preparation of a Federalism Assessment.

For the reasons discussed above, I certify that this action (1) is not a ''significant regulatory action'' under Executive Order 12866; (2) is not a ''significant rule'' under DOT Regulatory Policies and Procedures (44 FR 11034, February 26, 1979); and (3) will not have a significant economic impact, positive or negative, on a substantial number of small entities under the criteria of the Regulatory Flexibility Act. A copy of the final evaluation prepared for this action is contained in the Rules Docket. A copy of it may be obtained by contacting the Rules Docket at the location provided under the caption **ADDRESSES**.

List of Subjects in 14 CFR Part 39

Air transportation, Aircraft, Aviation safety, Incorporation by reference, Safety.

Adoption of the Amendment

Accordingly, pursuant to the authority delegated to me by the

Administrator, the Federal Aviation Administration amends part 39 of the Federal Aviation Regulations (14 CFR part 39) as follows:

PART 39—AIRWORTHINESS DIRECTIVES

1. The authority citation for part 39 continues to read as follows:

Authority: 49 U.S.C. 106(g), 40113, 44701.

§ 39.13 [Amended]

2. Section 39.13 is amended by adding a new airworthiness directive (AD) to read as follows:

99–07–20 Avions Pierre Robin: Amendment 39–11104; Docket No. 98–CE–82–AD.

Applicability: Model R2160 airplanes, all serial numbers, certificated in any category.

Note 1: This AD applies to each airplane identified in the preceding applicability provision, regardless of whether it has been modified, altered, or repaired in the area subject to the requirements of this AD. For airplanes that have been modified, altered, or repaired so that the performance of the requirements of this AD is affected, the owner/operator must request approval for an alternative method of compliance in accordance with paragraph (f) of this AD. The request should include an assessment of the effect of the modification, alteration, or repair on the unsafe condition addressed by this AD; and, if the unsafe condition has not been eliminated, the request should include specific proposed actions to address it.

Compliance: Required as indicated in the body of this AD, unless already accomplished.

To detect defects (cracks, loose rivets, or spar web distortion) in the vertical stabilizer spar, which could result in structural failure of the vertical stabilizer with possible reduced or loss of control of the airplane, accomplish the following:

(a) Within the next 50 hours time-in-service (TIS) after the effective date of this AD, and thereafter at intervals not to exceed 100 hours TIS until the modification required by paragraph (b) of this AD is incorporated, inspect the vertical stabilizer spar in the area of the lower fitting of the rudder for cracks, loose rivets, or spar web distortion. Accomplish this inspection in accordance with the instructions in Avions Pierre Robin Service Bulletin No. 120, dated September 27, 1990.

(b) At whichever of the compliance times in paragraphs (b)(1) and (b)(2) of this AD that occurs first, modify the vertical stabilizer spar by incorporating Avions Pierre Robin Kit No. 97.40.03 in accordance with the instructions to this kit, as specified in Avions Pierre Robin Service Bulletin No. 120, dated September 27, 1990.

(1) Prior to further flight if cracks, loose rivets, or spar web distortion are/is found during any inspection required by paragraph (a) of this AD; or

(2) Within the next 12 calendar months after the effective date of this AD.

(c) Modifying the vertical stabilizer spar as specified in paragraph (b) of this AD is considered terminating action for the repetitive inspection requirement of this AD.

(d) As of the effective date of this AD, no person may install, on any affected airplane, a vertical stabilizer spar that has not been modified as specified in paragraph (b) of this AD.

(e) Special flight permits may be issued in accordance with sections 21.197 and 21.199 of the Federal Aviation Regulations (14 CFR 21.197 and 21.199) to operate the airplane to a location where the requirements of this AD can be accomplished.

(f) An alternative method of compliance or adjustment of the compliance times that provides an equivalent level of safety may be used if approved by the Manager, Small Airplane Directorate, FAA, 1201 Walnut, suite 900, Kansas City, Missouri 64106. The request shall be forwarded through an appropriate FAA Maintenance Inspector, who may add comments and then send it to the Manager, Small Airplane Directorate.

Note 2: Information concerning the existence of approved alternative methods of compliance with this AD, if any, may be obtained from the Small Airplane Directorate.

(g) Questions or technical information related to the service information referenced in this AD should be directed to Avions Pierre Robin, 1 route de Troyes 21121 Darois, France; telephone: 03.80.44.20.50; facsimile: 03.80.35.60.80. This service information may be examined at the FAA, Central Region, Office of the Regional Counsel, Room 1558, 601 E. 12th Street, Kansas City, Missouri 64106.

(h) The inspection required by this AD shall be done in accordance with Avions Pierre Robin Service Bulletin No. 120, dated September 27, 1990. The modification required by this AD shall be done in accordance with the instructions to Avions Pierre Robin Kit No. 97.40.03 as referenced in Avions Pierre Robin Service Bulletin No. 120, dated September 27, 1990. This incorporation by reference was approved by the Director of the Federal Register in accordance with 5 U.S.C. 552(a) and 1 CFR part 51. Copies may be obtained from Avions Pierre Robin, 1 route de Troyes 21121 Darois, France. Copies may be inspected at the FAA, Central Region, Office of the Regional Counsel, Room 1558, 601 E. 12th Street, Kansas City, Missouri, or at the Office of the Federal Register, 800 North Capitol Street, NW, suite 700, Washington, DC.

Note 3: The subject of this AD is addressed in French AD 90–224(A), dated December 12, 1990.

(i) This amendment becomes effective on May 17, 1999.

Issued in Kansas City, Missouri, on March 25, 1999.

Michael Gallagher,

Manager, Small Airplane Directorate, Aircraft Certification Service.

[FR Doc. 99–8092 Filed 4–5–99; 8:45 am]

BILLING CODE 4910–13–U

DEPARTMENT OF TRANSPORTATION

Federal Aviation Administration

14 CFR Part 39

[Docket No. 98–NM–163–AD; Amendment 39–11106; AD 99–08–02]

RIN 2120–AA64

Airworthiness Directives; Boeing Model 747 Series Airplanes

AGENCY: Federal Aviation Administration, DOT.

ACTION: Final rule.

SUMMARY: This amendment adopts a new airworthiness directive (AD), applicable to certain Boeing Model 747 series airplanes. The amendment requires a one-time inspection to detect discrepancies of the center fuel tank wiring and components, and corrective action, if necessary; and a one-time electrical bonding test of the center fuel tank components, and rework, if necessary. For certain airplanes, the amendment requires a one-time insulation resistance test and a one-time inspection to detect discrepancies of the wiring and components of the fuel quantity indication system (FQIS), and corrective actions, if necessary; replacement of certain FQIS probes with certain newer probes; a system adjustment and system operational test; and modification (installation of a flame arrestor) of the inlet line of the scavenge pump of the center fuel tank. This amendment is prompted by design review and testing results obtained in support of an accident investigation. The actions specified by this AD are intended to prevent ignition sources and consequent fire/explosion in the center fuel tank.

DATES: Effective May 11, 1999.

The incorporation by reference of certain publications listed in the regulations is approved by the Director of the Federal Register as of May 11, 1999.

ADDRESSES: The service information referenced in this AD may be obtained from Boeing Commercial Airplane Group, P.O. Box 3707, Seattle, Washington 98124–2207. This information may be examined at the Federal Aviation Administration (FAA), Transport Airplane Directorate, Rules Docket, 1601 Lind Avenue, SW., Renton, Washington; or at the Office of the Federal Register, 800 North Capitol Street, NW., suite 700, Washington, DC.

FOR FURTHER INFORMATION CONTACT: Dionne Stanley, Aerospace Engineer, Propulsion Branch, ANM–140S, FAA, Transport Airplane Directorate, Seattle

Aircraft Certification Office, 1601 Lind Avenue, SW., Renton, Washington 98055–4056; telephone (425) 227–2250; fax (425) 227–1181.

SUPPLEMENTARY INFORMATION: A proposal to amend part 39 of the Federal Aviation Regulations (14 CFR part 39) to include an airworthiness directive (AD) that is applicable to all Boeing Model 747 series airplanes was published in the **Federal Register** on July 24, 1998 (63 FR 39765). That action proposed to require a one-time inspection to detect discrepancies of the center fuel tank, and corrective actions, if necessary; replacement of all components of the fuel quantity indicating system (FQIS) of the center tanks with new FQIS components; and replacement of the FQIS wiring with new wiring. For certain airplanes, that action proposed to require a one-time inspection to detect discrepancies of the FQIS, and corrective actions, if necessary; and installation of a flame arrestor in the scavenge pumps of the center fuel tank. That action was prompted by design review and testing results obtained in support of an investigation into a 1996 accident involving a Boeing Model 747 series airplane that occurred shortly after takeoff from John F. Kennedy International Airport in Jamaica, New York (hereinafter referred to as ''the accident'').

Interested persons have been afforded an opportunity to participate in the making of this amendment. Due consideration has been given to the comments received.

1. Support for Various Actions in the Proposal

Five commenters support various actions proposed by the AD.

Two commenters strongly support the philosophy in the notice of proposed rulemaking (NPRM) that tank entry would be minimized because multiple issues pertaining to the center wing tank may be accomplished during a single tank entry.

One commenter states that it currently plans to accomplish the actions described in Boeing Service Bulletin 747–28–2205 during scheduled checks to inspect center wing tank components. Another commenter states that it considers a one-time inspection of all Model 747 series airplanes necessary to ensure that no manufacturing or operator rework anomalies exist in today's fleet prior to the introduction of any new maintenance procedures. The FAA infers that those two commenters concur with the proposal to require the actions specified by Boeing Service Bulletin 747–28–2205, dated June 27, 1997, and Revision 1, dated April 16, 1998, as applicable.

Four commenters concur with the proposal to require the actions contained in Boeing Alert Service Bulletin 747–28A2208, dated May 14, 1998.

Four commenters concur with the proposal to require the actions contained in Boeing Alert Service Bulletin 747–28A2210, dated May 14, 1998.

2. Request To Withdraw the Proposal: No Justification

One commenter states that, without any proof that the FQIS or any of the other center wing tank components may have been the cause of the accident, and, without any service experience that supports such a conclusion, there is no technical or operational justification to mandate the proposed rule. The FAA infers that the commenter requests withdrawal of the proposed AD.

The commenter states that on-airplane tests performed by Boeing have not shown any in-service condition that could create any hazard. The commenter also concludes that there is no service experience that shows any evidence of ignition sources (evidence that would have been visible on any of the 248 airplanes that have been inspected).

The FAA does not concur that the proposed AD should be withdrawn based on the lack of conclusive evidence that the accident was caused by failure of the FQIS components or any of the other center fuel tank components. The FAA agrees that no conclusive evidence exists to indicate the accident was caused by failure of the FQIS or center fuel tank components. However, during such accidents, evidence that could lead to a conclusive identification of the cause of the accident often is destroyed. Regardless of the degree of destruction caused by such an accident, there often is no specific physical evidence of low energy electrical arcing. In consideration of the extensive wiring installed on a Boeing Model 747 series airplane, and the extensive damage to the wiring that occurred during the airplane fire, breakup, and subsequent recovery, conclusive identification of a specific wire that was damaged before the fire and breakup is extremely unlikely.

Following the determinations that an explosion in the center fuel tank was the initial event in the breakup of the airplane in the accident, and that the fire was not caused by an external source such as a bomb or missile, the National Transportation Safety Board (NTSB) has necessarily used systems analysis methods to determine what systems on the airplane are most likely to have been the source of ignition energy. That analysis included examinations of system failure modes and effects, service history, and similar airplanes. It was that analysis that led the FAA to propose the requirements specified in the NPRM.

The same commenter stated that on-airplane tests performed by Boeing have not shown any in-service condition that could create any hazard, and that any evidence of ignition sources would have been visible on any of the 248 airplanes that have been inspected. The FAA surmises that the commenter is referring to the bonding and grounding checks recommended in Boeing Service Bulletin 747–28–2205. The FAA agrees that to date none of the bonding and grounding checks have revealed severe bonding or grounding degradation that would pose a safety threat to the airplane. The bonding and grounding provisions within the fuel tank are designed to protect the fuel system components from becoming in-tank ignition sources in the event of a lightning strike or static electricity. However, the investigation of the accident identified certain fuel tank explosion scenarios involving latent failures or aging conditions within the fuel tank that are not related to the bonding or grounding aspects of the fuel system. Those scenarios involve a failure or condition inside the tank (such as conductive debris, copper/sulfur or silver/sulfur contaminants, and damaged in-tank wiring) in combination with a failure outside the tank (such as a hot short or electrical interference condition on the FQIS wiring). Examples of these in-tank and out-of-tank conditions, which can contribute to a multiple-failure ignition scenario, were found in airplane service records and on airplanes that were inspected by the FAA and NTSB.

The FAA does not agree with the commenter's conclusion that evidence of ignition sources would have been visible on any of the 248 airplanes that have been inspected. The FAA surmises that the commenter is referring to the results of the inspections described in Boeing Service Bulletin 747–28–2205. The infrequency of fuel tank explosions on Model 747 series airplanes indicates that the conditions creating the scenario for an airplane fuel tank explosion are uncommon. To date no evidence of ignition sources or conditions that may lead to an ignition source have been identified through inspections described in Service Bulletin 747–28–2205; therefore, the FAA would expect this evidence or condition to be unusual. A

sample inspection of 200 or 300 airplanes may identify degradation or system aging issues, but the FAA has determined that only a thorough inspection of all affected Model 747 series airplanes in the fleet can determine if a rare condition setting the stage for an airplane fuel tank explosion exists in a given airplane. No change to the final rule in this regard is necessary.

3. Request To Withdraw the Proposal: Unnecessary

One commenter states that the proposed AD is unnecessary due to the related rulemaking proposed in NPRM docket 97–NM–272–AD. The FAA infers that the commenter requests that this proposed AD be withdrawn.

The commenter observes that the related proposed AD (97–NM–272–AD) would prevent possible voltage spikes caused by lightning, electromagnetic interference, or electrical failures from entering the fuel tanks. The commenter concluded that ignition sources would be eliminated by either the related NPRM or this proposed AD, and that mandating both proposals is unnecessary.

NPRM docket 97–NM–272–AD has been issued as final rule AD 98–20–40 (63 FR 52147, September 30, 1998), effective November 4, 1998. AD 98–20–40, applicable to all Boeing Model 747–100, -200, -300, SP, and SR series airplanes, requires the installation of shielding and separation of the FQIS electrical wiring.

The FAA does not concur with the commenter's rationale as a basis to withdraw the proposed AD. Although the FAA agrees that both this final rule and AD 98–20–40 address the potential for ignition sources within airplane fuel tanks, each activity addresses different aspects of the multiple-failure ignition scenarios identified by the NTSB and FAA in the course of the accident investigation. These different aspects of the multiple-failure ignition scenarios were identified through the FQIS safety analysis and examinations of Model 747 series airplanes performed by the NTSB and FAA and involve latent failures or aging conditions within the fuel tank combined with a subsequent single failure or electrical interference condition outside the tank.

In attempting to preclude future fuel tank explosions, the FAA finds it necessary to address all aspects of viable ignition scenarios to ensure that potential failures of the fuel system cannot contribute to ignition of the flammable fuel vapors in airplane fuel tanks. By requiring ''best practices'' to be used both inside the tank (to eliminate the possibility for the creation of latent ''spark-gap'' locations in the event of high voltage on the FQIS wires) and outside the tank (to avoid introduction of ignition energy onto the FQIS wires), the FAA has determined that the modifications of the FQIS design of the Model 747 series airplane required by AD 98–20–40 and this final rule will adequately address the identified unsafe condition and meet the appropriate fail-safe standards to provide the level of safety (i.e., tank ignition events should never occur) intended by the regulations in place at the time of the original certification of the design.

No change to the final rule in this regard is necessary.

4. Request To Remove Requirement To Inspect Wiring

Five commenters request that the proposed AD remove the requirement to inspect the center fuel tank wiring and components, as specified by Boeing Service Bulletin 747–28–2205. One commenter, the manufacturer, states that Service Bulletin 747–28–2205 was initiated as a voluntary inspection activity. The service bulletin specifies that the purpose of inspecting the center fuel tank is to gather data on the in-service condition of fuel tanks, identify follow-up activities to ensure continued airworthiness, and develop updated maintenance programs and/or corrective action service bulletins where necessary. The manufacturer stated that, because the purpose of the inspections identified in the service bulletin was to collect data necessary to assess the in-service condition of the fleet, only a sampling of airplanes would be required. The manufacturer adds that, since no unsafe conditions have been identified in the approximately 283 airplanes inspected in accordance with this bulletin, there is no justification for mandating this bulletin. The manufacturer's philosophy has been to address any corrective actions for known issues in separate service bulletins to keep this bulletin from being mandated by regulatory action.

Four commenters agree that the intent of Service Bulletin 747–28–2205 was to conduct a sample program to gather data on in-service airplanes and not to address any unsafe condition.

Two commenters also note that, on all airplanes inspected to date, there have been no immediate safety concerns identified. One commenter states that, based on the inspections performed to date, Boeing is still convinced that the present design is safe.

The FAA does not concur with the commenters' request to withdraw the subject requirement. While the commenters state that Service Bulletin 747–28–2205 was initiated as a voluntary data-gathering inspection activity and that the manufacturer's philosophy has been to address any corrective actions for known issues in separate service bulletins, the FAA has repeatedly stated (e.g., at the NTSB Public Hearing and at ATA meetings) that it would consider mandating accomplishment of Service Bulletin 747–28–2205.

The FAA agrees that to date none of the inspections have revealed severe bonding or grounding degradation or a specific condition that would pose a safety threat to affected airplanes. The infrequency of fuel tank explosions on Model 747 series airplanes indicates that the conditions creating the scenario for such an explosion are uncommon. To date no evidence of ignition sources or conditions that may lead to an ignition source has been identified through inspections performed in accordance with Service Bulletin 747–28–2205; therefore, the FAA expects this evidence or condition to be unusual. While the FAA agrees that a sample inspection of 200 to 300 airplanes may identify degradation or system aging issues, only a thorough inspection of all affected Model 747 series airplanes in the fleet can determine if a rare condition setting the stage for an airplane fuel tank explosion exists in a given airplane. Therefore, the FAA does not concur with the commenters' request to withdraw the requirement to inspect the center fuel tank wiring in accordance with Service Bulletin 747–28–2205.

No change to the final rule in this regard is necessary.

5. Request To Add an Inspection

One commenter requests that the proposed actions specified in Boeing Service Bulletin 747–28–2205 be expanded to include an inspection to ensure that only fuel tube clamps of proper design are used in the center fuel tank and that the electrical resistances of all fuel tube clamps and couplings are within specified limits.

The commenter states that the NTSB, FAA, and National Aeronautics and Space Administration have each documented cases of fuel tube clamps and flexible fuel tube (Wiggins) couplings that were not properly bonded. In addition, the commenter found four different types of fuel tube clamps present in Model 747 series airplanes, some of which were not bonded. Also, the commenter has found fuel tube clamps in the center fuel tank of a Model 747 series airplane with silicon cushions that had degraded in

the presence of fuel. The commenter further notes that military specifications prohibit the use of this type of clamp in fuel tanks.

The FAA does not concur with the commenter's request to add an inspection. At the NTSB's request, an operator measured resistances and capacitances from three airplanes, each a different model, utilizing flexible fuel tube (Wiggins) couplings. The data from those measurements can be found in the NTSB accident investigation docket associated with the subject accident. After a review of the data from each of the three airplanes, the FAA determined that the range of resistances and capacitances measured would not result in an ignition with respect to static charge. The fuel tube clamps would be even less of a concern than the Wiggins fittings (for which the data were taken) because the fuel tube clamps would have lower associated capacitances.

While previous examination of the Wiggins coupling design has identified the potential for generating electrical sparks during a lightning event, standard installations in large aluminum fuel tanks (as in the Model 747) with fay surface bonding where fuel tubes attach to wing structure and the use of bonding jumpers have been shown to provide adequate lighting protection. In that type of installation, the design relies on the bonding jumper and fay surfaces to create a path for conducting the lightning current. The requirement to examine the bonding jumpers and measure the electrical bonding resistance as specified in Boeing Service Bulletin 747–28–2205, Revision 1, verifies the integrity of the provisions for lightning protection. Therefore, no additional measurements or inspections concerning the Wiggins couplings themselves are required.

Previous studies performed regarding the threat of lightning to an aircraft fuel system have not identified tube clamps as ignition sources.

No change to the final rule in this regard is necessary.

6. Request To Revise Reporting Requirements

Several commenters request revision or withdrawal of the proposed requirements to report results of the inspection of the center fuel tank and FQIS wiring. The specific requests are as follows:

- One commenter requests that the proposed requirement to report results of the inspection specified by Boeing Service Bulletin 747–28–2205 be withdrawn. The commenter states that the reporting requirement is necessary only for providing sample results to aid in defining future maintenance requirements. The commenter also is concerned that legible and consistent reporting results are not always obtained during inspections. The commenter states that it would be of considerable concern if corrupt or lost data meant that an operator was noncompliant.
- Three commenters request that the proposed inspection reporting requirements be modified to allow 30 days instead of the proposed 10 days. One commenter, the manufacturer, requests that the proposed AD extend the reporting time from 10 to 30 days because the volume and detail of the records taken during the inspection require a significant effort to collect and document. In addition, some airlines perform a series of inspections on a number of airplanes within a short time frame. One commenter, an operator, states that 10 days is not adequate to provide the reports, based on numerous center fuel tank inspections it has performed (in accordance with Service Bulletin 747–28–2205). That commenter adds that the data for the inspection are quite extensive, and that collating and processing the data take considerable time; in some cases, three weeks were required to input the data into a database and complete a qualitative report.
- One commenter opposes any proposed requirement to reinspect airplanes inspected previously with the original issue of Boeing Service Bulletin 747–28–2205, due to the change in reporting requirements in Revision 1 of that service bulletin. One commenter, an operator, states that the reporting mechanism in the original release of Service Bulletin 747–28–2205 was improved in Revision 1 (the main purpose of the revision). The commenter observed that operators did provide the relevant data to Boeing, but not necessarily in a manner consistent with the mechanism employed in Revision 1 of the service bulletin.
- Two commenters request that, for those airplanes on which the center fuel tank inspections have already been accomplished in accordance with the original version of Boeing Service Bulletin 747–28–2205, the proposed reporting requirements be revised to allow any incorrect or missing data to be obtained and submitted after a scheduled tank entry or ''C'' check, prior to the compliance date of the proposed AD. One commenter, an operator, explained that when the original data from the center fuel tank inspections (in accordance with the original release of Service Bulletin 747–28–2205) were collected, the inspection was not a mandatory project. Although most of the data were collected, about 1% to 4% of the data were missing or incorrect on 13 of 44 airplanes inspected. That commenter interprets the proposed requirement to submit all findings on the previously inspected airplanes to mean that operators would be required to plan another unscheduled tank entry to re-obtain the missing measurements. That commenter plans to obtain the missing measurements during the accomplishment of the installation of the scavenge pump flame arrestor and considers an additional tank entry prior to that installation to be of no value.

The FAA concurs with the request to remove the reporting requirements from the proposal. Because the proposed AD specified that the reporting results of the inspections described in both Service Bulletin 747–28–2205 and Alert Service Bulletin 747–28A2208 be sent directly to the manufacturer, the FAA would not be reviewing those results. Boeing Service Bulletin 747–28–2205 states that the data from the inspection program ''* * * will be used to confirm the intended condition of the tanks and, where necessary, to identify follow-up activities to assure the continued airworthiness of these tanks. These additional activities may include updated maintenance programs and/or corrective action service bulletins.'' Service Bulletin 747–28A2208 states that ''* * * data will be collected and used to confirm the intended conditions of the FQIS * * *''

Ordinarily, the FAA mandates that inspection results be submitted directly to the agency when the FAA intends to use the data to determine if the AD needs to be revised. For example, data reporting may be mandated if that information could be used to identify trends indicating that the AD would need a more restrictive action, such as including additional airplanes or reducing the compliance time. Inspection data from 283 Model 747 series airplanes have been submitted by operators having already completed the actions specified by the original issue of Service Bulletin 747–28–2205. These data have not identified any information that the FAA would consider relevant to the requirements of the proposed AD. The FAA does not expect that any data from Alert Service Bulletin 747–28A2208 will identify information relevant to the requirements of the proposed AD. Because additional data from the accomplishment of either Boeing Service Bulletin 747–28–2205 or Alert Service Bulletin 747–28A2208 would not serve a direct purpose for the FAA, the reporting requirements have

been removed from the final rule. Operators may voluntarily submit their inspection and test data to the manufacturer, as requested in the applicable service bulletins.

The final rule has been revised to delete paragraph (c), which referred to the reporting requirements for the inspections and tests contained in Boeing Service Bulletin 747–28–2205 and Alert Service Bulletin 747–28A2208.

7. Support for Reporting Requirement

One commenter fully supports a requirement for operators to report findings to the FAA. [However, it should be noted that the reporting requirement proposed in the NPRM would have required operators to ''* * * submit a report of the results of the inspections * * * to the Manager, Airline Support, Boeing Commercial Airplane Group.'']

It was not the FAA's intent to require that the inspection reports be submitted to the FAA. As stated earlier, ordinarily, the FAA mandates that reporting requirements be submitted directly to the agency when the FAA intends to use the data to determine if the AD needs to be revised. For example, data reporting may be mandated if that information could be used to identify trends indicating that the AD would need a more restrictive action, such as encompassing more airplanes or a shorter compliance time. Inspection data from 283 Boeing Model 747 series airplanes have been submitted by operators having already completed the original version of Boeing Service Bulletin 747–28–2205. These data have not identified any information that the FAA would consider relevant to the requirements of the proposed AD. The FAA does not expect that any data from Alert Service Bulletin 747–28A2208 will identify information relevant to the requirements of the proposed AD. Because additional data from the accomplishment of either service bulletin would not serve a direct purpose to the FAA, the reporting requirements for Boeing Service Bulletin 747–28–2205 and Alert Service Bulletin 747–28A2208 will be removed from the final rule. The operators may voluntarily submit their inspection and test data to the manufacturer.

The reporting requirements [paragraph (c) of the proposed AD] have been removed from the final rule.

8. Request To Allow Optional Modification

One commenter explained that, during inspections performed on airplanes in accordance with the original version of Boeing Service Bulletin 747–28–2205, some operators, with the airplane manufacturer's approval, modified in-tank bonding by adding additional bonding jumpers. The operator states that the modifications have been necessary for various reasons, but always with the intent to ensure conformity with design requirements, and that, at the next ''D'' check, the airplane may or may not be reworked back to original configuration, depending upon the circumstances of the modification.

The commenter requests that the final rule consider the aforementioned situation so that operators do not have to re-enter the fuel tanks.

The FAA infers that additional bonding jumpers were installed to achieve the resistance values specified by the airplane type design. The FAA additionally infers that the operators are concerned that, because the addition of bonding jumpers is not specified as acceptable rework in the service bulletin, re-entry into the fuel tank would be required to achieve the resistance values by a method specified in the service bulletin. The FAA considers that the bonding jumpers added with the approval of the manufacturer may be an acceptable change to the type design. However, requests for alternative methods of compliance must be submitted in accordance with paragraph (d) of this AD. (Operators of foreign-registered airplanes would need to obtain approval for the change from their respective regulatory authorities as an alternative method of compliance to the AD.) Another option would be for the manufacturer to revise Service Bulletin 747–28–2205 to add this modification, and apply for an alternative method of compliance to the AD. No change to the final rule is necessary.

9. Request To Remove Certain Airplanes From the Requirement To Accomplish Paragraph (a)

One commenter requests that, for new airplanes, the FAA mitigate the intent of paragraph (a) of the proposed AD, ''unless it is clearly the intent of the FAA to document compliance with SB 747–28–2205 during production.''

The commenter interprets paragraph (a) of the NPRM to mean that new production airplanes also would be required to accomplish the proposed inspections and tests during production, or that the operators would be required to perform the inspections and tests after delivery, but no later than 24 months after the effective date of the proposed AD. Therefore, at the time of delivery, airplane records would be required to demonstrate compliance with Boeing Service Bulletin 747–28–2205 or an FAA-approved equivalent method of compliance. Otherwise, the AD compliance letter, provided at the time of new airplane delivery, would be required to report the AD as further action required by the customer after delivery.

The FAA concurs with the commenter's interpretation of the effect paragraph (a) of the proposal would have on production airplanes. However, the intent of the proposal was not to require the incorporation of Service Bulletin 747–28–2205 for the production airplanes. Paragraph (a) of the final rule has been revised to require accomplishment of Service Bulletin 747–28–2205, Revision 1, by airplanes listed in that service bulletin.

10. Request To Revise Work Hour Estimates

One commenter stated that the airplane downtime provided in the referenced service bulletins is not a true reflection of the time necessary to accomplish the actions, as it does not include tank preparation, scheduling manpower, and any necessary rework.

The commenter suggests that the rework associated with the actions described in the original version of Boeing Service Bulletin 747–28–2205 takes as least as long as the inspection itself. Although no specific change was requested by the commenter, the FAA infers that the commenter requests that the work hour estimates for the wiring inspection be revised.

The FAA does not concur with the request to revise the work hour estimates. While the FAA agrees that the service bulletins do not include tank preparation time, the cost estimate for the AD does factor in the preparation time and associated cost for one center fuel tank entry (assuming that all of the required actions will be accomplished concurrently). Normally the cost analysis in AD rulemaking actions does not include ''incidental costs,'' such as planning time or time necessitated by other administrative actions. Because incidental costs may vary significantly from operator to operator, such costs are almost impossible to calculate.

Furthermore, the economic analysis of the AD is limited only to the cost of actions actually required by the rule. It does not consider the costs of ''on condition'' actions, such as repairing damaged components detected during a required inspection (''repair, if necessary''). Such ''on condition'' repair actions would be required to be accomplished—regardless of AD action—in order to correct an unsafe

condition identified in an airplane and to ensure operation of that airplane in an airworthy condition, as required by the Federal Aviation Regulations.

No change to the final rule in this regard is necessary.

11. Request To Revise Cost Estimate

One commenter provided cost estimates different from those proposed in the NPRM, including $12,500 for the work hours, $61,000 for the material, and $69,000 for the downtime required to accomplish the proposed actions, for a total of $142,500 per airplane. Although there was no specific change requested by the commenter, the FAA infers that the commenter requests that the proposed cost estimates be revised.

The FAA does not concur with the request to revise the cost estimates. The commenter did not provide any justification for the different cost estimate.

Moreover, the FAA considers it inappropriate to attribute the costs associated with aircraft ''downtime'' to the cost of the AD, because, normally, compliance with the AD will not necessitate any additional downtime beyond that of a regularly scheduled maintenance hold. However, in cases such as this AD, where additional downtime may be necessary for some airplanes, the FAA does not possess sufficient information to evaluate the number of airplanes that may be so affected or the amount of additional downtime that may be required. Therefore, attempting to estimate such costs would be futile.

No change to the final rule in this regard is necessary.

12. Request To Mandate Accomplishment of Unreleased Service Bulletin

One commenter requests that the proposed rule be modified to mandate the actions contained in a revision to Boeing Alert Service Bulletin 747–28A2208.

The commenter advised that a revision to the alert service bulletin was being prepared. The commenter listed the changes to be included in the revision:

- A clarification of the part numbers for sleeving material and wire;
- A clarification in references to the supplier service bulletin on the compensators, and additional information provided to operators on the installation of a seal boot during the assembly of a splice; and
- A clarification of a reference with respect to the installation of terminals lugs.

The FAA does not concur with the commenter's request to mandate the actions contained in a revision to Alert Service Bulletin 747–28A2208 because the revision will not be released in time to support the procedural schedule for the release of this AD. Use of the phrase ''or later FAA-approved revisions'' violates Office of the Federal Register regulations regarding approval of materials that are incorporated by reference. However, affected operators may apply for an alternative method of compliance, in accordance with paragraph (d) of this AD.

13. Request To Expand Inspection Requirements

One commenter requests that the proposed FQIS inspection (actions as described in Boeing Alert Service Bulletin 747–28A2208) be expanded to include the following actions that were identified during the accident investigation:

- Electrical tests for disconnected/floating wire shielding that has been found inside and outside Boeing Model 747 fuel tanks;
- A test for proper operation of the FQIS indicator light circuit (a failure path was found from the light circuit to the tank wires);
- Isolation of FQIS and Airborne Integrated Data System wiring; Inspections for loose metal debris on and in the volumetric shutoff (ground refueling) unit that can bridge across FQIS compensator circuits; and
- Inspections of the wiring connections at all terminal blocks and terminal strips in the center fuel tank.

The FAA does not concur with the commenter's request to expand the FQIS inspection in this AD. The FAA points out that the proposed AD is intended to address only *in-tank* actions. However, some of the commenter's proposed actions concerning systems or components outside of the fuel tanks are addressed in AD 98–20–40 [airplane models not addressed by that AD will be addressed by a proposed Special Federal Aviation Regulation (SFAR)]. AD 98–20–40 requires the installation of shielding and separation of the electrical wiring of the FQIS and the first four bulleted items in the preceding list.

The commenter also proposes that the FAA require electrical tests for disconnected or floating wire shielding *inside* the fuel tanks. The action specified in the NPRM for accomplishing Boeing Alert Service Bulletin 747–28A2208 requires a visual inspection of the FQIS wire shield termination at the terminal blocks, which, according to the commenter, should detect any loose or disconnected wire shields. However, the commenter adds that, with the new requirement to replace all FQIS wiring outside of the fuel tanks and the surge tank (the tank located on the outboard tip of each wing, which collects any overfill from any of the fuel tanks) with shielded wire, the concern regarding a floating or disconnected wire shield within the fuel tank (in the FQIS) is mitigated.

The FAA does not concur with the request to include electrical tests for disconnected or floating wire shields inside the center fuel tank. With the mandated design change requiring shielding on all outside-the-tank FQIS wiring, a hot short to the FQIS wire bundle outside of the tank would be intercepted and grounded by the FQIS wire bundle shield. Therefore, the only threat posed by a floating or disconnected wire shield inside the fuel tank, such as the HI Z shield, would be system malfunctioning due to potential electromagnetic effects. While system malfunctioning is undesirable, it does not pose a safety threat to the airplane with respect to fuel tank ignition.

The commenter also proposes inspections of the wiring connections at all terminal blocks and terminal strips in the center fuel tank. The FAA points out that paragraph (b) of the AD requires ''a one-time visual inspection of the FQIS wiring and components, in accordance with Boeing Alert Service Bulletin 747–28A2208.'' Included in that alert service bulletin are specific procedures for the inspection of all terminal blocks and terminal strips in the center fuel tank; this inspection is required for compliance with the requirements of this AD. The FAA agrees that an action to visually inspect the terminal strip located in the center wing tank for proper wiring connections is appropriate. The final rule does not require revision in this regard.

14. Request To Remove In-Production Airplanes From Inspection Requirement

One commenter requests that, for new airplanes, the FAA mitigate the intent of paragraph (b) of the proposed AD, ''unless it is clearly the intent of the FAA to document compliance with SB 747–28A2208 during production.''

The FAA does not concur with the commenter's request. The AD, as written, does not require documentation of compliance with Boeing Alert Service Bulletin 747–28A2208 for production airplanes. Paragraphs (b)(1) and (b)(2) of the AD specify those groups listed in the airplane effectivity section of the service bulletin, which includes only 747–100, –200, –300, SR, and SP airplane line

numbers. Therefore, none of the 747–400 production airplanes would be required to comply with paragraph (b) of this AD. No change to the final rule is necessary in this regard.

15. Request To Limit FQIS Inspection Requirement to Younger Airplanes

One commenter requests the FAA to revise the requirement to inspect the FQIS wiring by limiting it to airplanes younger than 20 years. The commenter observes that mandating the combination of the inspection of the FQIS wiring and components and the replacement of the FQIS wiring and components is overdone for airplanes older than 20 years. If rulemaking requires removal of FQIS wiring and components, an extra inspection on the newly installed components cannot be technically justified.

The FAA concurs with the commenter's statement that requiring both the FQIS wiring inspection and probe replacement in accordance with Boeing Alert Service Bulletin 747–28A2208 and the replacement of FQIS wiring and components for airplanes older than 20 years is not technically justified. If both requirements were to be mandated, airplanes that are required to replace FQIS wiring and components would not be subject to the inspection described in Alert Service Bulletin 747–28A2208. However, as discussed in issue 18., the requirement to replace FQIS wiring and components has been removed.

16. Request To Eliminate Duplicate Inspection

Three commenters state that the proposal would require a duplication of the wiring inspection of the FQIS. (The same inspection is described in Boeing Service Bulletin 747–28–2205 and Alert Service Bulletin 747–28A2208.) The commenters request that the AD clarify this requirement so that operators may avoid the duplication of work.

The FAA concurs with the commenters' request. Service Bulletin 747–28–2205 and Alert Service Bulletin 747–28A2208 do indeed contain some duplicate actions. Therefore, the final rule has been revised to continue to require accomplishment of Boeing Alert Service Bulletin 747–28A2208 for the FQIS inspection for Model 747–100, –200, –300, SP, and SR series airplanes. Airplanes already inspected in accordance with Steps 1 through 9 in Figure 11 of the original issue of Service Bulletin 747–28–2205, will receive credit for the accomplishment of Steps 1 through 6 in Figure 16 of Alert Service Bulletin 747–28A2208. Model 747–100, –200, –300, SP, and SR series airplanes will be required to accomplish only step 3 in Figure 11 of Service Bulletin 747–28–2205, Revision 1. However, because Alert Service Bulletin 747–28A2208 does not address Model 747–400 airplanes, those airplanes would be required to perform the tasks outlined in Steps 1 through 9 in Figure 11 of Service Bulletin 747–28–2205, Revision 1.

17. Request To Remove Requirement To Install Flame Arrestor

Three commenters do not support the requirement to accomplish Boeing Alert Service Bulletin 747–28A2210, which describes installation of a flame arrestor in the inlet line of the scavenge pump. Two commenters request the FAA to provide valid technical data and further technical discussion in support of that requirement.

One commenter stated that neither service experience over the past 25 years of operation of the Model 747 nor findings of the 248 airplanes inspected to date indicate that the scavenge pump design could possibly create an unsafe condition. The commenter states that, other than providing an additional layer of safety, there is no technical justification to mandate the actions specified in Alert Service Bulletin 747–28A2210.

The other commenters note that, while the FAA identified the scavenge pump's vulnerability to center fuel tank ignition as a result of a potential mechanical failure of the pump, Alert Service Bulletin 747–28A2210 specifies that ''laboratory testing of the pump has not revealed any condition under which the pump would generate an ignition source.'' The commenters question the necessity for the proposed modification due to the disparity between the FAA and Boeing positions. The commenters suggest that the FAA pursue further examination of this issue and provide valid technical data supporting the need for this modification.

The FAA infers that the commenters are requesting removal of the requirement to install a flame arrestor in the scavenge pump inlet line of the center fuel tank. The FAA does not concur. It was noted during the accident investigation that, although the structure that had contained the scavenge pump was recovered, the scavenge pump itself was missing from the wreckage. The scavenge pump is operated differently than the other pumps within the fuel system. The purpose of the scavenge pump is to reduce the amount of unusable fuel in the center fuel tank by scavenging the fuel left in the tank after the override boost pumps have been turned off (due to low pressure output). This scavenged fuel is relocated to a wing tank for later use. Because of its unique operation, the scavenge pump is run dry, which means that it continues to operate while exposed only to the fuel vapor within the center fuel tank.

Because the scavenge pump was missing and unavailable for further analysis, the NTSB reviewed possible failure scenarios associated with the vane-type scavenge pump. The scavenge pump rotating element is made of steel, as are the pump vanes and sleeving against which the vanes rotate. While the laboratory testing performed on Boeing Model 747 scavenge pumps has not produced an ignition during explosion-proof testing and dry-running the pump, not all of the potential failures are represented by those types of qualification tests. One scenario not represented by qualification tests involves metallic debris within the tank being drawn into the pump and becoming lodged between the steel pump sleeve and the steel rotating components, or causing another type of pump failure. This scenario could cause sparking or excessive heat and potentially act as an ignition source if the pump were exposed to fuel vapors from within the center fuel tank (dry-running). The vulnerability of the scavenge pump to creating a scenario that would allow ignition of the flammable fuel vapors drawn into the pump and have the resultant flame front propagate back through the inlet line to the center fuel tank causing a fuel tank explosion was identified during the design reviews of this component. That revelation led to the manufacturer's willingness to provide a flame arrestor design for the inlet line of the scavenge pump. Therefore, the FAA considers this information as technical justification for requiring the installation of a flame arrestor in the inlet line of the scavenge pump.

No change in the final rule is required.

18. Request To Remove Requirement To Replace FQIS: No Demonstrated Need

Five commenters oppose the FAA's proposal to require replacement of the center tank FQIS components and wiring on Model 747 series airplanes having 20 or more years of service. The FAA infers that these commenters request removal of these replacement actions from the proposed AD.

Four commenters state that there is no evidence to date indicating that sulfide contamination is degrading these specific parts to a point where they would be considered a safety hazard to

the airplane, either by themselves or in combination with system failures.

One commenter notes that it has conducted analyses and tests on these particular FQIS components that were removed from aged Boeing Model 747 series airplanes and reports it has not found an instance in which the level of sulfide contamination presents a hazard. The commenter also states that it provided an extensive response to this issue of sulfides in its response to NPRM (docket) 97–NM–272–AD. The commenter notes that the FAA and NTSB are actively pursuing studies of sulfides and the effect these compounds may have in the fuel tank. The commenter proposes that, prior to rulemaking activities on this issue, further research into the subject of sulfides in fuel tanks be accomplished and suggests that these investigations pursue the mechanisms for the formation of sulfides in commercial fuel tank environments. The commenter further states that any testing should involve, where practical and possible, actual airplane components and wiring, and study of the ignition capability of sulfide-contaminated equipment in a fuel vapor environment.

One commenter states that there are no data that indicate that a replacement of the FQIS installed on Model 747–400 series airplanes is necessary. The commenter points out that there are significant differences in the design and construction of the FQIS components and wiring for Model 747–400 and 747 Classic series airplanes.

The FAA concurs with the request to remove the requirement to replace the FQIS. The FAA agrees with the commenters that the effects of copper/sulfur contaminates are not fully understood at this time. The FAA had anticipated gathering meaningful data from the commenters as to a reasonable replacement time for the FQIS components and wiring, but no additional data were provided through this comment process. Therefore, the FAA may consider further rulemaking on the issue of copper/sulfur or silver/sulfur contamination.

The FAA and NTSB currently plan to research the effects of copper/sulfur deposits on fuel tank system components. The research will include identifying copper/sulfur film properties, identifying the mechanisms related to film growth, and identifying aircraft maintenance methods that will detect and remove deposits before they reach hazardous levels.

The final rule has been revised to remove the requirement to replace all the center tank FQIS components with new FQIS components [paragraph (d) of the NPRM]. The final rule has been further revised to remove the requirement to replace the silver-plated copper FQIS wiring with nickel-plated copper wiring [paragraph (e) of the NPRM].

19. Request To Remove Requirement To Replace FQIS Wiring: Various Reasons

Several commenters propose the removal of the requirement to replace the FQIS wiring and components, for various reasons. As stated previously, the final rule has been revised to remove the requirement to replace all the center tank FQIS components with new FQIS components. The action requiring replacement of the silver-plated copper FQIS wiring with nickel-plated copper wiring also has been removed from the final rule. Therefore, these requests are moot.

20. Request To Reduce Compliance Time

One commenter does not support the proposed compliance time to replace the FQIS components, and to replace silver-plated copper FQIS wiring with new nickel-plated wiring, on airplanes having 20 or more years of service. The commenter encourages the FAA to require a much earlier replacement interval.

The commenter states that the proposed actions are based on finding the presence of corrosion, in the form of copper/sulfur residue, on center fuel tank FQIS components of Model 747 series airplanes. The commenter further states that testing has demonstrated the potential for arcing of sulfur residues, which could create a possible ignition source. However, the commenter has found sulfidation on FQIS components in a 17-year-old Boeing Model 757 series airplane that had accumulated only 24,000 hours of service. The commenter is also aware of Boeing laboratory test results (which were shared with the FAA) that indicate that sulfidation may be present on FQIS components with less than 1,000 hours of service.

As discussed previously, the FAA acknowledges that the effects of copper/sulfur contaminates are not fully understood at this time. The FAA had anticipated gathering meaningful data from the commenters to help determine a reasonable replacement time for the FQIS components and wiring, but no additional data were provided through this comment process. Therefore, the FAA may consider further rulemaking on the issue of copper/sulfur or silver/sulfur contamination.

The FAA and NTSB currently plan to research the effects of copper/sulfur deposits on fuel tank system components. The research will include identifying copper/sulfur film properties, identifying the mechanisms related to film growth, and identifying airplane maintenance methods to detect and remove deposits before they reach hazardous levels. After this research is accomplished, appropriate actions and intervals for those actions may be proposed to address any concerns identified by the research.

As previously stated, the final rule has been revised to remove the requirements to replace all center tank FQIS components with new FQIS components, and to replace silver-plated copper FQIS wiring with nickel-plated copper wiring.

21. Request To Require Replacement of All Silver-Plated Wiring

One commenter strongly supports the action for replacing silver-plated copper FQIS wiring in the center wing tank with new nickel-plated wiring. The commenter encourages the FAA to expand this action to address replacement, with new nickel-plated copper wiring, of all silver-plated copper wiring (not just that on the FQIS) that is exposed to fuel or fuel vapors.

The FAA does not concur with the commenter's proposal. The FAA acknowledges that the effects of copper/sulfur contaminates are not fully understood at this time. The FAA had anticipated gathering meaningful data from the commenters to determine a reasonable replacement time for the FQIS components and wiring, but no additional data were provided through this comment process. Therefore, the FAA may consider further rulemaking on the issue of copper/sulfur or silver/sulfur contamination.

The FAA and NTSB currently plan to research the effects of copper/sulfur deposits on fuel tank system components. The research will include identifying copper/sulfur film properties, identifying the mechanisms related to film growth, and identifying airplane maintenance methods to detect and remove deposits before they reach hazardous levels. After this research is accomplished, appropriate actions and intervals for those actions may be proposed to address any concerns identified by the research.

As previously stated, the final rule has been revised to remove the requirement to replace all center tank FQIS components with new FQIS components. In addition, the final rule has been revised to remove the requirement to replace silver-plated copper FQIS wiring with nickel-plated copper wiring.

22. Request To Approve BF Goodrich FQIS for Compliance

One commenter, an operator, requests that the AD specify the BF Goodrich Digital FQIS system as an acceptable means of compliance with the AD. The operator reports that it expects to have the FQIS system installed on all of its airplanes by January 2000.

The FAA is reviewing the BF Goodrich Digital FQIS system to determine if it is an acceptable means of compliance with AD 98–20–40, which requires the installation of shielding and separation of the electrical wiring of the FQIS. The FAA does not have the information necessary to approve the BF Goodrich Digital FQIS system as an alternative method of compliance to the requirements of the proposed AD.

Furthermore, as stated previously, the final rule has been revised to remove the requirement to replace the FQIS components and wiring due to concerns regarding copper/sulfur or silver/sulfur contamination.

23. Request To Revise Number of Affected Airplanes

One commenter, the manufacturer, provided an estimate of affected airplanes for United States and foreign operators. The FAA infers that the commenter requests the revision of the affected number of airplanes to reflect 248 airplanes operated domestically and a total of 1,077 airplanes operated worldwide.

The FAA concurs. The original estimates in the proposed AD were provided by the manufacturer. Because the manufacturer provided a revised estimate via the NPRM comment process, the final rule has been revised to reflect these numbers.

24. Request To Extend Compliance Time

Five commenters request an extension of the compliance time for the actions specified by the proposed AD.

Two commenters suggest 36 months as a realistic compliance time, considering the time required to schedule these modifications into operators' normal maintenance schedules.

One commenter proposes that, although parts will be available to support the modification described in Boeing Alert Service Bulletin 74–28A2210, the compliance time should be the same for all actions. The commenter is concerned that requiring a different compliance time for this service bulletin could mean that the 40-hour effort of tank preparation would be required for only a two-hour modification procedure. Therefore, this commenter requests the compliance time for all actions to be 36 months.

One commenter requests an increase in the compliance time to allow operators to complete these actions at scheduled ''D'' checks, which would reduce the additional ''down time'' of the airplanes. The commenter encourages the FAA to consider the additional cost associated with taking an airplane out of service.

Another commenter, an operator, stated that a proposed compliance time of 24 months would require most of its airplanes to be inspected/modified in ''C'' checks. The associated cost of accomplishing these actions in ''C'' checks rather than ''D'' checks is $69,000 per airplane.

Some commenters request that the compliance time associated with replacement of the FQIS components be based on a time frame of ''x'' months after parts availability.

Another commenter suggests that, with respect to the proposed requirement to replace all of the FQIS components, a period not to exceed 25 years after manufacture of the airplane would be better matched to the airplane operational life and maintenance schedule.

The FAA does not concur with the commenters' request for an extension of the compliance time. In developing an appropriate compliance time, the FAA considered the safety implications, parts availability, and normal maintenance schedules for timely accomplishment of the required actions. The FAA also has removed from the final rule several proposed actions: replacement of all center tank FQIS components with new FQIS components, replacement of silver-plated copper FQIS wiring with nickel-plated copper wiring, and the reporting requirements. These revisions to the AD will substantially reduce the amount of time operators will need to accomplish the required actions. Also, because replacement of the FQIS components and wiring will no longer be required, the parts availability concern associated with the fact that those system components are no longer in production or do not currently exist is not a factor in considering compliance time.

Because the proposed AD addresses actions to reduce the potential for an ignition source within the center fuel tank, and because some of the original requirements in the proposed NPRM have been removed, the FAA does not find it is in the best interest of the public or industry to extend the compliance time. Associated rulemaking regarding ignition sources, such as a proposed SFAR (which is currently being developed) and AD 98–20–40 (which has a 36-month compliance time), will not be fully implemented for several years. Therefore, it is important that the actions required by this AD be implemented as quickly as possible.

No change to the compliance times in the final rule is necessary.

Additional Changes to Final Rule

Certain requirements in the proposed AD would have been applicable to all Boeing Model 747 series airplanes; those actions have been removed from the final rule. As a result, the applicability of the final rule has been revised to include only those airplanes affected by the remaining requirements.

In the proposed AD, paragraphs (a)(2), (b)(1), and (b)(2) referred to certain Figures in the applicable service bulletins. The FAA finds that clarification of the requirements of paragraphs (a)(2), (b)(1), and (b)(2) is necessary. Although the Figures called out in those paragraphs contain the primary instructions for those actions, additional information may be found in other Figures of the service bulletins for accomplishment of the actions required by those paragraphs. The final rule has been revised to remove specific Figure references from paragraphs (a)(2), (b)(1), and (b)(2).

Conclusion

After careful review of the available data, including the comments noted above, the FAA has determined that air safety and the public interest require the adoption of the rule with the changes described previously. The FAA has determined that these changes will neither increase the economic burden on any operator nor increase the scope of the AD.

Cost Impact

There are approximately 1,077 Boeing Model 747 series airplanes of the affected design in the worldwide fleet. The FAA estimates that 248 airplanes of U.S. registry will be affected by this AD.

The FAA estimates that it will take approximately 40 work hours per airplane to purge, access, and close the center fuel tank, at an average labor rate of $60 per work hour. The cost impact on U.S. operators to purge, access, and close the fuel tank is estimated to be $2,400 per airplane.

The FAA estimates that the inspection of the center fuel tank will be required to be accomplished on 248 airplanes. It will take approximately 56 work hours per airplane to accomplish the inspection, at an average labor rate of

$60 per work hour. Based on these figures, the cost impact of this inspection on U.S. operators is estimated to be $833,280, or $3,360 per airplane.

The FAA estimates that the FQIS inspection and system operational test, probe replacement, and insulation resistance test will be required to be accomplished on 191 airplanes. It will take approximately 60 work hours (maximum) per airplane to accomplish these actions, at an average labor rate of $60 per work hour. Required parts will cost approximately $30,000 per airplane (maximum). Based on these figures, the cost impact of these actions on U.S. operators is estimated to be a maximum of $6,417,600, or $33,600 per airplane.

The FAA estimates that the installation of a flame arrestor will be required to be accomplished on 214 airplanes. It will take approximately 2 work hours per airplane to accomplish the installation, at an average labor rate of $60 per work hour. Required parts will cost approximately $1,107 per airplane. Based on these figures, the cost impact of this installation on U.S. operators is estimated to be $262,578, or $1,227 per airplane.

The cost impact figures discussed above are based on assumptions that no operator has yet accomplished any of the requirements of this AD action, and that no operator would accomplish those actions in the future if this AD were not adopted.

Regulatory Impact

The regulations adopted herein will not have substantial direct effects on the States, on the relationship between the national government and the States, or on the distribution of power and responsibilities among the various levels of government. Therefore, in accordance with Executive Order 12612, it is determined that this final rule does not have sufficient federalism implications to warrant the preparation of a Federalism Assessment.

For the reasons discussed above, I certify that this action (1) is not a ''significant regulatory action'' under Executive Order 12866; (2) is not a ''significant rule'' under DOT Regulatory Policies and Procedures (44 FR 11034, February 26, 1979); and (3) will not have a significant economic impact, positive or negative, on a substantial number of small entities under the criteria of the Regulatory Flexibility Act. A final evaluation has been prepared for this action and it is contained in the Rules Docket. A copy of it may be obtained from the Rules Docket at the location provided under the caption **ADDRESSES.**

List of Subjects in 14 CFR Part 39

Air transportation, Aircraft, Aviation safety, Incorporation by reference, Safety.

Adoption of the Amendment

Accordingly, pursuant to the authority delegated to me by the Administrator, the Federal Aviation Administration amends part 39 of the Federal Aviation Regulations (14 CFR part 39) as follows:

PART 39—AIRWORTHINESS DIRECTIVES

1. The authority citation for part 39 continues to read as follows:

Authority: 49 U.S.C. 106(g), 40113, 44701.

§ 39.13 [Amended]

2. Section 39.13 is amended by adding the following new airworthiness directive:

99–08–02 Boeing: Amendment 39–11106. Docket 98–NM–163–AD.

Applicability: Model 747 airplanes having line numbers 1 through 1124 inclusive, certificated in any category.

Note 1: This AD applies to each airplane identified in the preceding applicability provision, regardless of whether it has been modified, altered, or repaired in the area subject to the requirements of this AD. For airplanes that have been modified, altered, or repaired so that the performance of the requirements of this AD is affected, the owner/operator must request approval for an alternative method of compliance in accordance with paragraph (d) of this AD. The request should include an assessment of the effect of the modification, alteration, or repair on the unsafe condition addressed by this AD; and, if the unsafe condition has not been eliminated, the request should include specific proposed actions to address it.

Compliance: Required as indicated, unless accomplished previously.

To prevent ignition sources and consequent fire/explosion in the center fuel tank, accomplish the following:

(a) For those airplanes listed in Boeing Service Bulletin 747–28–2205, Revision 1, dated April 16, 1998: Within 24 months after the effective date of this AD, accomplish paragraphs (a)(1) and (a)(2) of this AD, in accordance with the service bulletin.

(1) Perform a one-time visual inspection of the center fuel tank wiring and components to detect discrepancies (damage, disbonding, and incorrect installation). If any discrepancy is detected, prior to further flight, repair the discrepant component, or replace it with a new or serviceable component. And

(2) Perform a one-time electrical bonding test of the center fuel tank components. If any measured resistance exceeds the limits specified by the service bulletin, prior to further flight, rework the discrepant component.

Note 2: Revision 1 of Boeing Service Bulletin 747–28–2205 provides two additional actions (inspection of the body fuel tank components and measurement of the ground resistance of the pressure switch case on the auxiliary power unit pump) that were not provided in the original version of this service bulletin. Inspections and testing accomplished prior to the effective date of this AD in accordance with Boeing Service Bulletin 747–28–2205, dated June 27, 1997, are considered acceptable for compliance with the applicable actions specified in this AD.

Note 3: Airplanes required to accomplish paragraph (b) of this AD are exempt from accomplishing steps 1, 2, and 4 through 9 in Figure 11 of Boeing Service Bulletin 747–28–2205, Revision 1, dated April 16, 1998.

(b) For those airplanes listed in Boeing Alert Service Bulletin 747–28A2208, dated May 14, 1998: Within 24 months after the effective date of this AD, perform a one-time insulation resistance test of the fuel quantity indication system (FQIS), a one-time visual inspection of the FQIS wiring and components to detect discrepancies (chafing damage to the wiring and incorrect configuration of the terminal blocks), replacement of ''series 3'' (or earlier series) FQIS probes with new ''series 4'' (or subsequent series) FQIS probes, and system adjustment and system operational test; in accordance with the alert service bulletin. If any discrepancy is detected, prior to further flight, perform corrective actions in accordance with the alert service bulletin.

Note 4: For airplanes on which steps 1 through 9 in Figure 11 of Boeing Service Bulletin 747–28–2205, dated June 27, 1997, or Revision 1, dated April 16, 1998, were accomplished prior to the effective date of this AD, steps 1 through 6 in Figure 16 of Boeing Alert Service Bulletin 747–28A2208, dated May 14, 1998, are not required.

(c) For airplanes having line positions 1 through 971 inclusive: Within 24 months after the effective date of this AD, install a flame arrestor in the inlet line of the electrical motor-operated scavenge pump of the center fuel tank, in accordance with Boeing Alert Service Bulletin 747–28A2210, dated May 14, 1998.

(d) An alternative method of compliance or adjustment of the compliance time that provides an acceptable level of safety may be used if approved by the Manager, Seattle Aircraft Certification Office (ACO), FAA, Transport Airplane Directorate. Operators shall submit their requests through an appropriate FAA Principal Maintenance Inspector, who may add comments and then send it to the Manager, Seattle ACO.

Note 5: Information concerning the existence of approved alternative methods of compliance with this AD, if any, may be obtained from the Seattle ACO.

(e) Special flight permits may be issued in accordance with sections 21.197 and 21.199 of the Federal Aviation Regulations (14 CFR 21.197 and 21.199) to operate the airplane to a location where the requirements of this AD can be accomplished.

(f) The actions shall be done in accordance with Boeing Service Bulletin 747–28–2205, Revision 1, dated April 16, 1998; Boeing Alert Service Bulletin 747–28A2208, dated

May 14, 1998; and Boeing Alert Service Bulletin 747–28A2210, dated May 14, 1998; as applicable. This incorporation by reference was approved by the Director of the Federal Register in accordance with 5 U.S.C. 552(a) and 1 CFR part 51. Copies may be obtained from Boeing Commercial Airplane Group, P.O. Box 3707, Seattle, Washington 98124–2207. Copies may be inspected at the FAA, Transport Airplane Directorate, 1601 Lind Avenue, SW., Renton, Washington; or at the Office of the Federal Register, 800 North Capitol Street, NW., suite 700, Washington, DC.

(g) This amendment becomes effective on May 11, 1999.

Issued in Renton, Washington, on March 29, 1999.

Darrell M. Pederson,

Acting Manager, Transport Airplane Directorate, Aircraft Certification Service.

[FR Doc. 99–8134 Filed 4–5–99; 8:45 am]

BILLING CODE 4910–13–U

DEPARTMENT OF THE TREASURY

Customs Service

19 CFR Part 178 and 192

[T.D. 99–34]

RIN 1515–AC19

Exportation of Used Motor Vehicles

AGENCY: Customs Service, Treasury.

ACTION: Final rule.

SUMMARY: This document amends the Customs Regulations to implement title IV of the Anti Car Theft Act of 1992, which concerns the exportation of used self-propelled vehicles. The amendments concern the nature of the documentation that establishes ownership of a vehicle bound for export and the presentment of that documentation to Customs. The document also clarifies procedures to enable Customs to more efficiently and effectively deter the export of stolen vehicles.

EFFECTIVE DATE: May 6, 1999.

FOR FURTHER INFORMATION CONTACT: Hugh Austin, Outbound Programs, Office of Field Operations, (202) 927–3735.

SUPPLEMENTARY INFORMATION:

Background

Regulations implementing current export control requirements applicable to used self-propelled vehicles, vessels, and aircraft are found at part 192 of the Customs Regulations (19 CFR part 192). Since 1989, these regulations have, in general, required persons or entities seeking to export used self-propelled vehicles to present both the vehicle and documentation, which includes the Vehicle Identification Number (VIN) or other product identification number, to Customs at least three days prior to shipment; Customs then checks the VIN against the databases of the National Crime Information Center (NCIC) to see if the vehicle has been reported stolen.

To strike back against auto thieves and carjackers, on October 25, 1992, the President signed the Anti Car Theft Act of 1992 (the Act)(Pub. L. 102–519, 106 Stat. 3384) in the hope that the legislation would reduce the level of auto thefts and carjackings—a major crime problem costing American car owners billions of dollars each year. *See,* H.R. 4542, 102th Cong., 2d Sess. (1992), *reprinted* in (1992) 5 U.S.C.C.&A.N. 2829. Title IV of the Act contains provisions pertaining to the export of stolen automobiles. Section 401 of title IV contains two provisions intended to tighten Customs enforcement against stolen car exporters. Section 401 amends Part VI of Title IV of the Tariff Act of 1930 by adding: new section 646A (19 U.S.C. 1646b), which directs Customs to conduct random checks of automobiles and containers to ensure that reported VIN information matches the VINs on vehicles being exported; and new section 646B (19 U.S.C. 1646c), which codifies Customs export reporting requirements, and directs Customs to check selected VINs against the information contained at the NCIC.

To implement section 401 of the Act and address certain other procedural problems present in the exportation of used motor vehicles pertaining to the authenticity of documentation presented to Customs to establish ownership of the vehicle to be exported, on October 28, 1997, Customs published a Notice of Proposed Rulemaking in the **Federal Register** (62 FR 55764) to amend the Customs Regulations at § 192.2, Customs Regulations (19 CFR 192.2), which pertains to the requirements for exporting such vehicles. The amendment proposed to revise the documentation requirements contained in paragraph (b) to better ensure that the documentation reflects ownership of the vehicle; the documentation presentment requirement contained in paragraph (c) to clarify the three-day rule; and the authentication requirement of paragraph (d) to make it conform with the above changes. The proposed amendment also added a new paragraph (e) to give port directors the authority to establish when and where the original documentation for the vehicle for export may be presented and where and when the vehicle may be inspected at their ports. The authority citation for part 192 would also be revised to add the statutory citation for the Act discussed (19 U.S.C. 1646c).

The comment period closed on December 29, 1997. Forty-four comments were received. The comments and Customs responses to them follow.

Discussion of Comments

Of the comments received, nine (9) supported the proposed changes and thirty-five (35) either opposed or suggested revisions to the proposed changes. Collectively, these comments concern four major areas.

1. *The requirement to present the original Certificate of Title or a certified copy of the original title issued by a government authority for export of the vehicle presented.*

Comment: The majority of comments received argued that Customs should continue to accept notarized copies of title documents as sufficient proof of ownership of used vehicles intended to be exported, rather than adopt a requirement that only an original or a certified copy of the vehicle title issued by a government authority establishes ownership. These commenters stated that this new documentary requirement will slow the business of exporting used vehicles because of the added costs and time required to obtain these documents from sole-source state-issuing authorities. Accordingly, these commenters propose that Customs not institute the more stringent documentary requirement.

Customs Response: Customs disagrees with the contention that notarized copies of an original title are sufficient to prove ownership of vehicles intended to be exported. Customs needs to be sure that the export of the vehicle presented is authorized by the true owner(s) of the vehicle. In light of the mandate contained in the Anti Car Theft Act of 1992 that Customs tighten enforcement against stolen car exporters, it is Customs position that the only documents which establish verifiable ownership are the original Certificate of Title or a certified copy issued by a government authority.

Original Certificates of Title contain security features designed to defeat fraud, counterfeiting, modifications, etc. Copies of original titles certified by the government-issuing authority also protect against fraud. The fact that these documents are issued by a single government agency in each jurisdiction registering motor vehicles adds to the trustworthiness of these documents.

Concerning notaries certifying ''copies'' of original documents as

representing the ''original'' document, Customs understands the function of the majority of such acts as merely bearing witness/attesting to the placement of an original signature on a document, rather than certifying as to the authenticity of copies of original documents as ''original'' documents. (Indeed, some states expressly provide in their notary public application procedures that notaries do not have the power to certify the authenticity of any document, official or unofficial!) Accordingly, Customs can no longer accept such documents as meeting the requirement of establishing verifiable ownership with an intent to export the vehicle presented. Customs does not know of any document other than an original title for a vehicle or certified copy of the title issued by a government authority that possesses the same level of trustworthiness to aid Customs in the prevention of exporting stolen vehicles.

Accordingly, the more stringent documentary requirement proposed will not be modified. However, because the comments received regarding the documentary requirements admit to some confusion concerning the words ''certified copy'' and ''copy'' of documents, definitions for these terms are added to § 192.1 to clarify their meaning in the regulations. A ''certified'' copy of an original title document is defined to mean ''a document issued by a government authority that serves in place of the original Certificate of Title.'' It is felt that this definition provides the same trustworthiness factors discussed above for the original title. Where the word ''copy'' is used, Customs means a duplicate or photocopy of the original document. However, such a copy must be a true and complete copy, which means that a photocopy of the backside of the original document must also be presented where there is any writing on the backside of the original document (see discussion below regarding assignment). To reflect the requirement that both sides of the document must be copied where the original document contains any writing on its backside, Customs uses the phrase ''complete copies'.

Comment: Where there has been an assignment of an original title, some commenters questioned whether this circumstance will require that a new Certificate of Title be issued before the vehicle can be exported.

Customs Response: Where there has been an assignment of vehicle ownership with the back of the original title showing a proper transfer (with all required information regarding the assignment of ownership completed and legible) of the vehicle from one party to another, Customs believes that a new Certificate of Title need not be issued. The original title will be accepted by Customs, provided complete copies of the original title are submitted for authentication. Customs agrees that requiring an exporter of an assigned vehicle to re-title the used vehicle in his name prior to export would create an undue time and cost burden. However, if requested, the exporter should present the bill of sale with the assigned title.

Comment: Concerning vehicles that are leased or have liens recorded on the original title, one commenter (representing a state licensing authority) requests that Customs make it clear in the regulations that the required letter from the owner of the vehicle is in addition to providing a certified copy of the original title.

Customs Response: For vehicles that are leased or for which a recorded lien exists in the U.S., Customs will require additional documentation that proves consent by such third-parties-in-interest that the vehicles presented may be exported. This third-party proof of consent must be in writing, give express permission for the vehicle to be exported, and bear the original signature of the third-party. The writing must be on the third-party's letterhead and include the date, a description of the vehicle which includes the VIN, the name of the owner of the leased vehicle or the lienholder, and a telephone number at which the owner or lienholder may be contacted. The exporter must provide this separate document with the original title or certified copy of the title to Customs at the time of presentation. If the original title or certified copy of the title shows that the lien has been properly released, then no written authorization from the lienholder will be required to be presented.

Comment: Another commenter (representing an agency of the federal government) requests that U.S. government personnel on official travel be exempt from the proposed documentary presentment rules because the processing of large numbers of relocations by the agency's internal travel office would be severely hampered by complying with Customs proposed reporting procedure. Further, the commenter states that there is no risk that these vehicles are stolen.

Customs Response: Because vehicles belonging to U.S. Government personnel temporarily reassigned abroad pursuant to official travel orders are processed and exported pursuant to official government travel department procedures and because the federal government employee on official travel is normally required to present documentary proof of vehicle ownership to the sponsoring agency's internal office prior to shipping, Customs agrees with the commenter that the threat of such vehicles being stolen is extremely low. Customs also agrees that to require U.S. Government employees to reestablish ownership of the vehicle at the time of export merely duplicates a procedure without benefit to the employee or Customs law enforcement responsibilities.

Accordingly, Customs is amending the general documentation requirement procedures at § 192.2(b)(1) to provide a general exception for U.S. Government military or civilian employees who are shipping their vehicles abroad in conjunction with official reassignment orders. Such personnel are presumed to have complied with the general documentation requirements of § 192.2(b), so long as the employee's official travel orders indicate that there has been compliance with the sponsoring agency's internal travel department procedures for vehicle export.

2. *Acceptable ownership documents for new or Original Equipment Manufacture (OEM) vehicles not titled but issued a Manufacturer's Statement of Origin (MSO); vehicles contained in in-bond movements; or vehicles in a salvage, junk, or scrap condition.*

Comment: Many comments were received discussing the need for Customs to generally clarify the provisions of Part 192 concerning such issues as definitions and other self-propelled ''used'' vehicle identification numbers, and whether an exporter of parts or components of used self-propelled vehicles is obligated to meet the Customs reporting requirements. One commenter recommended that Customs undertake a review of the regulations—presumably § 192.2—to address basic requirements for vehicles identified with Product Identification Numbers (PINs) and Hull Identification Numbers (HINs). Another commenter requested that the modifier ''used'' be inserted immediately before the term ''vehicles'' and before the specific listing of ''automobiles, trucks, vans, minivans, motorcycles and buses'' contained in 19 CFR part 192 subpart A. This same commenter pointed out that the terms, ''used vehicles'', ''vehicles'' and ''vehicle'' are ambiguous and are used interchangeably.

Concerning newly manufactured vehicles, one commenter noted that some states (California and Michigan) do not issue MSOs for newly purchased vehicles, and requests that Customs

accept substitute documents, such as a dealer's invoice.

Concerning vehicles exported in a salvage, junk, or scrap condition, one commenter recommended that Customs remove the word ''satisfactory'' as regards the burden of proof exporters must bear to prove ownership of the vehicle, stating that Customs is not fully aware of all state laws regarding the titling, or lack thereof, of such vehicles and that giving such discretion to Customs agents promotes a lack of uniformity at the ports of exit.

Customs Response: Customs agrees that the modifier ''used'' should be inserted immediately before the term ''vehicles'' contained in § 192.2(b). As concerns the listing of specific types of vehicles (''automobiles, trucks, vans, minivans, motorcycles and buses''), see the discussion below concerning the revised organization of the regulations.

Vehicles which do not meet Customs definition of ''used'' are considered new or OEM vehicles and do not have to be reported to Customs before the vehicle is exported. The question presented by these types of vehicles is whether title has been transferred by a manufacturer, distributor, or dealer to an ultimate purchaser, either legally or equitably, prior to the vehicle's exportation.

If the legal or equitable title of the vehicle has been transferred prior to the vehicle's export, then the new or OEM vehicle must be reported to Customs before the vehicle can be exported; the vehicle having become ''used'' and subject to these export reporting regulations. In these cases, Customs will require the following documentation before export can occur: the Manufacturer's Statement of Origin (MSO) or, in cases where the vehicle is manufactured in a state by a company that does not issue MSOs for newly purchased vehicles, a document such as a dealer's invoice that proves ownership. In this latter instance, the burden of proof will be on the exporter to establish that the jurisdiction from where the vehicle comes does not have any ownership documentation requirements regarding such vehicles, and the exporter will be required to provide an original document showing his basis for ownership of the vehicle.

Regarding the comment as to whether an exporter of parts or components of used, self-propelled vehicles is obligated to meet the Customs reporting requirements of Part 192, these amendments are only concerned with the exportation of entire vehicles, not component parts. Accordingly, the comment is outside the scope of this final rule and no change to the regulations will be made. However, it is noted that the importation and exportation of stolen parts and components of vehicles renders the importer or exporter subject to the penalty and seizure and forfeiture provisions of 19 U.S.C. 1627a(a), as implemented by 19 CFR 192.3(c) and (d).

Vehicles that are exported from the U.S. as part of an in-bond movement are not subject to these export reporting requirements. In-bond movements, however, are subject to inspection at the discretion of Customs.

Regarding vehicles exported in a salvage, junk, or scrap condition, Customs is not concerned with the condition of the vehicle exported, but rather the type and status of the documentation for the vehicle. Since there is no national requirement concerning the titling of such vehicles and frequently government-issuing authorities have inconsistent or varying certification requirements for such vehicles, Customs must require of these vehicles the most authentic documents available to establish ownership of the vehicle to be exported. Accordingly, in those cases where the vehicle was issued an original Certificate of Title or a Salvage Title which remains in force, Customs will require presentation of that original title document pursuant to the provisions of § 192.2(b)(1). Also, in those cases where the vehicle was issued a junk or scrap certificate by a government authority that remains in force, Customs will require presentation of that original document pursuant to the provisions of § 192.2(b)(3)(iii). But, in those cases where the vehicle was not issued a Certificate of Title, a Salvage Title, or a junk or scrap certificate, or the title or certificate is no longer in force, Customs will accept such documents as a Bill of Sale as establishing ownership pursuant to the provisions of § 192.2(b)(3)(iv), provided: (1) The owner certifies to Customs in writing that the government-issuing authority for the jurisdiction has no registration/certification requirements for such vehicles, and (2) the owner attests in writing to the *bona fides* of the sale and that the vehicle presented for export is not stolen. Because a government-issuing authority will not necessarily be involved in the issuance of Bills of Sale, the burden of proof Customs places on exporters in this regard is not deemed unreasonable.

Regarding the commenter's observation that the word ''satisfactory'' (from proposed § 192.2(b)(3)) gives too much discretion to Customs agents and promotes a lack of uniformity at the ports of exit, Customs disagrees. Since the exporter is in a better position to report on the titling practices/requirements of the particular jurisdiction from where the vehicle comes, Customs believes that use of the word ''satisfactory'' does not place an undue burden on the exporter. Proof of a jurisdiction's titling practices/requirements requires merely a letter from the government agency responsible for titling vehicles that applicable regulations either exist or do not exist.

As discussed below, Customs is revising the heading and text of proposed § 192.2(b)(4) to more directly address the documentary requirements for exporting vehicles not titled, including ''junk'' and ''scrap'' vehicles.

3. *The security of original documents presented to Customs.*

Comment: Some commenters were concerned about the security, *i.e.*, safe return, of original title documents left with Customs over the course of the 72-hour reporting requirement. While the risk of loss was cited as the overriding concern, liability issues, the burden of replacing the original, and additional costs in the form of additional exporter processing costs and the potential for lost business were also raised.

Customs Response: If the timely return and risk of loss of original title documents are primary concerns with the process of presenting such documents to Customs, it is recommended that the exporter timely present the required documentation and wait while Customs verifies the authenticity of the documents. Then Customs can directly return the documents to the exporter. Exporters must understand Customs believes that the original title document is the single most important document needed to prevent the illegal export of stolen vehicles and that these regulatory changes are designed to tighten Customs enforcement against the exportation of stolen cars.

Regarding the commenters' issues of liability, the burden of replacing the original, and additional exporter processing costs, in those cases where the original title document was presented to and retained by Customs and cannot be found prior to the vehicle's export, the exporter's authenticated copy of the original documentation serves as evidence of compliance with the reporting requirements. However, where the original title document was returned to the exporter, then the exporter is liable for replacing the documents and bearing any processing costs associated with such replacement. While Customs is willing to work with individual exporters to address problems they may be experiencing at certain ports of entry,

no systemic change to the documentation procedures provided herein will be made.

4. *The time requirement for submitting documents, and presenting the vehicle for inspection at a place other than at the port of export.*

Comment: Several comments were received inquiring as to the time for document presentation and the beginning point of the required 72-hour time period. One exporter stated that the requirement for exporters at seaports to submit all original documentation to Customs 72 hours prior to export, while the requirement for exporters at land borders to submit copies of documentation to Customs 72 hours prior to export, subject to presentation of originals at the time of export, did not seem very equitable. Another commenter suggested the following procedure at land borders regarding cars purchased at auction:

1. At the time of purchase, the auction will complete the Shipper's Export Declaration (SED) with attached certified copies of invoices and/or bills of sale (separate bills of sale are required by California law, but not other states);

2. The auction will give a copy of the SED to the purchasing motor vehicle dealer;

3. The auction will forward the original SED to a designated land border crossing (a specialized facility equipped to follow the procedures to expedite the legitimate export of used motor vehicles into Mexico); and

4. Customs will allow export 72 hours following receipt of the original SED, upon presentation of the motor vehicle with the copy of the SED by the purchasing Dealer.

Additional comments were received inquiring whether a vehicle could be inspected and certified at its point of origin, and whether a vehicle's documents could be verified at the point of export.

Customs Response: Regarding the suggested auction procedure, Customs does not consider the SED document to be as trustworthy a document as the original Certificate of Title issued by a government agency, for the reasons discussed above under Customs first response. Further, the SED is a document protected by the Commerce laws with the result that Customs is generally precluded from sharing the information with other law enforcement agencies. The exporter who is required to complete the SED may or may not be the auto auction. Therefore, as an enforcement tool, the value of the SED is significantly lowered in Customs stated objective to more efficiently and effectively deter the export of stolen vehicles. Lastly, copies of invoices and/or bills of sale that are certified by an auto auction business do not meet the documentation requirements of these regulations for purposes of exporting a vehicle.

Accordingly, no change to the regulations will be made to accommodate this suggested documentation procedure.

Regarding the beginning of the required 72-hour time period, Customs notes that the proposed regulation provides that the original document and the vehicle be presented to Customs *at least* (emphasis supplied) 72 hours, to include not less than two full business days, prior to lading or in the case of the land border ports, prior to the intended date of export. This 72-hour time period is a statutory minimum time period. Customs has reconsidered its proposal to further delineate when this 72-hour time period begins or whether a time period, *i.e.*, the concept of ''business days,'' falls within this time period minimum because, in fact, port directors can require greater time periods within which exporters must submit required documentation. The purpose of requiring the documentation *at least* 72-hours before export of the vehicle is so that Customs can cross-check the VIN with information entered into the NCIC on stolen vehicles. Accordingly, the provisions of proposed § 192.2(c) will be revised to remove the ''2 full business days'' concept so that the provisions of redenominated paragraph (d), which allow port directors to establish the locations and hours of operation for exporters to present required documentation, will not be compromised.

Regarding the different document and vehicle presentation requirements at seaports and land border ports, the operational differences at land border and seaports concerning vehicle presentation were explained in Treasury Decision 90–71, when the provisions of § 192.2(c) were first amended concerning this issue. However, the one commenter's observation that the proposed requirement for exporters at seaports to submit all original documentation to Customs 72 hours prior to export, while the proposed requirement for exporters at land borders to submit copies of documentation to Customs 72 hours prior to export, subject to presentation of originals at the time of export, did not seem very equitable, is valid and Customs agrees that implementation of the Act requires a uniform approach regarding presentment of documentation. Accordingly, the provisions of § 192.2(c) concerning the presentment of documentation are amended to require that exporters at land borders submit original documentation at least 72 hours before export of the vehicle, to parallel the requirement for exporters at seaports.

Concerning the presentation of a vehicle for inspection at a place other than at the port of export, Customs has recently amended its regulations at Part 118, which concerns Centralized Examination Stations, to authorize their use in the export of merchandise (*see*, 63 FR 16683, dated April 6, 1998; T.D. 98–29). Accordingly, Customs can direct that vehicles be inspected at locations other than at the port of export.

Other Changes

After review of the comments and further consideration of the proposal, Customs has decided to restructure § 192.2(b) to present a clearer understanding of the specific documentation required for certain used vehicles to be exported. Accordingly, instead of heading paragraphs (b)(1) through (b)(5) as they were proposed to be headed, the headings are changed to clearly direct readers to the requirements for (1) U.S.-titled vehicles; (2) foreign-titled vehicles; and (3) untitled vehicles. Under the heading for untitled vehicles, there are subparagraphs for the following categories: (1) Newly-manufactured vehicles issued an MSO; (2) newly-manufactured vehicles not issued an MSO; (3) vehicles issued a junk or scrap certificate; and (4) vehicles issued a title or certificate that is not in force or are otherwise not registered. These changes are non-substantive.

With the restructuring of paragraph (b), Customs is not enumerating vehicle types such as automobiles, trucks, buses, etc., in the substantive documentation requirements portion of this final rule document. Customs believes that the definition of ''Self-propelled vehicle'' at § 192.1 is broad enough to cover any vehicle used or designated for running on land and that paragraphs (b)(1) through (b)(3) are applicable as drafted to all self-propelled vehicles that fall within the definition. Accordingly, the one comment suggesting that Customs incorporate by reference the generic vehicle's terminology used by National Highway Traffic Safety Administration and/or the Environmental Protection Agency to indicate which vehicles are subject to the regulations rather than list specific types of vehicles is not adopted.

It is also noted that Customs has decided to reverse the order of proposed paragraphs (d) and (e) of § 192.2 for

organizational clarity. Thus, amended paragraph (d) will address where documents are to be presented and amended paragraph (e) will provide for the authentication of documents procedure.

Also, the general authority citation for Part 192 is revised to add the applicable Anti Car Theft Act provisions, and minor word changes to § 192.1 are made for clarity.

To reflect the paperwork requirements contained at § 192.2(b), part 178 of the Customs Regulations is also amended.

The Regulatory Flexibility Act and Executive Order 12866

In so far as the amendments are intended to assist Customs exercise its law enforcement responsibilities in prohibiting the export of stolen vehicles and to place a minimum burden on legitimate exporters of used vehicles, pursuant to the provisions of the Regulatory Flexibility Act (5 U.S.C. 601 *et seq.*), it is certified that the amendments will not have a significant economic impact on a substantial number of small entities. Accordingly, the amendment is not subject to the regulatory analysis or other requirements of 5 U.S.C. 603 and 604. The amendment does not meet the criteria for a ''significant regulatory action'' as specified in E.O. 12866.

Paperwork Reduction Act

The collection of information contained in this final rule has been reviewed and approved by the Office of Management and Budget (OMB) in accordance with the Paperwork Reduction Act of 1995 (44 U.S.C. 3507) under control number 1515–0157. An agency may not conduct or sponsor, and a person is not required to respond to, a collection of information unless it displays a valid control number assigned by OMB.

The clarification of the collection of information in this final rule is in § 192.2. This information is necessary so that Customs can exercise its law enforcement responsibilities in prohibiting the export of stolen vehicles. Respondents or recordkeepers are already required by statute or regulation to maintain the vast majority of the information covered in this regulation. The likely respondents or recordkeepers are business organizations including importers, exporters and manufacturers.

The estimated average annual burden associated with the collection of information in this final rule is 10 minutes per respondent or recordkeeper. Comments concerning the accuracy of this burden estimate and suggestions for reducing this burden should be directed to the U.S. Customs Service, Information Services Group, Office of Finance, 1300 Pennsylvania Ave., NW, Washington, DC 20229; and to OMB, Attention: Desk Officer for the Department of the Treasury, Office of Information and Regulatory Affairs, Washington, D.C. 20503.

Drafting Information

The principal author of this document was Gregory R. Vilders, Attorney, Regulations Branch, Office of Regulations and Rulings, U.S. Customs Service. However, personnel from other offices participated in its development.

List of Subjects

19 CFR Part 178

Administrative practice and procedure, Collections of information, Exports, Imports, Paperwork requirements, Reporting and recordkeeping requirements.

19 CFR Part 192

Administrative practice and procedure, Customs duties and Inspection, Exports, Government employees, Motor Vehicles, Penalties.

Amendments to the Regulations

For the reasons stated above, parts 178 and 192 of the Customs Regulations (19 CFR parts 178 and 192) is amended as set forth below:

PART 178—APPROVAL OF INFORMATION COLLECTION REQUIREMENTS

1. The authority citation for part 178 continues to read as follows:

Authority: 5 U.S.C. 301; 19 U.S.C. 1624; 44 U.S.C. 3501 *et seq.*

2. Section 178.2 is amended by revising the text of the listing for ''Part 192'' to read as follows:

§ 178.2 Listing of OMB control numbers.

19 CFR section	Description	OMB control No.
*	* * *	*
§ 192.2 ...	Documentation requirements for exporting used, self-propelled vehicles, vessels, and aircraft.	1515–0157

PART 192—EXPORT CONTROL

1. The authority citation for part 192, Customs Regulations (19 CFR part 192), is revised to read as follows:

Authority: 19 U.S.C. 66, 1624, 1627a, 1646a, 1646b, 1646c.

2. Section 192.1 is amended by adding two new definitions, in appropriate alphabetical order, to read as follows:

§ 192.1 Definitions.

* * * * *

Certified. ''Certified'' when used with reference to a copy means a document issued by a government authority that includes on it a signed statement by the authority that the copy is an authentic copy of the original.

Copy. ''Copy'' refers to a duplicate or photocopy of an original document. Where there is any writing on the backside of an original document, a ''complete copy'' means that both sides of the document are copied.

* * * * *

3. Section 192.2 is amended as follows:

a. In the first sentence of paragraph (a), remove the words ''a document'' and add in their place the words ''the required documentation'; and

b. Paragraphs (b), (c) and (d) are revised to read as follows:

§ 192.2 Requirements for exportation.

* * * * *

(b) *Documentation required.*—(1) For U.S.-titled vehicles.—(i)*Vehicles issued an original certificate of title.* For used, self-propelled vehicles issued, by any jurisdiction in the United States, a Certificate of Title or a Salvage Title that remains in force, the owner must provide to Customs, at the time and place specified in this section, the original Certificate of Title or a certified copy of the Certificate of Title and two complete copies of the original Certificate of Title or certified copy of the original.

(ii) *Where title evidences third-party ownership/claims.* If the used, self-propelled vehicle is leased or a recorded lien exists in the U.S., in addition to complying with paragraph (b)(1)(i) of this section, the provisional owner must provide to Customs a separate writing from the third-party-in-interest which expressly provides that the subject vehicle may be exported. This writing must be on the third-party's letterhead paper, and contain a complete description of the vehicle including the Vehicle Identification Number (VIN), the name of the owner or lienholder of the leased vehicle, and the telephone numbers at which that owner or lienholder may be contacted. The writing must bear an original signature of the third-party and state the date it was signed.

(iii) *Where U.S. Government employees are involved.* If the used, self-propelled vehicle is owned by a U.S.

government employee and is being exported in conjunction with that employee's reassignment abroad pursuant to official travel orders, then, in lieu of complying with paragraph (b)(1)(i) of this section, the employee may be required to establish that he has complied with the sponsoring agency's internal travel department procedures for vehicle export.

(2) *For foreign-titled vehicles.* For used, self-propelled vehicles that are registered or titled abroad, the owner must provide to Customs, at the time and place specified in this section, the original document that provides satisfactory proof of ownership (with an English translation of the text if the original language is not in English), and two complete copies of that document (and translation, if necessary).

(3) *For untitled vehicles.*—(i) Newly-manufactured vehicles issued an MSO. For newly-manufactured, self-propelled vehicles that are purchased from a U.S. manufacturer, distributor, or dealer that become used, as defined in this subpart, and are issued a Manufacturer's Statement of Origin (MSO), but not issued a Certificate of Title by any jurisdiction of the United States, the owner must provide to Customs, at the time and place specified in this section, the original MSO and two complete copies of the original MSO.

(ii) *Newly-manufactured vehicles not issued an MSO.* For newly-manufactured, self-propelled vehicles purchased from a U.S. manufacturer, distributor, or dealer that become used, as defined in this subpart, and not issued an MSO or a Certificate of Title by any jurisdiction of the United States, the owner must establish that the jurisdiction from where the vehicle comes does not have any ownership documentation requirements regarding such vehicles and provide to Customs, at the time and place specified in this section, an original document that proves ownership, such as a dealer's invoice, and two complete copies of such original documentation.

(iii) *Vehicles issued a junk or scrap certificate.* For used, self-propelled vehicles for which a junk or scrap certificate issued, by any jurisdiction of the United States, remains in force, the owner must provide to Customs, at the time and place specified in this section, the original certificate or a certified copy of the original document and two complete copies of the original document or certified copy of the original.

(iv) *Vehicles issued a title or certificate that is not in force or are otherwise not registered.* For used, self-propelled vehicles that were issued, by any jurisdiction of the United States, a title or certificate that is no longer in force, or that are not required to be titled or registered, and for which an MSO was not issued, the owner must establish that the jurisdiction from where the vehicle comes does not have any ownership documentation requirements regarding such vehicles and provide to Customs, at the time and place specified in this section, the original document that shows his basis for ownership or right of possession, such as a bill of sale, and two complete copies of that original document. Further, the owner must certify in writing to Customs that the procurement of the vehicle was a bona fide transaction, and that the vehicle presented for export is not stolen.

(c) *When presented.*—(1) *Exportation by vessel or aircraft.* For those vehicles exported by vessel or aircraft, the required documentation and the vehicle must be presented to Customs at least 72 hours prior to export.

(2) *Exportation at land border crossing points.* For those vehicles exported by rail, highway, or under their own power:

(i) The required documentation must be submitted to Customs at least 72 hours prior to export; and

(ii) The vehicle must be presented to Customs at the time of exportation.

(d) *Where presented.* Port directors will establish locations at which exporters must present the required documentation and the vehicles for inspection. Port directors will publicize these locations, including their hours of operation.

(e) *Authentication of documentation.* Customs will determine the authenticity of the documents submitted. Once the authenticity of the documents is established, Customs will mark the documents. In most cases the original document(s) will be returned to the exporter. In those cases where the original title document was presented to and retained by Customs and cannot be found prior to the vehicle's export, the exporter's authenticated copy of the original documentation serves as evidence of compliance with the reporting requirements.

Approved: March 16, 1999.

Raymond W. Kelly,

Commissioner of Customs.

John P. Simpson,

Deputy Assistant Secretary of the Treasury.

[FR Doc. 99–8332 Filed 4–5–99; 8:45 am]

BILLING CODE 4820–02–P

DEPARTMENT OF THE TREASURY

Internal Revenue Service

26 CFR Part 301

[REG–106564–98]

RIN 1545–AW86

Modifications and Additions to the Unified Partnership Audit Procedures; Hearing Cancellation

AGENCY: Internal Revenue Service (IRS), Treasury.

ACTION: Cancellation of notice of public hearing on proposed rulemaking.

SUMMARY: This document provides notice of cancellation of a public hearing on proposed regulations relating to the unified partnership audit procedures.

DATES: The public hearing originally scheduled for Wednesday, April 14, 1999, at 10 a.m., is cancelled.

FOR FURTHER INFORMATION CONTACT: Michael L. Slaughter of the Regulations Unit, Assistant Chief Counsel (Corporate), (202) 622–7180 (not a toll-free number).

SUPPLEMENTARY INFORMATION: A notice of proposed rulemaking, notice of proposed rulemaking by cross-reference to temporary regulations, and notice of public hearing that appeared in the **Federal Register** on Tuesday, January 26, 1999 (64 FR 3886), announced that a public hearing was scheduled for Wednesday, April 14, 1999, at 10 a.m., in room 2615, Internal Revenue Building, 1111 Constitution Avenue, NW., Washington, DC. The subject of the public hearing is proposed regulations under sections 6221 through 6233 of the Internal Revenue Code. The public comment period for these proposed regulations expires on Monday, April 26, 1999. The outlines of topics to be addressed at the hearing were due on Wednesday, March 24, 1999.

The notice of proposed rulemaking and notice of public hearing, instructed those interested in testifying at the public hearing to submit a request to speak and an outline of the topics to be addressed. As of March 31, 1999, no one has requested to speak. Therefore, the public hearing scheduled for Wednesday, April 14, 1999, is cancelled.

Cynthia E. Grigsby,

Chief, Regulations Unit, Assistant Chief Counsel (Corporate).

[FR Doc. 99–8372 Filed 4–5–99; 8:45 am]

BILLING CODE 4830–01–P

DEPARTMENT OF TRANSPORTATION

Coast Guard

33 CFR Part 117

[CGD 08–99–012]

Drawbridge Operating Regulation; Dulac Bayou, LA

AGENCY: Coast Guard, DOT.

ACTION: Notice of temporary deviation from regulations.

SUMMARY: The Commander, Eighth Coast Guard District, has issued a temporary deviation from the regulation governing the operation of the SR 47 swing span drawbridge across Dulac Bayou, mile 0.6, at Dulac, Terrebonne Parish, Louisiana. This deviation allows the Louisiana Department of Transportation and Development to close the bridge continuously from 8 a.m. on April 26, 1999 through 3 p.m. on April 30, 1999. This temporary deviation is issued to allow for the replacement of the link pins of the hydraulic pistons, as extensive but necessary maintenance operation. Presently, the draw opens on signal at all times.

DATES: This deviation is effective from 8 a.m. on April 26, 1999 through 3 p.m. on April 30, 1999.

ADDRESSES: Unless otherwise indicated, documents referred to in this notice are available for inspection or copying at the office of the Eighth Coast Guard District, Bridge Administration Branch, Commander (ob), Eighth Coast Guard District, 501 Magazine Street, New Orleans, Louisiana, 70130–3396. The Bridge Administration Branch of the Eighth Coast Guard District maintains the public docket for this temporary deviation.

FOR FURTHER INFORMATION CONTACT: Phil Johnson, Bridge Administration Branch, telephone (504) 589–2965.

SUPPLEMENTARY INFORMATION: The SR 57 swing span drawbridge across Dulac Bayou, mile 0.6, in Dulac, Terrebonne Parish, Louisiana, has a vertical clearance of 7 feet above high water in the closed-to-navigation position and unlimited clearance in the open-to-navigation position. Navigation on the waterway consists of tugs with tows, fishing vessels, sailing vessels, and other recreational craft. The Louisiana Department of Transportation and Development requested a temporary deviation from the normal operation of the drawbridge in order to accommodate the maintenance work, involving removal and replacement of the link pins of the hydraulic pistons. This work is essential for the continued operation of the draw span.

The District Commander has, therefore, issued a deviation from the regulations in 33 CFR 117.5 authorizing the draw of the SR 57 swing span bridge across Dulac Bayou, mile 0.6, at Dulac, Louisiana to remain in the closed to navigation position from 8 a.m. on April 26, 1999 through 3 p.m. on April 30, 1999.

Dated: March 29, 1999.

Paul J. Pluta,

Rear Admiral, U.S. Coast Guard Commander, Eighth Coast Guard District.

[FR Doc. 99–8474 Filed 4–5–99; 8:45 am]

BILLING CODE 4910–15–M

DEPARTMENT OF TRANSPORTATION

Coast Guard

33 CFR Part 165

[COTP Southeast Alaska 99–001]

RIN 2115–AA97

Safety Zone; Ward Cove, Tongass Narrows, Ketchikan, AK

AGENCY: Coast Guard, DOT.

ACTION: Temporary final rule; request for comments.

SUMMARY: The Coast Guard is establishing a temporary safety zone encompassing the navigable waters of Ward Cove, on Tongass Narrows, Ketchikan, Alaska. The safety zone is needed to protect maritime vessels transiting the area from a potential navigation impediment created by the implosion of the Ketchikan Pulp Company's Bleach Plant, Digester and Accumulator buildings. This safety zone is established to encompass the navigable waters bounded by 55°23′58″ N, 131°43′37″ W, northwest across the mouth of Ward Cove to 55°24′N, 131°44′13″ W and all waters inside Ward Cove east of this line. Entry into, transit through or anchoring within this Safety Zone is prohibited unless authorized by the Captain of the Port Southeast Alaska or the Coast Guard vessel on scene. The Coast Guard vessel on scene may be contacted on VHF Channel 16.

DATES: This temporary final rule becomes effective at 9 a.m. AST, on April 1, 1999, and terminates at 12:01 a.m. ADT on April 15, 1999.

ADDRESSES: Documents as indicated in this preamble are available for inspection or copying at Supervisor, U.S. Coast Guard, Marine Safety Detachment, 2030 Sealevel Drive, Suite 203, Ketchikan, Alaska between 8 a.m. and 2 p.m., Monday through Friday, except Federal holidays. The telephone number is (907) 225–4496.

FOR FURTHER INFORMATION CONTACT: Lieutenant Patrick W. Clark, Supervisor, U.S. Coast Guard, Marine Safety Detachment Ketchikan, (907) 225–4496.

SUPPLEMENTARY INFORMATION:

Regulatory History

A notice of proposed rulemaking (NPRM) was not published for this regulation. In keeping with requirements of 5 U.S.C. 553(B), the coast Guard finds that good cause exists for not publishing a NPRM. In keeping with requirements of 5 U.S.C. 553(d)(3), the Coast Guard also finds that good cause exists for making this regulation effective less than 30 days after publication in the **Federal Register.** Publication of a NPRM and delay of effective date would be contrary to the public interest because immediate action is necessary to protect the safety of the maritime vessel traffic.

Although this rule is being published as a temporary final rule without prior notice, an opportunity for public comment is nevertheless desirable to ensure the rule was both reasonable and workable. Accordingly, persons wishing to comment may do so by submitting comments to the office listed in **ADDRESSES** in this preamble. Persons submitting comments should include their names and addresses, identify this rulemaking (COTP Southeast Alaska 99–001) and the specific sections of this document to which each comment applies, and give the reason for each comment. The Coast Guard will consider all comments received and may modify future temporary final rules in view of the comments.

Background and Purpose

On April 1, 1999 at approximately 12:30 p.m. AST, Ketchikan Pulp Company will implode three of the facility's building. A 2000-foot radius safety zone is required around the demolition site to protect the maritime public from the hazards created by the activities being conducted in the area.

Regulatory Evaluation

This temporary final rule is not a significant regulatory action under section 3(f) of Executive Order 12866 and does not require an assessment of potential costs and benefits under section 6(a)(3) of that Order. It has been exempted from review by the Office of Management and Budget under that order. It is not significant under the regulatory policies and procedures of the Department of Transportation (DOT) (44 FR 11040; February 26, 1979). The

Coast Guard expects the economic impact of this proposal to be so minimal that a full Regulatory Evaluation under paragraph 10(e) of the regulatory policies and procedures of DOT is unnecessary.

Small Entities

Under the Regulatory Flexibility Act (5 U.S.C. 601 *et seq.*), the Coast Guard considered whether this rule will have a significant impact on a substantial number of small businesses and not-for-profit organizations that are not dominant in their respective fields, and governmental jurisdictions with populations less than 50,000. For the same reasons set forth in the above Regulatory Evaluation, the Coast Guard certifies under section 605(b) of the Regulatory Flexibility Act (5 U.S.C. 601 *et seq.*) that this temporary final rule will not have a significant economic impact on a substantial number of small entities.

Assistance for Small Entities

In accordance with sec. 213(a) of the Small Business Regulatory Enforcement Fairness Act of 1996 (Pub. L. 104–121), the Coast Guard wants to assist small entities in understanding this rule so that they can better evaluate its effectiveness in them and participate in the rulemaking process. If your small business or organization is affected by this rule and you have questions concerning its provisions or options for compliance, please contact the office listed in **ADDRESSES** in this preamble.

Collection of Information

This temporary final rule contains no information collection requirements under the Paperwork Reduction Act of 1995 (44 U.S.C. 3501 *et seq.*).

Federalism

The Coast Guard has analyzed this temporary final rule under the principals and criteria contained in Executive Order 12612 and has determined that this temporary final rules does not have sufficient implications for federalism to warrant the preparation of a Federalism Assessment.

Environment

The Coast Guard considered the environmental impact of this temporary final rule and concluded that, under figure 2–1, paragraph (34)(g), of Commandant Instruction M16475.1C, this temporary final rule is categorically excluded from further environmental documentation. A ''Categorical Exclusion Determination'' is available in the docket for inspection or copying where indicated under **ADDRESSES.**

List of Subjects in 33 CFR Part 165

Harbors, Marine safety, Navigation (water), Reporting and recordkeeping requirements, Security measures, Waterways.

For the reasons set out in the preamble, the Coast Guard amends 33 CFR Part 165 as follows:

PART 165—[AMENDED]

1. The authority citation for Part 165 continues to read as follows:

Authority: 33 U.S.C. 1231; 50 U.S.C. 191; 33 CFR 1.05–1(g), 6.04–1, 6.04–6, and 160.5; 49 CFR 1.46.

2. A new temporary section § 165.T17–SEAK–001 is added to read as follows:

§ 165.T17–SEAK–001 Safety Zone: Ward Cove, Tongass Narrows, Ketchikan Alaska.

(a) Location. The following area is a Safety Zone: The navigable waters of Ward Cove bounded by a line starting at the Southeast shoreline of Ward Cove at 55°23′58″ N, 131°43′37″ W, proceeding northwest to 55°24′ N, 131°44′13″ W, and all navigable waters inside Ward Cove to the east of the line.

(b) Effective dates. This regulation becomes effective at 9 a.m. AST, on April 1, 1999, and terminates at 12:01 a.m. ADT on April 15, 1999.

(c) Regulations. In accordance with the general regulations in § 165.23 of this part, entry into this safety zone is prohibited except as authorized by the captain of the Port.

Dated: March 16, 1999.

W. David Eley,

Commander, U.S. Coast Guard, Captain of the Port, Southeast Alaska.

[FR Doc. 99–8476 Filed 4–5–99; 8:45 am]

BILLING CODE 4910–15–M

DEPARTMENT OF TRANSPORTATION

Coast Guard

33 CFR Part 165

[CGD01–99–018]

RIN 2115–AA97

Safety Zone: Bergen County United Way Fireworks, Hudson River, Manhattan, NY

AGENCY: Coast Guard, DOT.

ACTION: Temporary final rule.

SUMMARY: The Coast Guard is establishing a temporary safety zone for the Bergen County United Way Fireworks program located on the Hudson River, Manhattan, New York. This action is necessary to provide for the safety of life on navigable waters during the event. This action is intended to restrict vessel traffic on a portion of the Hudson River.

DATES: This rule is effective from 9:30 p.m. until 11:00 p.m., on Sunday, April 11, 1999. For rain date, refer to the regulatory text set out in this rule.

ADDRESSES: Documents as indicated in this preamble are available for inspection or copying at Coast Guard Activities New York, 212 Coast Guard Drive, room 205, Staten Island, New York 10305, between 8 a.m. and 3 p.m., Monday through Friday, except Federal holidays. The telephone number is (718) 354–4193.

FOR FURTHER INFORMATION CONTACT: Lieutenant J. Lopez, Waterways Oversight Branch, Coast Guard Activities New York (718) 354–4193.

SUPPLEMENTARY INFORMATION:

Regulatory History

Pursuant to 5 U.S.C. 553, a notice of proposed rulemaking (NPRM) was not published for this regulation. Good cause exists for not publishing an NPRM and for making this regulation effective less than 30 days after **Federal Register** publication. Due to the date the Application for Approval of Marine Event was received, there was insufficient time to draft and publish an NPRM and publish the final rule 30 days before its effective date. Any delay encountered in this regulation's effective date would be contrary to public interest since immediate action is needed to close a portion of the waterway and protect the maritime public from the hazards associated with this fireworks display.

Background and Purpose

On February 24, 1999, Bay Fireworks submitted an application to hold a fireworks program on the waters of the Hudson River. The fireworks program is being sponsored by Bergen County United Way. This regulation establishes a safety zone in all waters of the Hudson River within a 360 yard radius of the fireworks barge located in approximate position 40°44′49″ N 074°01′02″ W (NAD 1983), approximately 500 yards west of Pier 60, Manhattan, New York. The safety zone is in effect from 9:30 p.m. until 11 p.m. on Saturday, April 10, 1999, with a rain date on Sunday, April 11, 1999, at the same time and place. The safety zone prevents vessels from transiting a portion of the Hudson River and is needed to protect boaters from the hazards associated with

fireworks launched from a barge in the area. Marine traffic will still be able to transit through the eastern 150 yards of the 850-yard wide Hudson River during the event. The Captain of the Port does not anticipate any negative impact on commercial traffic due to this event. Additionally, vessels are not precluded from mooring at or getting underway from Piers 59–62 or from the Piers at Castle Point, New Jersey. Public notifications will be made prior to the event via local notice to mariners, and marine information broadcasts.

Regulatory Evaluation

This final rule is not a significant regulatory action under section 3(f) of Executive Order 12866 and does not require an assessment of potential costs and benefits under section 6(a)(3) of that Order. It has not been reviewed by the Office of Management and Budget under that Order. It is not significant under the regulatory policies and procedures of the Department of Transportation (DOT) (44 FR 11040; February 26, 1979). The Coast Guard expects the economic impact of this final rule to be so minimal that a full Regulatory Evaluation under paragraph 10e of the regulatory policies and procedures of DOT is unnecessary. This finding is based on the minimal time that vessels will be restricted from the area, that vessels are not precluded from getting underway, or mooring at, Piers 59–62 and the Piers at Castle Point, New Jersey, that vessels may safely transit to the east of the zone, and extensive advance notifications which will be made.

Small Entities

Under the Regulatory Flexibility Act (5 U.S.C. 601 *et seq.*), the Coast Guard considered whether this rule will have a significant economic impact on a substantial number of small entities. ''Small entities'' include small businesses, not-for-profit organizations that are independently owned and operated and are not dominant in their fields, and governmental jurisdictions with populations of less than 50,000.

For reasons discussed in the Regulatory Evaluation above, the Coast Guard certifies under section 605(b) of the Regulatory Flexibility Act (5 U.S.C. 601 *et seq.*) that this final rule will not have a significance economic impact on a substantial number of small entities.

Collection of Information

This final rule does not provide for a collection of information under the Paperwork Reduction Act of 1995 (44 U.S.C. 3501 *et seq.*).

Federalism

The Coast Guard has analyzed this final rule under the principles and criteria contained in Executive Order 12612 and has determined that this final rule does not have sufficient implications for federalism to warrant the preparation of a Federalism Assessment.

Unfunded Mandates

Under the Unfunded Mandates Reform Act of 1995 (Pub. L. 104–4), the Coast Guard must consider whether this rule will result in an annual expenditure by state, local, and tribal governments, in the aggregate of $100 million (adjusted annually for inflation). If so, the Act requires that a reasonable number of regulatory alternatives be considered, and that from those alternatives, the least costly, most cost-effective, or least burdensome alternative that achieves the objective of the rule be selected. No state, local, or tribal government entities will be effected by this rule, so this rule will not result in annual or aggregate costs of $100 million or more. Therefore, the Coast Guard is exempt from any further regulatory requirements under the Unfunded Mandates Act.

Environment

The Coast Guard has considered the environmental impact of this final rule and concluded that under Figure 2–1, paragraph 34(g), of Commandant Instruction M16475.1C, this final rule is categorically excluded from further environmental documentation. A written Categorical Exclusion Determination is available in the docket for inspection in copying where indicated under **ADDRESSES.**

List of Subjects in 33 CFR Part 165

Harbors, Marine safety, Navigation (water), Reporting and recordkeeping requirements, Security measures, Waterways.

Regulation

For the reasons discussed in the preamble, the Coast Guard amends 33 CFR Part 165 as follows:

PART 165—[AMENDED]

1. The authority citation for Part 165 continues to read as follows:

Authority: 33 U.S.C. 1231; 50 U.S.C. 191; 33 CFR 1.05–1(g), 6.04–1, 6.04–6, and 160.5; 49 CFR 1.46.

2. Add temporary § 165.T01–018 to read as follows:

§ 165.T01–018 Safety Zone: Bergen County United Way Fireworks, Hudson River, Manhattan, New York.

(a) *Location.* The following area is a safety zone: all waters of the Hudson River within a 360 yard radius of the fireworks barge in approximate position 40°44′49″ N, 074°01′02″ W (NAD 1983), approximately 500 yards west of Pier 60, Manhattan, New York.

(b) *Effective period.* This section is effective from 9:30 p.m. until 11:00 p.m. on Saturday, April 10, 1999, with a rain date of Sunday, April 11, 1999, at the same time and place.

(c) *Regulations.*

(1) The general regulations contained in 33 CFR 165.23 apply.

(2) All persons and vessels shall comply with the instructions of the Coast Guard Captain of the Port or the designated on scene patrol personnel. U.S. Coast Guard patrol personnel include commissioned, warrant, and petty officers of the Coast Guard. Upon being hailed by a U.S. Coast Guard vessel via siren, radio, flashing light, or other means, the operator of a vessel shall proceed as directed.

Dated: March 22, 1999.

R.E. Bennis,

Captain, U.S. Coast Guard, Captain of the Port, New York.

[FR Doc. 99–8475 Filed 4–5–99; 8:45 am]

BILLING CODE 4910–15–M

ENVIRONMENTAL PROTECTION AGENCY

40 CFR Part 261

[SW–FRL–6320–4]

Hazardous Waste Management System; Identification and Listing of Hazardous Waste; Final Exclusion

AGENCY: Environmental Protection Agency.

ACTION: Final rule.

SUMMARY: The Environmental Protection Agency (EPA) today is granting a petition submitted by Aluminum Company of America (Alcoa), Pittsburgh, Pennsylvania, to exclude (or ''delist'') certain solid wastes generated by its wastewater treatment plant from the lists of hazardous wastes contained in subpart D of 40 CFR part 261. EPA has concluded that the petitioned waste is not a hazardous waste when disposed of in a subtitle D landfill. This exclusion applies only to the 16,772 cubic yards of wastewater treatment plant (WWTP) sludge present in the Stolle landfill. Today's action conditionally excludes the petitioned waste from the

requirements of the hazardous waste regulations under the Resource Conservation and Recovery Act (RCRA) only if the waste remains in place or, if excavated, it is disposed of in a subtitle D landfill which is permitted, licensed, or registered by a State to manage industrial solid waste.

EFFECTIVE DATE: April 6, 1999.

ADDRESSES: The RCRA regulatory docket for this proposed rule is located at the U.S. EPA Region 5, 77 W. Jackson Blvd., Chicago, IL 60604, and is available for viewing from 8:00 a.m. to 4:00 p.m., Monday through Friday, excluding Federal holidays. Call Peter Ramanauskas at (312) 886–7890 for appointments. The public may copy material from the regulatory docket at $0.15 per page.

FOR FURTHER INFORMATION CONTACT: For technical information concerning this document, contact Peter Ramanauskas at the address above or at (312) 886–7890.

SUPPLEMENTARY INFORMATION:

I. Background

A. Authority

Under §§ 260.20 and 260.22, facilities may petition the EPA to remove their wastes from hazardous waste control by excluding them from the lists of hazardous wastes contained in subpart D of part 261. Specifically, § 260.20 allows any person to petition the Administrator to modify or revoke any provision of parts 260 through 266, 268 and 273, and under § 260.22, which specifically provides generators the opportunity to petition the Administrator to exclude a waste on a ''generator-specific'' basis from the hazardous waste lists. Petitioners must provide sufficient information to allow EPA to determine that the waste to be excluded does not meet any of the criteria under which the waste was listed as a hazardous waste. In addition, where there is reasonable basis to believe that factors (including additional constituents) other than those for which the waste was listed could cause the waste to be a hazardous waste, the Administrator must determine that such factors do not warrant retaining the waste as a hazardous waste.

B. History of This Rulemaking

Alcoa petitioned EPA to exclude its WWTP sludge from hazardous waste control. After evaluating the petition, on December 21, 1998, EPA proposed to exclude Alcoa's waste from the lists of hazardous wastes in subpart D of part 261 (see 63 FR 70360). This rulemaking addresses the public comments received on the proposal and finalizes the proposed decision to grant Alcoa's petition.

II. Disposition of Delisting Petition

Aluminum Company of America, Alcoa Corporate Center, 201 Isabella Street, Pittsburgh, Pennsylvania 15212–5858

A. Proposed Exclusion

Alcoa petitioned EPA to exclude the estimated total volume of 16,772 cubic yards of WWTP filter press sludge previously disposed of in the Stolle landfill from the list of hazardous wastes contained in § 261.31 because it believed that the petitioned waste did not meet any of the criteria under which the waste was listed and that there were no additional constituents or factors that could cause the waste to be hazardous. Subsequently, Alcoa provided additional information to complete its petition. The WWTP filter cake sludge is listed as EPA Hazardous Waste Numbers F006 and F019. The listed constituents of concern for EPA Hazardous Waste Number F006 are cadmium, hexavalent chromium, nickel and cyanide (complexed) and for EPA Hazardous Waste Number F019 are hexavalent chromium and cyanide (complexed) (see appendix VII of part 261).

In support of its petition, Alcoa submitted detailed descriptions of its manufacturing and wastewater treatment processes, a schematic diagram of the wastewater treatment process, and analytical testing results for representative samples of the petitioned waste, including (1) the hazardous characteristics of ignitability, corrosivity, and reactivity; (2) total oil and grease; (3) Toxicity Characteristic Leaching Procedure (TCLP, SW–846 Method 1311) analyses for volatile and semi-volatile organic compounds, herbicides, pesticides, polychlorinated biphenyls (PCBs), metals, fluoride, and cyanide (using deionized water instead of acid); (4) total sulfide, total cyanide and total fluoride; and (5) total constituent analysis for 40 CFR part 264, appendix IX metals (plus hexavalent chromium for which F006 and F019 wastes are listed), VOCs, SVOCs, pesticides and herbicides, and PCBs.

EPA evaluated the information and analytical data provided by Alcoa and tentatively determined that Alcoa had successfully demonstrated that the petitioned waste is not hazardous. See the proposed exclusion (63 FR 70360; December 21, 1998) for a detailed explanation of EPA's evaluation.

B. Response to Comments

EPA received a public comment on the December 21, 1998 proposal from Chemical Products Corporation.

Comment: Commenter noted the absence of any published revision of the Toxicity Characteristic regulatory limit for barium, as the level for barium in the proposed exclusion exceeds the regulatory limit for barium in the Toxicity Characteristic (TC) Rule.

Response: The regulatory limit for barium under the TC rule has not been changed. The level of regulatory concern in the proposed rule was calculated using the EPA Composite Model for Landfills (EPACML). This level for barium, although protective of human health and the environment, has been lowered in today's final rule to comply with the levels set by the toxicity characteristic in § 261.24.

C. Changes to Proposed Conditions

In the proposed rulemaking, EPA included delisting levels for 12 constituents which would be protective of human health and the environment and which could not be exceeded in a TCLP extract of the petitioned waste. The proposed levels of 200 mg/l for barium and 10 mg/l for chromium have been lowered to the hazardous waste TC levels of 100 mg/l for barium and 5 mg/l for chromium to ensure that the petitioned waste, even though protective of human health and the environment, remains below the TC levels.

Levels in the proposed rule were based on ''Docket Report on Health-Based Levels and Solubilities Used in the Evaluation of Delisting Petitions,'' December 1994. This document was revised in May, 1996, and the health based levels for copper and vanadium were changed from 1.4 mg/l to 1.3 mg/l for copper and from 0.2 mg/l to 0.3 mg/l for vanadium. These new values were multiplied by the dilution/attenuation factor (DAF) generated using the EPACML to calculate the allowable constituent concentration levels.

In today's final rule, the allowable constituent concentrations measured in the TCLP extract may not exceed the following levels (mg/l): Arsenic—5; Barium—100; Chromium—5; Cobalt—210; Copper—130; Nickel—70; Vanadium—30; Zinc—1000; Fluoride—400; Acetone—400; Methylene Chloride—0.5; Bis(2-ethylhexyl)phthalate—0.6.

D. Final Agency Decision

For the reasons stated in both the proposal and this document, EPA has concluded that Alcoa's petitioned waste

may be excluded from hazardous waste control. EPA, therefore, is granting a final exclusion for the WWTP sludge. This exclusion applies to the waste described in the petition only if the requirements described in Table 1 of part 261, appendix IX are satisfied.

Although management of the waste covered by this exclusion is removed from subtitle C jurisdiction, this exclusion applies only if the waste remains in place or, if excavated, is disposed of in a subtitle D landfill which is permitted, licensed, or registered by a state to manage industrial solid waste.

III. Limited Effect of Federal Exclusion

The final exclusion being granted today is issued under the Federal (RCRA) delisting program. States, however, are allowed to impose (non-RCRA) regulatory requirements that are more stringent than EPA's, pursuant to section 3009 of RCRA. These more stringent requirements may include a provision which prohibits a Federally-issued exclusion from taking effect in the State. Because a petitioner's waste may be regulated under a dual system (i.e., both Federal (RCRA) and State (non-RCRA) programs), petitioners are urged to contact the State regulatory authority to determine the current status of their waste under State law.

Furthermore, some States are authorized to administer a delisting program in lieu of the Federal program (i.e., to make their own delisting decisions). Therefore, this exclusion does not apply in those authorized States. If the petitioned waste will be transported to any State with delisting authorization, Alcoa must obtain delisting authorization from that State before the waste may be managed as nonhazardous in the State.

IV. Effective Date

This rule is effective April 6, 1999. The Hazardous and Solid Waste Amendments of 1984 amended section 3010 of RCRA to allow rules to become effective in less than six months when the regulated community does not need the six-month period to come into compliance. That is the case here, because this rule reduces the existing requirements for persons generating hazardous wastes. These reasons also provide a basis for making this rule effective immediately, upon publication, under the Administrative Procedure Act, 5 U.S.C. 553(d).

V. Regulatory Impact

Under Executive Order 12866, (58 FR 51735 (October 4, 1993)) the Agency must determine whether the regulatory action is ''significant'' and therefore subject to OMB review and the requirements of the Executive Order. The Order defines ''significant regulatory action'' as one that is likely to result in a rule that may: (1) Have an annual effect on the economy of $100 million or more or adversely affect, in a material way the economy, a sector of the economy, productivity, competition, jobs, the environment, public health or safety, or State, local, or tribal governments or communities; (2) create a serious inconsistency or otherwise interfere with an action taken or planned by another agency; (3) materially alter the budgetary impact of entitlements, grants, user fees, or loan programs, or the rights and obligations of recipients thereof, or; (4) raise novel legal or policy issues arising out of legal mandates, the President's priorities, or the principles set forth in the Executive Order.

It has been determined that this rule is not a ''significant regulatory action'' under the terms of Executive Order 12866 and is therefore not subject to OMB review.

VI. Regulatory Flexibility Act

Pursuant to the Regulatory Flexibility Act, 5 U.S.C. 601–612, whenever an agency is required to publish a general notice of rulemaking for any proposed or final rule, it must prepare and make available for public comment a regulatory flexibility analysis that describes the impact of the rule on small entities (i.e., small businesses, small organizations, and small governmental jurisdictions). No regulatory flexibility analysis is required, however, if the Administrator or delegated representative certifies that the rule will not have any impact on any small entities.

This rule will not have an adverse economic impact on any small entities since its effect would be to reduce the overall costs of EPA's hazardous waste regulations. Accordingly, I hereby certify that this regulation will not have a significant economic impact on a substantial number of small entities. This regulation, therefore, does not require a regulatory flexibility analysis.

VII. Paperwork Reduction Act

Information collection and recordkeeping requirements associated with this final rule have been approved by OMB under the provisions of the Paperwork Reduction Act of 1980 (Public Law 96–511, 44 U.S.C. 3501 *et seq.*) and have been assigned OMB Control Number 2050–0053.

VIII. Unfunded Mandates Reform Act

Under section 202 of the Unfunded Mandates Reform Act of 1995 (UMRA), Public Law 104–4, which was signed into law on March 22, 1995, EPA generally must prepare a written statement for rules with Federal mandates that may result in estimated costs to State, local, and tribal governments in the aggregate, or to the private sector, of $100 million or more in any one year. When such a statement is required for EPA rules, under section 205 of the UMRA, EPA must identify and consider alternatives, including the least costly, most cost-effective or least burdensome alternative that achieves the objectives of the rule. EPA must select that alternative, unless the Administrator explains in the final rule why it was not selected or it is inconsistent with law. Before EPA establishes regulatory requirements that may significantly or uniquely affect small governments, including tribal governments, it must develop under section 203 of the UMRA a small government agency plan. The plan must provide for notifying potentially affected small governments, giving them meaningful and timely input in the development of EPA regulatory proposals with significant Federal intergovernmental mandates, and informing, educating, and advising them on compliance with the regulatory requirements. The UMRA generally defines a Federal mandate for regulatory purposes as one that imposes an enforceable duty upon State, local or tribal governments or the private sector. EPA finds that today's delisting decision is deregulatory in nature and does not impose any enforceable duty upon State, local or tribal governments or the private sector. In addition, today's delisting decision does not establish any regulatory requirements for small governments and so does not require a small government agency plan under UMRA section 203.

IX. Submission to Congress and General Accounting Office

The Congressional Review Act, 5 U.S.C. 801 *et seq.*, as added by the Small Business Regulatory Enforcement Fairness Act of 1996, generally provides that before a rule may take effect, the agency promulgating the rule must submit a rule report, which includes a copy of the rule, to each House of Congress and to the Comptroller General of the United States. EPA is not required to submit a rule report regarding today's action under section 801 because this is a rule of particular applicability. Section 804 exempts from section 801 the

following types of rules: rules of particular applicability; rules relating to agency management or personnel; and rules of agency organization, procedure, or practice that do not substantially affect the rights or obligations of non-agency parties. 5 U.S.C. 804(3).

X. Executive Order 13045—Protection of Children From Environmental Health Risks and Safety Risks

The E.O. 13045 is entitled ''Protection of Children from Environmental Health Risks and Safety Risks'' (62 FR 19885, April 23, 1997). This order applies to any rule that EPA determines: (1) is economically significant as defined under Executive Order 12866, and (2) the environmental health or safety risk addressed by the rule has a disproportionate effect on children. If the regulatory action meets both criteria, the Agency must evaluate the environmental health or safety effects of the planned rule on children, and explain why the planned regulation is preferable to other potentially effective and reasonably feasible alternatives considered by the Agency. This final rule is not subject to E.O. 13045 because this is not an economically significant regulatory action as defined by E.O. 12866.

XI. Executive Order 12875

Under E.O. 12875, EPA may not issue a regulation that is not required by statute and that creates a mandate upon a state, local, or tribal government, unless the Federal government provides the funds necessary to pay the direct compliance costs incurred by those governments. If the mandate is unfunded, EPA must provide to the Office of Management and Budget a description of the extent of EPA's prior consultation with representatives of affected state, local, and tribal governments, the nature of their concerns, copies of written communications from the governments, and a statement supporting the need to issue the regulation. In addition, E.O. 12875 requires EPA to develop an effective process permitting elected officials and other representatives of state, local, and tribal governments ''to provide meaningful and timely input in the development of regulatory proposals containing significant unfunded mandates.'' Today's rule does not create a mandate on state, local or tribal governments. The rule does not impose any enforceable duties on these entities. Accordingly, the requirements of section 1(a) of E.O. 12875 do not apply to this rule.

XII. Executive Order 13084

Under E.O. 13084, EPA may not issue a regulation that is not required by statute, that significantly affects or uniquely affects the communities of Indian tribal governments, and that imposes substantial direct compliance costs on those communities, unless the Federal government provides the funds necessary to pay the direct compliance costs incurred by the tribal governments. If the mandate is unfunded, EPA must provide to the Office of Management and Budget, in a separately identified section of the preamble to the rule, a description of the extent of EPA's prior consultation with representatives of affected tribal governments, a summary of the nature of their concerns, and a statement supporting the need to issue the regulation. In addition, E.O. 13084 requires EPA to develop an effective process permitting representatives of Indian tribal governments ''to provide meaningful and timely input in the development of regulatory policies on matters that significantly or uniquely affect their communities.'' Today's rule does not significantly or uniquely affect the communities of Indian tribal governments. Accordingly, the requirements of section 3(b) of E.O. 13084 do not apply to this rule.

XIII. The National Technology Transfer and Advancement Act

Section 12(d) of the National Technology Transfer and Advancement Act of 1995 (NTTAA), Public Law 104–113, 12(d) (15 U.S.C. 272 note) directs EPA to use voluntary consensus standards in its regulatory activities unless to do so would be inconsistent with applicable law or otherwise impractical. Voluntary consensus standards are technical standards (e.g., materials specifications, test methods, sampling procedures, and business practices) that are developed or adopted by voluntary consensus standards bodies. The NTTAA directs EPA to provide Congress, through OMB, explanations when the Agency decides not to use available and applicable voluntary consensus standards.

This rulemaking does not establish any new technical standards and thus, the Agency has no need to consider the use of voluntary consensus standards in developing this final rule.

List of Subjects in 40 CFR Part 261

Environmental protection, Hazardous waste, Recycling, and Reporting and recordkeeping requirements.

Authority: Sec. 3001(f) RCRA, 42 U.S.C. 6921(f).

Dated: March 16, 1999.

Robert Springer,

Director, Waste, Pesticides and Toxics Division.

For the reasons set out in the preamble, 40 CFR part 261 is amended as follows:

PART 261—IDENTIFICATION AND LISTING OF HAZARDOUS WASTE

1. The authority citation for Part 261 continues to read as follows:

Authority: 42 U.S.C. 6905, 6912(a), 6921, 6922, and 6938.

2. In Table 1 of Appendix IX of Part 261 add the following waste stream in alphabetical order by facility to read as follows:

Appendix IX to Part 261—Wastes Excluded Under §§ 260.20 and 260.22

TABLE 1.—WASTES EXCLUDED FROM NON-SPECIFIC SOURCES

Facility	Address	Waste description
Aluminum Company of America	750 Norcold Ave., Sidney, Ohio 45365.	Wastewater treatment plant (WWTP) sludges generated from the chemical conversion coating of aluminum (EPA Hazardous Waste No. F019) and WWTP sludges generated from electroplating operations (EPA Hazardous Waste No. F006) and stored in an on-site landfill. This is an exclusion for approximately 16,772 cubic yards of landfilled WWTP filter cake. This exclusion applies only if the waste filter cake remains in place or, if excavated, is disposed of in a Subtitle D landfill which is permitted, licensed, or registered by a state to manage industrial solid waste. This exclusion was published on April 6, 1999. 1. The constituent concentrations measured in the TCLP extract may not exceed the following levels (mg/L): Arsenic—5; Barium—100; Chromium—5; Cobalt—210; Copper—130; Nickel—70; Vanadium—30; Zinc—1000; Fluoride—400; Acetone—400; Methylene Chloride—0.5; Bis(2-ethylhexyl)phthalate—0.6. 2. (a) If, anytime after disposal of the delisted waste, Alcoa possesses or is otherwise made aware of any environmental data (including but not limited to leachate data or groundwater monitoring data) or any other data relevant to the delisted waste indicating that any constituent identified in Condition (1) is at a level in the leachate higher than the delisting level established in Condition (1), or is at a level in the ground water or soil higher than the health based level, then Alcoa must report such data, in writing, to the Regional Administrator within 10 days of first possessing or being made aware of that data. (b) Based on the information described in paragraph (a) and any other information received from any source, the Regional Administrator will make a preliminary determination as to whether the reported information requires Agency action to protect human health or the environment. Further action may include suspending or revoking this exclusion, or other appropriate response necessary to protect human health and the environment. (c) If the Regional Administrator determines that the reported information does require Agency action, the Regional Administrator will notify the facility in writing of the actions the Regional Administrator believes are necessary to protect human health and the environment. The notice shall include a statement of the proposed action and a statement providing the facility with an opportunity to present information as to why the proposed Agency action is not necessary or to suggest an alternative action. The facility shall have 10 days from the date of the Regional Administrator's notice to present such information. (d) Following the receipt of information from the facility described in paragraph (c) or (if no information is presented under paragraph (c) the initial receipt of information described in paragraph (a), the Regional Administrator will issue a final written determination describing the Agency actions that are necessary to protect human health or the environment. Any required action described in the Regional Administrator's determination shall become effective immediately, unless the Regional Administrator provides otherwise.

* * * * * * *

[FR Doc. 99–8480 Filed 4–5–99; 8:45 am]
BILLING CODE 6560–50–P

AGENCY FOR INTERNATIONAL DEVELOPMENT

48 CFR Parts 701, 703, 715, 731, and 752

[AIDAR Notice 98–1]

Miscellaneous Amendments to Acquisition Regulations

AGENCY: Internatinal Development Cooperation Agency, United States Agency for International Development.

ACTION: Final rule.

SUMMARY: The U.S. Agency for International Development (USAID) is amending the USAID Acquisition Regulation (AIDAR) to make various administrative modifications in accordance with the changes to Part 15 of the Federal Acquisition Regulation published in Federal Acquisition Circular 97–02, to designate an additional level for concurrence before the Contracting Officer confers with the Head of Contracting Activity on matters concerning procurement integrity violations or other possible violations, and to add coverage on payment of

salary supplements for Host Government employees.

EFFECTIVE DATE: May 6, 1999.

FOR FURTHER INFORMATION CONTACT: M/OP/P, Ms. Kathleen O'Hara, Room 7.08–92, 1300 Pennsylvania Ave., N.W., U.S. Agency for International Development, Washington, D.C. 20523–7801. Telephone: (202) 712–4759.

SUPPLEMENTARY INFORMATION: The AIDAR is being amended to make various administrative changes to conform with revised Part 15 of the Federal Acquisition Regulation published in Federal Acquisition Circular 97–02. This Notice updates the expiration dates of the Office of Management and Budget (OMB) approval under the Paperwork Reduction Act. This Notice also adds an additional level for concurrence before the Contracting Officer confers with the Head of Contracting Activity on matters concerning procurement integrity violations or other possible violations. Allowing for concurrence by the person who is one above the Contacting Officer simplifies the procedure to release information. Finally, this Notice adds coverage in Part 731 and a clause which, in accordance with USAID policy, provides that salary supplements for host government employees are not allowable costs without approval. This implements long standing Agency policy.

The changes made by this Notice are mostly administrative and not considered major rules as defined in E.O. 12866. This Notice will neither impact a substantial number of small entities, nor will it establish information collection as contemplated by the Regulatory Flexibility Act and the Paperwork Reduction Act. Because of the nature of this Notice, use of the proposed rule/public comment approach was not considered necessary. USAID decided to issue this Notice as a final rule; however, the Agency welcomes public comment on the material covered by this Notice or any part of the AIDAR at any time. Comments or questions may be addressed as specified in the **FOR FURTHER INFORMATION CONTACT** section of the preamble.

List of Subjects in 48 CFR Parts 701, 703, 715, 731, and 752

Government procurement.

Accordingly for the reasons set out in the Preamble, 48 CFR Chapter 7 is amended as follows:

1. The authority citations in Parts 701, 703, 715, 731, and 752 continue to read as follows:

Authority: Sec. 621, Pub. L. 87–195, Stat. 445 (22 U.S.C. 2381), as amended; E.O. 12163, Sept. 29, 1979, 44 FR 56673, CFR 1979 Comp., p. 435.

PART 701—FEDERAL ACQUISITION REGULATION SYSTEM

Subpart 701.1—Purposes, Authority, Issuance

701.105 [Amended]

2. Section 701.105 is amended by removing ''06/30/97'' everywhere it appears in paragraph (a) and adding ''08/31/2000'' in its place and by revising paragraph (c) to read as follows:

701.105 OMB approval under the Paperwork Reduction Act.

* * * * *

(c) Public reporting burden for these collections of information is estimated as shown in paragraph (a) of this section. The estimated burden includes the time for reviewing instructions, searching existing data sources, gathering and maintaining the data needed, and completing and reviewing the collection of information. Send comments regarding the burden estimates or any other aspects of these collections of information, including suggestions for reducing the burden, to: U.S. Agency for International (USAID), Office of Procurement, Policy Division (M/OP/P), Room 7.08–082U, 1300 Pennsylvania Avenue, N.W. Washington, D.C. 20523–7801; and Office of Management and Budget (OMB), Paperwork Reduction Project (0412–0520), Washington, D.C. 20503.

PART 703—IMPROPER BUSINESS PRACTICES AND PERSONAL CONFLICTS OF INTEREST

Subpart 703.1—Safeguards

703.104 [Amended]

3. Section 703.104–5 is revised to read as follows:

703.104 Disclosure, protection, and marking of proprietary and source information.

A Contracting Office may authorize release of proprietary and/or source selection information outside the Government for evaluation purposes pursuant to FAR 15.305(c) and (AIDAR) 48 CFR 715.305(c).

4. Section 703.104–10 is added to read as follows:

703.104–10.1 Violations or possible violations.

Requests for concurrence under paragraph (a)(1) of FAR 3.104–10 shall be forwarded to one level above the Contracting Officer.

PART 715—CONTRACTING BY NEGOTIATION

5. Part 715 is amended by removing Subpart 715.4, Solicitation and Receipt of Proposals and Quotations; by redesignating Subpart 715.6, Source Selections, as Subpart 715.3; and redesignating Subpart 715.5, Unsolicited Proposals, as Subpart 715.6; by redesignating 715.502 as 715.602, 715.504 as 715.604, 715.604–70 as 715.303–70, 716.613–70 as 715.370–, and 715.613–71 as 715.370–2; and by removing 715.506, 715.506–1, and 715.605.

6. In newly designated 715.303–70, paragraph (b)(3) is revised to read as follows:

715.303–70 Responsibilities of USAID evaluation committees.

* * * * *

(b) * * *

(3) The chair shall prepare and provide to the Contracting Officer written documentation summarizing the results of the evaluation of each proposal, including an assessment of past performance information in accordance with FAR 15.305(a)(2). The documentation shall include narrative justification of the evaluation results.

* * * * *

715.305 [Added]

7. Section 715.305 is added to read as follows:

715.305 Proposal evaluation.

(a) [Reserved]

(b) A justification is to be written by the Contracting Officer and placed in the official file to support the decision to reject all proposals and to cancel the procurement.

(c) The Contracting Office may authorized release of proposals outside the Government for evaluation—

(1) When an Evaluation Assistance Contract (EAC) is required to provide technical advisory or other services relating to the evaluation of proposals; or

(2) When an individual other than a government employee, known as a Non-Government Evaluator (NGE), is selected to serve as a member of a USAID technical evaluation committee, the Contracting Officer shall obtain a signed and dated certification and agreement from each NGE and EAC that they will safeguard the proposals and information therein and that they perceive no actual or potential conflict of interests. (An acceptable certification appears under ADS Chapter 302).

715.370 [Added]

8. Section 715.370 is added to read as follows:

715.370 Alternative source selection procedures.

The following selection procedures may be used, when appropriate, for activities covered under Title XII of the Foreign Assistance Act of 1961, as amended.

9. Newly redesignated 715.602 is amended by revising paragraphs (b) and (c) to read as follows:

715.602 Policy.

* * * * *

(B) USAID's basic policies and procedures regarding unsolicited proposals are those established in FAR subpart 15.6 and this subpart.

(c) For detailed information on unsolicited proposals, see 715.604; for initial contact point within USAID, see 715.604(c).

10. Newly redesignated 715.604 is amended by revising the section heading and paragraph (a) and adding paragraph (c) to read as follows:

715.604 Agency points of contact.

(a) Information concerning USAID's policies for unsolicited proposals is available from the U.S. Agency for International Development, Evaluation Division, Room 7.08–005, 1300 Pennsylvania Avenue, NW, Washington, D.C. 20523–7803.

* * * * *

(c) Initial inquiries and subsequent unsolicited proposals should be submitted to the address specified in paragraph (a) of this section.

PART 731—CONTRACT COST PRINCIPLES AND PROCEDURES

Subpart 731.2—Contracts With Commercial Organizations

731.205–71 [Added]

11. Section 731.205–71 is added as follows:

731.205–71 Salary supplements for Host Government employees.

(a) *Definitions.* (1) A Host Government (HG) employee is a person paid by the HG, occupying an established position, either temporary or permanent, part-time or full-time, within a HG institution.

(2) An HG institution is an organization in which the government owns at least a fifty percent share or receives at least fifty percent of its financial support from the government.

(b) *General.* Salary supplement occurs when payments are made that augment an HG employee's base salary or premiums, overtime, extra payments, incentive payment and allowances for which the HG employee would qualify under HG rules or practices for the performance of his/hers regular duties or work performed during his/hers regular office hours. Per diem, invitational travel, honoraria and payment for work carried out outside of normal working hours are not considered to be salary supplements subject to the provisions in USAID policy referenced in paragraph (c) of this section.

(c) Salary supplements are eligible for USAID financing only when authorized in accordance with USAID policy established in the cable State 119780 dated April 15, 1988 (on ADS–CD under USAID Handbooks, Handbook 1). If salary supplements have been authorized in a particular case, the Contracting Officer shall provide written approval to the contractor in order for such costs to be eligible. Any specific requirements or limitations shall be specified in the approval.

(d) Contracting Officers shall insert the Clause at 752.231–71 in all contracts in which there is a possibility of the need of HG employees. It should also be inserted in all subsequent subcontracts.

PART 752—SOLICITATION PROVISIONS AND CONTRACT CLAUSES

Subpart 752.2—Texts of Provisions and Clauses

12. Section 752.231–71 is added to read as follows:

752.231–71 Salary supplements for HG employees.

As prescribed in 731.205–71, for use in all contracts with a possible need or services of a HG employee. The clause should also be inserted in all subsequent sub-contracts.

SALARY SUPPLEMENTS FOR HG EMPLOYEES (OCT 1998)

(a) Salary supplements are payments made that augment an employee's base salary or premiums, overtime, extra payments, incentive payment and allowances for which the HG employee would qualify under HG rules or practice for the performance of his/hers regular duties or work performed during his/hers regular office hours. Per diem, invitational travel, honoraria and payment for work carried out outside of normal working hours are not considered to be salary supplements.

(b) Salary supplements to HG Employees are not allowable without the written approval of the Contracting Officer.

Dated: March 8, 1999.

Marcus L. Stevenson,

Procurement Executive.

[FR Doc. 99–6609 Filed 4–5–99; 8:45 am]

BILLING CODE 6116–01–M

DEPARTMENT OF ENERGY

48 CFR Parts 909 and 970

RIN 1991–AB44

Acquisition Regulations; Performance Guarantees

AGENCY: Department of Energy.

ACTION: Final rule.

SUMMARY: The Department of Energy (DOE) is amending its acquisition regulations to formally require a performance guarantee under circumstances where a prospective awardee has been created solely for the performance of the instant contract and lacks sufficient financial or other resources to fulfill its obligations under the prospective contract. In circumstances where the newly created entity likely will be dependent upon the resources of the parent organization, this rule allows Contracting Officers to consider the resources of the parent in a determination of the newly created entity's responsibility only when the parent provides a performance guarantee or other undertaking satisfactory to the Contracting Officer. While this situation occurs most often in the award of contracts for the management and operation of DOE facilities, this rule makes a form of performance guarantee necessary whenever these circumstances are encountered.

EFFECTIVE DATE: This rule will take effect May 6, 1999.

FOR FURTHER INFORMATION CONTACT: Robert M. Webb, U.S. Department of Energy, Office of Procurement and Assistance Management, 1000 Independence Avenue, SW, Washington, DC 20585, (202) 586–8264.

SUPPLEMENTARY INFORMATION:

I. Background.
II. Resolution of Comment.
III. Procedural Requirements.
A. Review Under Executive Order 12866.
B. Review Under Executive Order 12988.
C. Review Under the Regulatory Flexibility Act.
D. Review Under the Paperwork Reduction Act.
E. Review Under the National Environmental Policy Act.
F. Review Under Executive Order 12612.
G. Review Under Small Business Regulatory Enforcement Fairness Act of 1996.

H. Review Under the Unfunded Mandates Reform Act of 1995.

I. Background

The Department of Energy in certain cases requires that the contractor be a corporate entity organized specifically for the performance of the contract at a specific DOE site. This requirement occurs regularly in the award of management and operating contracts and is intended (1) to assure the dedication of the contractor to the performance of the contract; (2) to limit involvement of the Department with the corporate parent; (3) to isolate the contractor from the parent for purposes of security and classification matters; (4) to limit the flow of information between the contractor and its parent, limiting a potential source of organizational conflict of interest; (5) to isolate the accounting system of the contractor, since often the budget and accounting systems of such contractors are integrated into DOE's budget and accounting systems; and (6) to limit the necessity of corporate support thereby reducing or negating a basis for charging general and administrative expense to the contract.

Such dedicated contractors, however, generally have limited assets. In most cases, without consideration of the corporate assets of the parent entity(ies), the DOE Contracting Officer would not be able to make a determination that the contractor was financially responsible and had sufficient resources available to assure successful performance of the contract.

It has been a common practice of the Department in such instances for the parent entity(ies) to provide some form of guarantee of performance. While there are other means for the parent to guarantee the subsidiary's fulfillment of all its contractual obligations, such as an unconditional letter of credit, the most appropriate means under these circumstances is a contractually binding performance guarantee. This rulemaking incorporates the requirement for a performance guarantee (or, where appropriate, equivalent enforceable commitment) into the Department of Energy Acquisition Regulation.

The proposed rule was published in the **Federal Register** on November 9, 1998 (63 FR 60268).

II. Resolution of Comment

One comment was received in response to the proposed rule. It suggests that the solicitation provision be modified to state affirmatively that the performance guarantee is not intended to create third party beneficiary status in any third party. The comment further states that DOE recognizes this issue in the model performance guarantee provided in other DOE guidance. The commenter seems to believe that the solicitation provision is intended to be included in the contract. That is not the case. DOE has chosen not to make the suggested change since statements made in solicitation are generally not binding after contract award, and the solicitation provision is intended only to put prospective offerors on notice of the requirement for a performance guarantee acceptable as a condition of award and will not, itself, become part of the contract.

The solicitation notice as published in the proposed rule contained a second paragraph putting prospective offerors on notice that if a proposal is submitted by multiple entities, a performance guarantee must be executed by each, making each jointly and severally liable. We have deleted this paragraph from the notice. It is unnecessary because the same requirement is discussed at both 909.104–3(e) and 970.0902(b) of this rule, and the notice states that the performance guarantee(s) must be to DOE's satisfaction.

III. Procedural Requirements

A. Review Under Executive Order 12866

Today's regulatory action has been determined not to be a ''significant regulatory action'' under Executive Order 12866, ''Regulatory Planning and Review,'' (58 FR 51735, October 4, 1993). Accordingly, this final rule was not subject to review under that Executive Order by the Office of Information and Regulatory Affairs of the Office of Management and Budget (OMB).

B. Review Under Executive Order 12988

With respect to the review of existing regulations and the promulgation of new regulations, section 3(a) of Executive Order 12988, ''Civil Justice Reform,'' 61 FR 4729 (February 7, 1996), imposes on Executive agencies the general duty to adhere to the following requirements: (1) Eliminate drafting errors and ambiguity; (2) write regulations to minimize litigation; and (3) provide a clear legal standard for affected conduct rather than a general standard and promote simplification and burden reduction. With regard to the review required by section 3(a), section 3(b) of Executive Order 12988 specifically requires that Executive agencies make every reasonable effort to ensure that the regulation: (1) Clearly specifies the preemptive effect, if any; (2) clearly specifies any effect on existing Federal law or regulation; (3) provides a clear legal standard for affected conduct while promoting simplification and burden reduction; (4) specifies the retroactive effect, if any; (5) adequately defines key terms; and (6) addresses other important issues affecting clarity and general draftsmanship under any guidelines issued by the Attorney General. Section 3(c) of Executive Order 12988 requires Executive agencies to review regulations in light of applicable standards in section 3(a) and section 3(b) to determine whether they are met or it is unreasonable to meet one or more of them. DOE has completed the required review and determined that, to the extent permitted by law, these regulations meet the relevant standards of Executive Order 12988.

C. Review Under the Regulatory Flexibility Act

This final rule has been reviewed under the Regulatory Flexibility Act 5 U.S.C. 601, *et seq.*, which requires preparation of an initial regulatory flexibility analysis for any rule that must be proposed for public comment and that is likely to have significant economic impact on a substantial number of small entities. The contracts to which this rulemaking apply involve award to newly formed subsidiaries organized by a parent corporations to perform specific DOE contracts. In such instances, the parent will be required to guarantee the performance of the subsidiary. There would not be an adverse economic impact on contractors or subcontractors. In addition, DOE management and operating contractors historically have not been small entities. Accordingly, DOE certifies that this final rule would not have a significant economic impact on a substantial number of small entities, and, therefore, no regulatory flexibility analysis has been prepared.

D. Review Under the Paperwork Reduction Act

No additional information or record keeping requirements are imposed by this rulemaking. Accordingly, no OMB clearance is required under the Paperwork Reduction Act (44 U.S.C. 3501 *et seq.*).

E. Review Under the National Environmental Policy Act

DOE has concluded that promulgation of this final rule falls into a class of actions which would not individually or cumulatively have significant impact on the human environment, as determined by DOE's regulations (10 CFR part 1021, subpart D) implementing the National

Environmental Policy Act (NEPA) of 1969 (42 U.S.C. 4321 *et seq.*). Specifically, this final rule is categorically excluded from NEPA review because the amendments to the DEAR would be strictly procedural (categorical exclusion A6). Therefore, this final rule does not require an environmental impact statement or environmental assessment pursuant to NEPA.

F. Review Under Executive Order 12612

Executive Order 12612, (52 FR 41685, October 30, 1987), requires that regulations, rules, legislation, and any other policy actions be reviewed for any substantial direct effects on States, on the relationship between the Federal Government and the States, or in the distribution of power and responsibilities among the various levels of Government. If there are sufficient substantial direct effects, then the Executive Order requires the preparation of a federalism assessment to be used in all decisions involved in promulgating and implementing a policy action. This final rule merely reflects current practice relating to determinations of responsibility. States which contract with DOE will be subject to this rule. However, DOE has determined that this rule would not have a substantial direct effect on the institutional interests or traditional functions of the States.

G. Review Under Small Business Regulatory Enforcement Fairness Act of 1996

As required by 5 U.S.C. 801, DOE will report to Congress promulgation of the rule prior to its effective date. The report will state that it has been determined that this final rule is not a ''major rule'' as defined by 5 U.S.C. 804(3).

H. Review Under the Unfunded Mandates Reform Act of 1995

The Unfunded Mandates Reform Act of 1995 (Pub. L. 104–4) generally requires a Federal agency to perform a detailed assessment of costs and benefits of any rule imposing a Federal Mandate with costs to State, local or tribal governments, or to the private sector, of $100 million or more. This final rulemaking would only affect private sector entities, and the impact is less than $100 million.

List of Subjects in 48 CFR Parts 909 and 970

Government procurement.

Issued in Washington, D.C. on March 30, 1999.

Richard H. Hopf,

Director, Office of Procurement and Assistance Management.

For the reasons set out in the preamble, Chapter 9 of Title 48 of the Code of Federal Regulations is amended as set forth below.

PART 909—CONTRACTOR QUALIFICATIONS

1. The authority citation for Part 909 continues to read as follows:

Authority: 42 U.S.C. 7254; 40 U.S.C. 486(c).

2. Subsection 909.104–3 is added as follows:

909.104–3 Application of standards. (DOE coverage-paragraph (e))

(e) DOE may select an entity which was newly created to perform the prospective contract, including, but not limited to, a joint venture or other similarly binding corporate partnership. In such instances when making the determination of responsibility pursuant to 48 CFR 9.103, the contracting officer may evaluate the financial resources of other entities only to the extent that those entities are legally bound, jointly and severally if more than one, by means of a performance guarantee or other equivalent enforceable commitment to supply the necessary resources to the prospective contractor and to assume all contractual obligations of the prospective contractor. The guaranteeing corporate entity(ies) must be found to have sufficient resources in order to satisfy its guarantee.

PART 970—DOE MANAGEMENT AND OPERATING CONTRACTS

3. The authority citation for Part 970 continues to read:

Authority: Sec. 161 of the Atomic Energy Act of 1954 (42 U.S.C. 2201), sec. 644 of the Department of Energy Organization Act, Pub.L. 95–91 (42 U.S.C. 7254).

4. Section 970.0902 is added as follows:

970.0902 Determination of responsibility.

(a) In the award of a management and operating contract, the contracting officer shall determine that the prospective contractor is a responsible contractor and is capable of providing all necessary financial, personnel, and other resources in performance of the contract.

(b) DOE contracts with entities that have been created solely for the purpose of performing a specific management and operating contract. Such a newly created entity generally will have very limited financial and other resources. In such instances, when making the determination of responsibility required under this section, the contracting officer may evaluate the financial resources of other entities only to the extent that those entities are legally bound, jointly and severally if more than one, by means of a performance guarantee or other equivalent enforceable commitment to supply the necessary resources to the prospective contractor and to assume all contractual obligations of the prospective contractor. A performance guarantee should be the means used unless an equivalent degree of commitment can be obtained by an alternative means.

(c) The guaranteeing corporate entity(ies) must be found to have sufficient resources in order to satisfy its guarantee.

(d) Contracting officers shall insert the provision at 970.5204–89 in solicitations where the awardee is required to be organized solely for performance of the requirement.

5. Section 970.5204–89 is added as follows:

970.5204–89 Requirement for guarantee of performance.

In accordance with 970.0902(d), insert the following provision in appropriate solicitations.

Requirement for Guarantee of Performance (APR 1999)

The successful proposer is required by other provisions of this solicitation to organize a dedicated corporate entity to carry out the work under the contract to be awarded as a result of this solicitation. The successful proposer will be required, as part of the determination of responsibility of the newly organized, dedicated corporate entity and as a condition of the award of the contract to that entity, to furnish a guarantee of that entity's performance. That guarantee of performance must be satisfactory in all respects to the Department of Energy.

[FR Doc. 99–8454 Filed 4–5–99; 8:45 am]

BILLING CODE 6450–01–P

DEPARTMENT OF COMMERCE

48 CFR Part 1333

[Docket No. 990127035–9035–01]

RIN 0605–AA15

Commerce Acquisition Regulation; Agency Protest Procedures

AGENCY: Department of Commerce.

ACTION: Final rule.

SUMMARY: The Department of Commerce amends the Commerce Acquisition

Regulation (CAR) to implement the requirements of Executive Order 12979 and the Federal Acquisition Regulation (FAR) Part 33, Section 103, to include ''Agency Protest Procedures-Level Above the Contracting Officer.'' The Department of Commerce has an urgent need to publish its final rule stating the policy governing protests at the level above the Contracting Officer. These rules are currently being used by all Department of Commerce contracting activities. Accordingly, they provide uniform policy and procedures governing the filing and disposition of all pre award and post award agency protests of contracting actions at the level above the Contracting Officer. It should be emphasized, however, that the current rules and procedures pertaining to ordinary agency protests filed directly with the Contracting Officer remain in effect. These provisions include establishment of the protest decision authority for all Agency protests filed at the level above the Contracting Officer, the election of forum, the procedures for filing such protests, the minimal filing contents for a valid protest of this type, procedures for the protest disposition, the effects of protest filing on contract awards, and potential remedies available for resolution of these protests. These rules have been designed to create an additional avenue for resolving third party grievances in connection with the acquisition process and to avoid resolving these types of disputes through formal judicial processes.

EFFECTIVE DATE: This final rule is effective May 6, 1999.

FOR FURTHER INFORMATION CONTACT: Ms. Lisa Jandovitz, Director, Policy, Office of Acquisition Management, 202–482–0202.

SUPPLEMENTARY INFORMATION: This rule implements the requirements of Executive Order No. 12979 and Federal Acquisition Regulation (FAR 33.103). On October 25, 1995, President Clinton signed Executive Order No. 12979 which directs heads of executive agencies to develop administrative procedures for resolving protests to awards of procurement contracts within their agencies at a level above the Contracting Officer. Authority to administer procurement-related directives has been delegated within the Department of Commerce through the Chief Financial Officer and Assistant Secretary for Administration to the Director for Acquisition Management (Procurement Executive). The Department's goal is to encourage protesters to resolve their protests at the agency level, help build confidence in the Government's acquisition system, and reduce the number or frequency of protests to the General Accounting Office and other external fora. Prior to submission of an agency protest, all parties shall use their best efforts to resolve concerns raised by an interested party at the Contracting Officer level through open and frank discussions. If concerns cannot be resolved, protesters may use these procedures when a resolution is requested from the agency at a level above the Contracting Officer. An agency protest is one that may be filed with either the Contracting Officer or the Protest Decision Authority but not both. When a protester decides to file a protest at the agency level with ''the Protest Decision Authority'', as that term is defined in these regulations, the guidelines set forth in these established agency level protest procedures above the Contracting Officer apply. These procedures are in addition to the existing protest procedures contained in FAR Part 33.102.

Under these regulations, ''day'' is considered to be a calendar day. In computing a period of time for the purpose of these procedures, the day from which the period begins to run is not counted. When the last day of the period is a Saturday, Sunday, or Federal holiday, the period extends to the next day that is not a Saturday, Sunday, or Federal holiday. Similarly, when the Washington, DC offices of the Department of Commerce are closed for all or part of the last day, the period extends to the next day on which the Department is open for business.

Protesters using these procedures may protest to the ''Protest Decision Authority'' who will make the final decision for the Department. Protests shall be addressed to: (Name, title of the individual, and address of the individual listed in the solicitation).

Regulatory Flexibility Act

A Regulatory Flexibility Analysis is not required for this rule because it is being issued without prior notice and opportunity for comment. This rule pertains to a matter relating to public property, loans, grants, benefits, or contracts, 5 U.S.C. 553(a)(2), and does not constitute a significant revision to the CAR (48 CFR 1.501–3(a)).

Paperwork Reduction Act

This final rule contains information collection requirements which have been cleared by the Office of Management and Budget pursuant to the Paperwork Reduction Act (OMB Control No. 9000–0035). Notwithstanding any other provision of law, no person is required to respond to, nor shall any person be subject to a penalty for failure to comply with, a collection of information subject to the requirements of the Paperwork Reduction Act unless that collection of information displays a currently valid OMB control number.

Executive Order 12866

It has been determined that this rule is not significant for purposes of Executive Order 12866.

List of Subjects in 48 CFR Part 1333

Government procurement.

For the purposes set out in the preamble, 48 CFR Part 1333 is amended as follows:

1. The authority for Part 1333 continues to read as follows:

Authority: Federal Property and Administrative Services Act of 1949, as amended (40 U.S.C. 486(c)), as delegated by the Secretary of Commerce in Department Organization Order 10–5 and Department Administrative Order 108–2.

2. Amend Subpart 1333.1 by adding 1333.101 to read as follows:

1333.101 Definitions.

Agency protest, as used in this subpart, is one that may be filed with either the Contracting Officer or the Protest Decision Authority but not both.

Assistant General Counsel (AGC), as used in this subpart, means the Assistant General Counsel of the Department of Commerce for Finance and Litigation.

Protest Decision Authority, as used in this subpart, is the agency official above the level of the Contracting Officer who has been designated by the Procurement Executive to handle and issue the formal agency decision resolving the protest.

3. Add 1333.102 to read as follows:

1333.102 General.

(a) Protests must be received within ten work days after the basis for protest is known or should have been known unless good cause is shown to extend the time limit. However, protests based upon alleged improprieties in any type of solicitation which are apparent prior to bid opening or the closing time for receipt of initial proposals shall be filed prior to bid opening or the closing time for receipt of initial proposals. Unless the time limit for receiving the protest is extended for good cause, a protest to the contracting activity which is received after the time limit will not be considered. When a timely protest is filed only with the contracting activity, the contracting officer shall take prompt action toward resolution after consulting with the AGC, and notify the protestor in writing of the action taken.

(b) When a protest is filed only with the contracting activity before award, an award shall not be made until the matter is resolved, unless the head of the contracting office makes the determination prescribed in FAR 33.103(f).

(c) When a protest is filed only with the contracting activity after award, the Contracting Officer need not notify the contractor, if the protest can be promptly resolved. If it appears likely that a protest will be filed with the General Accounting Office (GAO), or other administrative forum, the Contracting Officer should promptly notify the contractor in writing and consider suspending contract performance.

4. Revise 1333.103 to read as follows:

1333.103 Protests to the agency.

(a) When a protester decides to file a protest at the agency level with the Protest Decision Authority, the guidelines set forth in these established agency level protest procedures above the Contracting Officer apply. These procedures are in addition to the existing protest procedures contained in the FAR Part 33.102 and 1333.102 of this subpart.

(1) For purposes of this subpart, a day is a calendar day. In computing a period of time for the purpose of these procedures, the day from which the period begins to run is not counted. When the last day of the period is a Saturday, Sunday, or Federal holiday, the period extends to the next day that is not a Saturday, Sunday, or Federal holiday. Similarly, when the Washington, DC offices of the Department of Commerce are closed for all or part of the last day, the period extends to the next day on which the Department is open.

(2) Protesters using these procedures may protest to the Protest Decision Authority who will make the final decision for the Department. Protests shall be addressed to: (Name, title of the person and address to be inserted by the Contracting Officer in the solicitation). The outside of the envelope or beginning of the FAX transmission must be marked ''Agency-level Protest''. The protester shall also provide a copy of the protest within 1 day to the responsible Contracting Officer and a copy to: Contract Law Division, Office of the Assistant General Counsel for Finance and Litigation, Department of Commerce, Room H5882, 14th Street and Constitution Avenue, NW, Washington, DC 20230, (FAX Number 202–482–5858).

(3) While a protest is pending at the agency level with the Protest Decision Authority, the protester agrees not to protest to the GAO or any other external fora. If the protester has already filed with the GAO or other external fora, the procedures described here may not be used.

(i) Protests based upon alleged improprieties in a solicitation which are apparent prior to bid opening or time set for receipt of proposals shall be filed prior to bid opening or the time set for receipt of proposals. If the contract has been awarded, protests must be filed within 10 days after contract award or 5 days after the date the protester was given the opportunity to be debriefed, whichever date is later. In cases other than those covered in the preceding two sentences, protests shall be filed not later than 14 days after the basis of the protest is known or should have been known, whichever is earlier.

(ii) To be filed on a given day, protests must be received by 4:30 PM current local time. Any protests received after that time will be considered to be filed on the next day. Incomplete submissions will not be considered filed until all information is provided.

(iii) To be complete, protests must contain the following information:

(A) The protester's name, address, telephone number, and fax number.

(B) The solicitation or contract number, name of contracting office and the Contracting Officer.

(C) A detailed statement of all factual and legal grounds for protests, and an explanation of how the protester was prejudiced.

(D) Copies of relevant documents supporting protester's statement.

(E) A request for ruling by the agency.

(F) Statement as to form of relief requested.

(G) All information establishing that the protester is an interested party for the purpose of filing a protest.

(H) All information establishing the timeliness of the protest.

(iv) All protests must be signed by an authorized representative of the protestor.

(b) Within 14 days after the protest is filed, the Contracting Officer will prepare an administrative report that responds to the issues raised by the protester and addresses any other issues, which, even if not raised by the protester, that may have been identified by agency officials as being relevant to the fairness of the procurement process. The Contracting Officer shall forward this administrative report to the Contract Law Division, Office of the Assistant General Counsel for Finance and Litigation.

(1) For good cause shown, the Protest Decision Authority may grant an extension of time for filing the administrative report and for issuing the written decision. When an extension is granted, the Protest Decision Authority will notify the protester and all interested parties within 1 day of the decision to grant the extension.

(2) Unless an extension is granted, the Protest Decision Authority will issue a decision within 35 days of the protest. The protest decision authority's final decision will be binding on the Department of Commerce and not subject to further appeals.

(3) The Protest Decision Authority shall send a written ruling and a summary of the reasons supporting the ruling to the protester, by ''Certified Mail, Return Receipt Requested,'' and shall forward information copies to the applicable contracting office and the Procurement Executive, Office of Acquisition Management.

(c) Effect of protest on award and performance.

(1) When a protest is filed prior to award, a contract may not be awarded unless authorized by the Head of the Contracting Activity (HCA) based on a written finding that:

(i) The supplies or services are urgently required.

(ii) Delivery or performance would be unduly delayed by failure to make the award promptly.

(iii) A prompt award will be in the best interest of the Government.

(2) When a protest is filed within 10 days after contract award, or 5 days after a debriefing date was offered to the protester under a timely debriefing request in accordance with FAR 15.1004, whichever is later, the Contracting Officer shall immediately suspend performance pending the resolution of the protest within the agency, including any review by an independent higher official, unless continued performance is justified. The HCA may authorize continued contract performance, notwithstanding the protest, based on a written finding that:

(i) Contract performance would be in the best interest of the United States; or

(ii) Urgent and compelling circumstances that significantly affect the interests of the United States will not permit waiting for a decision.

(d) The Protest Decision Authority may grant one or more of the following remedies:

(1) Terminate the contract.

(2) Re-compete the requirement.

(3) Issue a new solicitation.

(4) Refrain from exercising options under the contract.

(5) Award a contract consistent with statutes and regulations.

(6) Amend the solicitation provisions which gave rise to the protest and continue with the procurement.

(7) Such other remedies as the decision-maker may determine are necessary to correct a defect.

Robert A. Welch,

Procurement Executive.

[FR Doc. 99–8282 Filed 4–5–99; 8:45 am]

BILLING CODE 3510–EC–P

DEPARTMENT OF COMMERCE

National Oceanic and Atmospheric Administration

50 CFR Part 679

[Docket No. 990304062–9062–01; I.D. 033199F]

Fisheries of the Economic Exclusive Zone Off Alaska; Shallow-water Species Fishery by Vessels Using Trawl Gear in the Gulf of Alaska

AGENCY: National Marine Fisheries Service (NMFS), National Oceanic and Atmospheric Administration (NOAA), Commerce.

ACTION: Closure.

SUMMARY: NMFS is prohibiting directed fishing for species that comprise the shallow-water species fishery by vessels using trawl gear in the Gulf of Alaska (GOA), except for vessels fishing for pollock using pelagic trawl gear in those portions of the GOA open to directed fishing for pollock. This action is necessary because the second seasonal apportionment of the 1999 halibut bycatch allowance specified for the trawl shallow-water species fishery in the GOA has been caught.

DATES: Effective 1200 hrs, Alaska local time (A.l.t.), April 1, 1999, until 1200 hrs, A.l.t., July 4, 1999.

FOR FURTHER INFORMATION CONTACT: Mary Furuness, 907–586–7228.

SUPPLEMENTARY INFORMATION: NMFS manages the groundfish fishery in the GOA exclusive economic zone according to the Fishery Management Plan for Groundfish of the Gulf of Alaska (FMP) prepared by the North Pacific Fishery Management Council under authority of the Magnuson-Stevens Fishery Conservation and Management Act. Regulations governing fishing by U.S. vessels in accordance with the FMP appear at subpart H of 50 CFR part 600 and 50 CFR part 679.

The Final 1999 Harvest Specifications of Groundfish for the GOA (64 FR 12094, March 11, 1999) established the Pacific halibut bycatch allowance for the GOA trawl shallow-water species fishery, which is defined at § 679.21(d)(3)(iii)(A), for the second season, the period April 1, 1999, through July 3, 1999, as 100 metric tons.

In accordance with § 679.21(d)(7)(i), the Administrator, Alaska Region, NMFS (Regional Administrator), has determined that the second seasonal apportionment of the 1999 Pacific halibut bycatch allowance specified for the trawl shallow-water species fishery in the GOA has been caught. Consequently, NMFS is prohibiting directed fishing for the shallow-water species fishery by vessels using trawl gear in the GOA, except for vessels fishing for pollock using pelagic trawl gear in those portions of the GOA open to directed fishing for pollock. The species and species groups that comprise the shallow-water species fishery are: Pollock, Pacific cod, shallow-water flatfish, flathead sole, Atka mackerel, and ''other species.''

Maximum retainable bycatch amounts may be found in the regulations at § 679.20(e) and (f).

Classification

This action responds to the best available information recently obtained from the fishery. It must be implemented immediately in order to prevent overharvesting the second seasonal apportionment of the 1999 Pacific halibut bycatch allowance specified for the trawl shallow-water species fishery in the GOA. A delay in the effective date is impracticable and contrary to the public interest. The fleet has already taken the second seasonal bycatch allowance of Pacific halibut. Further delay would only result in the 1999 Pacific halibut bycatch allowance specified for the trawl shallow-water species fishery in the GOA being exceeded. NMFS finds for good cause that the implementation of this action can not be delayed for 30 days. Accordingly, under 5 U.S.C. 553(d), a delay in the effective date is hereby waived.

This action is required by § 679.21 and is exempt from review under E.O. 12866.

Authority: 16 U.S.C. 1801 *et seq.*

Dated: March 31, 1999.

Bruce Morehead,

Acting Director, Office of Sustainable Fisheries, National Marine Fisheries Service.

[FR Doc. 99–8430 Filed 4–1–99; 3:49 pm]

BILLING CODE 3510–22–F

Proposed Rules

Federal Register
Vol. 64, No. 65
Tuesday, April 6, 1999

This section of the FEDERAL REGISTER contains notices to the public of the proposed issuance of rules and regulations. The purpose of these notices is to give interested persons an opportunity to participate in the rule making prior to the adoption of the final rules.

DEPARTMENT OF AGRICULTURE

Animal and Plant Health Inspection Service

9 CFR Part 93

[Docket No. 98–055–1]

Horses From Morocco; Change in Disease Status

AGENCY: Animal and Plant Health Inspection Service, USDA.

ACTION: Proposed rule.

SUMMARY: We are proposing to amend the regulations concerning the importation of horses to remove Morocco from the list of regions the Animal and Plant Health Inspection Service considers affected with African horse sickness. This proposed action is based on information received from Morocco and is in accordance with standards set by the Office International des Epizooties for recognizing a country as free of African horse sickness. This proposed action would relieve restrictions on the importation of horses into the United States from Morocco.

DATES: Consideration will be given only to comments received on or before June 7, 1999.

ADDRESSES: Please send an original and three copies of your comments to Docket No. 98–055–1, Regulatory Analysis and Development, PPD, APHIS, suite 3C03, 4700 River Road Unit 118, Riverdale, MD 20737–1238. Please state that your comments refer to Docket No. 98–055–1. Comments received may be inspected at USDA, room 1141, South Building, 14th Street and Independence Avenue SW., Washington, DC, between 8 a.m. and 4:30 p.m., Monday through Friday, except holidays. Persons wishing to inspect comments are requested to call ahead on (202) 690–2817 to facilitate entry into the comment reading room.

FOR FURTHER INFORMATION CONTACT: Dr. John Cougill, Senior Staff Veterinarian, Products Program, National Center for Import and Export, VS, APHIS, 4700 River Road Unit 40, Riverdale, MD 20737–1231, (301) 734–3399; or e-mail: john.w.cougill@usda.gov.

SUPPLEMENTARY INFORMATION:

Background

The regulations in 9 CFR part 93 (referred to below as the regulations) prescribe the conditions for the importation into the United States of specified animals to prevent the introduction of various animal diseases, including African horse sickness (AHS). AHS is a fatal viral equine disease that is not known to exist in the United States.

Section 93.308(a)(2) of the regulations lists regions that the Animal and Plant Health Inspection Service (APHIS) considers affected with AHS and sets forth specific quarantine requirements for horses that are imported from those regions. APHIS requires horses intended for importation from any of the regions listed, including horses that have stopped in or transited those regions, to enter the United States only at the port of New York and be quarantined at the New York Animal Import Center in Newburgh, NY, for at least 60 days. This precaution is necessary to help ensure that the horses are not affected with AHS.

We are proposing to recognize Morocco as free of AHS. We are proposing this action based on information given to APHIS by Morocco and standards set by the Office International des Epizooties (OIE).

In order for a country to be recognized as free of AHS, the OIE requires the disease to be mandatorily reportable. In addition, the country must not have vaccinated domestic horses or other equines against the disease during the past 12 months. The OIE also requires that the country have no clinical, serological (in nonvaccinated animals), or epidemiological evidence of AHS for the past 2 years. Morocco has not had a recorded case of AHS in over 6 years, and vaccination against AHS has not been permitted for over 3 years.

With its request to be considered free of AHS, Morocco provided APHIS with information about its veterinary infrastructure, animal health monitoring system, trading practices with other regions, and other pertinent information that we require in order to determine whether Morocco should be recognized as free of AHS.

APHIS has reviewed the information provided by Morocco in support of declaring it free of AHS. Based on that information, and in accordance with OIE standards for recognizing a country as free of AHS, we are proposing to consider Morocco as free of AHS. Therefore, we are proposing to amend § 93.308(a)(2) by removing Morocco from the list of regions declared affected with AHS. This proposed action would allow horses from Morocco to be shipped to and quarantined at ports designated in § 93.303, and would reduce the quarantine period to an average of 3 days to meet the quarantine and testing requirements specified in § 93.308.

On October 28, 1997, we published a final rule and policy statement in the **Federal Register** that established procedures for recognizing regions, rather than only countries, for the purpose of importing animals and animal products into the United States, and that established procedures by which regions may request permission to export animals and animal products to the United States under specified conditions, based on the regions' disease status (see 62 FR 56000–56033, Dockets Nos. 94–106–8 and 94–106–9). The final rule was effective on November 28, 1997. The request from Morocco addressed by this proposed rule is not a request to be recognized as a region, rather than a country, nor a request to establish new import conditions based on the disease status of regions. Therefore, we have handled and evaluated this request in the traditional framework of recognizing a country as affected or not affected with a specified disease. If this proposed rule is adopted, the current regulations regarding importation of horses from regions free of AHS will apply.

We are also proposing to revise 93.308(a)(2) to make it easier to read.

Executive Order 12866 and Regulatory Flexibility Act

This proposed rule has been reviewed under Executive Order 12866. The rule has been determined to be not significant for the purposes of Executive Order 12866 and, therefore, has not been reviewed by the Office of Management and Budget.

This proposed rule would recognize Morocco as free of AHS. This action would allow horses from Morocco to be shipped to and quarantined at ports

designated in 93.303 and would reduce the quarantine and testing period to an average of 3 days to meet quarantine requirements specified in 93.308.

U.S. importers of competition and breeding horses from Morocco would be affected by this rule if it is adopted. These importers would no longer be required to quarantine horses from Morocco for 60 days at the New York Animal Import Center in Newburgh, NY, at a cost of approximately $5,296 per horse.

In 1996, the United States imported 31,633 horses, valued at $7,523,000; none of these horses were imported into the United States from Morocco. Removing the requirement for a 60-day quarantine for horses from Morocco would make the importation of horses less expensive and logistically easier. As a result, we anticipate that U.S. importers of competition and breeding horses might begin importing horses from Morocco. Since the value of Morocco's exports of purebred horses in 1996 was approximately $39,000, we do not expect that the number of horses exported to the United States would be significant. Furthermore, most horses imported from Morocco would probably be in the United States on a temporary basis for particular events, such as for races, or for breeding, and then transported back to Morocco. For these reasons, we anticipate the overall economic impact on U.S. entities would be minimal.

Under these circumstances, the Administrator of the Animal and Plant Health Inspection Service has determined that this action would not have a significant economic impact on a substantial number of small entities.

Executive Order 12988

This rule has been reviewed under Executive Order 12988, Civil Justice Reform. If this proposed rule is adopted: (1) All State and local laws and regulations that are inconsistent with this rule will be preempted; (2) no retroactive effect will be given to this rule; and (3) administrative proceedings will not be required before parties may file suit in court challenging this rule.

Paperwork Reduction Act

This proposed rule contains no information collection or recordkeeping requirements under the Paperwork Reduction Act of 1995 (44 U.S.C. 3501 *et seq.*).

List of Subjects in 9 CFR Part 93

Animal diseases, Imports, Livestock, Poultry and poultry products, Quarantine, Reporting and recordkeeping requirements.

Accordingly, we propose to amend 9 CFR part 93 as follows:

PART 93—IMPORTATION OF CERTAIN ANIMALS, BIRDS, AND POULTRY, AND CERTAIN ANIMAL, BIRD, AND POULTRY PRODUCTS; REQUIREMENTS FOR MEANS OF CONVEYANCE AND SHIPPING CONTAINERS

1. The authority citation for part 93 would continue to read as follows:

Authority: 7 U.S.C. 1622; 19 U.S.C. 1306; 21 U.S.C. 102–105, 111, 114a, 134a, 134b, 134c, 134d, 134f, 136, and 136a; 31 U.S.C. 9701; 7 CFR 2.22, 2.80, and 371.2(d).

2. In 93.308, paragraph (a)(2) would be revised to read as follows:

§ 93.308 Quarantine requirements.

(a) * * *

(2) Horses intended for importation from regions APHIS considers to be affected with African horse sickness may enter the United States only at the port of New York, and must be quarantined at the New York Animal Import Center in Newburgh, New York, for at least 60 days. This restriction also applies to horses that have stopped in or transited a region considered affected with African horse sickness. APHIS considers the following regions to be affected with African horse sickness: All the regions on the continent of Africa, except Morocco; Oman, Qatar, Saudi Arabia, and the Yemen Arab Republic.

* * * * *

Done in Washington, DC, this 31st day of March 1999.

Joan M. Arnoldi,

Acting Administrator, Animal and Plant Health Inspection Service.

[FR Doc. 99–8456 Filed 4–5–99; 8:45 am]

BILLING CODE 3410–34–P

DEPARTMENT OF TRANSPORTATION

Federal Aviation Administration

14 CFR Part 39

[Docket No. 99–SW–11–AD; Amendment 39–11113; AD 99–08–07]

RIN 2120–AA64

Airworthiness Directives; McDonnell Douglas Helicopter Systems (MDHS) Model 369E, 369FF, 500N, and 600N Helicopters

AGENCY: Federal Aviation Administration, DOT.

ACTION: Final rule; request for comments.

SUMMARY: This amendment supersedes an existing priority letter airworthiness directive (AD) 98–17–14, applicable to MDHS Model 369E, 369FF, 500N, and 600N helicopters, that currently requires, within the next 14 calendar days, inspecting each relay receptacle contact socket for correct size of the contact socket holes and replacing incorrectly-sized contact sockets with airworthy contact sockets. This amendment requires the same inspections and replacements as the existing priority letter AD, but changes the serial numbers affected for the MDHS Model 500N and 600N helicopters and changes a part number that was incorrectly referenced in the existing AD. This amendment is prompted by three incidences in which a MDHS Model 600 helicopter's Engine Control Unit (ECU) Fail light illuminated, even though the ECU continued to automatically control the engine. The cause of the ECU malfunction indication was determined to be contact sockets that did not properly fit the corresponding pins of the affected relay. Improperly sized contact sockets could create multiple unsafe conditions. These conditions, if not corrected, could result in the loss of various engine control or warning systems including the undetected loss of the auto-reignition function after an engine flameout, failure of an engine to reignite, and a subsequent forced landing and the inability to immediately detect an engine-out condition or to properly govern main rotor speed following loss of the Full Authority Digital Engine Control (FADEC), and subsequent loss of control of the helicopter.

DATES: Effective April 21, 1999.

Comments for inclusion in the Rules Docket must be received on or before June 7, 1999.

ADDRESSES: Submit comments in triplicate to the Federal Aviation Administration (FAA), Office of the Regional Counsel, Southwest Region, Attention: Rules Docket No. 99–SW–11–AD, 2601 Meacham Blvd., Room 663, Fort Worth, Texas 76137.

FOR FURTHER INFORMATION CONTACT: Bruce Conze, Aerospace Engineer, FAA, Los Angeles Aircraft Certification Office, 3960 Paramount Blvd., Lakewood, California 90712, telephone (562) 627–5261, fax (562) 627–5210.

SUPPLEMENTARY INFORMATION: On August 14, 1998, the FAA issued Priority Letter AD 98–17–14, applicable to MDHS Model 369E, 369FF, 500N and 600N helicopters, that requires, within the next 14 calendar days, inspecting each relay receptacle, part number (P/N) HS4256–1, contact sockets for correct size of the contact socket holes, and

replacing incorrectly-sized contact sockets with airworthy contact sockets, P/N 019–0075–002. That action was prompted by an incident in which a MDHS Model 600 helicopter's ECU Fail light illuminated, even though the ECU continued to automatically control the engine. The helicopter manufacturer reported two additional similar incidents on other MDHS Model 600N helicopters. The cause of the ECU malfunction indication was determined to be contact sockets that did not properly fit the corresponding pins of the affected relay. That condition, if not corrected, could result in the loss of the Battery Hi Temp. relay and the Auto-Re-Ignition Igniter relay on MDHS Model 369E, 369FF, and 500N helicopters. The loss of these engine control or warning systems could result in multiple unsafe conditions, including the undetected loss of the auto-reignition function after an engine flameout, failure of an engine to reignite, and a subsequent forced landing. Also, that condition, if not corrected, could result in the undetected loss of the Battery Hi Temp. relay and the FADEC-related relays (which includes the ECU Fail relay, the Engine-Out relay, the Manual Mode relay, the FADEC Start relay, and the Voice Warning Unit) on MDHS Model 600N helicopters. The undetected loss of these engine control or warning systems could result in multiple unsafe conditions, including the inability to immediately detect an engine-out condition or to properly govern main rotor speed following loss of the FADEC, and subsequent loss of control of the helicopter.

Since the issuance of that AD, the FAA has determined that not all of the previously affected MDHS Model 600N helicopters have the unsafe condition; the prefix ''RN'' for the serial number for the MDHS Model 500N helicopters is incorrect; and the part number for the relay receptacle was incorrectly stated in Figure 1.

Since an unsafe condition has been identified that is likely to exist or develop on other MDHS Model 369E, 369FF, 500N and 600N helicopters of the same type design, this AD supersedes Priority Letter AD 98–17–14 to require, within the next 14 calendar days, inspecting each affected relay receptacle contact socket for correct size of the contact socket holes, and replacing incorrectly-sized sockets with airworthy contact sockets. The short compliance time involved is required because the previously described critical unsafe condition can adversely affect the controllability of the helicopter. Therefore, inspecting each suspect relay receptacle contact socket for correct size of the contact socket holes and replacing incorrectly-sized sockets with airworthy contact sockets is required within the next 14 calendar days, and this AD must be issued immediately.

Since a situation exists that requires the immediate adoption of this regulation, it is found that notice and opportunity for prior public comment hereon are impracticable, and that good cause exists for making this amendment effective in less than 30 days.

The FAA estimates that 156 helicopters of U.S. registry will be affected by this AD, that it will take approximately 4 work hours per helicopter to inspect and replace all contact sockets, and that the average labor rate is $60 per work hour. Required parts will cost approximately $864 per helicopter. Based on these figures, the total cost impact of the AD on U.S. operators is estimated to be $172,224 assuming one inspection per helicopter and replacement of all contact sockets on all the helicopters in the U.S. fleet.

Comments Invited

Although this action is in the form of a final rule that involves requirements affecting flight safety and, thus, was not preceded by notice and an opportunity for public comment, comments are invited on this rule. Interested persons are invited to comment on this rule by submitting such written data, views, or arguments as they may desire. Communications should identify the Rules Docket number and be submitted in triplicate to the address specified under the caption **ADDRESSES**. All communications received on or before the closing date for comments will be considered, and this rule may be amended in light of the comments received. Factual information that supports the commenter's ideas and suggestions is extremely helpful in evaluating the effectiveness of the AD action and determining whether additional rulemaking action would be needed.

Comments are specifically invited on the overall regulatory, economic, environmental, and energy aspects of the rule that might suggest a need to modify the rule. All comments submitted will be available, both before and after the closing date for comments, in the Rules Docket for examination by interested persons. A report that summarizes each FAA-public contact concerned with the substance of this AD will be filed in the Rules Docket.

Commenters wishing the FAA to acknowledge receipt of their comments submitted in response to this rule must submit a self-addressed, stamped postcard on which the following statement is made: ''Comments to Docket No. 99–SW–11–AD. The postcard will be date stamped and returned to the commenter.

The regulations adopted herein will not have substantial direct effects on the States, on the relationship between the national government and the States, or on the distribution of power and responsibilities among the various levels of government. Therefore, in accordance with Executive Order 12612, it is determined that this final rule does not have sufficient federalism implications to warrant the preparation of a Federalism Assessment.

The FAA has determined that this regulation is an emergency regulation that must be issued immediately to correct an unsafe condition in aircraft, and that it is not a ''significant regulatory action'' under Executive Order 12866. It has been determined further that this action involves an emergency regulation under DOT Regulatory Policies and Procedures (44 FR 11034, February 26, 1979). If it is determined that this emergency regulation otherwise would be significant under DOT Regulatory Policies and Procedures, a final regulatory evaluation will be prepared and placed in the Rules Docket. A copy of it, if filed, may be obtained from the Rules Docket at the location provided under the caption **ADDRESSES**.

List of Subjects in 14 CFR Part 39

Air transportation, Aircraft, Aviation safety, Safety.

Adoption of the Amendment

Accordingly, pursuant to the authority delegated to me by the Administrator, the Federal Aviation Administration amends part 39 of the Federal Aviation Regulations (14 CFR part 39) as follows:

PART 39—AIRWORTHINESS DIRECTIVES

1. The authority citation for part 39 continues to read as follows:

Authority: 49 U.S.C. 106(g), 40113, 44701.

§ 39.13 [Amended]

2. Section 39.13 is amended by adding a new airworthiness directive (AD) to read as follows:

AD 99–08–07 McDonnell Douglas Helicopter Systems: Amendment 39–11113. Docket No. 99–SW–11–AD. Supersedes Priority Letter AD 98–17–14, Docket No. 98–SW–32–AD.

Applicability: Model 369E (serial numbers (S/N) 384E through 0539E); Model 369FF (S/

N 076FF through 0128FF); Model 500N (serial numbers up to and including LN085); and Model 600N (serial numbers RN002 through RN039) helicopters, certificated in any category.

Note 1: This AD applies to each helicopter identified in the preceding applicability provision, regardless of whether it has been otherwise modified, altered, or repaired in the area subject to the requirements of this AD. For helicopters that have been modified, altered, or repaired so that the performance of the requirements of this AD is affected, the owner/operator must request approval for an alternative method of compliance in accordance with paragraph (e) of this AD. The request should include an assessment of the effect of the modification, alteration, or repair on the unsafe condition addressed by this AD; and, if the unsafe condition has not been eliminated, the request should include specific proposed actions to address it.

Compliance: Required within the next 14 calendar days, unless accomplished previously.

To prevent undetected loss of engine control or warning systems, accomplish the following:

(a) Access relays K1, K2, K3, K5, K104, and K200 (relays, part number (P/N) HS4240).

(b) Remove each relay specified in paragraph (a) from its relay receptacle (receptacle), P/N HS4256–1.

(c) Using a No. 60 drill bit or a 0.040-in. diameter wire as a gauge, attempt to insert the gauge into every contact socket (socket) of each relay. Ensure the gauge is inserted perpendicular to the face of the receptacle, to prevent damage to the receptacle and the socket (Figure 1). If the gauge can be inserted into a socket, it is unairworthy and must be replaced with an airworthy socket, P/N 019–0075–002.

BILLING CODE 4910–13–U

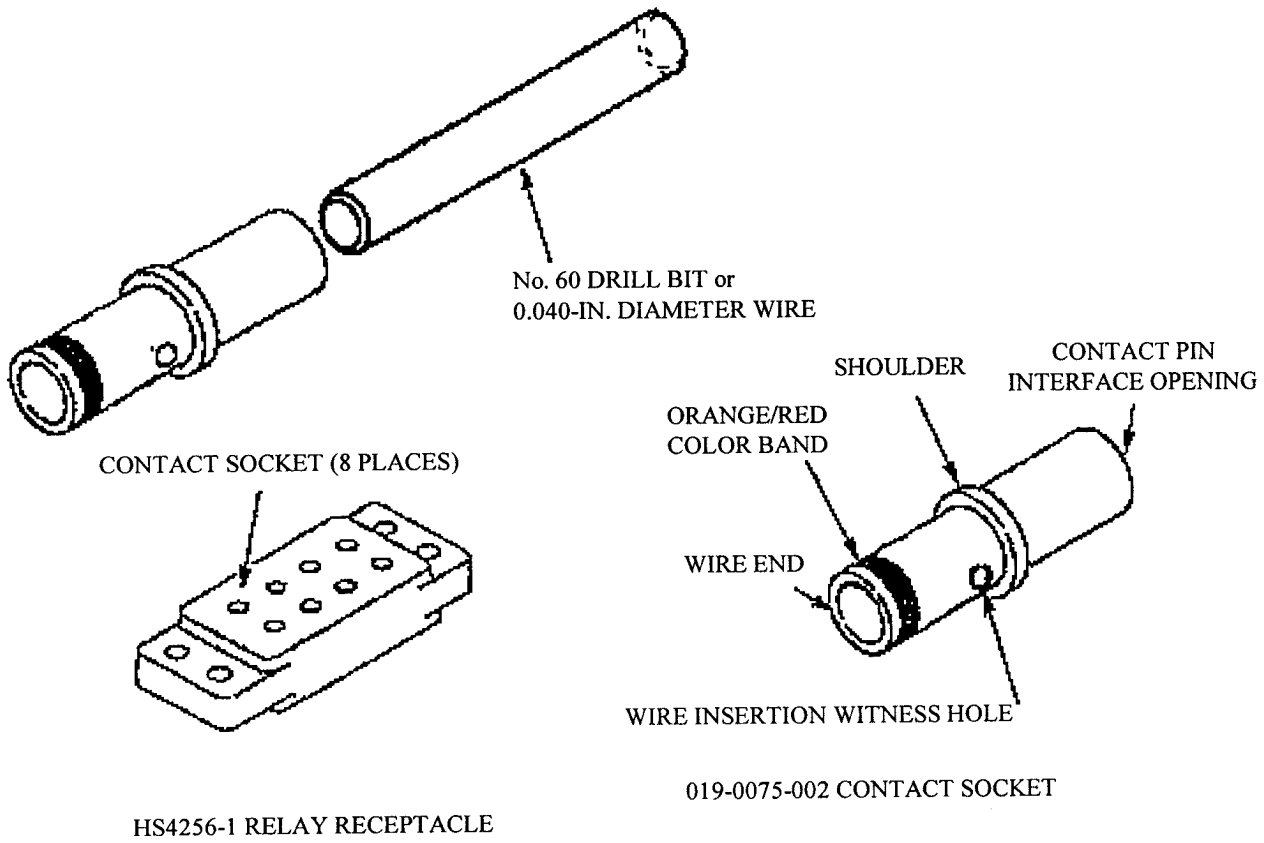

Figure 1. Contact Socket Inspection

BILLING CODE 4910–13–C

(d) Any replacement relay, P/N HS4240, must be inspected prior to further flight, in accordance with paragraph (c) of this AD.

Note 2: Boeing MDHS Service Bulletin, SB369E–090, SB369F–077, SB500N–017, SB600N–014, dated July 6, 1998, pertains to the subject of this AD.

(e) An alternative method of compliance or adjustment of the compliance time that provides an acceptable level of safety may be used if approved by the Manager, Los Angeles Aircraft Certification Office, FAA. Operators shall submit their requests through an FAA Principal Maintenance Inspector, who may concur or comment and then send it to the Manager, Los Angeles Aircraft Certification Office.

Note 3: Information concerning the existence of approved alternative methods of compliance with this AD, if any, may be obtained from the Los Angeles Aircraft Certification Office.

(f) Special flight permits may be issued in accordance with sections 21.197 and 21.199 of the Federal Aviation Regulations (14 CFR 21.197 and 21.199) to operate the helicopter to a location where the requirements of this AD can be accomplished.

Issued in Fort Worth, Texas, on March 30, 1999.

Eric Bries,

Acting Manager, Rotorcraft Directorate, Aircraft Certification Service.

[FR Doc. 99–8408 Filed 4–5–99; 8:45 am]

BILLING CODE 4910–13–U

ENVIRONMENTAL PROTECTION AGENCY

40 CFR Parts 52 and 70

[MO 063–1063; FRL–6320–5]

Approval and Promulgation of Implementation Plans and State Operating Permits Programs; State of Missouri

AGENCY: Environmental Protection Agency (EPA).

ACTION: Proposed rule.

SUMMARY: EPA is announcing the proposed approval of the Missouri ''Definitions and Common Reference Tables'' rule and certain portions of the Missouri ''Operating Permits'' rule as amendments to the Missouri State Implementation Plan (SIP) and as revisions to the Part 70 (operating permits) program. These revisions clarify the Missouri rules, update the rules for consistency with Federal regulations and other state rules, and are consistent with EPA guidance.

DATES: Comments must be received on or before May 6, 1999.

ADDRESSES: All comments should be addressed to: Kim Johnson, Environmental Protection Agency, Air Planning and Development Branch, 726 Minnesota Avenue, Kansas City, Kansas 66101.

Copies of the state submittals are available at the following addresses for inspection during normal business hours: Environmental Protection Agency, Air Planning and Development Branch, 726 Minnesota Avenue, Kansas City, Kansas 66101; and the Environmental Protection Agency, Air and Radiation Docket and Information Center, Air Docket (6102), 401 M Street, SW, Washington, D.C. 20460.

FOR FURTHER INFORMATION CONTACT: Kim Johnson, Environmental Protection Agency, Air Planning and Development Branch, 726 Minnesota Avenue, Kansas City, Kansas 66101. (913) 551–7975.

SUPPLEMENTARY INFORMATION:

Background

What Is a SIP?

Section 110 of the Clean Air Act (CAA) requires states to develop air pollution regulations and control strategies to ensure that state air quality meets the national ambient air quality standards established by EPA. These ambient standards are established under section 109 of the CAA, and they currently address six criteria pollutants. These pollutants are: carbon monoxide, nitrogen dioxide, ozone, lead, particulate matter (PM), and sulfur dioxide.

Each state must submit these regulations and control strategies to EPA for approval and incorporation into the Federally enforceable SIP.

The CAA requires each state to have a Federally approved SIP which protects air quality primarily by addressing air pollution at its point of origin. These SIPs can be extensive, containing state regulations or other enforceable documents and supporting information such as emission inventories, monitoring networks, and modeling demonstrations.

What Is the Federal Approval Process for a SIP?

In order for state regulations to be incorporated into the Federally enforceable SIP, states must formally adopt the regulations and control strategies consistent with state and Federal requirements. This process generally includes a public notice, public hearing, public comment period, and a formal adoption by a state-authorized rulemaking body.

Once a state rule, regulation, or control strategy is adopted, the state submits it to EPA for inclusion into the SIP. EPA must provide public notice and seek additional public comment regarding the proposed Federal action on the state submission. If adverse comments are received, they must be addressed prior to any final Federal action by EPA.

All state regulations and supporting information approved by EPA under section 110 of the CAA are incorporated into the Federally approved SIP. Records of such SIP actions are maintained in the Code of Federal Regulations (CFR) at Title 40, Part 52 entitled ''Approval and Promulgation of Implementation Plans.'' The actual state regulations which are approved are not reproduced in their entirety in the CFR but are ''incorporated by reference,'' which means that EPA has approved a given state regulation with a specific effective date.

What Does Federal Approval of a State Regulation Mean To Me?

Enforcement of the state regulation before and after it is incorporated into the Federally approved SIP is primarily a state responsibility. However, after the regulation is Federally approved, EPA is authorized to take enforcement action against violators. Citizens are also offered legal recourse to address violators as described in the CAA.

What Is the Part 70 (Operating Permits) Program?

The CAA amendments of 1990 require all states to develop operating permits programs that meet certain Federal criteria. In implementing this program, the states are to require certain sources of air pollution to obtain permits that contain all applicable requirements under the CAA. One purpose of the Part 70 (operating permits) program is to improve enforcement by issuing each source a single permit that consolidates all of the applicable CAA requirements into a Federally enforceable document. By consolidating all of the applicable requirements for a facility into one document, the source, the public, and the permitting authorities can more easily determine what CAA requirements apply and how compliance with those requirements is determined.

Sources required to obtain an operating permit under this program include: ''major'' sources of air pollution and certain other sources specified in the CAA or in EPA's implementing regulations. For example, all sources regulated under the acid rain program, regardless of size, must obtain permits. Examples of major sources include those that emit 100 tons per year or more of volatile organic compounds, carbon monoxide, lead, sulfur dioxide, nitrogen dioxide, or PM_{10}; those that emit 10 tons per year of any single hazardous air pollutant (HAP) (specifically listed under the CAA); or those that emit 25 tons per year or more of a combination of HAPs.

Revisions to the state operating permits program are also subject to public notice, comment, and EPA approval.

What Are the Changes That EPA Is Proposing to Approve?

The revisions include changes to the definitions rule 10 CSR 10–6.020 which (1) add a de minimis emission level for municipal solid waste landfills (any source which has emissions below this de minimis level is not required to obtain a new source permit), (2) remove caprolactam from the list of HAPs, and (3) revise the PM definition and the definition for particulate matter less than 10-microns in diameter (PM_{10}). These changes are all consistent with Federal regulations and EPA guidance.

The changes to the operating permits rule 10 CSR 10–6.065 include revising the exemption for grain-handling facilities by including an exemption from Part 70 permitting requirements for country grain elevators. Also included are operating permit rule updates to

make the exemptions consistent with the Missouri construction permits rule requirements, 10 CSR 10–6.060. For example, the sand and gravel operations exemption is revised to include operations with a production rate of less than 17.5 tons per hour instead of 150,000 tons per year. These changes are consistent with EPA guidance and add consistency between the applicable rules which reduces confusion. For more information regarding these changes, the reader is referred to the technical support document for this notice.

What Action Is EPA Taking?

EPA is proposing to approve, as an amendment to the SIP and the Part 70 program, the revisions to Missouri rules 10 CSR 10–6.020, ''Definitions and Common Reference Tables,'' and 10 CSR 10–6.065, ''Operating Permits.'' These revisions clarify the Missouri rules, update the rules for consistency with Federal regulations and other state rules, and are consistent with EPA guidance.

Therefore, EPA is seeking public comment regarding the proposed approval of this state submittal as an amendment to the SIP and the Part 70 (operating permits) program.

EPA is also taking comments on minor changes made to rule 6.020 (submitted to EPA on July 10, 1996) that were approved in a **Federal Register** notice dated May 14, 1997. The primary purpose of the May 14, 1997, notice was to give final approval to revisions which were submitted for approval on August 3, 1996. As a result, the May 14, 1997, notice did not fully discuss the minor changes submitted on July 10, 1996. These changes include revising the volatile organic compounds definition to exempt acetone for consistency with Federal regulations and revising the installation definition for clarity.

Therefore, EPA is taking comments on this revision at this time. If EPA receives adverse comments specifically relating to the two definition changes identified, EPA would withdraw its approval of one or both definition changes and take a new final action on the changes.

EPA also notes that sections (4)(A), (4)(B), and (4)(H) of Missouri rule 6.065 are not part of the SIP or Part 70 program and will not be acted on in this rulemaking.

Conclusion

Proposed Action

EPA is proposing to approve, as an amendment to the Federally approved SIP and the Part 70 program, the revisions to Missouri rules 10 CSR 10–6.020, ''Definitions and Common Reference Tables,'' and 10 CSR 10–6.065, ''Operating Permits,'' effective on April 30, 1998.

Administration Requirements

A. Executive Order (E.O.) 12866

The Office of Management and Budget (OMB) has exempted this regulatory action from E.O. 12866 entitled ''Regulatory Planning and Review.''

B. E.O. 12875

Under E.O. 12875, Enhancing the Intergovernmental Partnership, EPA may not issue a regulation that is not required by statute and that creates a mandate upon a state, local, or tribal government, unless the Federal government provides the funds necessary to pay the direct compliance costs incurred by those governments, or EPA consults with those governments. If EPA complies by consulting, E.O. 12875 requires EPA to provide to the OMB a description of the extent of EPA's prior consultation with representatives of affected state, local, and tribal governments, the nature of their concerns, copies of any written communications from the governments, and a statement supporting the need to issue the regulation. In addition, E.O. 12875 requires EPA to develop an effective process permitting elected officials and other representatives of state, local, and tribal governments ''to provide meaningful and timely input in the development of regulatory proposals containing significant unfunded mandates.''

Today's rule does not create a mandate on State, local or tribal governments. The rule does not impose any enforceable duties on these entities. Accordingly, the requirements of section 1(a) of E.O. 12875 do not apply to this rule.

C. E.O. 13045

Protection of Children from Environmental Health Risks and Safety Risks (62 FR 19885, April 23, 1997) applies to any rule that: (1) is determined to be ''economically significant'' as defined under E.O. 12866, and (2) concerns an environmental health or safety risk that EPA has reason to believe may have a disproportionate effect on children. If the regulatory action meets both criteria, the Agency must evaluate the environmental health or safety effects of the planned rule on children, and explain why the planned regulation is preferable to other potentially effective and reasonably feasible alternatives considered by the Agency.

This rule is not subject to E.O. 13045 because it is not an economically significant regulatory action as defined by E.O. 12866, and it does not address an environmental health or safety risk that would have a disproportionate effect on children.

D. E.O. 13084

Under E.O. 13084, Consultation and Coordination with Indian Tribal Governments, EPA may not issue a regulation that is not required by statute, that significantly or uniquely affects the communities of Indian tribal governments, and that imposes substantial direct compliance costs on those communities, unless the Federal government provides the funds necessary to pay the direct compliance costs incurred by the tribal governments, or EPA consults with those governments. If EPA complies by consulting, E.O. 13084 requires EPA to provide to the OMB, in a separately identified section of the preamble to the rule, a description of the extent of EPA's prior consultation with representatives of affected tribal governments, a summary of the nature of their concerns, and a statement supporting the need to issue the regulation. In addition, E.O. 13084 requires EPA to develop an effective process permitting elected officials and other representatives of Indian tribal governments ''to provide meaningful and timely input in the development of regulatory policies on matters that significantly or uniquely affect their communities.''

Today's rule does not significantly or uniquely affect the communities of Indian tribal governments. Accordingly, the requirements of section 3(b) of E.O. 13084 do not apply to this rule.

E. Regulatory Flexibility Act

The Regulatory Flexibility Act generally requires an agency to conduct a regulatory flexibility analysis of any rule subject to notice and comment rulemaking requirements, unless the agency certifies that the rule will not have a significant economic impact on a substantial number of small entities. Small entities include small businesses, small not-for-profit enterprises, and small governmental jurisdictions. This final rule will not have a significant impact on a substantial number of small entities because SIP approvals under section 110 and Subchapter I, Part D of the CAA do not create any new requirements, but simply approve requirements that the state is already imposing. Therefore, because the Federal SIP approval does not create any new requirements, I certify that this action will not have a significant

economic impact on a substantial number of small entities. Moreover, due to the nature of the Federal-state relationship under the CAA, preparation of flexibility analysis would constitute Federal inquiry into the economic reasonableness of state action. The CAA forbids EPA to base its actions concerning SIPs on such grounds. *Union Electric Co.,* v. *U.S. EPA,* 427 U.S. 246, 255–66 (1976); 42 U.S.C. 7410(a)(2).

F. Unfunded Mandates

Under section 202 of the Unfunded Mandates Reform Act of 1995 (''Unfunded Mandates Act''), signed into law on March 22, 1995, EPA must prepare a budgetary impact statement to accompany any proposed or final rule that includes a Federal mandate that may result in estimated annual costs to state, local, or tribal governments in the aggregate; or to private sector, of $100 million or more. Under section 205, EPA must select the most cost-effective and least burdensome alternative that achieves the objectives of the rule and is consistent with statutory requirements. Section 203 requires EPA to establish a plan for informing and advising any small governments that may be significantly or uniquely impacted by the rule.

EPA has determined that the approval action promulgated does not include a Federal mandate that may result in estimated annual costs of $100 million or more to either state, local, or tribal governments in the aggregate, or to the private sector. This Federal action approves pre-existing requirements under state or local law, and imposes no new requirements. Accordingly, no additional costs to state, local, or tribal governments, or to the private sector, result from this action.

List of Subjects

40 CFR Part 52

Environmental protection, Air pollution control, Carbon monoxide, Hydrocarbons, Incorporation by reference, Intergovernmental relations, Lead, Nitrogen dioxide, Ozone, Particulate matter, Reporting and recordkeeping requirements, Sulfur oxides, Volatile organic compounds.

40 CFR Part 70

Environmental protection, Administrative practice and procedure, Air pollution control, Intergovernmental relations, Operating permits, Reporting and recordkeeping requirements.

Authority: 42 U.S.C. 7401 *et seq.*

March 26, 1999.

Dennis Grams, P.E.,

Regional Administrator, Region VII.

[FR Doc. 99–8482 Filed 4–5–99; 8:45 am]

BILLING CODE 6560–50–P

FEDERAL COMMUNICATIONS COMMISSION

47 CFR Part 1

[MD Docket No. 98–200; FCC 99–44]

Assessment and Collection of Regulatory Fees for Fiscal Year 1999

AGENCY: Federal Communications Commission.

ACTION: Notice of proposed rulemaking.

SUMMARY: The Commission is proposing to revise its Schedule of Regulatory Fees in order to recover the amount of regulatory fees that Congress has required it to collect for fiscal year 1999. Section 9 of the Communications Act of 1934, as amended, provides for the annual assessment and collection of regulatory fees. For fiscal year 1999 sections 9(b)(2) and (3) provide for annual ''Mandatory Adjustments'' and ''Permitted Amendments'' to the Schedule of Regulatory Fees. These revisions will further the National Performance Review goals of reinventing Government by requiring beneficiaries of Commission services to pay for such services.

DATES: Comments are due on or before April 19, 1999, and reply comments are due on or before April 29, 1999.

FOR FURTHER INFORMATION CONTACT: Terry Johnson, Office of Managing Director at (202) 418–0445.

SUPPLEMENTARY INFORMATION:

Table of Contents

Topic

I. Introduction
II. Background
III. Discussion
A. Summary of FY 1999 Fee Methodology
B. Development of FY 1999 Fees
i. Adjustment of Payment Units
ii. Calculation of Revenue Requirements
iii. Recalculation of Fees
iv. Proposed Changes to Fee Schedule
a. FY 1999 Fee Schedule To Be Based on Mandatory Adjustments
b. Reduction of the FM Construction Permit Fee
v. Effect of Revenue Redistributions on Major Constituencies
C. Notice of Inquiry Issues
D. Procedures for Payment of Regulatory Fees
i. Annual Payments of Standard Fees
ii. Installment Payments for Large Fees
iii. Advance Payments of Small Fees
iv. Minimum Fee Payment Liability
v. Standard Fee Calculations and Payments
E. Schedule of FY 1999 Regulatory Fees
IV. Procedural Matters
A. Comment Period and Procedures
B. *Ex Parte* Rules
C. Initial Regulatory Flexibility Analysis
D. Authority and Further Information
Attachment A—Initial Regulatory Flexibility Analysis
Attachment B—Sources of Payment Unit Estimates For FY 1999
Attachment C—Calculation of Revenue Requirements and Pro-Rata Fees
Attachment D—FY 1999 Schedule of Regulatory Fees
Attachment E—Comparison Between FY 1998 and FY 1999 Proposed Regulatory Fees
Attachment F—Detailed Guidance on Who Must Pay Regulatory Fees
Attachment G—Description of FCC Activities
Attachment H—Factors, measurements and calculations that go into determining station signal contours and associated population coverages

I. Introduction

1. By this *Notice of Proposed Rulemaking,* the Commission commences a proceeding to revise its Schedule of Regulatory Fees in order to collect the amount of regulatory fees that Congress, pursuant to section 9(a) of the Communications Act, as amended, has required it to collect for Fiscal Year (FY) 1999.[1]

2. Congress has required that we collect $172,523,000 through regulatory fees in order to recover the costs of our enforcement, policy and rulemaking, international and user information activities for FY 1999.[2] This amount is $10,000,000 or approximately 6% more than the amount that Congress designated for recovery through regulatory fees for FY 1998.[3] Thus, we are proposing to revise our fees in order to collect the increased amount that Congress has required that we collect. Additionally, we propose to amend the Schedule in order to simplify and streamline it.[4]

3. In proposing to revise our fees, we adjusted the payment units and revenue requirement for each service subject to a fee, consistent with sections 159(b)(2) and (3). In addition, we are proposing changes to the fees pursuant to public interest considerations. The current Schedule of Regulatory Fees is set forth in sections 1.1152 through 1.1156 of the Commission's rules.[5]

---

[1] 47 U.S.C. 159 (a).

[2] Public Law 105–277 and 47 U.S.C. 159(a)(2).

[3] *Assessment and Collection of Regulatory Fees for Fiscal Year 1998,* FCC 98–115, released June 16, 1998, 63 FR 35847 (Jul. 1, 1998).

[4] 47 U.S.C. 159(b)(3).

[5] 47 CFR 1.1152 through 1.1156.

II. Background

4. Section 9(a) of the Communications Act of 1934, as amended, authorizes the Commission to assess and collect annual regulatory fees to recover the costs, as determined annually by Congress, that it incurs in carrying out enforcement, policy and rulemaking, international, and user information activities.[6] See Attachment G for a description of these activities. In our *FY 1994 Fee Order*,[7] we adopted the Schedule of Regulatory Fees that Congress established, and we prescribed rules to govern payment of the fees, as required by Congress.[8] Subsequently, we modified the fee Schedule to increase the fees in accordance with the amounts Congress required us to collect in each succeeding fiscal year. We also amended the rules governing our regulatory fee program based upon our experience administering the program in prior years.[9]

5. As noted, for FY 1994 we adopted the Schedule of Regulatory Fees established in section 9(g) of the Act. For fiscal years after FY 1994, however, sections 9(b)(2) and (3), respectively, provide for ''Mandatory Adjustments'' and ''Permitted Amendments'' to the Schedule of Regulatory Fees.[10] Section 9(b)(2), entitled ''Mandatory Adjustments,'' requires that we revise the Schedule of Regulatory Fees whenever Congress changes the amount that we are to recover through regulatory fees.[11]

6. Section 9(b)(3), entitled ''Permitted Amendments,'' requires that we determine annually whether additional adjustments to the fees are warranted, taking into account factors that are reasonably related to the payer of the fee and factors that are in the public interest. In making these amendments, we are to ''add, delete, or reclassify services in the Schedule to reflect additions, deletions or changes in the nature of its services.'' [12]

7. Section 9(i) requires that we develop accounting systems necessary to adjust our fees pursuant to changes in the costs of regulation of various services that are subject to a fee, and for other purposes.[13] For FY 1997, we relied for the first time on cost accounting data to identify our regulatory costs and to develop our FY 1997 fees based upon these costs. Also, for FY 1997, we limited the increase in the amount of the fee for any service in order to phase in our reliance on cost-based fees for those services whose revenue requirement would be more than 25 percent above the revenue requirement which would have resulted from the ''mandatory adjustments'' to the FY 1997 fees without incorporation of costs. This methodology, which we continued to utilize for FY 1998, enabled us to develop regulatory fees which we believed to be more reflective of our costs of regulation, and allowed us to make revisions to our fees based on the fullest extent possible, and consistent with the public interest, on the actual costs of regulating those services subject to a fee. Finally, section 9(b)(4)(B) requires that we notify Congress of any permitted amendments 90 days before those amendments go into effect.[14]

III. Discussion

A. Summary of FY 1999 Fee Methodology

8. As noted, Congress has required that the Commission recover $172,523,000 for FY 1999 through the collection of regulatory fees, representing the costs applicable to our enforcement, policy and rulemaking, international, and user information activities.[15]

9. In developing our proposed FY 1999 fee schedule, we first determined that we would continue to use the same general methodology for ''Mandatory Adjustments'' to the Fee Schedule as we used in developing fees for FY 1998. We estimated the number of payment units [16] for FY 1999 in order to determine the aggregate amount of revenue we would collect without any revision to our FY 1998 fees. Next, we compared this revenue amount to the $172,523,000 that Congress has required us to collect in FY 1999 and pro-rated the difference among all the existing fee categories.

10. Once we established our tentative FY 1999 fees, we evaluated proposals made by Commission staff concerning ''Permitted Amendments'' to the Fee Schedule and to our collection procedures. These proposals are discussed in paragraphs 15–19 and are factored into our proposed FY 1999 Schedule of Regulatory Fees, set forth in Attachment D.

11. Finally, we have incorporated, as Attachment F, proposed Guidance containing detailed descriptions of each fee category, information on the individual or entity responsible for paying a particular fee and other critical information designed to assist potential fee payers in determining the extent of their fee liability, if any, for FY 1999.[17] In the following paragraphs, we describe in greater detail our proposed methodology for establishing our FY 1999 regulatory fees.

B. Development of FY 1999 Fees

i. Adjustment of Payment Units

12. In calculating individual service regulatory fees for FY 1999, we adjusted the estimated payment units for each service because payment units for many services have changed substantially since we adopted our FY 1998 fees. We obtained our estimated payment units through a variety of means, including our licensee data bases, actual prior year payment records, and industry and trade group projections. Whenever possible, we verified these estimates from multiple sources to ensure the accuracy of these estimates. Attachment B provides a summary of how revised payment units were determined for each fee category.[18]

ii. Calculation of Revenue requirements

13. We next multiplied the revised payment units for each service by the FY 1998 fees in each category to determine how much revenue we would collect without any change to the FY 1998 Schedule of Regulatory Fees. The amount of revenue which we would collect without changes to the Fee Schedule is approximately $157.6 million. This amount is approximately $14.9 million less than the amount the Commission is required to collect in FY 1999. We then adjusted the revenue requirements for each category on a proportional basis, consistent with Section 9(b)(2) of the Act, to obtain an estimate of the revenue requirements for each fee category so that the Commission could collect $172,523,000 as required by Congress. Attachment C

[6] 47 U.S.C. 159(a).

[7] 59 FR 30984 (Jun. 16, 1994).

[8] 47 U.S.C. 159(b), (f)(1).

[9] 47 CFR 1.1151 *et seq.*

[10] 47 U.S.C. 159(b)(2), (b)(3).

[11] 47 U.S.C. 159(b)(2).

[12] 47 U.S.C. 159(b)(3).

[13] 47 U.S.C. 159(i).

[14] 47 U.S.C. 159(b)(4)(B).

[15] 47 U.S.C. 159(a).

[16] Payment units are the number of subscribers, mobile units, pagers, cellular telephones, licenses, call signs, adjusted gross revenue dollars, etc. which represent the base volumes against which fee amounts are calculated.

[17] We also will incorporate a similar Attachment in the *Report and Order* concluding this rulemaking. That Attachment will contain updated information concerning any changes made to the proposed fees adopted by the *Report and Order.*

[18] It is important to also note that Congress' required revenue increase in regulatory fee payments of approximately six percent in FY 1999 will not fall equally on all payers because payment units have changed in several services. When the number of payment units in a service increase from one year to another, fees do not have to rise as much as they would if payment units had decreased or remained stable. Declining payment units have the opposite effect on fees.

provides detailed calculations showing how we determined the revised revenue amounts to be raised for each service.

iii. Recalculation of Fees

14. Once we determined the amount of fee revenue that it is necessary to collect from each class of licensee, we divided the revenue requirement by the number of payment units (and by the license term, if applicable, for ''small'' fees) to obtain actual fee amounts for each fee category. These calculated fee amounts were then rounded in accordance with section 9(b)(3) of the Act. *See* Attachment C.

iv. Proposed Changes to Fee Schedule

15. We examined the results of our calculations to determine if further adjustments of the fees and/or changes to payment procedures were warranted based upon the public interest and other criteria established in 47 U.S.C. 159(b)(3). [19] As a result of this review, we are proposing the following ''Permitted Amendments'' to our Fee Schedule:

a. FY 1999 Fee Schedule To Be Based on Mandatory Adjustments

16. We are proposing that the FY 1999 fee schedule be based on the mandatory adjustments as computed in Attachment C and in accordance with section 9(b)(2) of the Act.

b. Reduction of the FM Construction Permit Fee

17. In the original Congressional fee schedule, the FM Construction Permit fee was set at $500 (Five times the AM Construction Permit Fee of $100). In succeeding year's schedules, nearly the same relationship has prevailed as evidenced by the calculated FM Construction Permit fee for FY 1999 of $1,250 (compared to the calculated AM Construction Permit fee for FY 1999 of $255).

18. Several parties have informally expressed concern that the FM Construction Permit fee is out of proportion in relation to the fees imposed on licensed FM stations particularly in less populated areas. At the same time, it should be noted that the regulatory costs borne by the Commission applicable to FM Construction Permits is significantly higher than its costs for AM Construction Permits.

19. We seek comment on a staff proposal to make a permitted amendment to the schedule of regulatory fees for FY 1999 reducing the FM Construction Permit fee to $765 (three times the AM Construction Permit fee). This reduction would result in a loss of $145,500 in estimated regulatory fee collections.

v. Effect of Revenue Redistributions on Major Constituencies

20. The following chart illustrates the relative percentage of the overall revenue requirements borne by the major constituencies since the inception of regulatory fees in FY 1994.

PERCENTAGE OF REVENUE COLLECTED BY CONSTITUENCY

	FY 1994 (actual)	FY 1995 (actual)	FY 1996 (actual)	FY 1997 (actual)	FY 1998 (actual)	FY 1999 (proposed)
Cable TV Operators (Inc. CARS Licenses)	41.4	24.0	33.4	21.8	17.9	17.9
Broadcast Licensees	23.8	13.8	14.6	14.1	15.6	15.4
Satellite Operators (Inc. Earth Stations)	3.3	3.6	4.0	5.0	5.3	5.6
Common Carriers	25.0	44.5	40.9	49.8	47.5	47.1
Wireless Licensees	6.5	14.1	7.1	9.3	13.7	14.0
Total	100.0	100.0	100.0	100.0	100.0	100.0

C. Notice of Inquiry Issues

21. On November 10, 1998, the Commission adopted a *Notice of Inquiry* in this proceeding seeking comments on five specific issues.[20] Briefly, the issues for which comments were sought included: (1) Clarification of the Commercial Mobile Radio Services (''CMRS'') fee categories and demarcation of which types of services or usage to include in each category; [21] (2) determination of the appropriate basis for assessing regulatory fees on geostationary orbit space stations (''GSOs''); (3) determination of the appropriate method of assessing our regulatory costs associated with non-geostationary orbit space station systems (''NGSOs'') to licensees which have launched satellites or to all NGSO licensees; (4) whether we should base revenues for interstate telephone service providers on the Universal Services Fund's end user methodology rather than the Telecommunication Relay Services Fund adjusted gross revenue methodology; and (5) whether we should create a ''new services'' category in our cost accounting system in which costs associated with development of new services, regardless of the service, would be proportionately assessed to all feeable categories rather than assessed to existing licensees in the same service category.

22. In the interest of expediting this *NPRM,* we are deferring analysis of the comments and replies received pursuant to the *NOI* for inclusion in the final Report and Order in this proceeding. Commenters do not need to resubmit these same arguments in response to this *NPRM.* Further, the basis for assessing revenues for interstate telephone service providers is best delayed until the conclusion of CC Docket No. 98–171, *In the Matter of 1998 biennial Regulatory Review—Streamlined Contributor Reporting Requirements Associated with Administration of Telecommunications Relay Services, North American Numbering Plan, Local Number Portability, and Universal Service support Mechanisms.*[22]

D. Procedures for Payment of Regulatory Fees

23. Generally, we propose to retain the procedures that we have established for the payment of regulatory fees. Section 9(f) requires that we permit ''payment by installments in the case of fees in large amounts, and in the case of small amounts, shall require the payment of the fee in advance for a

[19] In FY 1997 and FY 1998 we limited increases to 25%. For FY 1999, none of the proposed fee increases exceed 25%.

[20] 63 FR 70090 (Dec. 18, 1998).

[21] In this regard we specifically request additional comments on a proposal raised by BellSouth Wireless in its Petitions for Reconsideration of the FY 1997 and FY 1998 Rulemakings, that the Commission reclassify 900 MHz SMR Service into the CMRS Message Service.

[22] FCC 98–233, released September 25, 1998, 63 FR 54090 (Oct. 8, 1998).

number of years not to exceed the term of the license held by the payer.'' *See* 47 U.S.C. 159(f)(1). Consistent with section 9(f), we are again proposing to establish three categories of fee payments, based upon the category of service for which the fee payment is due and the amount of the fee to be paid. The fee categories are (1) ''standard'' fees, (2) ''large'' fees, and (3) ''small'' fees.

i. Annual Payments of Standard Fees

24. As we have in the past, we are proposing to treat regulatory fee payments by certain licensees as ''standard fees'' which are those regulatory fees that are payable in full on an annual basis. Payers of standard fees are not required to make advance payments for their full license term and are not eligible for installment payments. All standard fees are payable in full on the date we establish for payment of fees in their regulatory fee category. The payment dates for each regulatory fee category will be announced either in the Report and Order terminating this proceeding or by public notice in the **Federal Register** pursuant to authority delegated to the Managing Director.

ii. Installment Payments for Large Fees

25. While we are mindful that time constraints may preclude an opportunity for installment payments, we propose that regulatees in any category of service with a liability of $12,000 or more be eligible to make installment payments and that eligibility for installment payments be based upon the amount of either a single regulatory fee payment or combination of fee payments by the same licensee or regulatee. We propose that regulatees eligible to make installment payments may submit their required fees in two equal payments (on dates to be announced) or, in the alternative, in a single payment on the date that their final installment payment is due. Due to statutory constraints concerning notification to Congress prior to actual collection of the fees, however, it is unlikely that there will be sufficient time for installment payments, and that regulatees eligible to make installment payments will be required to pay these fees on the last date that fee payments may be submitted. The dates for installment payments, or a single payment, will be announced either in the *Report and Order* terminating this proceeding or by public notice published in the **Federal Register** pursuant to authority delegated to the Managing Director.

iii. Advance Payments of Small Fees

26. As we have in the past, we are proposing to treat regulatory fee payments by certain licensees as ''small'' fees subject to advance payment consistent with the requirements of section 9(f)(2). We propose that advance payments will be required from licensees of those services that we decided would be subject to advance payments in our FY 1994 *Report and Order,* and to those additional payers set forth herein.[23] We are also proposing that payers of advance fees will submit the entire fee due for the full term of their licenses when filing their initial, renewal, or reinstatement application. Regulatees subject to a payment of small fees shall pay the amount due for the current fiscal year multiplied by the number of years in the term of their requested license. In the event that the required fee is adjusted following their payment of the fee, the payer would not be subject to the payment of a new fee until filing an application for renewal or reinstatement of the license. Thus, payment for the full license term would be made based upon the regulatory fee applicable at the time the application is filed. The effective date for payment of small fees established in this proceeding will be announced in our *Report and Order* terminating this proceeding or by public notice published in the **Federal Register** pursuant to authority delegated to the Managing Director.

iv. Minimum Fee Payment Liability

27. As we have in the past, we are proposing that regulatees whose total regulatory fee liability, including all categories of fees for which payment is due by an entity, amounts to less than $10 will be exempted from fee payment in FY 1999.

v. Standard Fee Calculations and Payment Dates

28. As noted, the time for payment of standard fees and any installment payments will be announced in our *Report and Order* terminating this proceeding or will be published in the **Federal Register** pursuant to authority delegated to the Managing Director. For licensees, permittees and holders of other authorizations in the Common Carrier, Mass Media, and Cable Services whose fees are not based on a subscriber, unit, or circuit count, we are proposing that fees be paid for any authorization issued on or before *October 1, 1998.*[24]

29. In the case of regulatees whose fees are based upon a subscriber, unit or circuit count, the number of a regulatees' subscribers, units or circuits on *December 31, 1998,* will be used to calculate the fee payment.[25]

E. Schedule of Regulatory Fees

30. The Commission's proposed Schedule of Regulatory Fees for FY 1999 is contained in Attachment D of this *NPRM.*

IV. Procedural Matters

A. Comment Period and Procedures

31. Pursuant to sections 1.415 and 1.419 of the Commission's rules, 47 CFR 1.415, 1.419, interested parties may file comments on or before April 19, 1999, and reply comments on or before April 29, 1999. Comments may be filed using the Commission's Electronic Comment Filing System (ECFS) or by filing paper copies.[26]

32. Comments filed through the ECFS can be sent as an electronic file via the Internet to <http://www.fcc.gov/e-file/ecfs.html>. Generally, only one copy of an electronic submission must be filed. However, if multiple docket or rulemaking numbers appear in the caption of this proceeding, commenters must transmit one electronic copy of the comments to each docket or rulemaking number referenced in the caption. In completing the transmittal screen, commenters should include their full name, Postal Service mailing address, and the applicable docket or rulemaking number. Parties may also submit an electronic comment by e-mail via Internet. To get filing instructions for e-mail comments, commenters should send an e-mail to ecfs@fcc.gov, and should include the following words in the body of the message, ''get form <your e-mail address.'' A sample form and directions will be sent in reply.

33. Parties who choose to file by paper must file an original and four

[23] Applicants for new, renewal and reinstatement licenses in the following services will be required to pay their regulatory fees in advance: Land Mobile Services, Microwave Services, Marine (Ship) Service, Marine (Coast) Service, Private Land Mobile (Other) Services, Aviation (Aircraft) Service, Aviation (Ground) Service, General Mobile Radio Service (GMRS).

[24] Where a license or authorization is transferred or assigned after October 1, 1998, the fee shall be paid by the licensee or holder of the authorization on the date that the payment is due.

[25] Cable system operators are to compute their subscribers as follows: Number of single family dwellings + number of individual households in multiple dwelling unit (apartments, condominiums, mobile home parks, etc.) paying at the basic subscriber rate + bulk rate customers + courtesy and free service. Note: Bulk-Rate Customers = Total annual bulk-rate charge divided by basic annual subscription rate for individual households. Cable system operators may base their count on ''a typical day in the last full week'' of December 1998, rather than on a count as of December 31, 1998.

[26] *Electronic Filing of Documents in Rulemaking Proceedings,* 63 FR 24121 (1998).

copies of each filing. If more than one docket or rulemaking number appear in the caption of this proceeding, commenters must submit two additional copies for each additional docket or rulemaking number. All filings must be sent to the Commission's Secretary, Magalie Roman Salas, Office of the Secretary, Federal Communications Commission, 445 12th Street, S.W., TW–A325, Washington, D.C. 20554.

34. Parties who choose to file by paper should also submit their comments on diskette. These diskettes should be submitted to: Terry Johnson, Office of Managing Director, Federal Communications Commission, 445 12th Street, S.W., 1–C807, Washington, D.C. 20554. Such a submission should be on a 3.5 inch diskette formatted in an IBM compatible format using WordPerfect 5.1 for Windows or compatible software. The diskette should be accompanied by a cover letter and should be submitted in ''read only'' mode. The diskette should be clearly labelled with the commenter's name, proceeding (including the lead docket number in this case MD Docket No. 98–200, type of pleading (comment or reply comment), date of submission, and the name of the electronic file on the diskette. The label should also include the following phrase ''Disk Copy—Not an Original.'' Each diskette should contain only one party's pleadings, preferably in a single electronic file. In addition, commenters must send diskette copies to the Commission's copy contractor, International Transcription Service, Inc., 1231 20th Street, N.W., Washington, D.C. 20037.

35. Documents filed in this proceeding will be available for public inspection during regular business hours in the FCC Reference Center, of the Federal Communications Commission, Room CY–A257, 445 12th Street, S.W., Washington, D.C. 20554, and will be placed on the Commission's ''Internet site.''

B. Ex Parte Rules

36. This is a non-restricted notice and comment rulemaking proceeding. *Ex parte* presentations are permitted, except during the Sunshine Agenda period, provided they are disclosed pursuant to the Commission's rules.[27]

C. Initial Regulatory Flexibility Analysis

37. As required by the Regulatory Flexibility Act,[28] the Commission has prepared an Initial Regulatory Flexibility Analysis (IRFA) of the possible impact on small entities of the proposals suggested in this document. The IRFA is set forth as Attachment A. Written public comments are requested with respect to the IRFA. These comments must be filed in accordance with the same filing deadlines for comments on the rest of the *NPRM,* but they must have a separate and distinct heading, designating the comments as responses to the IRFA. The Office of Public Affairs, Reference Operations Division, shall send a copy of this *NPRM,* including the IRFA, to the Chief Counsel for Advocacy of the Small Business Administration, in accordance with the Regulatory Flexibility Act.

D. Authority and Further Information

38. Authority for this proceeding is contained in sections 4(i) and (j), 9, and 303(r) of the Communications Act of 1934, as amended.[29] It is ordered that this *NPRM* is adopted. It is further ordered that the Commission's Office of Public Affairs, Reference Operations Division, shall send a copy of this *NPRM,* including the Initial Regulatory Flexibility Analysis, to the Chief Counsel for Advocacy of the Small Business Administration.

39. Further information about this proceeding may be obtained by contacting the Fees Hotline at (202) 418–0192.

Federal Communications Commission.

Magalie Roman Salas,

Secretary.

Attachment A—Initial Regulatory Flexibility Analysis

1. As required by the Regulatory Flexibility Act (RFA),[30] the Commission has prepared this Initial Regulatory Flexibility Analysis (IRFA) of the possible significant economic impact on small entities by the policies and rules proposed in the present *Notice of Proposed Rulemaking, In the Matter of Assessment and Collection of Regulatory Fees for Fiscal Year 1999.* Written public comments are requested on this IRFA. Comments must be identified as responses to the IRFA and must be filed by the deadlines for comments on the IRFA provided above in paragraph 31. The Commission will send a copy of the *NPRM,* including this IRFA, to the Chief Counsel for Advocacy of the Small Business Administration.[31] In addition, the *NPRM* and IRFA (or summaries thereof) will be published in the **Federal Register**.[32]

I. Need for, and Objectives of, the Proposed Rules

2. This rulemaking proceeding is initiated to obtain comments concerning the Commission's proposed amendment of its Schedule of Regulatory Fees. For Fiscal Year 1999, we intend to collect regulatory fees in the amount of $172,523,000, the amount that Congress has required the Commission to recover. The Commission seeks to collect the necessary amount through its proposed revised fees, as contained in the attached Schedule of Regulatory Fees, in the most efficient manner possible and without undue burden to the public.

II. Legal Basis

3. This action, including publication of proposed rules, is authorized under Sections (4)(i) and (j), 9, and 303(r) of the Communications Act of 1934, as amended.[33]

III. Description and Estimate of the Number of Small Entities to Which the Proposed Rules Will Apply

4. The RFA directs agencies to provide a description of and, where feasible, an estimate of the number of small entities that may be affected by the proposed rules, if adopted.[34] The RFA generally defines the term ''small entity'' as having the same meaning as the terms ''small business,'' ''small organization,'' and ''small governmental jurisdiction.''[35] In addition, the term ''small business'' has the same meaning as the term ''small business concern'' under the Small Business Act.[36] A small business concern is one which: (1) is independently owned and operated; (2) is not dominant in its field of operation; and (3) satisfies any additional criteria established by the Small Business Administration (SBA).[37] A small organization is generally ''any not-for-profit enterprise which is independently owned and operated and is not dominant in its field.''[38] Nationwide, as of 1992, there were approximately

[27] 47 CFR 1.1202, 1.1203 and 1026(a).

[28] 5 U.S.C. 603.

[29] 47 U.S.C. 154(i)–(j), 159, & 303(r).

[30] 5 U.S.C. 603. The RFA, 5 U.S.C. 601 *et seq.,* has been amended by the Contract With America Advancement Act of 1996, Public Law No. 104–121, 110 Stat. 847 (1996) (CWAAA). Title II of the CWAAA is the Small Business Regulatory Enforcement Fairness Act of 1996 (SBREFA).

[31] 5 U.S.C. 603(a).

[32] *Id.*

[33] 47 U.S.C. 154(i) and (j), 159, and 303(r).

[34] 5 U.S.C. 603(b)(3).

[35] *Id.* 601(6).

[36] 5 U.S.C. 601(3) (incorporating by reference the definition of ''small business concern'' in 15 U.S.C. 632). Pursuant to the RFA, the statutory definition of a small business applies ''unless an agency, after consultation with the Office of Advocacy of the Small Business Administration and after opportunity for public comment, establishes one or more definitions of such term which are appropriate to the activities of the agency and publishes such definition(s) in the **Federal Register**.'' 5 U.S.C. 601(3).

[37] Small Business Act, 15 U.S.C. 632 (1996).

[38] 5 U.S.C. 601(4).

275,801 small organizations.[39] ''Small governmental jurisdiction'' generally means ''governments of cities, counties, towns, townships, villages, school districts, or special districts, with a population of less than 50,000.'' [40] As of 1992, there were approximately 85,006 such jurisdictions in the United States.[41] This number includes 38,978 counties, cities, and towns; of these, 37,566, or 96 percent, have populations of fewer than 50,000.[42] The Census Bureau estimates that this ratio is approximately accurate for all governmental entities. Thus, of the 85,006 governmental entities, we estimate that 81,600 (91 percent) are small entities. We further describe and estimate the number of small entity licensees and regulatees that may be affected by the proposed rules, if adopted.

Cable Services or Systems

5. The SBA has developed a definition of small entities for cable and other pay television services, which includes all such companies generating $11 million or less in revenue annually.[43] This definition includes cable systems operators, closed circuit television services, direct broadcast satellite services, multipoint distribution systems, satellite master antenna systems and subscription television services. According to the Census Bureau data from 1992, there were 1,788 total cable and other pay television services and 1,423 had less than $11 million in revenue.[44]

6. The Commission has developed its own definition of a small cable system operator for the purposes of rate regulation. Under the Commission's rules, a ''small cable company'' is one serving fewer than 400,000 subscribers nationwide.[45] Based on our most recent information, we estimate that there were 1,439 cable operators that qualified as small cable system operators at the end of 1995.[46] Since then, some of those companies may have grown to serve over 400,000 subscribers, and others may have been involved in transactions that caused them to be combined with other cable operators. Consequently, we estimate that there are fewer than 1,439 small entity cable system operators.

7. The Communications Act also contains a definition of a small cable system operator, which is ''a cable operator that, directly or through an affiliate, serves in the aggregate fewer than 1 percent of all subscribers in the United States and is not affiliated with any entity or entities whose gross annual revenues in the aggregate exceed $250,000,000.'' [47] The Commission has determined that there are 66,000,000 subscribers in the United States. Therefore, we found that an operator serving fewer than 660,000 subscribers shall be deemed a small operator, if its annual revenues, when combined with the total annual revenues of all of its affiliates, do not exceed $250 million in the aggregate.[48] Based on available data, we find that the number of cable operators serving 660,000 subscribers or less totals 1,450.[49] We do not request nor do we collect information concerning whether cable system operators are affiliated with entities whose gross annual revenues exceed $250,000,000,[50] and thus are unable at this time to estimate with greater precision the number of cable system operators that would qualify as small cable operators under the definition in the Communications Act. It should be further noted that recent industry estimates project that there will be a total 64,000,000 subscribers, and we have based our fee revenue estimates on that figure.

8. Other Pay Services. Other pay television services are also classified under Standard Industrial Classification (SIC) 4841, which includes cable systems operators, closed circuit television services, direct broadcast satellite services (DBS),[51] multipoint distribution systems (MDS),[52] satellite master antenna systems (SMATV), and subscription television services.

Common Carrier Services and Related Entities

9. The most reliable source of information regarding the total numbers of certain common carrier and related providers nationwide, as well as the numbers of commercial wireless entities, appears to be data the Commission publishes annually in its *Telecommunications Industry Revenue* report, regarding the Telecommunications Relay Service (TRS).[53] According to data in the most recent report, there are 3,459 interstate carriers.[54] These carriers include, *inter alia*, local exchange carriers, wireline carriers and service providers, interexchange carriers, competitive access providers, operator service providers, pay telephone operators, providers of telephone toll service, providers of telephone exchange service, and resellers.

10. The SBA has defined establishments engaged in providing ''Radiotelephone Communications'' and ''Telephone Communications, Except Radiotelephone'' to be small businesses when they have no more than 1,500 employees.[55] We discuss the total estimated number of telephone companies falling within the two categories and the number of small businesses in each, and we then attempt to refine further those estimates to correspond with the categories of telephone companies that are commonly used under our rules.

11. Although some affected incumbent local exchange carriers (ILECs) may have 1,500 or fewer employees, we do not believe that such entities should be considered small entities within the meaning of the RFA because they are either dominant in their field of operations or are not independently owned and operated, and therefore by definition not ''small entities'' or ''small business concerns'' under the RFA. Accordingly, our use of the terms ''small entities'' and ''small businesses'' does not encompass small ILECs. Out of an abundance of caution, however, for regulatory flexibility analysis purposes, we will separately consider small ILECs within this

[39] 1992 Economic Census, U.S. Bureau of the Census, Table 6 (special tabulation of data under contract to Office of Advocacy of the U.S. Small Business Administration).

[40] 5 U.S.C. 601(5).

[41] U.S. Dept. of Commerce, Bureau of the Census, ''1992 Census of Governments.''

[42] *Id*.

[43] 13 CFR 121.201, SIC code 4841.

[44] *1992 Economic Census Industry and Enterprise Receipts Size Report*, Table 2D, SIC code 4841 (U.S. Bureau of the Census data under contract to the Office of Advocacy of the U.S. Small Business Administration).

[45] 47 CFR 76.901(e). The Commission developed this definition based on its determination that a small cable system operator is one with annual revenues of $100 million or less. *Implementation of Sections of the 1992 Cable Act: Rate Regulation, Sixth Report and Order and Eleventh Order on Reconsideration*, 10 FCC Rcd 7393 (1995), 60 FR 10534 (Feb. 27, 1995).

[46] Paul Kagan Associates, Inc., *Cable TV Investor*, Feb. 29, 1996 (based on figures for Dec. 30, 1995).

[47] 47 U.S.C. 543(m)(2).

[48] *Id*. 76.1403(b).

[49] Paul Kagan Associates, Inc., *Cable TV Investor*, Feb. 29, 1996 (based on figures for Dec. 30, 1995).

[50] We do receive such information on a case-by-case basis only if a cable operator appeals a local franchise authority's finding that the operator does not qualify as a small cable operator pursuant to section 76.1403(b) of the Commission's rules. *See* 47 CFR 76.1403(d).

[51] Direct Broadcast Services (DBS) are discussed with the international services, *infra*.

[52] Multipoint Distribution Services (MDS) are discussed with the mass media services, *infra*.

[53] FCC, Telecommunications Industry Revenue: TRS Fund Worksheet Data, Figure 2 (Number of Carriers Paying Into the TRS Fund by Type of Carrier) (Nov. 1997) (*Telecommunications Industry Revenue*).

[54] *Id*.

[55] 13 CFR 121.201, Standard Industrial Classification (SIC) codes 4812 and 4813. *See also* Executive Office of the President, Office of Management and Budget, *Standard Industrial Classification Manual* (1987).

analysis and use the term ''small ILECs'' to refer to any ILECs that arguably might be defined by the SBA as ''small business concerns.'' [56]

12. Total Number of Telephone Companies Affected. The U.S. Bureau of the Census (''Census Bureau'') reports that, at the end of 1992, there were 3,497 firms engaged in providing telephone services, as defined therein, for at least one year.[57] This number contains a variety of different categories of carriers, including local exchange carriers, interexchange carriers, competitive access providers, cellular carriers, mobile service carriers, operator service providers, pay telephone operators, personal communications services providers, covered specialized mobile radio providers, and resellers. It seems certain that some of those 3,497 telephone service firms may not qualify as small entities or small ILECs because they are not ''independently owned and operated.'' [58] For example, a PCS provider that is affiliated with an interexchange carrier having more than 1,500 employees would not meet the definition of a small business. It is reasonable to conclude that fewer than 3,497 telephone service firms are small entity telephone service firms or small ILECs that may be affected by the proposed rules, if adopted.

13. Wireline Carriers and Service Providers. The SBA has developed a definition of small entities for telephone communications companies except radiotelephone (wireless) companies. The Census Bureau reports that there were 2,321 such telephone companies in operation for at least one year at the end of 1992.[59] According to the SBA's definition, a small business telephone company other than a radiotelephone company is one employing no more than 1,500 persons.[60] All but 26 of the 2,321 non-radiotelephone companies listed by the Census Bureau were reported to have fewer than 1,000 employees. Thus, even if all 26 of those companies had more than 1,500 employees, there would still be 2,295 non-radiotelephone companies that might qualify as small entities or small ILECs. We do not have data specifying the number of these carriers that are not independently owned and operated, and thus are unable at this time to estimate with greater precision the number of wireline carriers and service providers that would qualify as small business concerns under the SBA's definition. Consequently, we estimate that fewer than 2,295 small telephone communications companies other than radiotelephone companies are small entities or small ILECs that may be affected by the proposed rules, if adopted.

14. Local Exchange Carriers. Neither the Commission nor the SBA has developed a definition for small providers of local exchange services (LECs). The closest applicable definition under the SBA rules is for telephone communications companies other than radiotelephone (wireless) companies.[61] According to the most recent *Telecommunications Industry Revenue* data, 1,371 carriers reported that they were engaged in the provision of local exchange services.[62] We do not have data specifying the number of these carriers that are either dominant in their field of operations, are not independently owned and operated, or have more than 1,500 employees, and thus are unable at this time to estimate with greater precision the number of LECs that would qualify as small business concerns under the SBA's definition. Consequently, we estimate that fewer than 1,371 providers of local exchange service are small entities or small ILECs that may be affected by the proposed rules, if adopted.

15. Interexchange Carriers. Neither the Commission nor the SBA has developed a definition of small entities specifically applicable to providers of interexchange services (IXCs). The closest applicable definition under the SBA rules is for telephone communications companies other than radiotelephone (wireless) companies.[63] According to the most recent *Telecommunications Industry Revenue* data, 143 carriers reported that they were engaged in the provision of interexchange services.[64] We do not have data specifying the number of these carriers that are not independently owned and operated or have more than 1,500 employees, and thus are unable at this time to estimate with greater precision the number of IXCs that would qualify as small business concerns under the SBA's definition. Consequently, we estimate that there are fewer than 143 small entity IXCs that may be affected by the proposed rules, if adopted.

16. Competitive Access Providers. Neither the Commission nor the SBA has developed a definition of small entities specifically applicable to competitive access services providers (CAPs). The closest applicable definition under the SBA rules is for telephone communications companies other than except radiotelephone (wireless) companies.[65] According to the most recent *Telecommunications Industry Revenue* data, 109 carriers reported that they were engaged in the provision of competitive access services.[66] We do not have data specifying the number of these carriers that are not independently owned and operated, or have more than 1,500 employees, and thus are unable at this time to estimate with greater precision the number of CAPs that would qualify as small business concerns under the SBA's definition. Consequently, we estimate that there are fewer than 109 small entity CAPs that may be affected by the proposed rules, if adopted.

17. Operator Service Providers. Neither the Commission nor the SBA has developed a definition of small entities specifically applicable to providers of operator services. The closest applicable definition under the SBA rules is for telephone communications companies other than radiotelephone (wireless) companies.[67] According to the most recent *Telecommunications Industry Revenue* data, 27 carriers reported that they were engaged in the provision of operator services.[68] We do not have data specifying the number of these carriers that are not independently owned and operated or have more than 1,500 employees, and thus are unable at this time to estimate with greater precision the number of operator service providers that would qualify as small business concerns under the SBA's definition. Consequently, we estimate that there are fewer than 27 small entity operator service providers that may be affected by the proposed rules, if adopted.

18. Pay Telephone Operators. Neither the Commission nor the SBA has

[56] 13 CFR 121.201, SIC code 4813. Since the time of the Commission's 1996 decision, *Implementation of the Local Competition Provisions in the Telecommunications Act of 1996, First Report and Order,* 11 FCC Rcd 15499, 16144–45 (1996), 61 FR 45476 (Aug. 29, 1996), the Commission has consistently addressed in its regulatory flexibility analyses the impact of its rules on such ILECs.

[57] U.S. Department of Commerce, Bureau of the Census, *1992 Census of Transportation, Communications, and Utilities: Establishment and Firm Size,* at Firm Size 1–123 (1995) (*1992 Census*).

[58] *See generally* 15 U.S.C. 632(a)(1).

[59] *1992 Census, supra,* at Firm Size 1–123.

[60] 13 CFR 121.201, SIC code 4813.

[61] *Id.*

[62] *Telecommunications Industry Revenue,* Figure 2.

[63] 13 CFR 121.201, SIC code 4813.

[64] *Telecommunications Industry Revenue,* Figure 2.

[65] 13 CFR 121.201, SIC code 4813.

[66] *Telecommunications Industry Revenue,* Figure 2.

[67] 13 CFR 121.201, SIC code 4813.

[68] *Telecommunications Industry Revenue,* Figure 2.

developed a definition of small entities specifically applicable to pay telephone operators. The closest applicable definition under SBA rules is for telephone communications companies other than radiotelephone (wireless) companies.[69] According to the most recent *Telecommunications Industry Revenue* data, 441 carriers reported that they were engaged in the provision of pay telephone services.[70] We do not have data specifying the number of these carriers that are not independently owned and operated or have more than 1,500 employees, and thus are unable at this time to estimate with greater precision the number of pay telephone operators that would qualify as small business concerns under the SBA's definition. Consequently, we estimate that there are fewer than 441 small entity pay telephone operators that may be affected by the proposed rules, if adopted.

19. Resellers (including debit card providers). Neither the Commission nor the SBA has developed a definition of small entities specifically applicable to resellers. The closest applicable SBA definition for a reseller is a telephone communications company other than radiotelephone (wireless) companies.[71] According to the most recent *Telecommunications Industry Revenue* data, 339 reported that they were engaged in the resale of telephone service.[72] We do not have data specifying the number of these carriers that are not independently owned and operated or have more than 1,500 employees, and thus are unable at this time to estimate with greater precision the number of resellers that would qualify as small business concerns under the SBA's definition. Consequently, we estimate that there are fewer than 339 small entity resellers that may be affected by the proposed rules, if adopted.

20. 800 Service Subscribers.[73] Neither the Commission nor the SBA has developed a definition of small entities specifically applicable to 800 service (''toll free'') subscribers. The most reliable source of information regarding the number of 800 service subscribers appears to be data the Commission collects on the 800 numbers in use.[74] According to our most recent data, at the end of 1995, the number of 800 numbers in use was 6,987,063. Similarly, the most reliable source of information regarding the number of 888 service subscribers appears to be data the Commission collects on the 888 numbers in use.[75] According to our most recent data, at the end of August 1996, the number of 888 numbers that had been assigned was 2,014,059. We do not have data specifying the number of these subscribers that are not independently owned and operated or have more than 1,500 employees, and thus are unable at this time to estimate with greater precision the number of toll free subscribers that would qualify as small business concerns under the SBA's definition. Consequently, we estimate that there are fewer than 6,987,063 small entity 800 subscribers and fewer than 2,014,059 small entity 888 subscribers that may be affected by the proposed rules, if adopted.

International Services

21. The Commission has not developed a definition of small entities applicable to licensees in the international services. Therefore, the applicable definition of small entity is generally the definition under the SBA rules applicable to Communications Services, Not Elsewhere Classified (NEC).[76] This definition provides that a small entity is expressed as one with $11.0 million or less in annual receipts.[77] According to the Census Bureau, there were a total of 848 communications services providers, NEC, in operation in 1992, and a total of 775 had annual receipts of less than $9.999 million.[78] The Census report does not provide more precise data.

22. International Broadcast Stations. Commission records show that there are 20 international broadcast station licensees. We do not request nor collect annual revenue information, and thus are unable to estimate the number of international broadcast licensees that would constitute a small business under the SBA definition. However, the Commission estimates that only six international broadcast stations are subject to regulatory fee payments.

23. International Public Fixed Radio (Public and Control Stations). There are 3 licensees in this service subject to payment of regulatory fees. We do not request nor collect annual revenue information, and thus are unable to estimate the number of international broadcast licensees that would constitute a small business under the SBA definition.

24. Fixed Satellite Transmit/Receive Earth Stations. There are approximately 3100 earth station authorizations, a portion of which are Fixed Satellite Transmit/Receive Earth Stations. We do not request nor collect annual revenue information, and thus are unable to estimate the number of the earth stations that would constitute a small business under the SBA definition.

25. Fixed Satellite Small Transmit/Receive Earth Stations. There are 3100 earth station authorizations, a portion of which are Fixed Satellite Small Transmit/Receive Earth Stations. We do not request nor collect annual revenue information, and thus are unable to estimate the number of fixed satellite transmit/receive earth stations that may constitute a small business under the SBA definition.

26. Fixed Satellite Very Small Aperture Terminal (VSAT) Systems. These stations operate on a primary basis, and frequency coordination with terrestrial microwave systems is not required. Thus, a single ''blanket'' application may be filed for a specified number of small antennas and one or more hub stations. The Commission has processed 377 applications. We do not request nor collect annual revenue information, and thus are unable to estimate the number of VSAT systems that would constitute a small business under the SBA definition.

27. Mobile Satellite Earth Stations. There are 11 licensees. We do not request nor collect annual revenue information, and thus are unable to estimate of the number of mobile satellite earth stations that would constitute a small business under the SBA definition.

28. Radio Determination Satellite Earth Stations. There are four licensees. We do not request nor collect annual revenue information, and thus are unable to estimate the number of radio determination satellite earth stations that would constitute a small business under the SBA definition.

29. Space Stations (Geostationary). Commission records reveal that there are 43 Geostationary Space Station licensees. We do not request nor collect annual revenue information, and thus are unable to estimate the number of geostationary space stations that would constitute a small business under the SBA definition.

[69] 13 CFR 121.201, SIC code 4813.

[70] *Telecommunications Industry Revenue*, Figure 2.

[71] 13 CFR 121.201, SIC code 4813.

[72] *Telecommunications Industry Revenue*, Figure 2.

[73] We include all toll-free number subscribers in this category, including 888 numbers.

[74] FCC, CCB Industry Analysis Division, *FCC Releases, Study on Telephone Trends*, Tbl. 20 (May 16, 1996).

[75] FCC, CCB Industry Analysis Division, *Long Distance Carrier Code Assignments*, p. 80, Tbl. 10B (Oct. 18, 1996).

[76] An exception is the Direct Broadcast Satellite (DBS) Service, *infra*.

[77] 13 CFR 120.121, SIC code 4899.

[78] 1992 *Economic Census Industry and Enterprise Receipts Size Report*, Table 2D, SIC code 4899 (U.S. Bureau of the Census data under contract to the Office of Advocacy of the U.S. Small Business Administration).

30. Space Stations (Non-Geostationary). There are 12 Non-Geostationary Space Station licensees, of which only two systems are operational. We do not request nor collect annual revenue information, and thus are unable to estimate of the number of non-geostationary space stations that would constitute a small business under the SBA definition.

31. Direct Broadcast Satellites. Because DBS provides subscription services, DBS falls within the SBA-recognized definition of ''Cable and Other Pay Television Services.''[79] This definition provides that a small entity is one with $11.0 million or less in annual receipts.[80] As of December 1996, there were eight DBS licensees. However, the Commission does not collect annual revenue data for DBS and, therefore, is unable to ascertain the number of small DBS licensees that could be impacted by these proposed rules. Although DBS service requires a great investment of capital for operation, there are several new entrants in this field that may not yet have generated $11 million in annual receipts, and therefore may be categorized as small businesses, if independently owned and operated.

Mass Media Services

32. Commercial Radio and Television Services. The proposed rules and policies will apply to television broadcasting licensees and radio broadcasting licensees.[81] The SBA defines a television broadcasting station that has $10.5 million or less in annual receipts as a small business.[82] Television broadcasting stations consist of establishments primarily engaged in broadcasting visual programs by television to the public, except cable and other pay television services.[83] Included in this industry are commercial, religious, educational, and other television stations.[84] Also included are establishments primarily engaged in television broadcasting and which produce taped television program materials.[85] Separate establishments primarily engaged in producing taped television program materials are classified under another SIC number.[86] There were 1,509 television stations operating in the nation in 1992.[87] That number has remained fairly constant as indicated by the approximately 1,564 operating television broadcasting stations in the nation as of December 31, 1997.[88] For 1992,[89] the number of television stations that produced less than $10.0 million in revenue was 1,155 establishments.[90] Only commercial stations are subject to regulatory fees.

33. Additionally, the Small Business Administration defines a radio broadcasting station that has $5 million or less in annual receipts as a small business.[91] A radio broadcasting station is an establishment primarily engaged in broadcasting aural programs by radio to the public.[92] Included in this industry are commercial, religious, educational, and other radio stations.[93] Radio broadcasting stations which primarily are engaged in radio broadcasting and which produce radio program materials are similarly included.[94] However, radio stations which are separate establishments and are primarily engaged in producing radio program material are classified under another SIC number.[95] The 1992 Census indicates that 96 percent (5,861 of 6,127) radio station establishments produced less than $5 million in revenue in 1992.[96] Official Commission records indicate that 11,334 individual radio stations were operating in 1992.[97] As of December 31, 1997, Commission records indicate that 12,270 radio stations were operating, of which 7,465 were FM stations.[98] Only commercial stations are subject to regulatory fees.

34. Thus, the proposed rules, if adopted, will affect approximately 1,558 full power television stations, approximately 1,200 of which are considered small businesses.[99] Additionally, the proposed rules will affect some 12,156 full power radio stations, approximately 11,670 of which are small businesses.[100] These estimates may overstate the number of small entities because the revenue figures on which they are based do not include or aggregate revenues from non-television or non-radio affiliated companies. There are also 1,952 low power television stations (LPTV).[101] Given the nature of this service, we will presume that all LPTV licensees qualify as small entities under the SBA definition.

Alternative Classification of Small Stations

35. An alternative way to classify small radio and television stations is by number of employees. The Commission currently applies a standard based on the number of employees in administering its Equal Employment Opportunity Rule (EEO) for broadcasting.[102] Thus, radio or

[79] 13 CFR 120.121, SIC code 4841.

[80] 13 CFR 121.201, SIC code 4841.

[81] While we tentatively believe that the SBA's definition of ''small business'' greatly overstates the number of radio and television broadcast stations that are small businesses and is not suitable for purposes of determining the impact of the proposals on small television and radio stations, for purposes of this *Notice* we utilize the SBA's definition in determining the number of small businesses to which the proposed rules would apply. We reserve the right to adopt, in the future, a more suitable definition of ''small business'' as applied to radio and television broadcast stations or other entities subject to the proposed rules in this *Notice*, and to consider further the issue of the number of small entities that are radio and television broadcasters or other small media entities. *See Report and Order in MM Docket No. 93–48 (Children's Television Programming)*, 11 FCC Rcd 10660, 10737–38 (1996), 61 FR 43981 (Aug. 27, 1996), *citing* 5 U.S.C. 601(3).

[82] 13 CFR 121.201, SIC code 4833.

[83] Economics and Statistics Administration, Bureau of Census, U.S. Department of Commerce, *1992 Census of Transportation, Communications and Utilities, Establishment and Firm Size, Series UC92–S–1,* Appendix A–9 (1995) (*1992 Census, Series UC92–S–1*).

[84] *Id.; see* Executive Office of the President, Office of Management and Budget, *Standard Industrial Classification Manual* (1987), at 283, which describes ''Television Broadcasting Stations'' (SIC code 4833) as: ''Establishments primarily engaged in broadcasting visual programs by television to the public, except cable and other pay television services. Included in this industry are commercial, religious, educational and other television stations. Also included here are establishments primarily engaged in television broadcasting and which produce taped television program materials.''

[85] *1992 Census, Series UC92–S–1,* at Appendix A–9.

[86] *Id.,* SIC code 7812 (Motion Picture and Video Tape Production); SIC code 7922 (Theatrical Producers and Miscellaneous Theatrical Services) (producers of live radio and television programs).

[87] FCC News Release No. 31327 (Jan. 13, 1993); *1992 Census, Series UC92–S–1,* at Appendix A–9.

[88] FCC News Release, ''Broadcast Station Totals as of Dec. 31, 1997.''

[89] A census to determine the estimated number of Communications establishments is performed every five years, in years ending with a ''2'' or ''7.'' *See 1992 Census, Series UC92–S–1,* at III.

[90] The amount of $10 million was used to estimate the number of small business establishments because the relevant Census categories stopped at $9,999,999 and began at $10,000,000. No category for $10.5 million existed. Thus, the number is as accurate as it is possible to calculate with the available information.

[91] 13 CFR 121.201, SIC code 4832.

[92] *1992 Census, Series UC92–S–1,* at Appendix A–9.

[93] *Id.*

[94] *Id.*

[95] *Id.*

[96] The Census Bureau counts radio stations located at the same facility as one establishment. Therefore, each co-located AM/FM combination counts as one establishment.

[97] FCC News Release, No. 31327 (Jan. 13, 1993).

[98] FCC News Release, ''Broadcast Station Totals as of December 31, 1997.''

[99] We use the 77 percent figure of TV stations operating at less than $10 million for 1992 and apply it to the 1997 total of 1558 TV stations to arrive at 1,200 stations categorized as small businesses.

[100] We use the 96% figure of radio station establishments with less than $5 million revenue from the Census data and apply it to the 12,088 individual station count to arrive at 11,605 individual stations as small businesses.

[101] FCC News Release, No. 7033 (Mar. 6, 1997).

[102] The Commission's definition of a small broadcast station for purposes of applying its EEO rules was adopted prior to the requirement of approval by the SBA pursuant to section 3(a) of the

Continued

television stations with fewer than five full-time employees are exempted from certain EEO reporting and record keeping requirements.[103] We estimate that the total number of broadcast stations with 4 or fewer employees is approximately 4,239.[104]

Auxiliary, Special Broadcast and Other Program Distribution Services

36. This service involves a variety of transmitters, generally used to relay broadcast programming to the public (through translator and booster stations) or within the program distribution chain (from a remote news gathering unit back to the station). The Commission has not developed a definition of small entities applicable to broadcast auxiliary licensees. Therefore, the applicable definitions of small entities are those, noted previously, under the SBA rules applicable to radio broadcasting stations and television broadcasting stations.[105]

37. There are currently 2,720 FM translators and boosters, 4,952 TV translators.[106] The FCC does not collect financial information on any broadcast facility and the Department of Commerce does not collect financial information on these auxiliary broadcast facilities. We believe, however, that most, if not all, of these auxiliary facilities could be classified as small businesses by themselves. We also recognize that most translators and boosters are owned by a parent station which, in some cases, would be covered by the revenue definition of small business entity discussed above. These stations would likely have annual revenues that exceed the SBA maximum to be designated as a small business (either $5 million for a radio station or $10.5 million for a TV station). Furthermore, they do not meet the Small Business Act's definition of a ''small business concern'' because they are not independently owned and operated.[107]

38. Multipoint Distribution Service (MDS). This service involves a variety of transmitters, which are used to relay programming to the home or office, similar to that provided by cable television systems.[108] In connection with the 1996 MDS auction the Commission defined small businesses as entities that had annual average gross revenues for the three preceding years not in excess of $40 million.[109] This definition of a small entity in the context of MDS auctions has been approved by the SBA.[110] These stations were licensed prior to implementation of Section 309(j) of the Communications Act of 1934, as amended.[111] Licenses for new MDS facilities are now awarded to auction winners in Basic Trading Areas (BTAs) and BTA-like areas.[112] The MDS auctions resulted in 67 successful bidders obtaining licensing opportunities for 493 BTAs. Of the 67 auction winners, 61 meet the definition of a small business. There are 1,573 previously authorized and proposed MDS stations currently licensed. Thus, we conclude that there are 1,634 MDS providers that are small businesses as deemed by the SBA and the Commission's auction rules. It is estimated, however, that only 1,650 MDS licensees are subject to regulatory fees and the number which are small businesses is unknown.

Wireless and Commercial Mobile Services

39. Cellular Licensees. Neither the Commission nor the SBA has developed a definition of small entities applicable to cellular licensees. Therefore, the applicable definition of small entity is the definition under the SBA rules applicable to radiotelephone (wireless) companies. This provides that a small entity is a radiotelephone company employing no more than 1,500 persons.[113] According to the Bureau of the Census, only twelve radiotelephone firms out of a total of 1,178 such firms which operated during 1992 had 1,000 or more employees.[114] Therefore, even if all twelve of these firms were cellular telephone companies, nearly all cellular carriers were small businesses under the SBA's definition. In addition, we note that there are 1,758 cellular licenses; however, a cellular licensee may own several licenses. In addition, according to the most recent Telecommunications Industry Revenue data, 804 carriers reported that they were engaged in the provision of either cellular service or Personal Communications Service (PCS) services, which are placed together in the data.[115] We do not have data specifying the number of these carriers that are not independently owned and operated or have more than 1,500 employees, and thus are unable at this time to estimate with greater precision the number of cellular service carriers that would qualify as small business concerns under the SBA's definition. Consequently, we estimate that there are fewer than 804 small cellular service carriers that may be affected by the proposed rules, if adopted.

40. 220 MHz Radio Service—Phase I Licensees. The 220 MHz service has both Phase I and Phase II licenses. Phase I licensing was conducted by lotteries in 1992 and 1993. There are approximately 1,515 such non-nationwide licensees and four nationwide licensees currently authorized to operate in the 220 MHz band. The Commission has not developed a definition of small entities specifically applicable to such incumbent 220 MHz Phase I licensees. To estimate the number of such licensees that are small businesses, we apply the definition under the SBA rules applicable to Radiotelephone Communications companies. This definition provides that a small entity is a radiotelephone company employing

Small Business Act, 15 U.S.C. 632(a), as amended by section 222 of the Small Business Credit and Business Opportunity Enhancement Act of 1992, Public Law 102–366, 222(b)(1), 106 Stat. 999 (1992), as further amended by the Small Business Administration Reauthorization and Amendments Act of 1994, Public Law 103–403, 301, 108 Stat. 4187 (1994). However, this definition was adopted after public notice and the opportunity for comment. *See Report and Order* in Docket No. 18244, 23 FCC 2d 430 (1970), 35 FR 8925 (Jun. 6, 1970).

[103] *See, e.g.,* 47 CFR 73.3612 (Requirement to file annual employment reports on Form 395 applies to licensees with five or more full-time employees); *First Report and Order* in Docket No. 21474 *(Amendment of Broadcast Equal Employment Opportunity Rules and FCC Form 395),* 70 FCC 2d 1466 (1979), 50 FR 50329 (Dec. 10, 1985). The Commission is currently considering how to decrease the administrative burdens imposed by the EEO rule on small stations while maintaining the effectiveness of our broadcast EEO enforcement. *Order and Notice of Proposed Rule Making in MM Docket No. 96–16 (Streamlining Broadcast EEO Rule and Policies, Vacating the EEO Forfeiture Policy Statement and Amending Section 1.80 of the Commission's Rules to Include EEO Forfeiture Guidelines),* 11 FCC Rcd 5154 (1996), 61 FR 9964 (Mar. 12, 1996). One option under consideration is whether to define a small station for purposes of affording such relief as one with ten or fewer full-time employees.

[104] Compilation of 1994 Broadcast Station Annual Employment Reports (FCC Form B), Equal Opportunity Employment Branch, Mass Media Bureau, FCC.

[105] 13 CFR 121.201, SIC code 4832.

[106] FCC News Release, *Broadcast Station Totals as of December 31, 1996,* No. 71831 (Jan. 21, 1997).

[107] 15 U.S.C. 632.

[108] For purposes of this item, MDS includes both the single channel Multipoint Distribution Service (MDS) and the Multichannel Multipoint Distribution Service (MMDS).

[109] 47 CFR 1.2110(a)(1).

[110] *Amendment of Parts 21 and 74 of the Commission's Rules with Regard to Filing Procedures in the Multipoint Distribution Service and in the Instructional Television Fixed Service and Implementation of Section 309(j) of the Communications Act—Competitive Bidding,* 10 FCC Rcd 9589 (1995), 60 FR 36524 (Jul. 17, 1995).

[111] 47 U.S.C. 309(j).

[112] *Id.* A Basic Trading Area (BTA) is the geographic area by which the Multipoint Distribution Service is licensed. *See* Rand McNally *1992 Commercial Atlas and Marketing Guide,* 123rd Edition, pp. 36–39.

[113] 13 CFR 121.201, SIC code 4812.

[114] *1992 Census, Series UC92–S–1,* at Table 5, SIC code 4812.

[115] *Telecommunications Industry Revenue,* Figure 2.

no more than 1,500 persons.[116] According to the Bureau of the Census, only 12 radiotelephone firms out of a total of 1,178 such firms which operated during 1992 had 1,000 or more employees.[117] Therefore, if this general ratio continues to 1999 in the context of Phase I 220 MHz licensees, we estimate that nearly all such licensees are small businesses under the SBA's definition.

41. 220 MHz Radio Service—Phase II Licensees. The Phase II 220 MHz service is a new service, and is subject to spectrum auctions. In the 220 MHz *Third Report and Order* we adopted criteria for defining small businesses and very small businesses for purposes of determining their eligibility for special provisions such as bidding credits and installment payments.[118] We have defined a small business as an entity that, together with its affiliates and controlling principals, has average gross revenues not exceeding $15 million for the preceding three years. Additionally, a very small business is defined as an entity that, together with its affiliates and controlling principals, has average gross revenues that are not more than $3 million for the preceding three years.[119] The SBA has approved these definitions.[120] An auction of Phase II licenses commenced on September 15, 1998, and closed on October 22, 1998.[121] 908 licenses were auctioned in 3 different-sized geographic areas: three nationwide licenses, 30 Regional Economic Area Group Licenses, and 875 Economic Area (EA) Licenses. Of the 908 licenses auctioned, 693 were sold. Companies claiming small business status won: one of the Nationwide licenses, 67% of the Regional licenses, and 54% of the EA licenses. As of January 22, 1999, the Commission announced that it was prepared to grant 654 of the Phase II licenses won at auction.[122] A re-auction of the remaining, unsold licenses is likely to take place during calendar year 1999.

42. Private and Common Carrier Paging. The Commission has proposed a two-tier definition of small businesses in the context of auctioning licenses in the Common Carrier Paging and exclusive Private Carrier Paging services. Under the proposal, a small business will be defined as either (1) an entity that, together with its affiliates and controlling principals, has average gross revenues for the three preceding years of not more than $3 million, or (2) an entity that, together with affiliates and controlling principals, has average gross revenues for the three preceding calendar years of not more than $15 million. Because the SBA has not yet approved this definition for paging services, we will utilize the SBA's definition applicable to radiotelephone companies, *i.e.*, an entity employing no more than 1,500 persons.[123] At present, there are approximately 24,000 Private Paging licenses and 74,000 Common Carrier Paging licenses. According to the most recent *Telecommunications Industry Revenue* data, 172 carriers reported that they were engaged in the provision of either paging or ''other mobile'' services, which are placed together in the data.[124] We do not have data specifying the number of these carriers that are not independently owned and operated or have more than 1,500 employees, and thus are unable at this time to estimate with greater precision the number of paging carriers that would qualify as small business concerns under the SBA's definition. Consequently, we estimate that there are fewer than 172 small paging carriers that may be affected by the proposed rules, if adopted. We estimate that the majority of private and common carrier paging providers would qualify as small entities under the SBA definition.

43. Mobile Service Carriers. Neither the Commission nor the SBA has developed a definition of small entities specifically applicable to mobile service carriers, such as paging companies. As noted above in the section concerning paging service carriers, the closest applicable definition under the SBA rules is that for radiotelephone (wireless) companies,[125] and the most recent *Telecommunications Industry Revenue* data shows that 172 carriers reported that they were engaged in the provision of either paging or ''other mobile'' services.[126] Consequently, we estimate that there are fewer than 172 small mobile service carriers that may be affected by the proposed rules, if adopted.

44. Broadband Personal Communications Service (PCS). The broadband PCS spectrum is divided into six frequency blocks designated A through F, and the Commission has held auctions for each block. The Commission defined ''small entity'' for Blocks C and F as an entity that has average gross revenues of less than $40 million in the three previous calendar years.[127] For Block F, an additional classification for ''very small business'' was added and is defined as an entity that, together with their affiliates, has average gross revenues of not more than $15 million for the preceding three calendar years.[128] These regulations defining ''small entity'' in the context of broadband PCS auctions have been approved by the SBA.[129] No small businesses within the SBA-approved definition bid successfully for licenses in Blocks A and B. There were 90 winning bidders that qualified as small entities in the Block C auctions. A total of 93 small and very small business bidders won approximately 40% of the 1,479 licenses for Blocks D, E, and F.[130] Based on this information, we conclude that the number of small broadband PCS licensees will include the 90 winning C Block bidders and the 93 qualifying bidders in the D, E, and F blocks, for a total of 183 small entity PCS providers as defined by the SBA and the Commission's auction rules.

45. Narrowband PCS. The Commission has auctioned nationwide and regional licenses for narrowband PCS. There are 11 nationwide and 30 regional licensees for narrowband PCS. The Commission does not have sufficient information to determine whether any of these licensees are small businesses within the SBA-approved

[116] 13 CFR 121.201, Standard Industrial Classification (SIC) code 4812.

[117] U.S. Bureau of the Census, U.S. Department of Commerce, 1992 Census of Transportation, Communications, and Utilities, UC92-S–1, Subject Series, Establishment and Firm Size, Table 5, Employment Size of Firms; 1992, SIC code 4812 (issued May 1995).

[118] 220 MHz Third Report and Order, 12 FCC Rcd 10943, 11068–70, at paras. 291–295 (1997).

[119] 220 MHz Third Report and Order, 12 FCC Rcd at 11068–69, para. 291.

[120] *See* Letter from A. Alvarez, Administrator, SBA, to D. Phythyon, Chief, Wireless Telecommunications Bureau, FCC (Jan. 6, 1998).

[121] *See generally* Public Notice, ''220 MHz Service Auction Closes,'' Report No. WT 98–36 (Wireless Telecom. Bur. Oct. 23, 1998).

[122] Public Notice, ''FCC Announces It is Prepared to Grant 654 Phase II 220 MHz Licenses After Final Payment is Made,'' Report No. AUC–18–H, DA No. 99–229 (Wireless Telecom. Bur. Jan. 22, 1999).

[123] 13 CFR 121.201, SIC code 4812.

[124] *Telecommunications Industry Revenue,* Figure 2.

[125] 13 CFR 121.201, SIC code 4812.

[126] *Telecommunications Industry Revenue,* Figure 2.

[127] *See Amendment of Parts 20 and 24 of the Commission's Rules—Broadband PCS Competitive Bidding and the Commercial Mobile Radio Service Spectrum Cap, Report and Order,* FCC 96–278, WT Docket No. 96–59, paras. 57–60 (released Jun. 24, 1996), 61 FR 33859 (Jul. 1, 1996); *see also* 47 CFR 24.720(b).

[128] *See Amendment of Parts 20 and 24 of the Commission's Rules—Broadband PCS Competitive Bidding and the Commercial Mobile Radio Service Spectrum Cap, Report and Order,* FCC 96–278, WT Docket No. 96–59, para. 60 (1996), 61 FR 33859 (Jul. 1, 1996).

[129] *See, e.g.,* Implementation of Section 309(j) of the Communications Act—Competitive Bidding, PP Docket No. 93–253, *Fifth Report and Order,* 9 FCC Rcd 5532, 5581–84 (1994).

[130] FCC News, *Broadband PCS, D, E and F Block Auction Closes,* No. 71744 (released Jan. 14, 1997).

definition for radiotelephone companies. At present, there have been no auctions held for the major trading area (MTA) and basic trading area (BTA) narrowband PCS licenses. The Commission anticipates a total of 561 MTA licenses and 2,958 BTA licenses will be awarded by auction. Such auctions have not yet been scheduled, however. Given that nearly all radiotelephone companies have no more than 1,500 employees and that no reliable estimate of the number of prospective MTA and BTA narrowband licensees can be made, we assume, for purposes of this IRFA, that all of the licenses will be awarded to small entities, as that term is defined by the SBA.

46. Rural Radiotelephone Service. The Commission has not adopted a definition of small entity specific to the Rural Radiotelephone Service.[131] A significant subset of the Rural Radiotelephone Service is the Basic Exchange Telephone Radio Systems (BETRS).[132] We will use the SBA's definition applicable to radiotelephone companies, *i.e.*, an entity employing no more than 1,500 persons.[133] There are approximately 1,000 licensees in the Rural Radiotelephone Service, and we estimate that almost all of them qualify as small entities under the SBA's definition.

47. Air-Ground Radiotelephone Service. The Commission has not adopted a definition of small entity specific to the Air-Ground Radiotelephone Service.[134] Accordingly, we will use the SBA's definition applicable to radiotelephone companies, *i.e.*, an entity employing no more than 1,500 persons.[135] There are approximately 100 licensees in the Air-Ground Radiotelephone Service, and we estimate that almost all of them qualify as small under the SBA definition.

48. Specialized Mobile Radio (SMR). The Commission awards bidding credits in auctions for geographic area 800 MHz and 900 MHz SMR licenses to firms that had revenues of no more than $15 million in each of the three previous calendar years.[136] In the context of 900 MHz SMR, this regulation defining ''small entity'' has been approved by the SBA; approval concerning 800 MHz SMR is being sought.

49. The proposed fees in the NPRM apply to SMR providers in the 800 MHz and 900 MHz bands that either hold geographic area licenses or have obtained extended implementation authorizations. We do not know how many firms provide 800 MHz or 900 MHz geographic area SMR service pursuant to extended implementation authorizations, nor how many of these providers have annual revenues of no more than $15 million. One firm has over $15 million in revenues. We assume, for purposes of this IRFA, that all of the remaining existing extended implementation authorizations are held by small entities, as that term is defined by the SBA.

50. For geographic area licenses in the 900 MHz SMR band, there are 60 who qualified as small entities. For the 800 MHz SMR's, 38 are small or very small entities.

51. Private Land Mobile Radio (PLMR). PLMR systems serve an essential role in a range of industrial, business, land transportation, and public safety activities. These radios are used by companies of all sizes operating in all U.S. business categories. The Commission has not developed a definition of small entity specifically applicable to PLMR licensees due to the vast array of PLMR users. For the purpose of determining whether a licensee is a small business as defined by the SBA, each licensee would need to be evaluated within its own business area.

52. The Commission is unable at this time to estimate the number of small businesses which could be impacted by the rules. However, the Commission's 1994 Annual Report on PLMRs[137] indicates that at the end of fiscal year 1994 there were 1,087,267 licensees operating 12,481,989 transmitters in the PLMR bands below 512 MHz. Because any entity engaged in a commercial activity is eligible to hold a PLMR license, the proposed rules in this context could potentially impact every small business in the United States.

53. Amateur Radio Service. We estimate that 6,800 applicants will apply for vanity call signs in FY 1999. All are presumed to be individuals. All other amateur licensees are exempt from payment of regulatory fees.

54. Aviation and Marine Radio Service. Small businesses in the aviation and marine radio services use a marine very high frequency (VHF) radio, any type of emergency position indicating radio beacon (EPIRB) and/or radar, a VHF aircraft radio, and/or any type of emergency locator transmitter (ELT). The Commission has not developed a definition of small entities specifically applicable to these small businesses. Therefore, the applicable definition of small entity is the definition under the SBA rules for radiotelephone communications.[138]

55. Most applicants for recreational licenses are individuals. Approximately 581,000 ship station licensees and 131,000 aircraft station licensees operate domestically and are not subject to the radio carriage requirements of any statute or treaty. Therefore, for purposes of our evaluations and conclusions in this IRFA, we estimate that there may be at least 712,000 potential licensees which are individuals or are small entities, as that term is defined by the SBA. We estimate, however, that only 16,800 will be subject to FY 1999 regulatory fees.

56. Fixed Microwave Services. Microwave services include common carrier,[139] private-operational fixed,[140] and broadcast auxiliary radio services.[141] At present, there are approximately 22,015 common carrier fixed licensees and 61,670 private operational-fixed licensees and broadcast auxiliary radio licensees in the microwave services. The Commission has not yet defined a small business with respect to microwave services. For purposes of this IRFA, we will utilize the SBA's definition applicable to radiotelephone companies—*i.e.*, an entity with no more than 1,500 persons.[142] We estimate, for this purpose, that all of the Fixed Microwave licensees (excluding broadcast auxiliary licensees) would qualify as small entities under the SBA

[131] The service is defined in section 22.99 of the Commission's rules, 47 CFR 22.99.

[132] BETRS is defined in sections 22.757 and 22.759 of the Commission's rules, 47 CFR 22.757 and 22.759.

[133] 13 CFR 121.201, SIC code 4812.

[134] The service is defined in section 22.99 of the Commission's rules, 47 CFR 22.99.

[135] 13 CFR 121.201, SIC code 4812.

[136] 47 CFR 90.814(b)(1).

[137] Federal Communications Commission, *60th Annual Report, Fiscal Year 1994*, at 116.

[138] 13 CFR 121.201, SIC code 4812.

[139] 47 CFR 101 *et seq.* (formerly, part 21 of the Commission's Rules).

[140] Persons eligible under parts 80 and 90 of the Commission's rules can use Private Operational-Fixed Microwave services. *See* 47 CFR parts 80 and 90. Stations in this service are called operational-fixed to distinguish them from common carrier and public fixed stations. Only the licensee may use the operational-fixed station, and only for communications related to the licensee's commercial, industrial, or safety operations.

[141] Auxiliary Microwave Service is governed by part 74 of Title 47 of the Commission's rules. *See* 47 CFR 74 *et seq.* Available to licensees of broadcast stations and to broadcast and cable network entities, broadcast auxiliary microwave stations are used for relaying broadcast television signals from the studio to the transmitter, or between two points such as a main studio and an auxiliary studio. The service also includes mobile TV pickups, which relay signals from a remote location back to the studio.

[142] 13 CFR 121.201, SIC 4812.

definition for radiotelephone companies.

57. Public Safety Radio Services. Public Safety radio services include police, fire, local government, forestry conservation, highway maintenance, and emergency medical services.[143] There are a total of approximately 127,540 licensees within these services. Governmental entities as well as private businesses comprise the licensees for these services. As indicated *supra* in paragraph four of this IRFA, all governmental entities with populations of less than 50,000 fall within the definition of a small entity.[144] All licensees in this category are exempt from the payment of regulatory fees.

58. Personal Radio Services. Personal radio services provide short-range, low power radio for personal communications, radio signalling, and business communications not provided for in other services. The services include the citizen's band (CB) radio service, general mobile radio service (GMRS), radio control radio service, and family radio service (FRS).[145] Inasmuch as the CB, GMRS, and FRS licensees are individuals, no small business definition applies for these services. We are unable at this time to estimate the number of other licensees that would qualify as small under the SBA's definition; however, only GMRS licensees are subject to regulatory fees.

59. Offshore Radiotelephone Service. This service operates on several UHF TV broadcast channels that are not used for TV broadcasting in the coastal area of the states bordering the Gulf of Mexico.[146] At present, there are approximately 55 licensees in this service. We are unable at this time to estimate the number of licensees that would qualify as small under the SBA's definition for radiotelephone communications.

60. Wireless Communications Services. This service can be used for fixed, mobile, radiolocation and digital audio broadcasting satellite uses. The Commission defined ''small business'' for the wireless communications services (WCS) auction as an entity with average gross revenues of $40 million for each of the three preceding years, and a ''very small business'' as an entity with average gross revenues of $15 million for each of the three preceding years. The Commission auctioned geographic area licenses in the WCS service. In the auction, there were seven winning bidders that qualified as very small business entities, and one that qualified as a small business entity. We conclude that the number of geographic area WCS licensees affected includes these eight entities.

IV. Description of Projected Reporting, Recordkeeping and Other Compliance Requirements

61. With certain exceptions, the Commission's Schedule of Regulatory Fees applies to all Commission licensees and regulatees. Most licensees will be required to count the number of licenses or call signs authorized, complete and submit an FCC Form 159 (''FCC Remittance Advice''), and pay a regulatory fee based on the number of licenses or call signs.[147] Interstate telephone service providers must compute their annual regulatory fee based on their adjusted gross interstate revenue using information they already supply to the Commission in compliance with the Telecommunications Relay Service (TRS) Fund, and they must complete and submit the FCC Form 159. Compliance with the fee schedule will require some licensees to tabulate the number of units (*e.g.*, cellular telephones, pagers, cable TV subscribers) they have in service, and complete and submit an FCC Form 159. Licensees ordinarily will keep a list of the number of units they have in service as part of their normal business practices. No additional outside professional skills are required to complete the FCC Form 159, and it can be completed by the employees responsible for an entity's business records.

62. Each licensee must submit the FCC Form 159 to the Commission's lockbox bank after computing the number of units subject to the fee. As an option, licensees are permitted to file electronically or on computer diskette to minimize the burden of submitting multiple copies of the FCC Form 159. This latter, optional procedure may require additional technical skills. Licensees who pay small fees in advance supply fee information as part of their application and do not need to use the FCC Form 159.

63. Licensees and regulatees are advised that failure to submit the required regulatory fee in a timely manner will subject the licensee or regulatee to a late payment fee of 25 percent in addition to the required fee.[148] Until payment is received, no new or pending applications will be processed, and existing authorizations may be subject to rescission.[149] Further, in accordance with the Debt Collection Improvement Act of 1996, federal agencies may bar a person or entity from obtaining a federal loan or loan

[143] With the exception of the special emergency service, these services are governed by Subpart B of part 90 of the Commission's rules, 47 CFR 90.15–90.27. The police service includes 26,608 licensees that serve state, county, and municipal enforcement through telephony (voice), telegraphy (code) and teletype and facsimile (printed material). The fire radio service includes 22,677 licensees comprised of private volunteer or professional fire companies as well as units under governmental control. The local government service that is presently comprised of 40,512 licensees that are state, county, or municipal entities that use the radio for official purposes not covered by other public safety services. There are 7,325 licensees within the forestry service which is comprised of licensees from state departments of conservation and private forest organizations who set up communications networks among fire lookout towers and ground crews. The 9,480 state and local governments are licensed to highway maintenance service provide emergency and routine communications to aid other public safety services to keep main roads safe for vehicular traffic. The 1,460 licensees in the Emergency Medical Radio Service (EMRS) use the 39 channels allocated to this service for emergency medical service communications related to the delivery of emergency medical treatment. 47 CFR 90.15–90.27. The 19,478 licensees in the special emergency service include medical services, rescue organizations, veterinarians, handicapped persons, disaster relief organizations, school buses, beach patrols, establishments in isolated areas, communications standby facilities, and emergency repair of public communications facilities. 47 CFR 90.33–90.55.

[144] 5 U.S.C. 601(5).

[145] Licensees in the Citizens Band (CB) Radio Service, General Mobile Radio Service (GMRS), Radio Control (R/C) Radio Service and Family Radio Service (FRS) are governed by Subpart D, Subpart A, Subpart C, and Subpart B, respectively, of part 95 of the Commission's rules. 47 CFR 95.401–95.428; 95.1–95.181; 95.201–95.225; 47 CFR 95.191–95.194.

[146] This service is governed by subpart I of part 22 of the Commission's rules. *See* 47 CFR 22.1001–22.1037.

[147] The following categories are exempt from the Commission's Schedule of Regulatory Fees: Amateur radio licensees (except applicants for vanity call signs) and operators in other non-licensed services (e.g., Personal Radio, part 15, ship and aircraft). Governments and non-profit (exempt under section 501(c) of the Internal Revenue Code) entities are exempt from payment of regulatory fees and need not submit payment. Non-commercial educational broadcast licensees are exempt from regulatory fees as are licensees of auxiliary broadcast services such as low power auxiliary stations, television auxiliary service stations, remote pickup stations and aural broadcast auxiliary stations where such licenses are used in conjunction with commonly owned non-commercial educational stations. Emergency Alert System licenses for auxiliary service facilities are also exempt as are instructional television fixed service licensees. Regulatory fees are automatically waived for the licensee of any translator station that: (1) is not licensed to, in whole or in part, and does not have common ownership with, the licensee of a commercial broadcast station; (2) does not derive income from advertising; and (3) is dependent on subscriptions or contributions from members of the community served for support. Receive only earth station permittees are exempt from payment of regulatory fees. A regulatee will be relieved of its fee payment requirement if its total fee due, including all categories of fees for which payment is due by the entity, amounts to less than $10.

[148] 47 U.S.C. 1.1164(a).

[149] 47 U.S.C. 1.1164(c).

insurance guarantee if that person or entity fails to pay a delinquent debt owed to any federal agency.[150] Thus, debts owed to the Commission may result in a person or entity being denied a federal loan or loan guarantee pending before another federal agency until such obligations are paid.[151]

64. The Commission's rules currently provide for relief in exceptional circumstances. Persons or entities that believe they have been placed in the wrong regulatory fee category or are experiencing extraordinary and compelling financial hardship, upon a showing that such circumstances override the public interest in reimbursing the Commission for its regulatory costs, may request a waiver, reduction or deferment of payment of the regulatory fee.[152] However, timely submission of the required regulatory fee must accompany requests for waivers or reductions. This will avoid any late payment penalty if the request is denied. The fee will be refunded if the request is granted. In exceptional and compelling instances (where payment of the regulatory fee along with the waiver or reduction request could result in reduction of service to a community or other financial hardship to the licensee), the Commission will accept a petition to defer payment along with a waiver or reduction request.

V. Steps Taken to Minimize Significant Economic Impact on Small Entities, and Significant Alternatives Considered

65. *The Omnibus Consolidated and Emergency Supplemental Appropriations Act for FY 1999*, Public Law 105–277 requires the Commission to revise its Schedule of Regulatory Fees in order to recover the amount of regulatory fees that Congress, pursuant to Section 9(a) of the Communications Act, as amended, has required the Commission to collect for Fiscal Year (FY) 1999.[153] We seek comment on the proposed methodology for implementing these statutory requirements and any other potential impact of these proposals on small entities.

66. With the use of actual cost accounting data for computation of regulatory fees, we found that some fees which were very small in previous years would have increased dramatically. The methodology proposed in this *NPRM* minimizes this impact by limiting the amount of increase and shifting costs to other services which, for the most part, are larger entities.

67. Several categories of licensees and regulatees are exempt from payment of regulatory fees. *See, e.g.*, footnote 108, *supra*, and Attachment H of the *NPRM*, *infra*.

VI. Federal Rules That May Duplicate, Overlap, or Conflict With the Proposed Rules

68. None.

BILLING CODE 6712–01–P

[150] Public Law 104–134, 110 Stat. 1321 (1996).

[151] 31 U.S.C. 7701(c)(2)(B).

Attachment B

SOURCES OF PAYMENT UNIT ESTIMATES FOR FY 1999

In order to calculate individual service fees for FY 1999, we adjusted FY 1998 payment units for each service to more accurately reflect expected FY 1999 payment liabilities. We obtained our updated estimates through a variety of means. For example, we used Commission licensee data bases, actual prior year payment records and industry and trade association projections when available. We tried to obtain verification for these estimates from multiple sources and, in all cases, we compared FY 1999 estimates with actual FY 1998 payment units to ensure that our revised estimates were reasonable. Where it made sense, we adjusted and/or rounded our final estimates to take into consideration the fact that certain variables that impact on the number of payment units cannot yet be estimated exactly. These include an unknown number of waivers and/or exemptions that may occur in FY 1999 and the fact that, in many services, the number of actual licensees or station operators fluctuates from time to time due to economic, technical or other reasons. Therefore, when we note, for example, that our estimated FY 1999 payment units are based on FY 1998 actual payment units, it does not necessarily mean that our FY 1999 projection is exactly the same number as FY 1998. It means that we have either rounded the FY 1999 number or adjusted it slightly to account for these variables.

EE CATEGORY	SOURCES OF PAYMENT UNIT ESTIMATES
Land Mobile (All), Microwave, IVDS[154], Marine (Ship & Coast), Aviation (Aircraft & Ground), GMRS, Amateur Vanity Call Signs, Domestic Public Fixed	Based on Wireless Telecommunications Bureau (WTB) projections of new applications and renewals taking into consideration existing Commission licensee data bases. Aviation (Aircraft) and Marine (Ship) estimates have been adjusted to take into consideration the licensing of portions of these services on a voluntary basis.
CMRS Mobile Services	Based on actual FY 1998 payment units adjusted to take into consideration industry estimates of growth between FY 1998 and FY 1999 and Wireless Telecommunications Bureau projections of new applications and average number of mobile units associated with each application.
CMRS Messaging Services	Based on industry estimates of the number of units in operation.
AM/FM Radio Stations	Based on actual FY 1998 payment units.
UHF/VHF Television Stations	Based on actual FY 1998 payment units.
AM/FM/TV Construction Permits	Based on actual FY 1998 payment units.
LPTV, Translators and Boosters	Based on actual FY 1998 payment units.
Auxiliaries	Based on actual FY 1998 payment units.
MDS/MMDS	Based on actual FY 1998 payment units.
Cable Antenna Relay Service (CARS)	Based on actual FY 1998 payment units.
Cable Television System Subscribers	Based on Cable Services Bureau and industry estimates of subscribership.
Interstate Telephone Service Providers	Based on actual FY 1998 interstate revenues associated with contributions to the Telecommunications Relay System (TRS) Fund, adjusted to take into consideration FY 1999 revenue growth in this industry as estimated by the Common Carrier Bureau.
Earth Stations	Based on actual FY 1998 payment units.
Space Stations (GSOs & NGSOs)	Based on International Bureau licensee data bases.
International Bearer Circuits	Based on International Bureau estimate.
International HF Broadcast Stations, International Public Fixed Radio Service	Based on actual FY 1998 payment units.

[154] The Wireless Telecommunications Bureau's staff advises that they do not anticipate receiving any applications for IVDS in FY 1999. Therefore, since there is no volume, there will be no regulatory fee in the IVDS category for FY 1999.

Attachment C

CALCULATION OF REVENUE REQUIREMENTS AND PRO-RATA FEES

Fee Category	FY 1999 Payment Units	(times) FY 1998 Fee	(times) Payment Years	(equals) Computed FY 1999 Revenue Requirement	Pro-Rated Revenue Requirement**	Rounded New FY 1999 Regulatory Fee	Expected FY 1999 Revenue
LM (220 MHz, >470 MHZ-Base, SMRS)	5,800	12	5	348,000	380,800	13	377,000
Private Microwave	5,375	12	10	645,000	705,793	13	698,750
Domestic Public Fixed/Comc'l Microwave	1,000	10	10	120,000	131,310	13	130,000
IVDS	0	0	5	0	0	0	0
Marine (Ship)	16,800	6	10	1,008,000	1,103,006	7	1,176,000
GMRS/Other LM	68,700	6	5	2,061,000	2,255,254	7	2,404,500
Aviation (Aircraft)	4,800	6	10	288,000	315,145	7	336,000
Marine (Coast)	1,400	6	5	42,000	45,959	7	49,000
Aviation (Ground)	1,600	6	5	48,000	52,524	7	56,000
Amateur Vanity Call Signs	6,800	6	10	88,400	96,732	1.42	96,732
AM/FM Radio	8,905	1,370	1	12,195,735	13,345,211	1,500	13,381,900
AM Construction Permits	75	235	1	17,625	19,286	255	19,125
FM Construction Permits	300	1,150	1	345,000	377,517	1,250	375,000
Satellite TV	109	1,175	1	128,075	140,146	1,275	138,975
Satellite TV Construction Permit	6	420	1	2,520	2,758	460	2,760
VHF Markets 1-10	42	37,575	1	1,578,150	1,726,894	41,125	1,727,250
VHF Markets 11-25	60	31,275	1	1,876,500	2,053,364	34,225	2,053,500
VHF Markets 26-50	70	21,400	1	1,498,000	1,639,190	23,425	1,639,750
VHF Markets 51-100	119	11,975	1	1,425,025	1,559,337	13,100	1,558,900
VHF Remaining Markets	205	3,100	1	635,500	695,397	3,400	697,000
VHF Construction Permits	15	2,525	1	37,875	41,445	2,775	41,625
UHF Markets 1-10	68	14,175	1	963,900	1,054,750	15,500	1,054,000
UHF Markets 11-25	67	10,725	1	718,575	786,302	11,725	785,575
UHF Markets 26-50	100	6,650	1	665,000	727,678	7,275	727,500
UHF Markets 51-100	150	3,975	1	596,250	652,448	4,350	652,500
UHF Remaining Markets	180	1,075	1	193,500	211,738	1,175	211,500
UHF Construction Permits	60	2,650	1	159,000	173,986	2,900	174,000
Auxiliaries	22,000	11	1	242,000	264,809	12	264,000
International HF Broadcast	5	475	1	2,375	2,599	520	2,600
LPTV/Translators/Boosters	2,020	265	1	535,300	585,753	290	585,800
CARS	1,687	50	1	84,350	92,300	55	92,785
Cable Systems	64,000,000	0.44	1	28,160,000	30,814,144	0.48	30,814,144
Interstate Telephone Service Providers	67,732,300,000	0.0011	1	74,505,530	81,527,847	0.0012	81,527,847
CMRS Mobile Srvcs. (Cell./Publ./Mobile)	55,540,000	0.29	1	15,950,600	17,453,324	0.32	17,453,324
CMRS Messaging Services	34,500,000	0.04	1	1,380,000	1,510,068	0.04	1,510,068
MDS/MMDS	1,650	260	1	429,000	469,434	285	470,250
International Circuits	465,000	6	1	2,790,000	3,052,964	7	3,255,000
International Public Fixed	3	375	1	1,125	1,231	410	1,230
Earth Stations	3,100	165	1	511,500	559,710	180	558,000
Space Stations (Geostationary)	42.5	119,000	1	5,057,500	5,534,181	130,225	5,534,563
Space Stations (Non-geostationary)	2	164,800	1	329,600	360,666	180,325	360,650
****** Total Estimated Revenue Collected				157,662,910	172,523,000		172,995,103
****** Total Revenue Requirement				172,523,000	172,523,000		172,523,000
Difference				(14,860,090)	0		472,103

1.094252288 factor applied

Attachment D

FY 1999 SCHEDULE OF REGULATORY FEES

(PROPOSED)

Fee Category	Annual Regulatory Fee (U.S. $'s)
PMRS (per license) (Formerly Land Mobile - Exclusive Use at 220-222 MHz, above 470 MHz, Base Station and SMRS) (47 CFR part 90)	13
Microwave (per license) (47 CFR part 101)	13
Interactive Video Data Service (per license) (47 CFR part 95)	No Fee
Marine (Ship) (per station) (47 CFR part 80)	7
Marine (Coast) (per license) (47 CFR part 80)	7
General Mobile Radio Service (per license) (47 CFR part 95)	7
Land Mobile (per license) (all stations not covered by PMRS and CMRS)	7
Aviation (Aircraft) (per station) (47 CFR part 87)	7
Aviation (Ground) (per license) (47 CFR part 87)	7
Amateur Vanity Call Signs (per call sign) (47 CFR part 97)	1.42
CMRS Mobile Services (per unit) (47 CFR parts 20, 22, 24, 80 and 90)	.32
CMRS Messaging Services (per unit) (47 CFR parts 20, 22 and 90)	.04
Multipoint Distribution Services (per call sign) (47 CFR part 21)	285
AM Radio Construction Permits	255
FM Radio Construction Permits	1,250
TV (47 CFR part 73) VHF Commercial	
Markets 1-10	41,125
Markets 11-25	34,225
Markets 26-50	23,425
Markets 51-100	13,100
Remaining Markets	3,400
Construction Permits	2,775
TV (47 CFR part 73) UHF Commercial	
Markets 1-10	15,500
Markets 11-25	11,725
Markets 26-50	7,275

Fee Category	Annual Regulatory Fee (U.S. $'s)
Markets 51-100	4,350
Remaining Markets	1,175
Construction Permits	2,900
Satellite Television Stations (All Markets)	1,275
Construction Permits - Satellite Television Stations	460
Low Power TV, TV/FM Translators & Boosters (47 CFR part 74)	290
Broadcast Auxiliary (47 CFR part 74)	12
Cable Antenna Relay Service (47 CFR part 78)	55
Cable Television Systems (per subscriber) (47 CFR part 76)	.48
Interstate Telephone Service Providers (per revenue dollar)	.0012
Earth Stations (47 CFR part 25)	180
Space Stations (per operational station in geostationary orbit) (47 CFR part 25) also includes Direct Broadcast Satellite Service (per operational station) (47 CFR part 100)	130,225
Space Stations (per operational system in non-geostationary orbit) (47 CFR part 25)	180,325
International Bearer Circuits (per active 64KB circuit)	7
International Public Fixed (per call sign) (47 CFR part 23)	410
International (HF) Broadcast (47 CFR part 73)	520

RADIO STATION REGULATORY FEES						
Population Served	AM Class A	AM Class B	AM Class C	AM Class D	FM Classes A, B1 & C3	FM Classes B, C, C1 & C2
<=20,000	430	325	225	275	325	430
20,001 - 50,000	825	650	325	450	650	825
50.001 - 125,000	1,350	875	450	675	875	1,350
125,001 - 400,000	2,000	1,400	675	825	1,400	2,000
400,001 - 1,000,000	2,750	2,250	1,250	1,500	2,250	2,750
>1,000,000	4,400	3,600	1,750	2,250	3,600	4,400

Attachment E

COMPARISON BETWEEN FY 1998 & FY 1999 PROPOSED REGULATORY FEES

Fee Category	Annual Regulatory Fee FY 1998	NPRM Proposed Fee FY 1999	Annual Regulatory Fee FY 1999
PMRS (per license) (Formerly Land Mobile-Exclusive Use at 220-222 Mhz, above 470 Mhz, Base Station and SMRS) (47 CFR part 90)	12	13	
Microwave (per license) (47 CFR part 101)	12	13	
Interactive Video Data Service (per license) (47 CFR part 95)	No Fee	No Fee	
Marine (Ship) (per station) (47 CFR part 80)	6	7	
Marine (Coast) (per license) (47 CFR part 80)	6	7	
General Mobile Radio Service (per license) (47 CFR part 95)	6	7	
Land Mobile (per license) (all stations not covered by PMRS and CMRS)	6	7	
Aviation (Aircraft) (per station) (47 CFR part 87)	6	7	
Aviation (Ground) (per license) (47 CFR part 87)	6	7	
Amateur Vanity Call Signs (per call sign) (47 CFR part 97)	1.30	1.42	
CMRS Mobile Services (per unit) (47 CFR parts 20, 22, 24, 80 and 90)	.29	.32	
CMRS Messaging Services [formerly One Way Paging] (per unit) (47 CFR parts 20, 22, and 90)	.04	.04	
Multipoint Distribution Services (per call sign) (47 CFR part 21)	260	285	
AM Construction Permits	235	255	
FM Construction Permits	1,150	1,250	
TV (47 CFR part 73) VHF Commercial			
Markets 1-10	37,575	41,125	
Markets 11-25	31,275	34,225	
Markets 26-50	21,400	23,425	
Markets 51-100	11,975	13,100	
Remaining Markets	3,100	3,400	
Construction Permits	2,525	2,775	
TV (47 CFR part 73) UHF Commercial			
Markets 1-10	14,175	15,500	
Markets 11-25	10,725	11,725	

Fee Category	Annual Regulatory Fee FY 1998	NPRM Proposed Fee FY 1999	Annual Regulatory Fee FY 1999
Markets 26-50	6,650	7,275	
Markets 51-100	3,975	4,350	
Remaining Markets	1,075	1,175	
Construction Permits	2,650	2,900	
Satellite Television Stations (All Markets)	1,175	1,275	
Construction Permits - Satellite Television Stations	420	460	
Low Power TV, TV/FM Translators & Boosters (47 CFR part 74)	265	290	
Broadcast Auxiliary (47 CFR part 74)	11	12	
Cable Antenna Relay Service (47 CFR part 78)	50	55	
Earth Stations (47 CFR part 25)	165	180	
Cable Television Systems (per subscriber) (47 CFR part 76)	.44	.48	
Interstate Telephone Service Providers (per revenue dollar)	.0011	.0012	
Space Stations (per operational station in geostationary orbit) (47 CFR part 25) also includes Direct Broadcast Satellite Service (per operational station) (47 CFR part 100)	119,000	130,225	
Space Stations (per operational system in non-geostationary orbit) (47 CFR part 25)	164,800	180,325	
International Bearer Circuits (per active 64KB circuit)	6	7	
International Public Fixed (per call sign) (47 CFR part 23)	375	410	
International (HF) Broadcast (47 CFR part 73)	475	520	

FY 1998 RADIO STATION REGULATORY FEES						
Population Served	AM Class A	AM Class B	AM Class C	AM Class D	FM Classes A, B1 & C3	FM Classes B, C, C1 & C2
<=20,000	400	300	200	250	300	400
20,001 - 50,000	750	600	300	400	600	750
50.001 - 125,000	1,250	800	400	600	800	1,250
125,001 - 400,000	1,750	1,250	600	750	1,250	1,750
400,001 - 1,000,000	2,500	2,000	1,000	1,250	2,000	2,500
>1,000,000	4,000	3,250	1,500	2,000	3,250	4,000

FY 1999 RADIO STATION REGULATORY FEES						
Population Served	AM Class A	AM Class B	AM Class C	AM Class D	FM Classes A, B1 & C3	FM Classes B, C, C1 & C2
<=20,000	430	325	225	275	325	430
20,001 - 50,000	825	650	325	450	650	825
50.001 - 125,000	1,350	875	450	675	875	1,350
125,001 - 400,000	2,000	1,400	675	825	1,400	2,000
400,001 - 1,000,000	2,750	2,250	1,250	1,500	2,250	2,750
>1,000,000	4,400	3,600	1,750	2,200	3,600	4,400

BILLING CODE 6712–01–C

Attachment F—Detailed Guidance on Who Must Pay Regulatory Fees

1. The guidelines below provide an explanation of regulatory fee categories established by the Schedule of Regulatory Fees in section 9 (g) of the Communications Act,[155] as modified in the instant *NPRM*. Where regulatory fee categories need interpretation or clarification, we have relied on the legislative history of section 9, our own experience in establishing and regulating the Schedule of Regulatory Fees for Fiscal Years (FY) 1994, 1995, 1996, 1997, and 1998 and the services subject to the fee schedule. The categories and amounts set out in the schedule have been modified to reflect changes in the number of payment units, additions and changes in the services subject to the fee requirement and the benefits derived from the Commission's regulatory activities, and to simplify the structure of the schedule. The schedule may be similarly modified or adjusted in future years to reflect changes in the Commission's budget and in the services regulated by the Commission.[156]

2. *Exemptions.* Governments and nonprofit entities are exempt from paying regulatory fees and should not submit payment. A nonprofit entity may be asked to submit a current IRS Determination Letter documenting that it is exempt from taxes under section 501 of the Internal Revenue Code or the certification of a governmental authority attesting to its nonprofit status. The governmental exemption applies even where the government-owned or community-owned facility is in competition with a commercial operation. Other specific exemptions are discussed below in the descriptions of other particular service categories.

1. Private Wireless Radio Services

3. Two levels of statutory fees were established for the Private Wireless Radio Services—exclusive use services and shared use services. Thus, licensees who generally receive a higher quality communication channel due to exclusive or lightly shared frequency assignments will pay a higher fee than those who share marginal quality assignments. This dichotomy is consistent with the directive of section 9, that the regulatory fees reflect the benefits provided to the licensees.[157] In addition, because of the generally small amount of the fees assessed against Private Wireless Radio Service licensees, applicants for new licenses and reinstatements and for renewal of existing licenses are required to pay a regulatory fee covering the entire license term, with only a percentage of all licensees paying a regulatory fee in any one year. Applications for modification or assignment of existing authorizations do not require the payment of regulatory fees. The expiration date of those authorizations will reflect only the unexpired term of the underlying license rather than a new license term.

a. Exclusive Use Services

4. *Private Mobile Radio Services (PMRS):* Regulatees in this category include those authorized under part 90 of the Commission's rules to provide limited access Wireless Radio service that allows high quality voice or digital communications between vehicles or to fixed stations to further the business activities of the licensee. These services, using the 220–222 MHz band and frequencies at 470 MHz and above, may be offered on a private carrier basis in the Specialized Mobile Radio Services (SMRS).[158] For FY 1999, PMRS licensees will pay a $13 annual regulatory fee per license, payable for an entire five or ten year license term at the time of application for a new, renewal, or reinstatement license.[159] The total regulatory fee due is either $65 for a license with a five year term or $130 for a license with a 10 year term.

5. *Microwave Services:* These services include private and commercial microwave systems and private and commercial carrier systems authorized under part 101 of the Commission's rules to provide telecommunications services between fixed points on a high quality channel of communications. Microwave systems are often used to relay data and to control railroad, pipeline, and utility equipment. Commercial systems typically are used for video or data transmission or distribution. For FY 1999, Microwave licensees will pay a $13 annual regulatory fee per license, payable for an entire ten year license term at the time of application for a new, renewal, or reinstatement license. The total regulatory fee due is $130 for the ten year license term.

6. *Interactive Video Data Service (IVDS):* The IVDS is a two-way, point-to-multi-point radio service allocated high quality channels of communications and authorized under part 95 of the Commission's rules. The IVDS provides information, products, and services, and also the capability to obtain responses from subscribers in a specific service area. The IVDS is offered on a private carrier basis. The Commission does not anticipate receiving any applications in the IVDS during FY 1999. Therefore, for FY 1999, there is no regulatory fee for IVDS licensees.

b. Shared Use Services

7. *Marine (Ship) Service:* This service is a shipboard radio service authorized under part 80 of the Commission's rules to provide telecommunications between watercraft or between watercraft and shore-based stations. Radio installations are required by domestic and international law for large passenger or cargo vessels. Radio equipment may be voluntarily installed on smaller vessels, such as recreational boats. The Telecommunications Act of 1996 gave the Commission the authority to license certain ship stations by rule rather than by individual license. The Commission exercises that authority. Thus, private boat operators sailing entirely within domestic U.S. waters and who are not otherwise required by treaty or agreement to carry a radio, are no longer required to hold a marine license, and they will not be required to pay a regulatory fee. For FY 1999, parties required to be licensed and those choosing to be licensed for Marine (Ship) Stations will pay a $7 annual regulatory fee per station, payable for an entire ten-year license term at the time of application for a new, renewal, or reinstatement license. The total regulatory fee due is $70 for the ten year license term.

8. *Marine (Coast) Service:* This service includes land-based stations in the maritime services, authorized under part 80 of the Commission's rules, to provide communications services to ships and other watercraft in coastal and inland waterways. For FY 1999, licensees of Marine (Coast) Stations will pay a $7 annual regulatory fee per call sign, payable for the entire five year license term at the time of application for a new, renewal, or reinstatement license. The total regulatory fee due is $35 per call sign for the five-year license term.

9. *Private Land Mobile (Other) Services:* These services include Land Mobile Radio Services operating under parts 90 and 95 of the Commission's

[155] 47 U.S.C. 159(g)

[156] 47 U.S.C. 159(b)(2), (3).

[157] 47 U.S.C. 159(b)(1)(A).

[158] This category only applies to licensees of shared-use private 220–222 MHz and 470 MHz and above in the Specialized Mobile Radio (SMR) service who have elected not to change to the Commercial Mobile Radio Service (CMRS). Those who have elected to change to the CMRS are referred to paragraph 14 of this Attachment.

[159] Although this fee category includes licenses with ten-year terms, the estimated volume of ten-year license applications in FY 1999 is less than one-tenth of one percent and, therefore, is statistically insignificant.

rules. Services in this category provide one- or two-way communications between vehicles, persons or fixed stations on a shared basis and include radiolocation services, industrial radio services, and land transportation radio services. For FY 1999, licensees of services in this category will pay a $7 annual regulatory fee per call sign, payable for an entire five-year license term at the time of application for a new, renewal, or reinstatement license. The total regulatory fee due is $35 for the five-year license term.

10. *Aviation (Aircraft) Service:* These services include stations authorized to provide communications between aircraft and between aircraft and ground stations and include frequencies used to communicate with air traffic control facilities pursuant to part 87 of the Commission's rules. The Telecommunications Act of 1996 gave the Commission the authority to license certain aircraft radio stations by rule rather than by individual license. The commission exercises that authority. Thus, private aircraft operators flying entirely within domestic U.S. airspace and who are not otherwise required by treaty or agreement to carry a radio are no longer required to hold an aircraft license, and they will not be required to pay a regulatory fee. For FY 1999, parties required to be licensed and those choosing to be licensed for Aviation (Aircraft) Stations will pay a $7 annual regulatory fee per station, payable for the entire ten-year license term at the time of application for a new, renewal, or reinstatement license. The total regulatory fee due is $70 per station for the ten-year license term.

11. *Aviation (Ground) Service:* This service includes stations authorized to provide ground-based communications to aircraft for weather or landing information, or for logistical support pursuant to part 87 of the Commission's rules. Certain ground-based stations which only serve itinerant traffic, i.e., possess no actual units on which to assess a fee, are exempt from payment of regulatory fees. For FY 1999, licensees of Aviation (Ground) Stations will pay a $7 annual regulatory fee per license, payable for the entire five-year license term at the time of application for a new, renewal, or reinstatement license. The total regulatory fee is $35 per call sign for the five-year license term.

12. *General Mobile Radio Service (GMRS):* These services include Land Mobile Radio licensees providing personal and limited business communications between vehicles or to fixed stations for short-range, two-way communications pursuant to part 95 of the Commission's rules. For FY 1999, GMRS licensees will pay a $7 annual regulatory fee per license, payable for an entire five-year license term at the time of application for a new, renewal or reinstatement license. The total regulatory fee due is $35 per license for the five-year license term.

c. Amateur Radio Vanity Call Signs

13. *Amateur Vanity Call Signs:* This category covers voluntary requests for specific call signs in the Amateur Radio Service authorized under part 97 of the Commission's rules. Applicants for Amateur Vanity Call-Signs will continue to pay a $1.30 annual regulatory fee per call sign, as prescribed in the FY 1998 fee schedule, payable for an entire ten-year license term at the time of application for a vanity call sign until the FY 1999 fee schedule becomes effective. The total regulatory fee due would be $13 per license for the ten-year license term.[160] For FY 1999, Amateur Vanity Call Sign applicants will pay a $1.42 annual regulatory fee per call sign, payable for an entire ten-year term at the time of application for a new, renewal or reinstatement license. The total regulatory fee due is $14.20 per call sign for the ten-year license term. We propose that there will be no refunds to applicants who submit applications before implementation of the FY 1999 fee.

d. Commercial Wireless Radio Services

14. *Commercial Mobile Radio Services (CMRS) Mobile Services:* The Commercial Mobile Radio Service (CMRS) is an ''umbrella'' descriptive term attributed to various existing broadband services authorized to provide interconnected mobile radio services for profit to the public, or to such classes of eligible users as to be effectively available to a substantial portion of the public. CMRS Mobile Services include certain licensees which formerly were licensed as part of the Private Radio Services (*e.g.*, Specialized Mobile Radio Services) and others formerly licensed as part of the Common Carrier Radio Services (*e.g.*, Public Mobile Services and Cellular Radio Service). While specific rules pertaining to each covered service remain in separate parts 22, 24, 27, 80 and 90, general rules for CMRS are contained in part 20. CMRS Mobile Services will include: Specialized Mobile Radio Services (part 90);[161] Broadband Personal Communications Services (part 24), Public Coast Stations (part 80); Public Mobile Radio (Cellular, 800 MHz Air-Ground Radiotelephone, and Offshore Radio Services) (part 22); and Wireless Communications Service (part 27). Each licensee in this group will pay an annual regulatory fee for each mobile or cellular unit (mobile or telephone number), assigned to its customers, including resellers of its services. For FY 1999, the regulatory fee is $.32 per unit.

15. *Commercial Mobile Radio Services (CMRS) Messaging Services:* The Commercial Mobile Radio Service (CMRS) is an ''umbrella'' descriptive term attributed to various existing narrowband services authorized to provide interconnected mobile radio services for profit to the public, or to such classes of eligible users as to be effectively available to a substantial portion of the public. CMRS Messaging Services include certain licensees which formerly were licensed as part of the Private Radio Services (*e.g.*, Private Paging and Radiotelephone Service), licensees formerly licensed as part of the Common Carrier Radio Services (*e.g.*, Public Mobile One-Way Paging), licensees of Narrowband Personal Communications Service (PCS) (*e.g.*, one-way and two-way paging), and 220–222 MHz Band and Interconnected Business Radio Service. While specific rules pertaining to each covered service remain in separate parts 22, 24 and 90, general rules for CMRS are contained in part 20. Each licensee in the CMRS Messaging Services will pay an annual regulatory fee for each unit (pager, telephone number, or mobile) assigned to its customers, including resellers of its services. For FY 1999, the regulatory fee is $.04 per unit.

16. Finally, we are reiterating our definition of CMRS payment units to make it clear that fees are assessable on each PCS or cellular telephone and each one-way or two-way pager capable of receiving or transmitting information, whether or not the unit is ''active'' on the ''as-of'' date for payment of these fees. The unit becomes ''feeable'' if the end user or assignee of the unit has possession of the unit and the unit is capable of transmitting or receiving voice or non-voice messages or data and the unit is either owned and operated by the licensee of the CMRS system or a

[160] Section 9(h) exempts ''amateur radio operator licenses under part 97 of the Commission's rules (47 CFR part 97)'' from the requirement. However, section 9(g)'s fee schedule explicitly includes ''Amateur vanity call signs'' as a category subject to the payment of a regulatory fee.

[161] This category does not include licensees of private shared-use 220 MHz and 470 MHz and above in the Specialized Mobile Radio (SMR) service who have elected to remain non-commercial. Those who have elected not to change to the Commercial Mobile Radio Service (CMRS) are referred to paragraph 4 of this Attachment.

reseller, or the end user of a unit has a contractual agreement for the provision of a CMRS service from a licensee of a CMRS system or a reseller of a CMRS service. The responsible payer of the regulatory fee is the CMRS licensee. For example, John Doe purchases a pager and contractually obtains paging services from Paging Licensee X. Paging Licensee X is responsible for paying the applicable regulatory fee for this unit. Likewise, Cellular Licensee Y donates cellular phones to a high school and the high school either pays for or obtains free cellular service from Cellular Licensee Y. In this situation, Cellular Licensee Y is responsible for paying the applicable regulatory fees for these units.

2. Mass Media Services

17. The regulatory fees for the Mass Media fee category apply to broadcast licensees and permittees. Noncommercial Educational Broadcasters are exempt from regulatory fees.

a. Commercial Radio

18. These categories include licensed Commercial AM (Classes A, B, C, and D) and FM (Classes A, B, B1, C, C1, C2, and C3) Radio Stations operating under part 73 of the Commission's rules.[162] We have combined class of station and city grade contour population data to formulate a schedule of radio fees which differentiate between stations based on class of station and population served. In general, higher class stations and stations in metropolitan areas will pay higher fees than lower class stations and stations located in rural areas. The specific fee that a station must pay is determined by where it ranks after weighting its fee requirement (determined by class of station) with its population. The regulatory fee classifications for Radio Stations for FY 1999 are as follows:

FY 1999 RADIO STATION REGULATORY FEES

Population served	AM Class A	AM Class B	AM Class C	AM Class D	FM Classes A, B1 & C3	FM Classes B, C, C1 & C2
<20,000	430	325	225	275	325	430
20,001–50,000	825	650	325	450	650	825
50,001–125,000	1,350	875	450	675	875	1,350
125,001–400,000	2,000	1,400	675	825	1,400	2,000
400,001–1,000,000	2,750	2,250	1,250	1,500	2,250	2,750
>1,000,000	4,400	3,600	1,750	2,250	3,600	4,400

19. Licensees may determine the appropriate fee payment by referring to a list which will be provided as an attachment to the final *Report and Order* in this proceeding. This same information will be available on the FCC's internet world wide web site (http://www.fcc.gov) by calling the FCC's National Call Center (1–888–225–5322), and may be included in the Public Notices mailed to each licensee for which we have a current address on file (Note: Non-receipt of a Public Notice does not relieve a licensee of its obligation to submit its regulatory fee payment).

b. Construction Permits—Commercial AM Radio

20. This category includes holders of permits to construct new Commercial AM Stations. For FY 1999, permittees will pay a fee of $255 for each permit held. Upon issuance of an operating license, this fee would no longer be applicable and licensees would be required to pay the applicable fee for the designated group within which the station appears.

c. Construction Permits—Commercial FM Radio

21. This category includes holders of permits to construct new Commercial FM Stations. For FY 1999, permittees will pay a fee of $1,250 for each permit held. Upon issuance of an operating license, this fee would no longer be applicable. Instead, licensees would pay a regulatory fee based upon the designated group within which the station appears.

d. Commercial Television Stations

22. This category includes licensed Commercial VHF and UHF Television Stations covered under part 73 of the Commission's rules, except commonly owned Television Satellite Stations, addressed separately below. Markets are Nielsen Designated Market Areas (DMA) as listed in the *Television & Cable Factbook*, Stations Volume No. 67, 1999 Edition, Warren Publishing, Inc. The fees for each category of station are as follows:

VHF Markets 1–10—$41,125
VHF Markets 11–25—$34,225
VHF Markets 26–50—$23,425
VHF Markets 51–100—$13,100
VHF Remaining Markets—$3,400
UHF Markets 1–10—$15,500
UHF Markets 11–25—$11,725
UHF Markets 26–50—$7,275
UHF Markets 51–100—$4,350
UHF Remaining Markets—$1,175

e. Commercial Television Satellite Stations

23. Commonly owned Television Satellite Stations in any market (authorized pursuant to Note 5 of § 73.3555 of the Commission's rules) that retransmit programming of the primary station are assessed a fee of $1,275 annually. Those stations designated as Television Satellite Stations in the 1999 Edition of the *Television and Cable Factbook* are subject to the fee applicable to Television Satellite Stations. All other television licensees are subject to the regulatory fee payment required for their class of station and market.

f. Construction Permits—Commercial VHF Television Stations

24. This category includes holders of permits to construct new Commercial VHF Television Stations. For FY 1999, VHF permittees will pay an annual regulatory fee of $2,775. Upon issuance of an operating license, this fee would no longer be applicable. Instead, licensees would pay a fee based upon the designated market of the station.

g. Construction Permits—Commercial UHF Television Stations

25. This category includes holders of permits to construct new UHF Television Stations. For FY 1999, UHF Television permittees will pay an annual regulatory fee of $2,900. Upon issuance of an operating license, this fee would no longer be applicable. Instead,

[162] The Commission acknowledges that certain stations operating in Puerto Rico and Guam have been assigned a higher level station class than would be expected if the station were located on the mainland. Although this results in a higher regulatory fee, we believe that the increased interference protection associated with the higher station class is necessary and justifies the fee.

licensees would pay a fee based upon the designated market of the station.

h. Construction Permits—Satellite Television Stations

26. The fee for UHF and VHF Television Satellite Station construction permits for FY 1999 is $460. An individual regulatory fee payment is to be made for each Television Satellite Station construction permit held.

i. Low Power Television, FM Translator and Booster Stations, TV Translator and Booster Stations

27. This category includes Low Power UHF/VHF Television stations operating under part 74 of the Commission's rules with a transmitter power output limited to 1 kW for a UHF facility and, generally, 0.01 kW for a VHF facility. Low Power Television (LPTV) stations may retransmit the programs and signals of a TV Broadcast Station, originate programming, and/or operate as a subscription service. This category also includes translators and boosters operating under part 74 which rebroadcast the signals of full service stations on a frequency different from the parent station (translators) or on the same frequency (boosters). The stations in this category are secondary to full service stations in terms of frequency priority. We have also received requests for waivers of the regulatory fees from operators of community based Translators. These Translators are generally not affiliated with commercial broadcasters, are nonprofit, nonprofitable, or only marginally profitable, serve small rural communities, and are supported financially by the residents of the communities served. We are aware of the difficulties these Translators have in paying even minimal regulatory fees, and we have addressed those concerns in the ruling on reconsideration of the FY 1994 *Report and Order*. Community based Translators are exempt from regulatory fees. For FY 1999, licensees in low power television, FM translator and booster, and TV translator and booster category will pay a regulatory fee of $290 for each license held.

j. Broadcast Auxiliary Stations

28. This category includes licensees of remote pickup stations (either base or mobile) and associated accessory equipment authorized pursuant to a single license, Aural Broadcast Auxiliary Stations (Studio Transmitter Link and Inter-City Relay) and Television Broadcast Auxiliary Stations (TV Pickup, TV Studio Transmitter Link, TV Relay) authorized under part 74 of the Commission's Rules. Auxiliary Stations are generally associated with a particular television or radio broadcast station or cable television system. This category does not include translators and boosters (see paragraph 26 *infra*). For FY 1999, licensees of Commercial Auxiliary Stations will pay a $12 annual regulatory fee on a per call sign basis.

k. Multipoint Distribution Service

29. This category includes Multipoint Distribution Service (MDS), Local Multipoint Distribution (LMDS), and Multichannel Multipoint Distribution Service (MMDS), authorized under part 21 of the Commission's Rules to use microwave frequencies for video and data distribution within the United States. For FY 1999, MDS, LMDS, and MMDS stations will pay an annual regulatory fee of $285 per call sign.

3. Cable Services

a. Cable Television Systems

30. This category includes operators of Cable Television Systems, providing or distributing programming or other services to subscribers under part 76 of the Commission's Rules. For FY 1999, Cable Systems will pay a regulatory fee of $.48 per subscriber.[163] Payments for Cable Systems are to be made on a per subscriber basis as of December 31, 1998. Cable Systems should determine their subscriber numbers by calculating the number of single family dwellings, the number of individual households in multiple dwelling units, *e.g.*, apartments, condominiums, mobile home parks, etc., paying at the basic subscriber rate, the number of bulk rate customers and the number of courtesy or fee customers. In order to determine the number of bulk rate subscribers, a system should divide its bulk rate charge by the annual subscription rate for individual households. See FY 1994 *Report and Order*, 59 FR 30984 (January 16, 1994).

b. Cable Antenna Relay Service

31. This category includes Cable Antenna Relay Service (CARS) stations used to transmit television and related audio signals, signals of AM and FM Broadcast Stations, and cablecasting from the point of reception to a terminal point from where the signals are distributed to the public by a Cable Television System. For FY 1999, licensees will pay an annual regulatory fee of $55 per CARS license.

[163] Cable systems are to pay their regulatory fees on a per subscriber basis rather than per 1,000 subscribers as set forth in the statutory fee schedule. See FY 1994 *Report and Order* at paragraph 100.

4. Common Carrier Services

a. Commercial Microwave (Domestic Public Fixed Radio Service)

32. This category includes licensees in the Point-to-Point Microwave Radio Service, Local Television Transmission Radio Service, and Digital Electronic Message Service, authorized under part 101 of the Commission's rules to use microwave frequencies for video and data distribution within the United States. These services are now included in the Microwave category (see paragraph 5 *infra*).

b. Interstate Telephone Service Providers

33. This category includes Inter-Exchange Carriers (IXCs), Local Exchange Carriers (LECs), Competitive Access Providers (CAPs), domestic and international carriers that provide operator services, Wide Area Telephone Service (WATS), 800, 900, telex, telegraph, video, other switched, interstate access, special access, and alternative access services either by using their own facilities or by reselling facilities and services of other carriers or telephone carrier holding companies, and companies other than traditional local telephone companies that provide interstate access services to long distance carriers and other customers. This category also includes pre-paid calling card providers. These common carriers, including resellers, must submit fee payments based upon their proportionate share of gross interstate revenues using the methodology that we have adopted for calculating contributions to the TRS fund.[164] In order to avoid imposing any double payment burden on resellers, we will permit carriers to subtract from their gross interstate revenues, as reported to NECA in connection with their TRS contribution, any payments made to underlying common carriers for telecommunications facilities and services, including payments for interstate access service, that are sold in the form of interstate service. For this purpose, resold telecommunications facilities and services are only intended to include payments that correspond to revenues that will be included by another carrier reporting interstate revenue. For FY 1999, carriers must multiply their adjusted gross revenue figure (gross revenue reduced by the total amount of their payments to underlying common carriers for telecommunications facilities or services) by the factor 0.0012 to

[164] *See Telecommunications Relay Services*, 8 FCC Rcd 5300 (1993), 58 FR 39671 (Jul. 26, 1993).

determine the appropriate fee for this category of service. Regulatees may want to use the following worksheet to determine their fee payment:

	Total	Interstate
(1) Revenue reported in TRS Fund worksheets		
(2) Less: Access charges paid		
(3) Less: Other telecommunications facilities and services taken for resale		
(4) Adjusted revenues (1)minus(2)minus(3)		
(5) Fee factor		0.0012
(6) Fee due (4)times(5)		

5. International Services

a. Earth Stations

34. Very Small Aperture Terminal (VSAT) Earth Stations, equivalent C-Band Earth Stations and antennas, and earth station systems comprised of very small aperture terminals operate in the 12 and 14 GHz bands and provide a variety of communications services to other stations in the network. *VSAT* systems consist of a network of technically-identical small Fixed-Satellite Earth Stations which often include a larger hub station. VSAT Earth Stations and C-Band Equivalent Earth Stations are authorized pursuant to part 25 of the Commission's rules. *Mobile Satellite Earth Stations,* operating pursuant to part 25 of the Commission's rules under blanket licenses for mobile antennas (transceivers), are smaller than one meter and provide voice or data communications, including position location information for mobile platforms such as cars, buses, or trucks.[165] *Fixed-Satellite Transmit/Receive and Transmit-Only Earth Station antennas,* authorized or registered under part 25 of the Commission's rules, are operated by private and public carriers to provide telephone, television, data, and other forms of communications. Included in this category are telemetry, tracking and control (TT&C) earth stations, and earth station uplinks. For FY 1999, licensees of VSATs, Mobile Satellite Earth Stations, and Fixed-Satellite Transmit/Receive and Transmit-Only Earth Stations will pay a fee of $180 per authorization or registration *as well as a separate fee of $180 for each associated Hub Station.*

35. *Receive-only earth stations.* For FY 1999, there is no regulatory fee for receive-only earth stations.

[165] Mobile earth stations are hand-held or vehicle-based units capable of operation while the operator or vehicle is in motion. In contrast, transportable units are moved to a fixed location and operate in a stationary (fixed) mode. Both are assessed the same regulatory fee for FY 1999.

b. Space Stations (Geostationary Orbit)

36. Geostationary Orbit (also referred to as Geosynchronous) Space Stations are domestic and international satellites positioned in orbit to remain approximately fixed relative to the earth. Most are authorized under part 25 of the Commission's rules to provide communications between satellites and earth stations on a common carrier and/or private carrier basis. In addition, this category includes Direct Broadcast Satellite (DBS) Service which includes space stations authorized under part 100 of the Commission's rules to transmit or re-transmit signals for direct reception by the general public encompassing both individual and community reception. For FY 1999, entities authorized to operate geostationary space stations (including DBS satellites) will be assessed an annual regulatory fee of $130,225 per operational station in orbit. Payment is required for any geostationary satellite that has been launched and tested and is authorized to provide service.

c. Space Stations (Non-Geostationary Orbit)

37. Non-Geostationary Orbit Systems (such as Low Earth Orbit (LEO) Systems) are space stations that orbit the earth in non-geosynchronous orbit. They are authorized under part 25 of the Commission's rules to provide communications between satellites and earth stations on a common carrier and/or private carrier basis. For FY 1999, entities authorized to operate Non-Geostationary Orbit Systems (NGSOs) will be assessed an annual regulatory fee of $180,325 per operational system in orbit. Payment is required for any NGSO System that has one or more operational satellites operational. In our FY 1997 *Report and Order* at paragraph 75 we retained our requirement that licensees of LEOs pay the LEO regulatory fee upon their certification of operation of a single satellite pursuant to section 25.120(d). We require payment of this fee following commencement of operations of a system's first satellite to insure that we recover our regulatory costs related to LEO systems from licensees of these systems as early as possible so that other regulatees are not burdened with these costs any longer than necessary. Because section 25.120(d) has significant implications beyond regulatory fees (such as whether the entire planned cluster is operational in accordance with the terms and conditions of the license) we are clarifying our current definition of an operational LEO satellite to prevent misinterpretation of our intent as follows:

> Licensees of Non-Geostationary Satellite Systems (such as LEOs) are assessed a regulatory fee upon the commencement of operation of a system's first satellite as reported annually pursuant to sections 25.142(c), 25.143(e), 25.145(g), or upon certification of operation of a single satellite pursuant to section 25.120(d).

d. International Bearer Circuits

38. Regulatory fees for International Bearer Circuits are to be paid by facilities-based common carriers (either domestic or international) activating the circuit in any transmission facility for the provision of service to an end user or resale carrier. Payment of the fee for bearer circuits by non-common carrier submarine cable operators is required for circuits sold on an indefeasible right of use (IRU) basis or leased to any customer, including themselves or their affiliates, other than an international common carrier authorized by the Commission to provide U.S. international common carrier services. *Compare* FY 1994 *Report and Order* at 5367. Payment of the international bearer circuit fee is also required by non-common carrier satellite operators for circuits sold or leased to any customer, including themselves or their affiliates, other than an international common carrier authorized by the Commission to provide U.S. international common carrier services. The fee is based upon active 64 kbps circuits, or equivalent circuits. Under this formulation, 64 kbps circuits or their equivalent will be assessed a fee. Equivalent circuits include the 64 kbps circuit equivalent of larger bit stream

circuits. For example, the 64 kbps circuit equivalent of a 2.048 Mbps circuit is 30 64 kbps circuits. Analog circuits such as 3 and 4 kHz circuits used for international service are also included as 64 kbps circuits. However, circuits derived from 64 kbps circuits by the use of digital circuit multiplication systems are not equivalent 64 kbps circuits. Such circuits are not subject to fees. Only the 64 kbps circuit from which they have been derived will be subject to payment of a fee. For FY 1999, the regulatory fee is $7.00 for each active 64 kbps circuit or equivalent. For analog television channels we will assess fees as follows:

Analog television channel Size in MHz	No. of equivalent 64 kbps circuits
36	630
24	288
18	240

e. International Public Fixed

39. This fee category includes common carriers authorized under part 23 of the Commission's rules to provide radio communications between the United States and a foreign point via microwave or HF troposcatter systems, other than satellites and satellite earth stations, but not including service between the United States and Mexico and the United States and Canada using frequencies above 72 MHz. For FY 1999, International Public Fixed Radio Service licensees will pay a $410 annual regulatory fee per call sign.

f. International (HF) Broadcast

40. This category covers International Broadcast Stations licensed under part 73 of the Commission's rules to operate on frequencies in the 5,950 kHz to 26,100 kHz range to provide service to the general public in foreign countries. For FY 1999, International HF Broadcast Stations will pay an annual regulatory fee of $520 per station license.

Authorization of Service: The authorization or licensing of radio stations, telecommunications equipment, and radio operators, as well as the authorization of common carrier and other services and facilities. Includes policy direction, program development, legal services, and executive direction, as well as support services associated with authorization activities.[166]

Policy and Rulemaking: Formal inquiries, rulemaking proceedings to establish or amend the Commission's rules and regulations, action on petitions for rulemaking, and requests for rule interpretations or waivers; economic studies and analyses; spectrum planning, modeling, propagation-interference analyses, and allocation; and development of equipment standards. Includes policy direction, program development, legal services, and executive direction, as well as support services associated with policy and rulemaking activities.

Enforcement: Enforcement of the Commission's rules, regulations and authorizations, including investigations, inspections, compliance monitoring, and sanctions of all types. Also includes the receipt and disposition of formal and informal complaints regarding common carrier rates and services, the review and acceptance/rejection of carrier tariffs, and the review, prescription and audit of carrier accounting practices. Includes policy direction, program development, legal services, and executive direction, as well as support services associated with enforcement activities.

Public Information Services: The publication and dissemination of Commission decisions and actions, and related activities; public reference and library services; the duplication and dissemination of Commission records and databases; the receipt and disposition of public inquiries; consumer, small business, and public assistance; and public affairs and media relations. Includes policy direction, program development, legal services, and executive direction, as well as support services associated with public information activities.

Attachment H—Factors, measurements and calculations that go into determining station signal contours and associated population coverages

AM Stations: Specific information on each day tower, including field ratio, phasing, spacing and orientation was retrieved, as well as the theoretical pattern RMS figure (mV/m @ 1 km) for the antenna system. The standard, or modified standard if pertinent, horizontal plane radiation pattern was calculated using techniques and methods specified in sections 73.150 and 73.152 of the Commission's rules.[167] Radiation values were calculated for each of 72 radials around the transmitter site (every 5 degrees of azimuth). Next, estimated soil conductivity data was retrieved from a database representing the information in FCC Figure M3. Using the calculated horizontal radiation values, and the retrieved soil conductivity data, the distance to the city grade (5 mV/m) contour was predicted for each of the 72 radials. The resulting distance to city grade contours were used to form a geographical polygon. Population counting was accomplished by determining which 1990 block centroids were contained in the polygon. The sum of the population figures for all enclosed blocks represents the total population for the predicted city grade coverage area.

FM Stations: The maximum of the horizontal and vertical HAAT (m) and ERP (kW) was used. Where the antenna HAMSL was available, it was used in lieu of the overall HAAT figure to calculate specific HAAT figures for each of 72 radials under study. Any available directional pattern information was applied as well, to produce a radial-specific ERP figure. The HAAT and ERP figures were used in conjunction with the propagation curves specified in section 73.313 of the Commission's rules to predict the distance to the city grade (70 dBuV/m or 3.17 mV/m) contour for each of the 72 radials.[168] The resulting distance to city grade contours were used to form a geographical polygon. Population counting was accomplished by determining which 1990 block centroids were contained in the polygon. The sum of the population figures for all enclosed blocks represents the total population for the predicted city grade coverage area.

[FR Doc. 99–8342 Filed 4–5–99; 8:45 am]

BILLING CODE 6712–01–P

[166] Although Authorization of Service is described in this exhibit, it is not one of the activities included as a feeable activity for regulatory fee purposes pursuant to section 9(a)(1) of the Act. 47 U.S.C. 159(a)(1).

[167] 47 U.S.C. 73.150 and 73.152.

[168] 47 U.S.C. 73.313.

FEDERAL COMMUNICATIONS COMMISSION

47 CFR Parts 2, 25

[IB Docket No. 99–67; FCC 99–37]

Implementation of the GMPCS MoU and Petition of the NTIA To Establish Emissions Limits for Mobile and Portable Earth Stations in the 1610–1660.5 MHz Band

AGENCY: Federal Communications Commission.

ACTION: Proposed rule.

SUMMARY: The Commission has proposed rules and policies implementing the international Global Mobile Personal Communications by Satellite (GMPCS) Memorandum of Understanding and Arrangements adopted last spring by the International

Telecommunications Union. Among other things, the Notice proposes to apply our current part 2 equipment certification procedures to terminals used in conjunction with authorized GMPCS systems that are for sale or lease and use in the United States. It also contemplates a customs procedure for allowing terminals to be carried into the United States.

DATES: Comments must be submitted on or before May 3, 1999; reply comments must be submitted on or before May 18, 1999.

ADDRESSES: Federal Communications Commission, 445 Twelfth Street S.W., Washington, DC 20554.

FOR FURTHER INFORMATION CONTACT: Tracey Weisler (202) 418–0744 or Bill Bell (202) 418–0741.

SUPPLEMENTARY INFORMATION: This is a summary of the Commission's Notice of Proposed Rulemaking in IB Docket No. 99–67; FCC 99–37, adopted February 25, 1999 and released March 5, 1999. The complete text of this Notice of Proposed Rulemaking is available for inspection and copying during normal business hours in the FCC Reference Information Center, 445 Twelfth Street, Room CYA257, S.W., Washington, DC 20554. and also may be purchased from the Commissions's copy contractor, International Transcription Service, 1231 20th Street, N.W., Washington, DC 20036, phone: 202–857–3800; facsimile: 202–857–3805.

To file formally in this proceeding, comments can be filed using the Commission's Electronic Comment Filing System (''ECFS'') or by paper copies. *See* Electronic Filing of Documents in Rulemaking Proceedings, 63 FR 24121 (May 1, 1998). Comments filed through the ECFS can be sent as an electronic file via the Internet to <http://www.fcc.gov/e-file/ecfs.html>. Generally, only one copy of an electronic submission must be filed. If multiple docket or rulemaking numbers appear in the caption of this proceeding, however, commenters must transmit one electronic copy of the comments to each docket or rulemaking number referenced in the caption. In completing the transmittal screen, commenters should include their full name, Postal Service mailing address, and the applicable docket or rulemaking number. Parties may also submit an electronic comment by Internet e-mail. To get filing instructions for e-mail comments, commenters should send an e-mail to ecfs@fcc.gov, and should include the following words in the body of the message, ''get form <your e-mail address>.'' A sample form and directions will be sent in reply.

Parties who choose to file by paper must file an original and four copies of each filing. If more than one docket or rulemaking number appear in the caption of this proceeding, commenters must submit two additional copies for each additional docket or rulemaking number. All filings must be sent to the Commission's Secretary, Magalie Roman Salas, Office of the Secretary, Federal Communications Commission, The Portals, 445 Twelfth Street, S.W., Room TW–A325, Washington, DC 20554.

Parties who choose to file by paper should also submit their comments on diskette. These diskettes should be submitted to: Paul Gordon, Office of the Secretary, Federal Communications Commission, The Portals, 445 Twelfth Street, S.W., Room 2C223, Washington, DC 20554. Such a submission should be on a 3.5 inch diskette formatted in an IBM compatible format using WordPerfect 5.1 for Windows or compatible software. The diskette should be accompanied by a cover letter and should be submitted in ''read only'' mode. The diskette should be clearly labelled with the commenter's name, proceeding (including the lead docket number in this case [IB Docket No. 99–67]), type of pleading (comment or reply comment), date of submission, and the name of the electronic file on the diskette. The label should also include the following phrase ''Disk Copy—Not an Original.'' Each diskette should contain only one party's pleading, preferably in a single electronic file. In addition, commenters must send diskette copies to the Commission's copy contractor, International Transcription Service, Inc., 1231 20th Street, N.W., Washington, DC 20037. Comments and reply comments should be captioned using the docket number in this proceeding only.

As required by Section 603 of the Regulatory Flexibility Act, the Commission has prepared an Initial Regulatory Flexibility Analysis (IRFA) of the expected impact on small entities of the proposals suggested in this document.

Summary of Notice of Proposed Rulemaking

The Commission's proposed rulemaking (1) outlines the provisions of the GMPCS MoU and recognizes the need to facilitate transport terminals delivering new international voice, data and broadband services across national borders; (2) seeks comment on the categories of GMPCS terminals that should fall under the ITU definition for purposes of equipment certification; (3) seeks comment on the requirement to certify terminals for sale or lease and use in the United States and how to treat terminals brought into the United States as personal effects for temporary use or transit; (4) seeks comment on the current technical requirements and procedures for earth station licensing under Part 25 and whether to expand those requirements for certification; (5) proposes to adopt NTIA's out-of-band emission proposal for terminals operating in the 1610–1660.5 MHz range; and (6) seeks comment on how best to implement and enforce our new procedures in conjunction with the Commission's Compliance and Information Bureau and the U.S. Customs Service.

Administrative Matters

This is a non-restricted notice and comment rulemaking proceeding. *Ex parte* presentations are permitted, except during the Sunshine Agenda period, provided they are disclosed as provided in the Commission's rules. *See generally* 47 CFR 1.1202, 1.1203, and 1.1206(a). The Sunshine Agenda period is the period of time that commences with the release of public notice that a matter has been placed on the Sunshine Agenda and terminates when the Commission (1) releases the text of a decision or order in the matter; (2) issues a public notice stating that the matter has been deleted from the Sunshine Agenda; or (3) issues a public notice stating that the matter has been returned to the staff for further consideration, whichever occurs first. 47 CFR 1.1202(f). During the Sunshine Agenda period, no presentations, ex parte or otherwise, are permitted unless specifically exempted. 47 CFR 1.1203. Pursuant to applicable procedures set forth in Sections 1.415 and 1.419 of the Commission's Rules, 47 CFR 1.415 and 1.419, interested parties may file comments on or before May 3, 1999 and reply comments on or before May 18, 1999.

To file formally in this proceeding, you must file an original and five copies of all comments, reply comments, and supporting comments. If you want each Commissioner to receive a personal copy of your comments send additional copies to Office of the Secretary, Federal Communications Commission, Washington, DC 20554. Comments and reply comments will be available for public inspection during regular business hours in the Federal Communications Commission, Reference Information Center, Room CYA257, Twelfth Street, S.W., Washington, DC 20554.

Initial Regulatory Flexibility Act Statement

As required by the Regulatory Flexibility Act,[1] the Commission has prepared this present Initial Regulatory Flexibility Analysis of the possible significant economic impact on small entities by the policies and rules proposed in this *Notice of Proposed Rule Making* (''*Notice*''). Written public comments are requested on this IRFA. Comments must be identified as responses to the IRFA and must be filed by the deadlines for comments on the *Notice* provided above. The Commission will send a copy of this *Notice*, including the IRFA, to the Chief Counsel for Advocacy of the Small Business Administration. In addition, the *Notice* and IRFA will be published in the **Federal Register**.

Need for and Objectives of the Proposed Rules

This Notice proposes to extend the FCC's current equipment certification procedure to GMPCS terminals that are to be sold for use in the United States, while allowing terminals manufactured and sold elsewhere to enter the United States for transit or temporary use if they have complied with the GMPCS–MoU notification process and bear the ''GMPCS–MoU ITU Registry'' mark.

Legal Basis

This action is taken pursuant to Sections 4(i), 7(a), 303(c), 303(f), 303(g), and 303(r) of the Communications Act of 1934, as amended, 47 U.S.C. 151, 154(i), 157(a), 303(c), 303(f), 303(g), and 303(r), 307, 309, and 310.

Description and Estimate of the Number of Small Entities to Which the Proposed Rules Will Apply

The RFA directs agencies to provide a description of and, where feasible, an estimate of the number of small entities that may be affected by the proposed rules, if adopted. The RFA generally defines the term ''small entity '' as having the same meaning as the terms ''small business,'' ''small organization,'' and ''small governmental jurisdiction.'' In addition, the term ''small business'' has the same meaning as the term ''small business concern'' under the Small Business Act. A small business concern is one which: (1) is independently owned and operated; (2) is not dominant in its field of operation; and (3) satisfies any additional criteria established by the Small Business Administration (SBA).

The Commission has not developed a definition of small entities applicable to geostationary or non-geostationary orbit fixed-satellite, mobile satellite operators or terminal manufacturers. Therefore, the applicable definition of small entity in the satellite services industry is the definition under the Small Business Administration (SBA) rules applicable to Communications Services ''Not Elsewhere Classified.''[2] This definition provides that a small entity is expressed as one with $11.0 million or less in annual receipts. According to Census Bureau data, there are 848 firms that fall under the category of Communications Services, Not Elsewhere Classified. Of those, approximately 775 reported annual receipts of $11 million or less and qualify as small entities.[3] The Census Bureau category is very broad and commercial satellite services constitute only a subset of its total. Although it is difficult to estimate the number of entities that will be required to or choose to comply with the procedures proposed in this *Notice*, we note that the Commission has licensed 12 entities to provide GMPCS in the United States. Of these licensees, only VITA and LEO One qualify as small businesses.[4] The other entities are not small businesses because they each have revenues in excess of $11 million annually or have parent companies or investors that have revenues in excess of $11 million annually. We request comment on the description and number of small entities that are significantly impacted by this proposal.

Description of Projected Reporting, Recordkeeping and Other Compliance Requirements

In this proceeding, we are proposing to use current forms and procedures to implement new proposed requirements. Therefore, this proposed action may create minimal additional mandatory reporting requirements for license applications and/or new equipment certification requirements for certain sectors of the satellite operator, service provider and equipment manufacturing industry.

Steps Taken to Minimize Significant Economic Impact on Small Entities and Significant Alternatives Considered

It should be noted that the Commission received a petition from the National Telecommunications and Information Agency regarding establishment of an out-of-band emission limit for certain GMPCS terminals in 1998 and comments were later filed by several entities. However, no Petitions for Rulemaking were filed to initiate the MoU portion of this proceeding, and there have been no comments in this proceeding that suggest alternatives to the proposed procedure. Therefore, we request comment on alternative licensing and equipment certification procedures that might minimize the amount of economic impact on small entities.

Federal Rules that May Duplicate, Overlap, or Conflict with the Proposed Rules

None.

Ordering Clauses

Accordingly, It is Ordered that, pursuant to Sections 4(i), 7(a), 303(c), 303(f), 303(g), and 303(r) of the Communications Act of 1934, as amended, 47 U.S.C. 151, 154(i), 157(a), 303(c), 303(f), 303(g), and 303(r), 307, 309(a), 310, NOTICE IS HEREBY GIVEN of our intent to adopt these proposed rule revisions. It is Further Ordered that the Commission's Office of Public Affairs, Reference Operations Division, shall send a copy of this Notice of Proposed Rulemaking, including the Initial Regulatory Flexibility Analysis, to the Chief Counsel for Advocacy of the Small Business Administration, in accordance with Section 603(a) of the Regulatory Flexibility Act, 5 U.S.C. 601 *et. seq.* (1981).

List of Subjects

47 CFR Part 2

Communications equipment.

47 CFR Part 25

Communications equipment, Satellites.

Federal Communications Commission.

Magalie Roman Salas,

Secretary.

[FR Doc. 99–8499 Filed 4–5–99; 8:45 am]

BILLING CODE 6712–01–P

[1] 5 U.S.C. 603.

[2] *See* 13 CFR 121.201, Standard Industrial Classification (SIC) Code 4899.

[3] U.S. Bureau of the Census, U.S. Department of Commerce, 1992 Census of Transportation, Communications, and Utilities, UC92–S–1, Subject Series, Establishment and Firm Size, Table 2D, Employment Size of Firms: 1992, SIC Code 4899 (issued May 1995).

[4] *See Notice of Proposed Rulemaking,* IB Docket No. 96–426, 11 FCC Rcd 19841 (1996) at 44.

DEPARTMENT OF TRANSPORTATION

National Highway Traffic Safety Administration

49 CFR Part 578

[Docket No. NHTSA 99–5448]

RIN 2127–AH48

Civil Penalties

AGENCY: National Highway Traffic Safety Administration (NHTSA), DOT.

ACTION: Notice of proposed rulemaking.

SUMMARY: This document proposes to adjust certain civil penalties authorized for violations of statutes that we enforce. The Federal Civil Monetary Penalty Inflation Adjustment Act of 1990, as amended by the Debt Collection Improvement Act of 1996, requires us to take this action periodically. The largest adjustments would occur in penalties for related series of violations of 49 U.S.C. Chapter 301—Motor Vehicle Safety, and 49 U.S.C. Chapter 325—Bumper Standards. The maximum penalties for violations of Chapters 301 and 325 would be increased from $880,000 to $925,000 according to the formulae set forth in the statute. Adjustments in two other penalties would be made as well. These adjusted penalties would apply to violations occurring on or after the effective date of the final rule.

DATES: Date that comments are due: May 21, 1999. Proposed effective date: 45 days after publication of final rule in the **Federal Register**.

FOR FURTHER INFORMATION CONTACT: Taylor Vinson, Office of Chief Counsel, NHTSA, telephone (202) 366–5263, facsimile (202) 366–3820, electronic mail ''TVinson@nhtsa.dot.gov'', 400 Seventh Street, SW, Washington, DC 20590.

SUPPLEMENTARY INFORMATION:

Background

In order to preserve the remedial impact of civil penalties and to foster compliance with the law, the Federal Civil Monetary Penalty Inflation Adjustment Act of 1990 ((''Adjustment Act''), 28 U.S.C. 2461 note, Pub. L. 101–410), as amended by the Debt Collection Improvement Act of 1996 (''Collection Act,'' Pub. L. 104–134), requires us and other Federal agencies to regularly adjust certain civil penalties for inflation. Under these laws, each agency must make an initial inflationary adjustment for all applicable civil penalties, and must make further adjustments of these penalty amounts at least once every four years. The Collection Act limited the initial increase to 10 percent of the penalty being adjusted.

Our initial adjustment of civil penalties under these legislative authorities was published on February 4, 1997 (62 FR 5167). We established 49 CFR Part 578, *Civil Penalties,* which applies to violations that occur on and after March 6, 1997. These adjustments resulted in the maximum permissible increases of 10 percent. For example, the maximum penalty of $1,000 for each violation of 49 U.S.C. 30112(a), up to $800,000 for a related series of violations, was adjusted to $1,100 and $880,000.

In accordance with the mandate to make further adjustments of civil penalty amounts at least once every four years, we propose to adjust some of our penalties now in order to enhance their deterrent effect.

Method of Calculation

Under the Adjustment Act as amended by the Collection Act, we determine the inflation adjustment for each applicable civil penalty by increasing the maximum civil penalty amount per violation by the cost-of-living adjustment, and then applying a rounding factor. Section 5(b) of the Adjustment Act defines the ''cost-of-living'' adjustment as:

> the percentage (if any) for each civil monetary penalty by which—
>
> (1) the Consumer Price Index for the month of June of the calendar year preceding the adjustment exceeds
>
> (2) the Consumer Price Index for the month of June of the calendar year in which the amount of such civil monetary penalty was last set or adjusted pursuant to law.

Since we plan to make the current adjustment effective before July 1, 1999, the ''Consumer Price Index (CPI) for the month of June of the calendar year preceding the adjustment'' would be the CPI for June 1998. This figure is 488.2. NHTSA's penalties were initially adjusted based on the CPI figure for June 1996. Since the intent of the legislation is for agencies to adjust their civil penalties to account for increases in inflation in order to preserve their remedial impact, we believe that this is realized by adjusting civil penalties according to the CPI base upon ''which the amount of such civil monetary penalty was last set or adjusted pursuant to law.'' This base was the CPI for June 1996. This was 469.5. The factor that we should use in calculating the increase, then, is 488.2 divided by 469.5, or 1.0398296. Any calculated increase under this adjustment is then subject to a specific rounding formula set forth in sec. 5(a) of the Adjustment Act. Under the formula:

> Any increase shall be rounded to the nearest—
>
> (1) Multiple of $10 in the case of penalties less than or equal to $100;
>
> (2) Multiple of $100 in the case of penalties greater than $100 but less than or equal to $1,000;
>
> (3) Multiple of $1,000 in the case of penalties greater than $1,000 but less than or equal to $10,000;
>
> (4) Multiple of $5,000 in the case of penalties greater than $10,000 but less than or equal to $100,000;
>
> (5) Multiple of $10,000 in the case of penalties greater than $100,000 but less than or equal to $200,000; and
>
> (6) Multiple of $25,000 in the case of penalties greater than $200,000.

Penalties That We Are Increasing

Upon review, we have concluded that application of the formulae permit some of our penalties to be increased at this time. We are proposing this action before the passage of four years in order to enhance the deterrent effect of these penalties because of their importance to our enforcement programs. Even with these increases, these penalties appear less than adequate as a full deterrent to violations of the statutes that we enforce. For example, the maximum penalty for a related series of violations under the National Traffic and Motor Vehicle Safety Act of 1966 as amended in 1974 was $800,000. It would have increased more than threefold, to $2.45 million, in June 1996 if adjusted for inflation. However, the adjustment was capped at $880,000. Further, under this aggregate penalty ceiling, on a per vehicle basis the maximum penalty amounts to less than one dollar per vehicle where a substantial fleet was in violation of the Safety Act.

Odometer tampering and disclosure. As shown above, sec. 5(a)(3) of the amended Adjustment Act permits an increase rounded ''to the nearest multiple of $1,000'' for penalties between $1,000 and $10,000. Under 49 CFR 578.6(f)(2), a penalty of $1,650 may be imposed (the original penalty was $1,500). A figure of $1,716 results when the inflation factor is applied. The nearest multiple of $1,000 is $2,000. Therefore, we propose to amend 49 CFR 578.6(f)(2) so that a person who violates a requirement on odometer tampering and disclosure, with intent to defraud, will now be liable for three times the actual damages or $2,000, whichever is greater.

Consumer information. The rounding provisions of section 5(a)(6) of the Adjustment Act permit raises to the nearest multiple of $25,000 where the penalty exceeds $200,000. Section

578.6(d) establishes a maximum penalty of $440,000 (originally $400,000) for a related series of violations of consumer information regarding crashworthiness and damage susceptibility. The inflation factor applied to $440,000 gives $457,525. As the nearest $25,000 multiple is $450,000, we propose adjusting the penalty to this amount.

Violations of safety and bumper requirements. Both 49 CFR 578.6(a) and 49 CFR 578.6(c)(2) establish a maximum penalty of $880,000 (originally $800,000) for related series of violations of Chapter 301—Motor Vehicle Safety, and Chapter 325—Bumper Standards. Multiplying this figure by the inflation factor gives $915,050. Section 5(a)(6) permits a rounding to the nearest multiple of $25,000, which is $925,000, and we are proposing adjusting the penalties to this amount.

Effective Date

These amendments would be effective 45 days after publication in the **Federal Register** and would apply to violations of pertinent statutes and regulations occurring on and after that date.

Request for Comments

Interested persons are invited to submit comments on the proposal and other approaches to adjustment of penalties for inflation. It is requested that two copies be submitted.

All comments must not exceed 15 pages in length. (49 CFR 553.21). Necessary attachments may be appended to these submissions without regard to the 15-page limit. This limitation is intended to encourage commenters to detail their primary arguments in a concise fashion.

If a commenter wishes to submit certain information under a claim of confidentiality, three copies of the complete submission, including purportedly confidential business information, should be submitted to the Chief Counsel, NHTSA, at the street address given above, and seven copies from which the purportedly confidential information has been deleted should be submitted to the Docket Section. A request for confidentiality should be accompanied by a cover letter setting forth the information specified in the agency's confidential business information regulation. 49 CFR part 512.

All comments received before the close of business on the comment closing date indicated above for the proposal will be considered, and will be available for examination in the docket at the above address both before and after that date. To the extent possible, comments filed after the closing date will also be considered. Comments received too late for consideration in regard to the final rule will be considered as suggestions for further rulemaking action. Comments on the proposal will be available for inspection in the docket. The NHTSA will continue to file relevant information as it becomes available in the docket after the closing date, and it is recommended that interested persons continue to examine the docket for new material.

Those persons desiring to be notified upon receipt of their comments in the rules docket should enclose a self-addressed, stamped postcard in the envelope with their comments. Upon receiving the comments, the docket supervisor will return the postcard by mail.

Rulemaking Analyses and Notices

Executive Order 12866 and DOT Regulatory Policies and Procedures

We have considered the impact of this rulemaking action under E.O. 12866 and the Department of Transportation's regulatory policies and procedures. This rulemaking document was not reviewed under E.O. 12866, ''Regulatory Planning and Review.'' This action is limited to the adoption of adjustments of civil penalties under statutes that the agency enforces, and has been determined to be not ''significant'' under the Department of Transportation's regulatory policies and procedures.

Regulatory Flexibility Act

We have also considered the impacts of this notice under the Regulatory Flexibility Act. I certify that this proposed rule would have no significant economic impact on a substantial number of small entities. The following is my statement providing the factual basis for the certification (5 U.S.C. 605(b)). The proposed amendments primarily affect manufacturers of motor vehicles. Manufacturers of motor vehicles are generally not small businesses within the meaning of the Regulatory Flexibility Act.

The Small Business Administration's regulations define a small business in part as a business entity ''which operates primarily within the United States.'' (13 CFR 121.105(a)) SBA's size standards are organized according to Standard Industrial Classification Codes (SIC), SIC Code 3711 ''Motor Vehicles and Passenger Car Bodies'' has a small business size standard of 1,000 employees or fewer.

For manufacturers of passenger cars and light trucks, NHTSA estimates there are at most five small manufacturers of passenger cars in the U.S. Since each manufacturer serves a niche market, often specializing in replicas of ''classic'' cars, production for each manufacturer is fewer than 100 cars per year. Thus, there are at most 500 cars manufactured per year by U.S. small businesses.

In contrast, in 1999, there are approximately nine large manufacturers producing passenger cars, and light trucks in the U.S. Total U.S. manufacturing production per year is approximately 15 to 15 and a half million passenger cars and light trucks per year. We do not believe small businesses manufacture even 0.1 percent of total U.S. passenger car and light truck production per year.

Further, small organizations and governmental jurisdictions would not be significantly affected as the price of motor vehicles ought not to change as the result of this proposed rule. As explained above, this action is limited to the proposed adoption of a statutory directive, and has been determined to be not ''significant'' under the Department of Transportation's regulatory policies and procedures.

Finally, this action would not affect our civil penalty policy under the Small Business Regulatory Enforcement Fairness Act (62 FR 37115, July 10, 1997). We shall continue to consider the appropriateness of the penalty to the size of the business charged.

Paperwork Reduction Act

In accordance with the Paperwork Reduction Act of 1980 (Pub. L. 96–511), we state that there are no requirements for information collection associated with this rulemaking action.

National Environmental Policy Act

We have also analyzed this rulemaking action under the National Environmental Policy Act and determined that it has no significant impact on the human environment.

Executive Order 12612 (Federalism)

We have analyzed this proposed rule in accordance with the principles and criteria contained in E.O. 12612, and have determined that it has no significant federalism implications to warrant the preparation of a Federalism Assessment.

Civil Justice Reform

This proposed rule does not have a retroactive or preemptive effect. Judicial review of a rule based on this proposal may be obtained pursuant to 5 U.S.C. 702. That section does not require that a petition for reconsideration be filed prior to seeking judicial review.

Unfunded Mandates Reform Act of 1995

The Unfunded Mandates Reform Act of 1995 (Pub. L. 104–4) requires agencies to prepare a written assessment of the cost, benefits and other effects of proposed or final rules that include a Federal mandate likely to result in the expenditure by State, local, or tribal governments, in the aggregate, or by the private sector, of more than $100 million annually. Because this rule would not have a $100 million effect, no Unfunded Mandates assessment will be prepared.

List of Subjects in 49 CFR Part 578

Imports, Motor vehicle safety, Motor vehicles, Rubber and Rubber Products, Tires, Penalties.

PART 578—CIVIL PENALTIES

1. The authority citation for 49 CFR Part 578 would continue to read as follows:

Authority: Pub. L. 101–410, Pub. L. 104–134, 49 U.S.C. 30165, 30505, 32308, 32309, 32507, 32709, 32710, 32912, and 33115; delegation of authority at 49 CFR 1.50.

2. Section 578.6 would be amended by revising the last sentence in paragraphs (a) and (d), revising paragraphs (c)(2) and (f)(2), and republishing the headings of paragraphs (a), (c), (d), and (f) to read as follows:

§ 578.6 Civil penalties for violations of specified provisions of Title 49 of the United States Code.

(a) *Motor Vehicle Safety.* * * * The maximum civil penalty under this paragraph for a related series of violations is $925,000.

* * * * *

(c) *Bumper standards.* (1) * * *

(2) The maximum civil penalty under this paragraph for a related series of violations is $925,000.

(d) *Consumer information regarding crashworthiness and damage susceptibility.* * * * The maximum penalty under this paragraph for a related series of violations is $450,000.

* * * * *

(f) *Odometer tampering and disclosure.* * * *

(2) A person that violates 49 U.S.C. Chapter 327 or a regulation prescribed or order issued thereunder, with intent to defraud, is liable for three times the actual damages or $2,000, whichever is greater.

Issued on: March 29, 1999.

Kenneth N. Weinstein,

Associate Administrator for Safety Assurance.

[FR Doc. 99–8140 Filed 4–5–99; 8:45 am]

BILLING CODE 4910–59–P

Notices

Federal Register
Vol. 64, No. 65
Tuesday, April 6, 1999

This section of the FEDERAL REGISTER contains documents other than rules or proposed rules that are applicable to the public. Notices of hearings and investigations, committee meetings, agency decisions and rulings, delegations of authority, filing of petitions and applications and agency statements of organization and functions are examples of documents appearing in this section.

DEPARTMENT OF AGRICULTURE

Forest Service

Southwest Oregon Province Interagency Executive Committee (PIEC) Advisory Committee

AGENCY: Forest Service, USDA.

ACTION: Notice of meeting.

SUMMARY: The Southwest Oregon PIEC Advisory Committee will meet on April 21, 1999 in North Bend, Oregon at the Coos Bay Bureau of Land Management Office at 1300 Airport Lane. The meeting will begin at 9:00 a.m. and continue until 4:30 p.m. Agenda items to be covered include: (1) Clear Water Act requirements; (2) Critique of February 23 PAC meeting; (3) Update on River Basin watershed restoration strategy; (4) Public comment; and (5) Current issues as perceived by Advisory Committee members.

FOR FURTHER INFORMATION CONTACT: Direct questions regarding this meeting to Chuck Anderson, Province Advisory Committee Coordinator, USDA, Forest Service, Rogue River National Forest, 333 W. 8th Street, Medford, Oregon 97501, phone (541 (858–2322).

Dated: March 29, 1999.

Charles J. Anderson,

Acting Designated Federal Official.

[FR Doc. 99–8463 Filed 4–5–99; 8:45 am]

BILLING CODE 3410–11–M

DEPARTMENT OF AGRICULTURE

National Agricultural Statistics Service

Notice of Invitation for Nominations to the Advisory Committee on Agriculture Statistics

AGENCY: National Agricultural Statistics Service, USDA.

ACTION: Solicitation of nomination for Advisory Committee on Agriculture Statistics Membership.

SUMMARY: In accordance with the Federal Advisory Committee Act, 5 U.S.C. App. 2, this notice announces an invitation from the Office of the Secretary of Agriculture for nominations to the Advisory Committee on Agriculture Statistics.

Effective October 1, 1996, responsibility for the census of agriculture program was transferred to USDA. Responsibility for the Advisory Committee on Agriculture Statistics was transferred from the Department of Commerce to USDA when the National Agricultural Statistics Service (NASS) received funding and responsibility for the census of agriculture beginning in fiscal year 1997. The reestablishment of this Committee is in the public interest in accordance with the duties the law imposes on USDA.

The purpose of the Committee is to advise the Secretary of Agriculture on the scope, timing, content, etc. of the periodic censuses and surveys of agriculture, other related surveys, and the types of information to obtain from respondents concerning agriculture. The Committee also prepares recommendations regarding the content of agriculture reports and presents the views and needs for data for major suppliers and users of agriculture statistics.

The Committee draws on the experience and expertise of its members to form a collective judgment concerning agriculture data collected and the statistics issued by NASS. This input is vital to keep current with shifting data needs in the rapidly changing agricultural environment and keep NASS informed of emerging developments and issues in the agriculture community that can affect agricultural statistics activities.

The Committee, appointed by the Secretary of Agriculture, shall consist of 25 members representing a broad range of disciplines and interests, including, but not limited to, representatives of national farm organizations, agricultural economists, rural sociologists, farm policy analysts, educators, State agriculture representatives, and agriculture-related business and marketing experts.

Terms of membership on the Committee will be staggered every 2 years. Initially, approximately one-half of the members selected by the Secretary in this, the first Advisory Committed on Agriculture selection process, will service a 1-year term and the other half a 2-year term. Members selected after this year will serve a full 2-year term. The Chairperson of the Committed shall be selected by members to serve a 1-year term.

Equal opportunity practices, in line with USDA policies, will be followed in all membership appointments to the Committee. To ensure that the recommendations of the Committee have taken into account the needs of the diverse groups served by USDA, membership shall include, to the extent practicable, individuals with demonstrated ability to represent minorities, women, and persons with disabilities.

Persons nominated for the Advisory Committee on Agriculture Statistics will be required to complete and submit an Advisory Committee Membership Background Information questionnaire.

The duties of the Committee are solely advisory. The Committee will make recommendations to the Secretary of Agriculture with regards to the agricultural statistics program of NASS, and such other matters as it may deem advisable, or which the Secretary of Agriculture, Under Secretary for Research, Education, and Economics, or the Administrator of NASS may request. The Committee will meet at least annually. All meetings are open to the public. Committee members will be reimbursed for official travel expenses only.

DATES: Nominations must be received by May 6, 1999 to be assured of consideration.

Nominations, Additional Information, or Comments

Nominations should include the following information: name, title, address, telephone number, and organization, and should be e-mailed to hq__aa@nass.usda.gov, faxed to (202) 720-9013, OR telephoned to Rich Allen, Associate Administrator, NASS, at (202) 720–4333. Each person nominated is required to complete an Advisory Committee Membership Information questionnaire. This form may be requested by telephone, fax, or e-mail using the information above. Forms are also available on the Internet through the ''Agency Information,'' ''Advisory Committee on Agriculture Statistics'' options of the NASS Home Page at

http://www.usda.gov/nass. Completed questionnaires may be faxed to the number above, mailed, or completed and e-mailed directly from the Internet side.

All mailed correspondence should be sent to Rich Allen, Associate Administrator, National Agricultural Statistics Service, U.S. Department of Agriculture, 1400 Independence Avenue, SW, Room 4117 South Building, Washington, DC 20250–2000.

Send questions, comments, and requests for additional information to the e-mail address, fax number, or address listed above.

Signed at Washington, DC, March 31, 1999.

Donald M. Bay,

Administrator, National Agricultural Statistics Service.

[FR Doc. 99–8381 Filed 4–5–99; 8:45 am]

BILLING CODE 3410–20–M

COMMISSION ON CIVIL RIGHTS

Sunshine Act Meeting

AGENCY: U.S. Commission on Civil Rights.

DATE AND TIME: Friday, April 16, 1999, 8:30 a.m.

PLACE: U.S. Commission on Civil Rights, 624 Ninth Street, N.W., Room 540, Washington, DC 20425.

STATUS: .

Agenda

I. Approval of Agenda

II. Approval of Minutes of March 5, 1999 Meeting

III. Announcements

IV. Staff Director's Report

V. ''Equal Educational Opportunity and Nondiscrimination for Minority Students: Federal Enforcement of Title VI in Ability Grouping Practices'' Report

VI. State Advisory Reports

- ''Civil Rights Issues Facing the Blind and Visually Impaired in Illinois'' Report
- ''Police Protection of the African American Community in Chicago: An Update'' (Illinois)

VII. Future Agenda Items

CONTACT PERSON FOR FURTHER INFORMATION: David Aronson, Press and Communications (202) 376–8312.

Stephanie Y. Moore,

General Counsel.

[FR Doc. 99–8610 Filed 4–2–99; 2:01 pm]

BILLING CODE 6335–01–M

DEPARTMENT OF COMMERCE

Submission for OMB Review; Comment Request

The Department of Commerce (DOC) has submitted to the Office of Management and Budget (OMB) for clearance the following proposal for collection of information under provisions of the Paperwork Reduction Act (44 U.S.C. Chapter 35).

Agency: Bureau of Export Administration (BXA).

Title: Survey of U.S. Chemical Industry to Assist in Compliance Activities Regarding Certain Provisions of the Chemical Weapons Convention.

Agency Form Number: None.

OMB Approval Number: 0694–New.

Type of Request: New collection.

Burden: 50 hours.

Average Time Per Response: 30 minutes per response.

Number of Respondents: 100 respondents.

Needs and Uses: The Chemical Weapons Convention is a multilateral arms control treaty that seeks to achieve an international ban on chemical weapons. This collection of information is necessary in order to assist efforts by U.S. government officials to ensure that the U.S. is and will be in compliance with certain provisions of the Chemical Weapons Convention (CWC) Treaty.

Affected Public: Federal government, businesses or other for-profit institutions.

Respondent's Obligation: Voluntary.

OMB Desk Officer: David Rostker (202) 395–3897.

Copies of the above information collection proposal can be obtained by calling or writing Linda Engelmeier, DOC Forms Clearance Officer, Office of the Chief Information Officer, (202) 482–3272, Department of Commerce, Room 5327, 14th and Constitution Avenue, NW, Washington, D.C. 20230.

Written comments and recommendations for the proposed information collection should be sent within 30 days of publication of this notice to David Rostker, OMB Desk Officer, Room 10202, New Executive Office Building, 725 17th Street, N.W., Washington, D.C. 20230.

Dated: March 31, 1999.

Linda Engelmeier,

Departmental Forms Clearance Officer, Office of the Chief Information Officer.

[FR Doc. 99–8428 Filed 4–5–99; 8:45 am]

BILLING CODE 3510–33–P

DEPARTMENT OF COMMERCE

Submission For OMB Review; Comment Request

DOC has submitted to the Office of Management and Budget (OMB) for clearance the following proposal for collection of information under the provisions of the Paperwork Reduction Act (44 U.S.C. chapter 35).

Agency: Bureau of the Census.

Title: Census 2000 Maritime Enumeration.

Form Number(s): D–34, D–47.

Agency Approval Number: Not available.

Type of Request: New collection.

Burden: 66 hours.

Number of Respondents: 810.

Avg Hours Per Response: D–34—2 minutes, D–47—5 minutes.

Needs and Uses: Planning is currently underway for the Census 2000, which the Census Bureau will conduct on April 1, 2000. The Census Bureau must provide everyone in the United States and Outlying Areas the opportunity to be counted in the Census 2000, including persons on U.S. flag oceangoing vessels.

Based on addresses provided by the Maritime Administration (MARAD) and other contacts, the Census Bureau will mail enumeration packages, which include multiple copies of Form D–23, ''Shipboard Census Report'' (SCR) to U.S. flag maritime ship current operators, who will forward the census materials to the ship's captains/masters, who will in turn distribute the SCRs to the ship's officers, crew, and passengers for completion. (The SCR is cleared separately under OMB approval number 0607–0856.) This request is for clearance of Forms D–34, ''Census 2000 Information for American Flag Vessels'' and D–47, ''Census 2000 Location Report for American Flag Vessels.'' These forms will be used in the administration of the enumeration of the U.S. shipboard population. Each current operator is asked to complete Form D–34 if he/she needs additional enumeration materials for other vessels. Each ship's captain/master will complete Form D-47 to note the ship's location.

The Census Bureau uses the information on Form D–34 to supplement our mailing list for maritime vessels. We use the information on Form D–47 to correctly assign individuals aboard ship who report the vessel as their usual residence to the appropriate geographic area associated with the ship.

Affected Public: American flag vessel owners/operators and ship's captains/masters.

Frequency: One time.

Respondent's Obligation: Mandatory.

Legal Authority: Title 13, United States Code, Sections 141, 193, 221, and 222.

OMB Desk Officer: Nancy Kirkendall, (202) 395–7313.

Copies of the above information collection proposal can be obtained by calling or writing Linda Engelmeier, DOC Forms Clearance Officer, (202) 482–3272, Department of Commerce, room 5033, 14th and Constitution Avenue, NW, Washington, DC 20230.

Written comments and recommendations for the proposed information collection should be sent within 30 days of publication of this notice to Nancy Kirkendall, OMB Desk Officer, room 10201, New Executive Office Building, Washington, DC 20503.

Dated: March 31, 1999.

Linda Engelmeier,

Departmental Forms Clearance Officer, Office of the Chief Information Officer.

[FR Doc. 99–8445 Filed 4–5–99; 8:45 am]

BILLING CODE 3510–07–P

DEPARTMENT OF COMMERCE

Bureau of the Census

Annual Survey of State and Local Government Finance

ACTION: Proposed collection; comment request.

SUMMARY: The Department of Commerce, as part of its continuing effort to reduce paperwork and respondent burden, invites the general public and other Federal agencies to take this opportunity to comment on proposed and/or continuing information collections, as required by the Paperwork Reduction Act of 1995, Public Law 104–13 (44 U.S.C. 3506(c)(2)(A)).

DATES: Written comments must be submitted on or before June 7, 1999.

ADDRESSES: Direct all written comments to Linda Engelmeier, Departmental Forms Clearance Officer, Department of Commerce, Room 5033, 14th and Constitution Avenue, NW, Washington, DC 20230.

FOR FURTHER INFORMATION CONTACT: Requests for additional information or copies of the information collection instrument(s) and instructions should be directed to David Kellerman, Chief, Finance Branch, Governments Division, U.S. Bureau of the Census, Washington, DC 20233–6800 [(301) 457–1502].

SUPPLEMENTARY INFORMATION:

I. Abstract

The Annual Survey of State and Local Government Finance collects data on state government finances and estimates of local government revenue, expenditures, debt, and assets, nationally and within state areas. Data are collected for all agencies, departments, and institutions of the fifty state governments and for a sample of all local governments (counties, municipalities, townships, and special districts). The forms and procedures are similar to those used in previous annual surveys. Data for school districts are collected under a separate survey.

Results of this survey are used by the Bureau of Economic Analysis to develop the public sector components of the National Income and Product Accounts. Other Federal agencies that make frequent use of these data include the U.S. Federal Reserve Board, the Congressional Research Service, the General Accounting Office, and the Department of Justice. Other users include state and local government executives and legislators, policy makers, economists, researchers, and the general public.

II. Method of Collection

Canvass methodology consists of a mail out/mail back questionnaire. Responses will be screened manually, then put into an electronic format. Telephone follow-up is used to contact non-respondents and, as necessary, to correct apparent errors and incorrect responses. Other methods used to collect data and maximize response include central data collection and electronic reporting.

III. Data

OMB Number: 0607–0585.

Form Number: F–5, F–5A, F–11, F–12, F–13, F–21, F–22, F–25, F–28, F–29, F–32, F–42.

Type of Review: Regular.

Affected Public: State and local governments.

Estimated Number of Respondents: 7,459.

Estimated Time Per Response: 3.5 hours.

Estimated Total Annual Burden Hours: 22,798.

Estimated Total Annual Cost: Cost to respondents is estimated to be $353,369.

Respondent's Obligation: Voluntary.

Legal Authority: Title 13, sections 161 and 182.

IV. Request for Comments

Comments are invited on: (a) Whether the proposed collection of information is necessary for the proper performance of the functions of the agency, including whether the information shall have practical utility; (b) the accuracy of the agency's estimate of the burden (including hours and cost) of the proposed collection of information; (c) ways to enhance the quality, utility, and clarity of the information to be collected; and (d) ways to minimize the burden of the collection of information on respondents, including through the use of automated collection techniques or other forms of information technology.

Comments submitted in response to this notice will be summarized and/or included in the request for OMB approval of this information collection; they also will become a matter of public record.

Dated: March 31, 1999.

Linda Engelmeier,

Departmental Forms Clearance Officer, Office of the Chief Information Officer.

[FR Doc. 99–8447 Filed 4–5–99; 8:45 am]

BILLING CODE 3510–07–P

DEPARTMENT OF COMMERCE

Bureau of Export Administration

Firearms Convention

ACTION: Proposed collection; comment request.

SUMMARY: The Department of Commerce, as part of its continuing effort to reduce paperwork and respondent burden, invites the general public and other Federal agencies to take this opportunity to comment on proposed and/or continuing information collections, as required by the Paperwork Reduction Act of 1995, Public Law 104–13 (44 U.S.C. 3506(c)(2)(A)).

DATES: Written comments must be submitted on or before June 7, 1999.

ADDRESSES: Direct all written comments to Linda Engelmeier, Departmental Clearance Officer, Department of Commerce, Office of the Chief Information Officer, Room 5327, 14th and Constitution Avenue, NW, Washington, DC 20230. Her e mail address is LEngelme@doc.gov.

FOR FURTHER INFORMATION CONTACT: Requests for additional information or copies of the information collection instrument(s) and instructions should be directed to Dawnielle Battle, BXA Information Collection Liaison, Department of Commerce, Room 6881, 14th & Constitution Avenue, NW, Washington, DC 20230.

SUPPLEMENTAL INFORMATION:

I. Abstract

Regulations for the Control of the International Movement of Firearms, Their Parts and Components and Ammunition (OAS Model Regulations), are designed to promote harmonized procedures for import and export controls over the legal international movement of firearms. The Model Regulations and the Firearms Convention require the government of importing States to issue an Import Certificate to the importer of firearms and the government of exporting States to issue licenses for the firearms.

II Method of Collection

Written notification and recordkeeping.

III. Data

OMB Number: 0694–0114.

Form Number: N/A.

Type of Review: Regular submission.

Affected Public: Individuals, businesses or other for-profit and not-for-profit institutions.

Estimated Number of Respondents: 833.

Estimated Time Per Response: 5 to 45 minutes per response.

Estimated Total Annual Burden Hours: 179.

Estimated Total Annual Cost: $0—no capital expenditures are required.

IV. Request for Comments

Comments are invited on: (a) Whether the proposed collection of information is necessary for the proper performance of the functions of the agency, including whether the information shall have practical utility; (b) the accuracy of the agency's estimate of the burden (including hours and cost) of the proposed collection of information; (c) ways to enhance the quality, utility, and clarity of the information to be collected; and (d) ways to minimize the burden of the collection of information on respondents, including through the use of automated collection techniques or other forms of information technology. Comments submitted in response to this notice will be summarized and/or included in the request for OMB approval of this information collection; they will also become a matter of public record.

Dated: March 31, 1999.

Linda Engelmeier,

Departmental Forms Clearance Officer, Office of the Chief Information Officer.

[FR Doc. 99–8426 Filed 4–5–99; 8:45 am]

BILLING CODE 3510–33–P

DEPARTMENT OF COMMERCE

Bureau of Export Administration

Commercial Encryption Items Under the Jurisdiction of the Department of Commerce

ACTION: Proposed collection; comment request.

SUMMARY: The Department of Commerce, as part of its continuing effort to reduce paperwork and respondent burden, invites the general public and other Federal agencies to take this opportunity to comment on proposed and/or continuing information collections, as required by the Paperwork Reduction Act of 1995, Public Law 104–13 (44 U.S.C. 3506(c)(2)(A)).

DATES: Written comments must be submitted on or before June 7, 1999.

ADDRESSES: Direct all written comments to Linda Engelmeier, Departmental Clearance Officer, Office of the Chief Information Officer, Department of Commerce, Room 5327, 14th and Constitution Avenue, NW, Washington, DC 20230. Her ''e'' mail address is LEngelme@doc.gov.

FOR FURTHER INFORMATION CONTACT: Requests for additional information or copies of the information collection instrument(s) and instructions should be directed to Dawnielle Battle, BXA ICB Liaison, Department of Commerce, Room 6881, 14th and Constitution Avenue, NW, Washington, DC, 20230.

SUPPLEMENTAL INFORMATION:

I. Abstract

The Export Export Administration Regulations (EAR) set forth the licensing policy for exports and reexports of encryption commodities and software to U.S. subsidiaries, insurance companies, health and medical end-users, on-line merchants and foreign commercial firms. The information required is used in making licensing decisions. A recent rulemaking reduced paperwork by eliminating the following: (1) key recovery agent requirements; (2) business and marketing plan requirement for non-recovery items; and (3) six month progress reviews.

II. Method of Collection

Typed or by Fax.

III. Data

OMB Number: 0694–0104.

Form Number: BXA–748P.

Type of Review: Regular submission for extension of a currently approved collection.

Affected Public: Individuals, businesses or other for-profit and not-for-profit institutions.

Estimated Number of Respondents: 260.

Estimated Time Per Response: 15 minutes to 5½ hours per response.

Estimated Total Annual Burden Hours: 703.

Estimated Total Annual Cost: $0—no capital expenditures are required.

IV. Request for Comments

Comments are invited on: (a) Whether the proposed collection of information is necessary for the proper performance of the functions of the agency, including whether the information shall have practical utility; (b) the accuracy of the agency's estimate of the burden (including hours and cost) of the proposed collection of information; (c) ways to enhance the quality, utility, and clarity of the information to be collected; and (d) ways to minimize the burden of the collection of information on respondents, including through the use of automated collection techniques or other forms of information technology.

Comments submitted in response to this notice will be summarized and/or included in the request for OMB approval of this information collection; they will also become a matter of public record.

Dated: March 31, 1999.

Linda Engelmeier,

Departmental Clearance Officer, Office of the Chief Information Officer.

[FR Doc. 99–8427 Filed 4–5–99; 8:45 am]

BILLING CODE 3510–33–P

DEPARTMENT OF COMMERCE

Bureau of Export Administration

Materials Technical Advisory Committee; Notice of Open Meeting

The Materials Technical Advisory Committee (MTAC) will meet on April 22, 1999, 10:30 a.m., in the Herbert C. Hoover Building, Room 3884, 14th Street between Constitution & Pennsylvania Avenues, N.W., Washington, D.C. The Committee advises the Office of the Assistant Secretary for Export Administration with respect to technical questions that affect the level of export controls applicable to advanced materials and related technology.

Agenda

1. Opening remarks.
2. Discussion of the effect on industry of adding controls for salts, esters, and

hydrates of the 54 chemical precursors already controlled by ECCN 1C350.

3. Report on the status of the Chemical Weapons Convention implementing legislation.

4. Report on the results of the most recent Biological Weapons Convention (BWC) Western Group meeting.

5. Discussion of the BWC implementation protocol, including ''triggers''.

6. Update on deemed export controls.

7. Presentations of papers and comments by the public.

The meeting will be open to the public and a limited number of seats will be available. Reservations are not required. To the extent that time permits, members of the public may present oral statements to the Committee. Written statements may be submitted at any time before or after the meeting. However, to facilitate distribution of public presentation materials to Committee members, the Committee suggests that presenters forward the public presentation materials to the following address: Ms. Lee Ann Carpenter, Advisory Committees MS: 3876, 14th St. & Pennsylvania Ave., N.W., U.S. Department of Commerce, Washington, D.C. 20230.

For more information contact Lee Ann Carpenter on (202) 482–2583.

Dated: March 31, 1999.

Lee Ann Carpenter,

Committee Liaison Officer.

[FR Doc. 99–8361 Filed 4–5–99; 8:45 am]

BILLING CODE 3510–33–M

DEPARTMENT OF COMMERCE

Foreign-Trade Zones Board

[Docket 13–99]

Foreign-Trade Zone 24—Pittston, Pennsylvania; Application for Subzone Sandvik Saws and Tools, Inc., Throop, Pennsylvania

An application has been submitted to the Foreign-Trade Zones Board (the Board) by the Eastern Distribution Center, Inc., grantee of FTZ 24, requesting special-purpose subzone status for the warehousing and distribution facility of Sandvik Saws and Tools, Inc. (Sandvik), located in Throop, Pennsylvania. The application was submitted pursuant to the provisions of the Foreign-Trade Zones Act, as amended (19 U.S.C. 81a-81u), and the regulations of the Board (15 CFR part 400). It was formally filed on March 25, 1999.

The Sandvik facility (40,500 sq. ft.) is located at 15 Burt Collins Drive in Throop (Lackawanna County), Pennsylvania. The facility (85 employees) is used for the storage and distribution of imported saws and tools (primarily HTS 8201, 8202, 8203, 8204 and 8211, duty rate ranges from duty-free to 9%). The products are distributed throughout the U.S. and Central America.

Zone procedures would exempt Sandvik from Customs duty payments on products that are reexported. On its domestic sales, the company would be able to defer duty payments until merchandise is shipped from the plant. The application indicates that the savings from zone procedures would help improve the plant's competitiveness.

In accordance with the Board's regulations, a member of the FTZ staff has been appointed examiner to investigate the application and report to the Board.

Public comment on the application is invited from interested parties. Submissions (original and 3 copies) shall be addressed to the Board's Executive Secretary at the address below. The closing period for their receipt is June 7, 1999. Rebuttal comments in response to material submitted during the foregoing period may be submitted during the subsequent 15-day period (to June 21, 1999).

A copy of the application and the accompanying exhibits will be available for public inspection at each of the following locations:

U.S. Department of Commerce Export Assistance Center, One Montage Mountain Rd., Suite B, Scranton, Pennsylvania 18507.

Office of the Executive Secretary, Foreign-Trade Zones Board, Room 3716, U.S. Department of Commerce, 14th and Pennsylvania Avenue, N.W., Washington, D.C. 20230

Dated: March 26, 1999.

Dennis Puccinelli,

Acting Executive Secretary.

[FR Doc. 99–8483 Filed 4–5–99; 8:45 am]

BILLING CODE 3510–25–P

DEPARTMENT OF COMMERCE

International Trade Administration

[A–428–602]

Preliminary Results of Antidumping Duty Administrative Review: Brass Sheet and Strip From Germany

AGENCY: Import Administration, International Trade Administration, Department of Commerce.

SUMMARY: In response to a request by the petitioners and the respondent, Wieland-Werke AG, the Department of Commerce is conducting an administrative review of the antidumping duty order on brass sheet and strip from Germany. This review covers one manufacturer and exporter of the subject merchandise, Wieland-Werke AG. The period of review is March 1, 1997, through February 28, 1998.

For the reasons provided in the *Facts Available* section of this notice, we have preliminarily determined Wieland-Werke AG's antidumping rate based on adverse facts available, assigning to this company the highest margin applied to a respondent during any segment of this proceeding. If these preliminary results are adopted in our final results of administrative review, we will instruct the Customs Service to assess antidumping duties based on that margin.

Interested parties are invited to comment on these preliminary results. Parties who submit argument in this proceeding are requested to submit with the argument: (1) a statement of the issue; and (2) a brief summary of the argument.

EFFECTIVE DATE: April 6, 1999.

FOR FURTHER INFORMATION CONTACT: Magd Zalok or Kris Campbell, AD/CVD Enforcement Group I, Office 2, Import Administration, International Trade Administration, U.S. Department of Commerce, 14th Street and Constitution Avenue, N.W., Washington, D.C. 20230; telephone: (202) 482–4162 or (202) 482–3813, respectively.

SUPPLEMENTARY INFORMATION:

Applicable Statute and Regulations

Unless otherwise indicated, all citations to the Tariff Act of 1930, as amended (the Act), are references to the provisions effective January 1, 1995, the effective date of the amendments made to the Act by the Uruguay Round Agreements Act (URAA). In addition, unless otherwise indicated, all citations to the Department of Commerce's (the Department's) regulations are to the regulations provided in 19 CFR Part 351 (1998).

Background

The Department published the antidumping duty order on brass sheet and strip from Germany on March 6, 1987. *See Notice of Antidumping Duty Order; Brass Sheet and Strip From the Federal Republic of Germany,* 52 FR 6997 (March 6, 1987). On March 11, 1998, the Department published a notice of opportunity to request an

administrative review of the antidumping duty order for the 1997/98 review period. *See Notice of Antidumping or Countervailing Duty Order, Finding, or Suspended Investigation; Opportunity to Request Administrative Review*, 62 FR 11868 (March 11, 1998). On March 31, 1998, the petitioners [1] and Wieland-Werke AG (Wieland) requested that the Department conduct an administrative review of the antidumping duty order on brass sheet and strip from Germany for Wieland. We published a notice of initiation of this review on April 24, 1998. *See Notice of Initiation of Antidumping and Countervailing Duty Administrative Reviews and Request for Revocation in Part*, 63 FR 20378 (April 24, 1998). On May 5, 1998, we issued an antidumping questionnaire to Wieland. Wieland withdrew from participation in this review on May 11, 1998. On December 7,1998, we extended the time limit for issuance of the preliminary results by 120 days because it was not practicable to issue these results within the specified time period. *See Postponement of Preliminary Results of Antidumping Duty Administrative Review*, 63 FR 67453 (December 7, 1998).

Scope of the Review

This review covers shipments of brass sheet and strip, other than leaded and tinned, from Germany. The chemical composition of the covered products is currently defined in the Copper Development Association (C.D.A.) 200 Series or the Unified Numbering System (U.N.S.) C2000; this review does not cover products the chemical compositions of which are defined by other C.D.A. or U.N.S. series. In physical dimensions, the products covered by this review have a solid rectangular cross section over 0.006 inches (0.15 millimeters) through 0.188 inches (4.8 millimeters) in finished thickness or gauge, regardless of width. Coiled, wound-on-reels (traverse wound), and cut-to-length products are included. The merchandise is currently classified under *Harmonized Tariff Schedule of the United States* (*HTSUS*) item numbers 7409.21.00 and 7409.29.00. Although the *HTSUS* item numbers are provided for convenience and customs purposes, the Department's written description of the scope of this order remains dispositive.

Facts Available

Section 776(a)(2) of the Act provides that if an interested party withholds information that has been requested by the Department, fails to provide such information in a timely manner or in the form requested, significantly impedes a proceeding under the antidumping statute, or provides information that cannot be verified, the Department shall use facts available in reaching the applicable determination.

In selecting from among the facts otherwise available, section 776(b) of the Act authorizes the Department to use an adverse inference if the Department finds that a party has failed to cooperate by not acting to the best of its ability to comply with requests for information. *See* the Statement of Administrative Action to the URAA at 870 (SAA).

In this case, Wieland informed the Department that it was withdrawing from participation in the review on May 11, 1998. By withdrawing its participation, Wieland impeded the instant review. Therefore, we preliminarily determine that the use of total facts available is appropriate, in accordance with section 776(a)(2) of the Act.

As noted above, in selecting facts otherwise available, pursuant to section 776(b) of the Act, the Department may use an adverse inference if the Department finds that an interested party, such as Wieland in this case, failed to cooperate by not acting to the best of its ability to comply with requests for information. Consistent with Department practice in cases where a respondent fails to cooperate to the best of its ability, and in keeping with section 776(b)(3) of the Act, as adverse facts available we have applied a margin based on the highest margin found either in prior reviews or in the LTFV investigation. *See, e.g., Viscose Rayon Staple Fiber From Finland*, 63 FR 32820, 32822 (June 16, 1998) (final administrative review). In this case, the highest margin from either prior reviews or the less-than-fair-value (LTFV) investigation is 16.18 percent *ad valorem*. This rate was calculated for a respondent in the LTFV investigation.

Section 776(c) of the Act requires the Department to corroborate, to the extent practicable, secondary information used as facts available. Secondary information is described in the SAA (at 870) as ''[i]nformation derived from the petition that gave rise to the investigation or review, the final determination concerning the subject merchandise, or any previous review under section 751 concerning the subject merchandise.''

The SAA further provides that ''corroborate'' means simply that the Department will satisfy itself that the secondary information to be used has probative value. Thus, to corroborate secondary information, to the extent practicable, the Department will examine the reliability and relevance of the information used. However, unlike other types of information, such as input costs or selling expenses, there are no independent sources for calculated dumping margins. The only source for margins is an administrative determination. Thus, in an administrative review, if the Department chooses as total adverse facts available a calculated dumping margin from a prior segment of the proceeding, it is not necessary to question the reliability of the margin from that time period (*i.e.*, the Department can normally be satisfied that the information has probative value and that it has complied with the corroboration requirements of section 776(c) of the Act). *See, e.g., Elemental Sulphur from Canada*, 62 FR 971 (January 7, 1997) (preliminary administrative review) and *Antifriction Bearings (Other Than Tapered Roller Bearings) and Parts Thereof from France, et al.*, 62 FR 2081, 2088 (January 15, 1997) (final administrative review). With respect to the relevance aspect of corroboration, however, the Department will consider information reasonably at its disposal as to whether there are circumstances that would render a margin inappropriate. Where circumstances indicate that the selected margin is not appropriate as adverse facts available, the Department will disregard the margin and determine an appropriate margin. *See, e.g., Fresh Cut Flowers from Mexico; Final Results of Antidumping Duty Administrative Review*, 61 FR 6812, 6814 (February 22, 1996) (where the Department disregarded the highest margin as adverse facts available because the margin was based on another company's uncharacteristic business expense resulting in an unusually high margin). In this review, we are not aware of any circumstances that would render the use of the margin selected for Wieland as inappropriate.

Preliminary Results of the Review

As a result of this review, we preliminarily determine that the following margin exists for the period March 1, 1997, through February 28, 1998:

[1] Hussey Copper Ltd., The Miller Company, Outokumpu American Brass, Revere Copper Products, Inc., International Association of Machinists and Aerospace Workers, International Union, Allied Industrial Workers of America (AFL-CIO), Mechanics Educational Society of America (Local 56) and the United Steel Workers of America (AFL–CIO/CLC).

Producer/Manufacturer/Exporter	Percentage Margin
Wieland	16.18

Any interested party may request a hearing within thirty days of publication. *See* 19 CFR 351.310(c). If requested, a hearing will be held 44 days after the publication of this notice, or the first workday thereafter. Interested parties may submit case briefs within 30 days of the date of publication of this notice. Rebuttal briefs, limited to issues raised in the case briefs, may be filed not later than 37 days after the date of publication. The Department will publish a notice of the final results of this administrative review, which will include the results of its analysis of issues raised in any such written comments, not later than 120 days after the date of publication of this notice.

Assessment Rate

In the event these preliminary results are made final, we intend to assess antidumping duties on Wieland's entries at the same rate as the dumping margin (*i.e.*, 16.18 percent) since the margin is not a current calculated rate for the respondent, but a rate based upon total facts available pursuant to section 776(b) of the Act.

Cash Deposit

The following cash deposit requirements will be effective upon publication of the final results of this administrative review for all shipments of the subject merchandise entered, or withdrawn from warehouse, for consumption on or after the publication date, as provided for by section 751(a)(1) of the Act: (1) the cash deposit rate for Wieland will be the rate established in the final results of this administrative review (no deposit will be required for a zero or *de minimis* margin, *i.e.*, a margin lower than 0.5 percent); (2) for merchandise exported by manufacturers or exporters not covered in these reviews but covered in a previous segment of this proceeding, the cash deposit rate will be the company-specific rate published for the most recent segment; (3) if the exporter is not a firm covered in this review, a prior review, or the original LTFV investigation, but the manufacturer is, the cash deposit rate will be the rate established for the most recent period for the manufacturer of the merchandise; and (4) if neither the exporter nor the manufacturer is a firm covered in these or any prior review, the cash deposit rate will be 7.30 percent, the all others rate established in the LTFV investigation. These deposit requirements, when imposed, shall remain in effect until publication of the final results of the next administrative review.

This notice serves as a preliminary reminder to importers of their responsibility under 19 CFR 351.402 to file a certificate regarding the reimbursement of antidumping duties prior to liquidation of the relevant entries during this review period. Failure to comply with this requirement could result in the Secretary's presumption that reimbursement of antidumping duties occurred and the subsequent assessment of double antidumping duties.

This determination is issued and published in accordance with sections 751(a)(1) and 777(i)(1) of the Act.

Dated: March 31, 1999.

Robert S. LaRussa,

Assistant Secretary for Import Administration.

[FR Doc. 99–8485 Filed 4–5–99; 8:45 am]

BILLING CODE 3510–DS–P

DEPARTMENT OF COMMERCE

International Trade Administration

[A–412–810]

Certain Hot-Rolled Lead and Bismuth Carbon Steel Products from the United Kingdom: Preliminary Results of Antidumping Administrative Review

AGENCY: Import Administration, International Trade Administration, Department of Commerce.

ACTION: Notice of preliminary results of antidumping duty administrative review.

SUMMARY: The Department of Commerce (the Department) is conducting an administrative review of the antidumping duty order on certain hot-rolled lead and bismuth carbon steel products from the United Kingdom in response to requests by respondent, British Steel Engineering Steels Limited (BSES), and petitioners, Ispat Inland Inc. and USS/KOBE Steel Co. This review covers the period March 1, 1997, through February 28, 1998.

We have preliminarily determined that sales have been made below normal value (NV). Interested parties are invited to comment on these preliminary results. If these preliminary results are adopted in our final results of administrative review, we will instruct the Customs Service to assess antidumping duties on all appropriate entries.

EFFECTIVE DATE: April 6, 1999.

FOR FURTHER INFORMATION CONTACT: Rebecca Trainor or Katherine Johnson, Office 5, AD/CVD Enforcement Group II, Import Administration, Room B099, International Trade Administration, U.S. Department of Commerce, 14th Street and Constitution Avenue, N.W., Washington D.C. 20230; telephone (202) 482–4007, or 482–4929, respectively.

Applicable Statute and Regulations

Unless otherwise indicated, all citations to the Tariff Act of 1930, as amended (the Act), are references to the provisions effective January 1, 1995, the effective date of the amendments made to the Act by the Uruguay Round Agreements Act (URAA). In addition, unless otherwise indicated, all citations to the Department's regulations are to the regulations at 19 CFR Part 351 (1998).

SUPPLEMENTARY INFORMATION:

Background

On March 22, 1993, the Department published in the **Federal Register** the antidumping duty order on certain hot-rolled lead and bismuth carbon steel products from the United Kingdom (58 FR 15324).

On March 11, 1998, we published in the **Federal Register** (62 FR 11868) a notice of opportunity to request an administrative review of the antidumping duty order on certain hot-rolled lead and bismuth carbon steel products from the United Kingdom covering the period March 1, 1997, through February 28, 1998.

In accordance with 19 CFR 351.213(b)(1), both BSES and petitioners requested that we conduct this administrative review. We published a notice of initiation of this antidumping duty administrative review on April 24, 1998 (63 FR 20378).

On April 28, 1998, petitioners requested that the Department determine whether antidumping duties have been absorbed by BSES. On January 29, 1999, the Department requested proof that unaffiliated purchasers will ultimately pay the antidumping duties to be assessed on entries during the review period.

The Department is conducting this administrative review in accordance with section 751 of the Act.

Scope of the Review

The products covered by this review are hot-rolled bars and rods of nonalloy or other alloy steel, whether or not descaled, containing by weight 0.03 percent or more of lead or 0.05 percent or more of bismuth, in coils or cut lengths, and in numerous shapes and sizes. Excluded from the scope of this

review are other alloy steels (as defined by the *Harmonized Tariff Schedule of the United States* (HTSUS) Chapter 72, note 1 (f)), except steels classified as other alloy steels by reason of containing by weight 0.4 percent or more of lead, or 0.1 percent or more of bismuth, tellurium, or selenium. Also excluded are semi-finished steels and flat-rolled products. Most of the products covered in this review are provided for under subheadings 7213.20.00.00 and 7214.30.00.00 of the HTSUS. Small quantities of these products may also enter the United States under the following HTSUS subheadings: 7213.31.30.00; 7213.31.60.00; 7213.39.00.30; 7213.39.00.60; 7213.39.00.90; 7213.91.30.00; 7213.91.45.00; 7213.91.60.00; 7213.99.00; 7214.40.00.10, 7214.40.00.30, 7214.40.00.50; 7214.50.00.10; 7214.50.00.30, 7214.50.00.50; 7214.60.00.10; 7214.60.00.30; 7214.60.00.50; 7214.91.00; 7214.99.00; 7228.30.80.00; and 7228.30.80.50. HTSUS subheadings are provided for convenience and Customs purposes. The written description of the scope of this proceeding is dispositive.

Duty Absorption

On April 28, 1998, the petitioners requested that the Department determine whether antidumping duties had been absorbed during the POR. Section 751(a)(4) of the Act provides for the Department, if requested, to determine during an administrative review initiated two or four years after the publication of the order, whether antidumping duties have been absorbed by a foreign producer or exporter, if the subject merchandise is sold in the United States through an affiliated importer. In this case, BSES sold to the United States through an importer that is affiliated within the meaning of section 751(a)(4) of the Act.

Section 351.213(j)(2) of the Department's regulations provides that for transition orders (*i.e.*, orders in effect on January 1, 1995), the Department will conduct duty absorption reviews, if requested, for administrative reviews initiated in 1996 or 1998. Because the order underlying this review was issued prior to January 1, 1995, and this review was initiated in 1998, we will make a duty absorption determination in this segment of the proceeding.

On January 29, 1998, the Department requested proof that unaffiliated purchasers will ultimately pay the antidumping duties to be assessed on entries during the review period. BSES did not respond to the Department's request for information. Based on the record, we cannot conclude that the unaffiliated purchasers in the United States will pay the ultimately assessed duty. Furthermore, we have preliminarily determined that there is a dumping margin on 66 percent of BSES' U.S. sales during the POR. Therefore, we find that antidumping duties have been absorbed by BSES on 66 percent of its U.S. sales.

Fair Value Comparisons

To determine whether sales of the subject merchandise by BSES to the United States were made at less than NV, we compared export price (EP) to the NV, as described in the ''Export Price'' and ''Normal Value'' sections of this notice.

Pursuant to section 777(A)(d)(2), we compared the EPs of individual U.S. transactions to the monthly weighted-average NV of the foreign like product where there were sales made at prices above the cost of production (COP), as discussed in the ''Cost of Production Analysis'' section, below, and were otherwise in the ordinary course of trade.

Product Comparisons

In accordance with section 771(16) of the Act, we considered all products produced by BSES covered by the description in the ''Scope of the Review'' section, above, to be foreign like products for purposes of determining appropriate product comparisons to U.S. sales. We compared U.S. sales to sales made in the home market within the contemporaneous window period, which extends from three months prior to the U.S. sale until two months after the sale. Where there were no sales of identical merchandise in the home market made in the ordinary course of trade to compare to U.S. sales, we compared U.S. sales to the most similar foreign like product made in the ordinary course of trade. In making the product comparisons, we matched foreign like products based on the physical characteristics reported by the respondents in the following order: chemical composition, shape, cut (*i.e.*, coil or cut-to-length), size, and grade.

Consistent with our practice (*see, e.g., Final Results of Antidumping Duty Administrative Review: Cold-Rolled Carbon Steel Flat Products from the Netherlands*, 61 FR 48465, September 13,1996), we compared prime quality models sold in the United States to identical prime quality models sold in the home market. Where no home market sales of identical prime quality models made in the ordinary course of trade existed, we compared the U.S. sales of prime quality models to the most similar prime quality foreign like product made in the ordinary course of trade, based on the characteristics listed above. There were no U.S. sales of second quality models during the POR.

Export Price

We based United States price on EP, as defined in section 772(a) of the Act, because the merchandise was sold directly by the exporter to unaffiliated U.S. purchasers prior to the date of importation and constructed export price was not otherwise indicated by the facts of record. When sales are made prior to importation through an affiliated or unaffiliated U.S. sales agent to an unaffiliated customer in the United States, our practice is to examine several criteria in order to determine whether the sales are EP sales. Those criteria are: (1) whether the merchandise was shipped directly from the manufacturer to the unaffiliated U.S. customer; (2) whether this was the customary commercial channel between the parties involved; and (3) whether the function of the U.S. selling agent was limited to that of a ''processor of sales-related documentation'' and a ''communications link'' with the unaffiliated U.S. buyer. Where all three criteria are met, indicating that the activities of the U.S. selling agent are ancillary to the sale, the Department has determined the sales to be EP sales. *See, e.g., Notice of Final Results of Sales at Less Than Fair Value: Stainless Steel Wire Rod From Italy*, 63 FR 40422, 40424–25, July 29, 1998. In the instant review, the role of BSES' U.S. subsidiary was limited to providing marketing support and referring customer inquiries to the parent company. Thus, the above-referenced criteria have been met, and we have treated all U.S. sales as EP sales.

We calculated EP based on packed, delivered prices to customers in the United States. We made deductions, where applicable, for foreign inland freight, FOB charges in the United Kingdom, ocean freight, marine insurance, U.S. Customs duties, brokerage and handling charges, merchandise processing fees, and U.S. inland freight charges, in accordance with 19 CFR 351.402(a). We also made adjustments for invoice corrections.

Normal Value

In order to determine whether there was a sufficient volume of sales in the home market to serve as a viable basis for calculating NV, the Department compared BSES's volume of home market sales of the foreign like product to its volume of U.S. sales of the subject merchandise, in accordance with

sections 773(a)(1) (B) and (C) of the Act. Because BSES' aggregate volume of home market sales of the foreign like product was greater than five percent of its aggregate volume of U.S. sales of the subject merchandise, we determined that the home market provides a viable basis for calculating NV, in accordance with 19 CFR 351.404(b).

Many of BSES' home market sales were made to affiliated original equipment manufacturers (OEMs). It is the Department's practice, in situations where home market sales are made to affiliated parties, to determine whether it is appropriate to use such sales as the basis of NV by comparing the prices of those sales to the prices of sales to unaffiliated parties, on a model-by-model basis. *See Final Results of Antidumping Duty Administrative Reviews, Partial Termination of Administrative Reviews, and Revocation in Part of Antidumping Duty Orders; Antifriction Bearings (Other Than Tapered Roller Bearings) and Parts Thereof from France, et al.*, 60 FR 10899, 10900, February 28, 1995; and 19 CFR 351.403(c). Because BSES made home market sales to affiliated OEMs during the period of review (POR), we tested these sales to ensure that, on average, the affiliated-party sales were made at arm's length. To conduct this test, we compared the weighted-average gross unit prices of sales to affiliated and unaffiliated customers net of all movement charges, direct selling expenses, invoice corrections, rebates, and packing. As a result of our arm's-length test, we disregarded sales to the affiliated OEM customers in the home market where the prices charged to an affiliated customer were on average less than 99.5 percent of the prices charged to unaffiliated customers. *See Final Results of Antidumping Duty Administrative Review; Certain Welded Carbon Steel Pipes and Tubes From Thailand* 62 FR 53809, 53817, October 16, 1997. We did not require BSES to provide downstream sales by the affiliated OEM customers because these customers further manufactured the subject merchandise into merchandise not covered by the order. BSES also sold through affiliated resellers to unaffiliated customers during the POR. BSES reported these unaffiliated-customer transactions, and we used them in our determination of NV. *See* 19 CFR 351.403(d).

In accordance with section 773(a)(1)(B)(i) of the Act, to the extent practicable, we based NV on sales at the same level of trade (LOT) as the EP sale. If NV was calculated at a different LOT, we made an adjustment, if appropriate and if possible, in accordance with section 773(a)(7) of the Act. (*See* ''Level of Trade'' section below.)

Level of Trade

In accordance with section 773(a)(1)(B) of the Act, to the extent practicable, we determine NV based on sales in the comparison market at the same LOT as the EP transaction. The NV LOT is that of the starting-price sales in the comparison market or, when NV is based on CV, that of the sales from which we derive selling, general and administrative (SG&A) expenses and profit. For EP, the LOT is also the level of the starting-price sale, which is usually from the exporter to an unaffiliated U.S. customer. To determine whether NV sales are at a different LOT than EP sales, we examined stages in the marketing process and selling functions along the chain of distribution between the producer and the unaffiliated customer. If the comparison-market sales are at a different LOT and the difference affects price comparability, as manifested in a pattern of consistent price differences between the sales on which NV is based and comparison-market sales at the LOT of the export transaction, we make an LOT adjustment under section 773(a)(7)(A) of the Act.

While BSES did not claim a LOT adjustment, we have, nonetheless, undertaken an evaluation to determine whether such an adjustment was necessary. In so doing, we examined respondent's distribution systems, including selling functions, classes of customers, and selling expenses. BSES reported two channels of distribution in the home market: (1) sales produced to order and shipped from the mill directly to unaffiliated OEMs (Channel 1 sales); and (2) sales by affiliated resellers to unaffiliated OEMs (Channel 2 sales). In analyzing the information submitted, we found that the two home market channels differ with respect to selling activities. Channel 2 sales involved additional selling activities including: ordering by the reseller for its own account in anticipation of future customer orders; maintenance of inventory; small lot sales; cutting into short lengths; and rebundling into smaller weight bundles. None of these activities are typical of mill direct sales to Channel 1 customers. Further, we found that these channels constitute different stages in the marketing process. Based on this analysis, we find that the two home market channels of distribution comprise two LOTs.

BSES reported EP sales in the U.S. market, which were made to order by BSES, and shipped directly to OEMs in the United States. We found that EP sales involved the same selling functions and therefore were sold at the same marketing stage as BSES' home market Channel 1 sales, described above. Therefore, we have determined that the LOT for all EP sales is the same as Channel 1 in the home market. Accordingly, we have compared the U.S. sales to sales at the same LOT in the home market when possible. If we found no contemporaneous home market Channel 1 sales of the identical or most similar product, we matched the EP sale to home market Channel 2 sales of that product. Because we compared sales at different LOTs in some instances, we examined whether a LOT adjustment was appropriate. Based on our analysis, we determined that there was a pattern of consistent price differences between the Channel 1 and Channel 2 LOTs in the home market. Therefore, when we compared sales at different LOTs, we made an adjustment in accordance with section 773(a)(7)(A) of the Act. (*See* Memorandum to the File from The Team dated March 31, 1999, for further explanation.)

Cost of Production Analysis

Pursuant to section 773(b) of the Act, for this POR, we initiated an investigation of sales at less than the COP. We performed this analysis because, in the final results of the most recent administrative review of BSES, we disregarded BSES' home market sales that were below the COP. *See Final Results of Antidumping Duty Administrative Review; Certain Hot-Rolled Lead and Bismuth Carbon Steel Products From the United Kingdom*, 62 FR 18744, April 17, 1997. Therefore, in accordance with section 773(b)(2)(A)(ii) of the Act, we had reasonable grounds to believe or suspect that BSES made sales at less than the COP during this review period. Before making any NV comparisons, we conducted the COP analysis described below.

A. Calculation of COP

We calculated the COP based on the sum of BSES' cost of materials and fabrication employed in producing the foreign like product, plus amounts for home market general and administrative expenses. We relied on the home market sales and COP information provided by BSES in its questionnaire responses.

B. Test of Home Market Prices

After calculating COP, we tested whether home market sales of hot-rolled lead and bismuth carbon steel were made at prices below the COP within an extended period of time in substantial quantities, and whether such prices permitted recovery of all costs within a

reasonable period of time. We compared the model-specific COP to the reported home market prices less any applicable invoice corrections, movement charges, rebates, direct and indirect selling expenses, and packing costs.

C. Results of COP Test

Pursuant to section 773(b)(2)(C) of the Act, where less than 20 percent of the respondent's sales of a specific model were at prices less than the COP, we did not disregard any below-cost sales of that product because we determined that the below-cost sales were not made in ''substantial quantities.'' Where 20 percent or more of the respondent's sales of a specific model during the POR were at prices less than the COP, we disregarded the below-cost sales because we determined that the below-cost sales were made within an extended period of time in ''substantial quantities'' in accordance with sections 773(b)(2)(B) and (C) of the Act, and because, based on our comparisons of prices to weighted-average COPs for the POR, we determined that the below-cost sales of the product were at prices which would not permit recovery of all costs within a reasonable period of time, as defined in section 773(b)(2)(D) of the Act. Based on this test, we disregarded certain below-cost home market sales made by BSES.

Price-to-Price Comparisons

Pursuant to section 777A(d)(2) of the Act, we compared the EPs of individual transactions to the monthly weighted-average price of sales of the foreign like product where there were sales at prices above COP, as discussed above. We based NV on packed, delivered prices to unaffiliated purchasers in the home market, and to affiliated purchasers in the home market to the extent that prices were at arm's length. We made adjustments to home market price, where applicable, in accordance with section 773(a)(6) of the Act, for invoice corrections, rebates, and inland freight. We also made a circumstance-of-sale adjustment for differences in credit, credit insurance and warranty expenses pursuant to section 773(a)(6)(C)(iii) of the Act. In order to adjust for differences in packing between the two markets, we increased home market price by the amount of U.S. packing costs and reduced it by the amount of home market packing costs. We made adjustments, where appropriate, for physical differences in merchandise, in accordance with section 773(a)(6)(C)(ii) of the Act, and for differences in LOT, in accordance with section 773(a)(7)(A) of the Act.

Preliminary Results of the Review

As a result of our comparison of EP and NV, we preliminarily determine that the following weighted-average dumping margin exists:

Manufacturer/exporter	Period	Margin (percent)
British Steel Engineering Steels Limited (BSES) (formerly United Engineering Steels Limited)	3/1/97–2/28/98	12.55

Parties to the proceeding may request disclosure within five days of the date of publication of this notice. Any interested party may request a hearing within 30 days of publication. Any hearing, if requested, will be held 80 days after the date of publication or the first business day thereafter.

Issues raised in the hearing will be limited to those raised in the respective case briefs and rebuttal briefs. Case briefs from interested parties and rebuttal briefs, limited to the issues raised in the respective case briefs, may be submitted not later than 70 days and 77 days, respectively, from the date of publication of these preliminary results. *See* 19 CFR 351.309(c) and (d). Parties who submit case briefs or rebuttal briefs in this proceeding are requested to submit with each argument (1) a statement of the issue and (2) a brief summary of the argument. Parties are also encouraged to provide a summary of the arguments not to exceed five pages and a table of statutes, regulations and cases cited.

The Department will subsequently issue the final results of this administrative review, including the results of its analysis of issues raised in any such written briefs or at the hearing, if held, not later than 120 days after the date of publication of this notice.

Interested parties who wish to request a hearing or to participate if one is requested, must submit a written request to the Assistant Secretary for Import Administration, Room B–099, within 30 days of the date of publication of this notice. Requests should contain: (1) the party's name, address and telephone number; (2) the number of participants; and (3) a list of issues to be discussed. *See* 19 CFR 351.310(c).

Assessment Rates

The Department shall determine, and the Customs Service shall assess, antidumping duties on all appropriate entries. The Department will issue appropriate appraisement instructions directly to the Customs Service upon completion of this review. The final results of this review shall be the basis for the assessment of antidumping duties on entries of merchandise covered by this review and for future deposits of estimated duties. We will instruct the Customs Service to assess antidumping duties on all appropriate entries covered by this review if any importer-specific assessment rate calculated in the final results of this review is above *de minimis.* For assessment purposes, we intend to calculate importer-specific assessment rates for the subject merchandise by aggregating the dumping margins calculated for all U.S. sales examined and dividing this amount by the total quantity sold.

This notice serves as a preliminary reminder to importers of their responsibility under 19 CFR 351.402(f) to file a certificate regarding the reimbursement of antidumping duties prior to liquidation of the relevant entries during this review period. Failure to comply with this requirement could result in the Secretary's presumption that reimbursement of antidumping duties occurred and the subsequent assessment of double antidumping duties.

Cash Deposit Requirements

The following cash deposit requirements will be effective for all shipments of the subject merchandise entered, or withdrawn from warehouse, for consumption on or after the publication date of the final results of this administrative review, as provided by section 751(a)(1) of the Act: (1) The cash deposit rate for the reviewed company will be that established in the final results of this review, except if the rate is less than 0.50 percent, and therefore, *de minimis* within the meaning of 351.106(d)(1), in which case the cash deposit rate will be zero; (2) for previously reviewed or investigated companies not listed above, the cash deposit rate will continue to be the company-specific rate published for the most recent period; (3) if the exporter is not a firm covered in this review, a prior review, or the original less than fair value (LTFV) investigation, but the manufacturer is, the cash deposit rate

will be the rate established for the most recent period for the manufacturer of the merchandise; and (4) the cash deposit rate for all other manufacturers or exporters will continue to be 25.82 percent, the ''All Others'' rate made effective by the LTFV investigation. These requirements, when imposed, shall remain in effect until publication of the final results of the next administrative review.

This administrative review and notice are published in accordance with section 751(a)(1) of the Act and 19 CFR 351.221.

Dated: March 31, 1999.

Robert S. LaRussa,

Assistant Secretary for Import Administration.

[FR Doc. 99–8486 Filed 4–5–99; 8:45 am]

BILLING CODE 3510–DS–P

DEPARTMENT OF COMMERCE

International Trade Administration

[A–428–811]

Certain Hot-Rolled Lead and Bismuth Carbon Steel Products from Germany: Preliminary Results of Antidumping Administrative Review

AGENCY: Import Administration, International Trade Administration, Department of Commerce

ACTION: Notice of preliminary results of antidumping duty administrative review.

SUMMARY: The Department of Commerce (''the Department'') is conducting an administrative review of the antidumping duty order on certain hot-rolled lead and bismuth carbon steel products from Germany in response to a request by the respondent, Saarstahl AG (''Saarstahl''). This review covers the period March 1, 1997, through February 28, 1998.

We have preliminarily determined that sales have not been made below normal value (''NV''). Interested parties are invited to comment on these preliminary results. If these preliminary results are adopted in our final results of administrative review, we will instruct the Customs Service not to assess antidumping duties on entries subject to this review.

EFFECTIVE DATE: April 6, 1999.

FOR FURTHER INFORMATION CONTACT: David J. Goldberger or Rebecca Trainor, Office 5, AD/CVD Enforcement Group II, Import Administration, Room B099, International Trade Administration, U.S. Department of Commerce, 14th Street and Constitution Avenue, N.W., Washington D.C. 20230; telephone (202) 482–4136, or 482–4007, respectively.

Applicable Statute and Regulations

Unless otherwise indicated, all citations to the Tariff Act of 1930, as amended (the Act), are references to the provisions effective January 1, 1995, the effective date of the amendments made to the Act by the Uruguay Round Agreements Act (URAA). In addition, unless otherwise indicated, all citations to the Department's regulations are to the regulations at 19 CFR Part 351 (1998).

SUPPLEMENTAL INFORMATION:

Background

On March 22, 1993, the Department published in the **Federal Register** the antidumping duty order on certain hot-rolled lead and bismuth carbon steel products from Germany (58 FR 15324).

On March 11, 1998, we published in the **Federal Register** (62 FR 11868) a notice of opportunity to request an administrative review of the antidumping duty order on certain hot-rolled lead and bismuth carbon steel products from Germany covering the period March 1, 1997, through February 28, 1998.

In accordance with 19 CFR 351.213(b)(1), Saarstahl requested that we conduct an administrative review of its sales. We published a notice of initiation of this antidumping duty administrative review on April 24, 1998 (63 FR 20378).

On April 28, 1998, petitioners requested that the Department determine whether antidumping duties have been absorbed by Saarstahl. On January 29, 1999, the Department requested proof that unaffiliated purchasers will ultimately pay the antidumping duties to be assessed on entries during the review period.

The Department is conducting this administrative review in accordance with section 751 of the Act.

Scope of the Review

The products covered by this review are hot-rolled bars and rods of nonalloy or other alloy steel, whether or not descaled, containing by weight 0.03 percent or more of lead or 0.05 percent or more of bismuth, in coils or cut lengths, and in numerous shapes and sizes. Excluded from the scope of this review are other alloy steels (as defined by the *Harmonized Tariff Schedule of the United States* (HTSUS) Chapter 72, note 1 (f)), except steels classified as other alloy steels by reason of containing by weight 0.4 percent or more of lead, or 0.1 percent or more of bismuth, tellurium, or selenium. Also excluded are semi-finished steels and flat-rolled products. Most of the products covered in this review are provided for under subheadings 7213.20.00.00 and 7214.30.00.00 of the HTSUS. Small quantities of these products may also enter the United States under the following HTSUS subheadings: 7213.31.30.00; 7213.31.60.00; 7213.39.00.30; 7213.39.00.60; 7213.39.00.90; 7213.91.30.00; 7213.91.45.00; 7213.91.60.00; 7213.99.00; 7214.40.00.10, 7214.40.00.30, 7214.40.00.50; 7214.50.00.10; 7214.50.00.30, 7214.50.00.50; 7214.60.00.10; 7214.60.00.30; 7214.60.00.50; 7214.91.00; 7214.99.00; 7228.30.80.00; and 7228.30.80.50. HTSUS subheadings are provided for convenience and Customs purposes. The written description of the scope of this proceeding is dispositive.

Duty Absorption

On April 28, 1998, the petitioners requested that the Department determine whether antidumping duties had been absorbed during the POR. Section 751(a)(4) of the Act provides for the Department, if requested, to determine during an administrative review initiated two or four years after the publication of the order, whether antidumping duties have been absorbed by a foreign producer or exporter, if the subject merchandise is sold in the United States through an affiliated importer. In this case, Saarstahl sold to the United States through an importer that is affiliated within the meaning of section 751(a)(4) of the Act.

Section 351.213(j)(2) of the Department's regulations provides that for transition orders (*i.e.*, orders in effect on January 1, 1995), the Department will conduct duty absorption reviews, if requested, for administrative reviews initiated in 1996 or 1998. Because the order underlying this review was issued prior to January 1, 1995, and this review was initiated in 1998, we will make a duty absorption determination in this segment of the proceeding. As we have preliminarily found that there is no dumping margin for Saarstahl with respect to its U.S. sales, we have also preliminarily found that there is no duty absorption.

Fair Value Comparisons

To determine whether sales of the subject merchandise by Saarstahl to the United States were made at less than NV, we compared export price (''EP'') to the NV, as described in the ''Export Price'' and ''Normal Value'' sections of this notice.

Pursuant to section 777A(d)(2) of the Act, we compared the EPs of individual U.S. transactions to the monthly weighted-average NV of the foreign like product where there were sales made at prices above the cost of production (COP), as discussed in the ''Cost of Production Analysis'' section, below and were otherwise in the ordinary course of trade.

Product Comparisons

In accordance with section 771(16) of the Act, we considered all products produced by Saarstahl covered by the description in the ''Scope of the Review'' section, above, to be foreign like products for purposes of determining appropriate product comparisons to U.S. sales. We compared U.S. sales to sales made in the home market within the contemporaneous window period, which extends from three months prior to the U.S. sale until two months after the sale. Where there were no sales of identical merchandise in the home market made in the ordinary course of trade to compare to U.S. sales, we compared U.S. sales to the most similar foreign like product made in the ordinary course of trade. In making the product comparisons, we matched foreign like products based on the physical characteristics reported by the respondents in the following order: chemical composition, shape, cut (*i.e.,* coil or cut-to-length), size, and grade (*see* Model Match Methodology Memorandum from the Team to Irene Darzenta Tzafolias, dated March 22, 1999 (''Model Match Methodology Memorandum'')).

Consistent with our practice (*see, e.g., Final Results of Antidumping Duty Administrative Review: Cold-Rolled Carbon Steel Flat Products from the Netherlands,* 61 FR 48465, (September 13, 1996)), we compared prime quality models sold in the United States to identical prime quality models sold in the home market. Where no home market sales of identical prime quality models made in the ordinary course of trade existed, we compared the U.S. sales of prime quality models to the most similar prime quality foreign like product made in the ordinary course of trade, based on the product characteristics listed above. There were no U.S. sales of second quality models during the POR.

The petitioners contend that the Department should also include casting type (*i.e.,* bloom or billet casting) as a product matching characteristic. When selecting model match criteria, we normally choose physical characteristics of the merchandise that are identifiable and/or quantifiable (*see, e.g., Notice of Preliminary Determination of Sales at Less Than Fair Value and Postponement of Final Determination: Melamine Institutional Dinnerware Products From Indonesia,* 61 FR 43333, 43334, August 22, 1996). As discussed in the Model Match Methodology Memorandum, we did not use this production method characteristic in the model match hierarchy because, other than the petitioners' general contention that bloom-cast products are of better quality than billet-cast products, there is no information on the record indicating that merchandise produced by different casting methods results in any discrete, quantifiable differences in the physical characteristics of the merchandise. In addition, while the petitioners have demonstrated a difference in costs between the two production methods, no party has demonstrated that there are differences in cost attributable to differences in physical characteristics of the merchandise.

Because Saarstahl reported product costs and control numbers to distinguish between casting type, we have revised the weight-averaged costs of the products reported based solely on the matching criteria identified above.

Export Price

We based United States price on EP, as defined in section 772(a) of the Act, because the merchandise was sold directly by the exporter to unaffiliated U.S. purchasers prior to the date of importation and constructed export price was not otherwise indicated by the facts of record. When sales are made prior to importation through an affiliated or unaffiliated U.S. sales agent to an unaffiliated customer in the United States, our practice is to examine several criteria in order to determine whether the sales are EP sales. Those criteria are: (1) Whether the merchandise was shipped directly from the manufacturer to the unaffiliated U.S. customer; (2) whether this was the customary commercial channel between the parties involved; and (3) whether the function of the U.S. selling agent was limited to that of a ''processor of sales-related documentation'' and a ''communications link'' with the unaffiliated U.S. buyer. Where all three criteria are met, indicating that the activities of the U.S. selling agent are ancillary to the sale, the Department has determined the sales to be EP sales (*see, e.g., Notice of Final Results of Sales at Less Than Fair Value: Stainless Steel Wire Rod from Italy,* 63 FR 40422, 40424–25, July 29,1998). In the instant review, the above-referenced criteria have been met. As discussed in Saarstahl's questionnaire responses, Saarsteel, Inc., Saarstahl's affiliate in the United States, acts only as a communications link and a processor of sales-related documentation. It has no role in selling the merchandise and it does not inventory the subject merchandise. Accordingly, we have treated all U.S. sales as EP sales.

We calculated EP based on packed, delivered prices to customers in the United States. We made deductions, where applicable, for foreign inland freight and brokerage and handling expenses in Germany, ocean freight, marine insurance, U.S. Customs duties, brokerage and handling charges, merchandise processing fees, and U.S. inland freight charges, in accordance with section 772(c) of the Act.

Normal Value

In order to determine whether there was a sufficient volume of sales in the home market to serve as a viable basis for calculating NV, the Department compared Saarstahl's volume of home market sales of the foreign like product to its volume of U.S. sales of the subject merchandise, in accordance with sections 773(a)(1)(C) of the Act. Because Saarstahl's aggregate volume of home market sales of the foreign like product was greater than five percent of its aggregate volume of U.S. sales of the subject merchandise, we determined that the home market provides a viable basis for calculating NV, in accordance with Section 773(a)(1)(C) of the Act and 19 CFR 351.404(b).

Saarstahl's home market sales listing included merchandise of steel grades that Saarstahl stated are outside the scope of this review. Based on Saarstahl's representations of the merchandise in its December 28, 1998, and January 29, 1999, submissions, we excluded these sales from our analysis.

Many of Saarstahl's home market sales were made to affiliated parties. It is the Department's practice, in situations where home market sales are made to affiliated parties, to determine whether sales to affiliated parties might be appropriate to use as the basis of NV by comparing prices of those sales to prices of sales to unaffiliated parties, on a model-by-model basis. *See Final Results of Antidumping Duty Administrative Reviews, Partial Termination of Administrative Reviews, and Revocation in Part of Antidumping Duty Orders; Antifriction Bearings (Other Than Tapered Roller Bearings) and Parts Thereof From France, et al.,* 60 FR 10899, 10900, February 28, 1995; and 19 CFR 351.403(c). Because Saarstahl made home market sales to affiliated end-users during the POR, we tested these sales to ensure that, on

average, the affiliated-party sales were made at arm's length. To conduct this test, we compared the weighted-average unit prices of sales to affiliated and unaffiliated customers net of all movement charges, direct selling expenses, billing adjustments, and packing. As a result of our arm's-length test, we disregarded sales to the affiliated customers in the home market where the prices charged to an affiliated customer were on average less than 99.5 percent of the prices charged to unaffiliated customers. *See Final Results of Antidumping Duty Administrative Review; Certain Welded Carbon Steel Pipes and Tubes from Thailand,* 62 FR 53808, 53817, October 16, 1997.

In accordance with section 773(a)(1)(B)(i) of the Act, to the extent practicable, we based NV on sales at the same level of trade (''LOT'') as the EP sale.

Level of Trade

In accordance with section 773(a)(1)(B) of the Act, to the extent practicable, we determine NV based on sales in the comparison market at the same LOT as the EP transaction. The NV LOT is that of the starting-price sales in the comparison market or, when NV is based on CV, that of the sales from which we derive selling, general and administrative (''SG&A'') expenses and profit. For EP, the LOT is also the level of the starting-price sale, which is usually from exporter to importer. To determine whether NV sales are at a different level of trade than EP, we examined stages in the marketing process and selling functions along the chain of distribution between the producer and the unaffiliated customer. If the comparison-market sales are at a different LOT and the difference affects price comparability, as manifested in a pattern of consistent price differences between the sales on which NV is based and comparison-market sales at the LOT of the export transaction, we make an LOT adjustment under section 773(a)(7)(A) of the Act.

In this proceeding, Saarstahl reported three channels of distribution in the home market: (1) sales produced to order and shipped directly to the customer, (2) sales manufactured to order and maintained in a warehouse for ''just in time'' delivery, and (3) sales of secondary merchandise sold to resellers. In analyzing the data submitted, we found that the three home market channels differ significantly with respect to selling activities. Inventory maintenance is only offered to customers in the second channel. Freight and delivery services and technical advice are only offered to customers in the first and second channels. Further, we found that these channels constitute different stages in the marketing process. Based on this analysis, we find that the three home market channels of distribution comprise three LOTs.

In the United States, Saarstahl reported one channel of distribution, which involves sales produced to order and shipped directly to customers. The selling activities and functions associated with these sales are equivalent to those offered in the first home market channel discussed above. Accordingly, we have compared the U.S. sales to sales made at the same LOT in the home market.

Cost of Production Analysis

Pursuant to section 773(b) of the Act, for this POR, we initiated an investigation of sales at less than the cost of production (''COP''). As discussed in the Memorandum to Joe Spetrini, Deputy Assistant Secretary for AD/CVD Enforcement III from Edward Yang, Office Director, dated July 8, 1998, we initiated the COP investigation because, in the preliminary determination of the less-than-fair-value (''LTFV'') investigation, we disregarded some of Saarstahl's home market sales found to be below the COP (*see Preliminary Determination of Sales at Less Than Fair Value: Certain Hot-Rolled Lead and Bismuth Carbon Steel Products From Germany,* 57 FR 44551, September 28, 1992). Saarstahl subsequently failed both the sales and COP verifications and the Department relied on the best information available as the basis for the final determination (*see Final Determination of Sales at Less Than Fair Value: Certain Hot-Rolled Lead and Bismuth Carbon Steel Products From Germany,* 58 FR 6205, January 27, 1993). Therefore, in accordance with section 773(b)(2)(A)(ii) of the Act, we had reasonable grounds to believe or suspect that sales made at less than the COP may have occurred during this review period. Before making any NV comparisons, we conducted the COP analysis described below.

A. Calculation of COP

We calculated the COP based on the sum of Saarstahl's cost of materials and fabrication employed in producing the foreign like product, plus amounts for home market general and administrative (G&A) expenses and interest expenses. We made no adjustments to the data provided by Saarstahl in its questionnaire responses.

B. Test of Home Market Prices

After calculating COP, we tested whether home market sales of hot-rolled lead and bismuth carbon steel were made at prices below the COP within an extended period of time in substantial quantities, and whether such prices permitted recovery of all costs within a reasonable period of time. We compared the model-specific COP to the reported home market prices less any applicable movement charges, billing adjustments, direct and indirect selling expenses, and packing.

For indirect selling expenses incurred in Germany, Saarstahl reported the actual expenses incurred during the POR by its affiliate Vertriebsgesellschaft Saarstahl m.b.H. (''VGS''), which handles all of Saarstahl's sales and distribution activities. Since the COP response is based on Saarstahl's expenses during its fiscal year, corresponding to the calendar year, we recalculated the indirect selling expenses to reflect the fiscal year, based on the ratio of VGS' expenses to sales revenue reported in its 1997 financial statement, which covers the 1997 calendar year. These expenses included commission payments to unaffiliated parties. To avoid double-counting, we did not deduct these commissions from the net home market price we compared to COP.

C. Results of COP Test

Pursuant to section 773(b)(2)(C) of the Act, where less than 20 percent of the respondent's sales of a specific model were at prices less than the COP, we did not disregard any below-cost sales of that product because we determined that the below-cost sales were not made in ''substantial quantities.'' Where 20 percent or more of the respondent's sales of a specific model during the POR were at prices less than the COP, we disregarded the below-cost sales because we determined that the below-cost sales were made within an extended period of time in ''substantial quantities'' in accordance with sections 773(b)(2)(B) and (C) of the Act, and because, based on our comparisons of prices to weighted-average COPs for the POR, we determined that the below-cost sales of the product were at prices which would not permit recovery of all costs within a reasonable period of time, as defined in section 773(b)(2)(D) of the Act. Based on this test, we disregarded certain below-cost home market sales made by Saarstahl.

Price-to-Price Comparisons

Pursuant to section 777A(d)(2) of the Act, we compared the EPs of individual

transactions to the monthly weighted-average price of sales of the foreign like product where there were sales at prices above COP, as discussed above. We based NV on packed, delivered prices to unaffiliated purchasers in the home market, and to affiliated purchasers in the home market to the extent that prices were at arm's-length. We made adjustments to home market price, where applicable, in accordance with section 773(a)(6) of the Act, for billing adjustments, inland freight, and warehousing expenses. We also made circumstance-of-sale adjustments for differences in credit expenses, interest revenue, bank fees (based on information in Saarstahl's February 26, 1999, response), warranties, and commissions paid to unaffiliated parties pursuant to section 773(a)(6)(C)(iii) of the Act.

Saarstahl paid commissions to unaffiliated parties on certain sales in the home market, but did not pay any commissions to unaffiliated parties on U.S. sales. Under 19 CFR 351.410 (e), where there is a commission paid in one market and none in the other market, we offset the commission with indirect selling expenses incurred in the other market to the extent of the lesser of the commission or the indirect selling expenses. Accordingly, where appropriate, we offset the weighted-average home market commission by deducting it from the weighted-average home market price and then adding the sale-specific U.S. indirect selling expenses. For U.S. indirect selling expenses, we used the recalculated indirect selling expenses incurred in Germany, as described in the ''Cost of Production Analysis'' section above. In addition, we calculated the selling expenses incurred by Saarstahl's U.S. affiliate, Saarsteel, Inc., based on the ratio of Saarsteel's selling expenses to sales revenue reported in its 1997 financial statement. We also included the reported inventory carrying expense amount on U.S. sales in the total amount of U.S. indirect selling expenses available to offset the weighted-average home market commissions.

In order to adjust for differences in packing between the two markets, we increased home market price by the amount of U.S. packing costs and reduced it by the amount of home market packing costs. We made adjustments, where appropriate, for physical differences in merchandise, in accordance with section 773(a)(6)(C)(ii) of the Act.

For home market sales where the payment date was not reported as of the date of submission of the latest home market sales listing, we recalculated imputed credit expenses using the date of the latest sales listing submission as the payment date.

Preliminary Results of the Review

As a result of our comparison of EP and NV, we preliminarily determine that the following weighted-average dumping margin exists:

Manufacturer/Exporter	Period	Margin (percent)
Saarstahl AG (Saarstahl)	3/1/97–2/28/98	0.00

Parties to the proceeding may request disclosure within five days of the date of publication of this notice. Any interested party may request a hearing within 30 days of publication. Any hearing, if requested, will be held 80 days after the date of publication or the first business day thereafter.

Issues raised in the hearing will be limited to those raised in the respective case briefs and rebuttal briefs. Case briefs from interested parties and rebuttal briefs, limited to the issues raised in the respective case briefs, may be submitted not later than 70 days and 77 days, respectively, from the date of publication of these preliminary results. *See* 19 CFR 351.309(c) and (d). Parties who submit case briefs or rebuttal briefs in this proceeding are requested to submit with each argument (1) a statement of the issue and (2) a brief summary of the argument. Parties are also encouraged to provide a summary of the arguments not to exceed five pages and a table of statutes, regulations, and cases cited.

The Department will subsequently issue the final results of this administrative review, including the results of its analysis of issues raised in any such written briefs or at the hearing, if held, not later than 120 days after the date of publication of this notice.

Interested parties who wish to request a hearing or to participate if one is requested, must submit a written request to the Assistant Secretary for Import Administration, Room B–099, within 30 days of the date of publication of this notice. Requests should contain: (1) the party's name, address and telephone number; (2) the number of participants; and (3) a list of issues to be discussed. See 19 CFR 351.310(c).

Assessment Rates

The Department shall determine and the Customs Service shall assess antidumping duties on all appropriate entries. The Department will issue appropriate appraisement instructions directly to the Customs Service upon completion of this review. The final results of this review shall be the basis for the assessment of antidumping duties on entries of merchandise covered by this review and for future deposits of estimated duties. We will instruct the Customs Service to assess antidumping duties on all appropriate entries covered by this review if any importer-specific assessment rate calculated in the final results of this review is above *de minimis*. For assessment purposes, we intend to calculate importer-specific assessment rates for the subject merchandise by aggregating the dumping margins calculated for all U.S. sales examined and dividing this amount by the total entered value of the sales examined.

This notice serves as a preliminary reminder to importers of their responsibility under 19 CFR 351.402(f) to file a certificate regarding the reimbursement of antidumping duties prior to liquidation of the relevant entries during this review period. Failure to comply with this requirement could result in the Secretary's presumption that reimbursement of antidumping duties occurred and the subsequent assessment of double antidumping duties.

Cash Deposit Requirements

The following cash deposit requirements will be effective for all shipments of the subject merchandise entered, or withdrawn from warehouse, for consumption on or after the publication date of the final results of this administrative review, as provided by section 751(a)(1) of the Act: (1) The cash deposit rate for the reviewed company will be that established in the final results of this review, except if the rate is less than 0.50 percent, and therefore, *de minimis* within the meaning of 19 CFR 351.106(d)(1), in which case the cash deposit rate will be zero; (2) for previously reviewed or investigated companies not listed above, the cash deposit rate will continue to be the company-specific rate published for the most recent period; (3) if the exporter is not a firm covered in this

review, a prior review, or the original LTFV investigation, but the manufacturer is, the cash deposit rate will be the rate established for the most recent period for the manufacturer of the merchandise; and (4) the cash deposit rate for all other manufactures or exporters will continue to be 85.05 percent, the ''All Others'' rate made effective by the LTFV investigation. These requirements, when imposed, shall remain in effect until publication of the final results of the next administrative review.

This administrative review and notice are published in accordance with section 751(a)(1) of the Act and 19 CFR 351.221.

Dated: March 31, 1999.

Robert S. LaRussa,

Assistant Secretary for Import Administration.

[FR Doc. 99–8487 Filed 4–5–99; 8:45 am]

BILLING CODE 3510–DS–P

DEPARTMENT OF COMMERCE

International Trade Administration

[A–412–803]

Industrial Nitrocellulose From the United Kingdom: Notice of Extension of Preliminary Results of Antidumping Duty Administrative Review

AGENCY: Import Administration, International Trade Administration, Department of Commerce.

ACTION: Notice of Extension of time limits for preliminary results of antidumping duty administrative review of industrial nitrocellulose from the United Kingdom.

SUMMARY: The Department of Commerce (''the Department'') is extending the time limits for the preliminary results of the antidumping duty administrative review of the antidumping order on industrial nitrocellulose from the United Kingdom. This review covers one producer/exporter of industrial nitrocellulose for the period July 1, 1997, through June 30, 1998.

EFFECTIVE DATE: April 6, 1999.

FOR FURTHER INFORMATION CONTACT: Todd Peterson or Thomas Futtner, AD/CVD Enforcement Group II, Office 4, Import Administration, International Trade Administration, U.S. Department of Commerce, 14th Street and Constitution Avenue, N.W., Washington D.C. 20230, telephone (202) 482–4195 or 482–3814, respectively.

SUPPLEMENTARY INFORMATION:

Applicable Statute and Regulations

Unless otherwise indicated, all citations to the Tariff Act of 1930, as amended (''the Act'') are references to the provisions effective January 1, 1995, the effective date of the amendments made to the Act by the Uruguay Round Agreements Act. In addition, unless otherwise indicated, all citations to the Department's regulations are references to the provisions codified at 19 CFR part 351 (1998).

Extension of Time Limits for Preliminary Results

The Department initiated this administrative review on August 27, 1998 (63 FR 45796). Under section 751(a)(3)(A) of the Act, the Department may extend the deadline for completion of an administrative review if it determines that it is not practicable to complete the review within the statutory time limit. Due to the complexity of a certain issue in this case, the Department determines that it is not practicable to complete the preliminary results of this review within the statutory time limit. *See* memorandum from Holly A. Kuga to Robert S. LaRussa, which is on file in Room B–099 at the Department's headquarters. Therefore, the Department is extending the time limit for the preliminary results of the aforementioned review to July 31, 1999. The final determination will occur within 120 days of the publication of the preliminary results.

This extension of time limits is in accordance with section 751(a)(3)(A) of the Act.

Dated: March 30, 1999.

Louis Apple,

Acting Deputy Assistant Secretary, AD/CVD Enforcement Group II.

[FR Doc. 99–8484 Filed 4–5–99; 8:45 am]

BILLING CODE 3510–DS–P

DEPARTMENT OF COMMERCE

National Oceanic and Atmospheric Administration

[I.D. 032999B]

North Pacific Fishery Management Council; Notice of Meetings

AGENCY: National Marine Fisheries Service (NMFS), National Oceanic and Atmospheric Administration (NOAA), Commerce.

ACTION: The North Pacific Fishery Management Council and its advisory committees will hold public meetings.

SUMMARY: The North Pacific Fishery Management Council (Council) and its advisory committees will meet in Anchorage, AK.

DATES: See **SUPPLEMENTARY INFORMATION** for specific dates and times for the meetings.

ADDRESSES: The meetings will be held at the Anchorage Hilton Hotel, 500 W. Third Avenue, Anchorage, AK.

Council address: North Pacific Fishery Management Council, 605 W. 4th Ave., Suite 306, Anchorage, AK 99501–2252.

FOR FURTHER INFORMATION CONTACT: Council staff, telephone: 907–271–2809.

SUPPLEMENTARY INFORMATION:

Dates and Times for the Meetings

1. The Scientific and Statistical Committee (SSC) will begin at 9:30 a.m. on Monday, April 19, continuing through Wednesday, April 21, 1999.

2. The Advisory Panel (AP) will begin at 8:00 a.m. on Monday, April 19, and continue through Thursday, April 22, 1999.

3. The Council's Enforcement Committee and Individual Fishery Quota (IFQ) Implementation Team will meet at 6:00 p.m. on Tuesday, April 20, to discuss a proposed weighmaster program for the halibut and sablefish IFQ fisheries.

4. The Council's Enforcement Committee will meet at 6:00 p.m. on Wednesday, April 21, to discuss enforcement issues related to the Federal and State definitions of 'pelagic trawl.'

5. The Council will begin at 8:00 a.m. on Wednesday, April 21, continuing through a portion of Monday, April 26, 1999.

Other workgroup or committee meetings may be held during the week. Notices of these meetings will be posted at the hotel. All meetings are open to the public with the exception of Council executive sessions, which may be held during the noon hour during the meeting week, if necessary, to discuss personnel, international issues, or litigation.

Agendas

Scientific and Statistical Committee (SSC)

The SSC will address the following issues:

1. Reports on Federal and State research activities involving Steller sea lions, and review of an initial analysis of management measures for Steller sea lion protection for the years 2000 and beyond.

2. Initial review of amendments to Council fishery management plans designed to mitigate effects of recent

American Fisheries Act (AFA) measures on non-pollock fisheries, and initial review of amendments to fishery management plans to conform with the AFA.

3. Final review of management measures for seabird protection, and review an experimental fishery permits, if available, for bird avoidance measures.

4. Review of logbook data collection for the halibut charter fisheries off Alaska.

5. Initial review of fishery management plan amendments:

a. A non-pelagic trawl ban in Cook Inlet.

b. Initial review of alternatives for shark management.

6. Initial review of a proposed rebuilding plan for *C. bairdi* crab in the Bering Sea.

Advisory Panel

The agenda for the Advisory Panel will include the same subjects as listed below for the Council's plenary session, with the exception of Halibut Charter Guideline Harvest Level (Item 2), and Crab LLP Eligibility (Item 6), which they considered at their February 1999 meeting, and Magnuson-Stevens Act Reauthorization (Item 10), the NMFS Budget (Item 12), and the status reports listed in Item 1.

Council

The agenda for the Council's plenary session will include the following issues. The Council may take appropriate action on any of the issues identified.

1. The Council will receive the following reports, taking action if required:

a. Reports from the National Marine Fisheries Service (NMFS) and the Alaska Department of Fish and Game (ADF&G) on the current status of the groundfish fisheries off Alaska.

b. Reports from the U.S. Coast Guard and NMFS Enforcement on recent enforcement activities.

c. Report from the National Research Council on a recent ecosystems management study.

2. The Council will review a discussion paper of proposed management measures for the Alaska halibut charterboat fleet and provide direction to staff.

3. Receive reports on Federal and State research activities relating to Steller sea lions.

4. Initial review of alternatives and options for implementation of additional or alternative Steller sea lion protection measures for 2000 and beyond.

5. Initial review of fishery management plan amendments to conform with requirements of the American Fisheries Act (AFA), and initial review of an amendment package for fishery management measures to mitigate impacts of the AFA on non-pollock fisheries.

6. Consider revision of previous action on eligibility for the license limitation program for the crab fisheries off Alaska.

7. The Council will discuss sustainable fisheries management, and receive a progress report on development of criteria for defining habitat areas of particular concern.

8. The Council is scheduled to take final action on management measures for seabird protection, discuss the problem of net debris, and review experimental fishery permits, if available, for bird avoidance measures.

9. The Council will receive a status report on the national vessel monitoring system.

10. The Council will receive a status report on a proposed weighmaster program for the halibut and sablefish IFQ fisheries and take any necessary action.

11. The Council will hold an initial discussion of potential amendments to the Magnuson-Stevens Fishery Conservation and Management Act.

12. The Council will discuss and comment, if necessary, on a proposed rule to reduce observer coverage on longline catcher vessels 60 ft and under in the Community Development Quota (CDQ) program.

13. The Council will receive a status report on communities eligible under the CDQ program, and review an analysis to reduce CDQ observer coverage at shore plants.

14. The Council will discuss NMFS budget priorities and regional funding allocations within NMFS.

15. Under Groundfish Management, the Council will consider the following subjects:

a. Final action on reduction of the maximum retainable bycatch of shortraker/rougheye and thornyhead rockfish.

b. Initial review of an amendment to ban non-pelagic trawl gear in Cook Inlet.

c. Review of any proposals received for individual vessel bycatch accountability and halibut mortality avoidance programs.

d. Direction to staff on allocation of Bering Sea/Aleutian Islands Pacific cod between freezer longliners and other fixed gear.

e. Initial review of management alternatives for sharks in the waters off Alaska.

f. Discussion and direction to staff on analysis of species endorsements under the groundfish license limitation program.

g. Review experimental fisheries permit to assess sampling for species composition.

16. Initial review of a rebuilding plan for *bairdi* crab in the Bering Sea/Aleutian Islands.

17. Review Board of Fisheries activities concerning crab fishing seasons and new stand-down requirements.

The Council will review and discuss potential impacts of these actions on other Council-managed fisheries and take action as necessary.

Although other issues not contained in this agenda may come before this Council for discussion, in accordance with the Magnuson-Stevens Fishery Conservation and Management Act, those issues may not be the subject of formal Council action during the meeting. Council action will be restricted to those issues specifically identified in the agenda listed in this notice.

Special Accommodations

These meetings are physically accessible to people with disabilities. Requests for sign language interpretation or other auxiliary aids should be directed to Helen Allen, 907–271–2809, at least 7 working days prior to the meeting date.

Dated: March 31, 1999.

Richard W. Surdi,

Acting Director, Office of Sustainable Fisheries, National Marine Fisheries Service.

[FR Doc. 99–8471 Filed 4–5–99; 8:45 am]

BILLING CODE 3510–22–F

DEPARTMENT OF COMMERCE

National Oceanic and Atmospheric Administration

[I.D. 032999C]

Western Pacific Fishery Management Council; Public Meetings

AGENCY: National Marine Fisheries Service (NMFS), National Oceanic and Atmospheric Administration (NOAA), Commerce.

ACTION: Notice of public meetings.

SUMMARY: The Western Pacific Fishery Council (Council) will hold public meetings of its Bottomfish Advisory Panel (BAP) and Bottomfish Plan Team (BPT) in Honolulu, HI.

DATES: The BAP meeting will be held on April 21–22, 1999, from 8:30 a.m. to

5:00 p.m. each day. The BPT meeting will be held on April 28–29, 1999, from 8:30 a.m. to 5:00 p.m. each day.

ADDRESSES: Both meetings will be held at the Council office conference room, 1164 Bishop St., Suite 1400, Honolulu, HI; telephone: (808–522–8220).

Council address: Western Pacific Fishery Management Council, 1164 Bishop St., Suite 1400, Honolulu, HI 96813.

FOR FURTHER INFORMATION CONTACT: Kitty M. Simonds, Executive Director; telephone: 808–522–8220.

SUPPLEMENTARY INFORMATION: The BAP will discuss and may make recommendations to the Council on the agenda items below. The order in which agenda items will be addressed can change.

8:30 am Wednesday, April 21, 1999

1. Status of Northwestern Hawaiian Island (NWHI) and Main Hawaiian Islands (MHI) bottomfish management systems

A. Genetic research on onaga, ehu & hapuupuu stocks

B. Status of State's MHI management program (including enforcement and adequacy of closed areas)

2. Other concerns from the Region

A. Possible limited entry/closed areas in Northern Mariana Islands

B. Night scuba spear fishing in Guam

C. Other areas

3. Status of annual report recommendations (American Samoa, Guam, Hawaii, Northern Mariana Islands, Region-wide)

8:30 a.m. Thursday, April 22, 1999

4. Status of amendment addressing Sustainable Fishery Act (SFA) provisions

5. Council's Program Planning document

6. Comprehensive Data Amendment

7. Other business

8. Summary of Panel's recommendations

The BPT will discuss and may make recommendations to the Council on the agenda items below. The order in which agenda items will be addressed can change.

8:30 a.m. Wednesday, April 28, 1999

1. Improvements to annual report modules

A. Progress with previous recommendations

B. Suggestions for further improvements

2. 1998 annual report modules (status of fishery and area recommendations; American Samoa, Guam, Hawaii, Northern Mariana Islands)

3. 1998 annual report region-wide recommendations

A. Progress/status of previous year's recommendations

B. Development of new or repeat recommendations

8:30 a.m. Thursday, April 29, 1999

4. Status of amendment addressing SFA provisions

A. Bycatch

B. Overfishing

5. Addition of Bottomfish Management Unit Species (BMUS)

6. Status of NWHI bottomfish management system

A. Mau Zone limited entry amendment

7. MHI bottomfish management

A. Genetic stock structure of onaga & ehu

B. Genetic research needs for hapuupuu

C. Status of State's MHI management program (including enforcement and adequacy of closed areas)

8. Council's Program Planning document

9. Comprehensive Data Amendment

10. Recommendations of the Bottomfish Advisory Panel

11. Other business, and

12. Summary of Plan Team recommendations.

Although other issues not contained in this agenda may come before the Council for discussion, in accordance with the Magnuson-Stevens Fishery Conservation and Management Act, those issues may not be the subject of formal action during this meeting. Action will be restricted to those issues specifically listed in this notice.

Special Accommodations

This meeting is physically accessible to people with disabilities. Requests for sign language interpretation or other auxiliary aids should be directed to Kitty M. Simonds, 808–522–8220 (voice) or 808–522–8226 (fax), at least 5 days prior to meeting date.

Dated: March 30, 1999.

Bruce C. Morehead,

Acting Director, Office of Sustainable Fisheries, National Marine Fisheries Service.

[FR Doc. 99–8469 Filed 4–5–99; 8:45 am]

BILLING CODE 3510–22–F

DEPARTMENT OF COMMERCE

Patent and Trademark Office

Admittance To Practice and Roster of Registered Patent Attorneys and Agents Admitted To Practice Before the Patent and Trademark Office

ACTION: Proposed collection; comment request.

SUMMARY: The Department of Commerce (DOC), as part of its continuing effort to reduce paperwork and respondent burden, invites the general public and other Federal agencies to comment on the continuing and proposed information collection, as required by the Paperwork Reduction Act of 1995, Public Law 104–13 (44 U.S.C. 3506(c)(2)(A)).

DATES: Written comments must be submitted on or June 7, 1999.

ADDRESSES: Direct all written comments to Linda Engelmeier, Departmental Forms Clearance Officer, Department of Commerce, Room 5033, 14th and Constitution Avenue, NW, Washington, DC 20230 (e mail address is LEngelme@doc.gov).

FOR FURTHER INFORMATION CONTACT: Requests for additional information should be directed to the attention of Karen Bovard, Director, Office of Enrollment and Discipline, 2221 South Clark Street, Arlington, VA 22202, by telephone at (703) 306–4097, or by facsimile transmission to (703) 306–4134.

SUPPLEMENTARY INFORMATION:

I. Abstract

The Office of Enrollment and Discipline (OED) collects information to determine the qualifications of individuals entitled to represent applicants before the Patent and Trademark Office (PTO) in the preparation and prosecution of applications for a patent. The OED also collects information to administer and maintain the roster of attorneys and agents registered to practice before the PTO.

There are forms associated with this information collection, which OED uses to collect information from the public. These forms are Form PTO–158 (Application for Registration to Practice Before the United States Patent and Trademark Office), Form PTO–158A (Application for Registration to Practice Before the United States Patent and Trademark Office Under 37 CFR 10.6(c) By a Foreign Resident), Form PTO–275 (Undertaking Under 37 CFR 10.10(b)), and Form PTO–107A (Data Sheet—Register of Patent Attorneys and

Agents). The applicant uses Forms PTO–158, 158A, and 275 to register for the examination. Form PTO–107A is used by the applicant to supply information for the register.

II. Method of collection

By mail, facsimile, and hand carry when the individual desires to participate in the information collection.

III. Data

OMB Number: 0651–0012.

Form Number: Form PTO–158, Form PTO–158A, Form PTO–275, and Form PTO–107A.

Type of Review: Revision of a currently approved collection.

Affected Public: Individuals or households, businesses or other for-profit, not-for-profit institutions, farms, state, local or tribal governments, and the Federal Government.

Estimated Number of Respondents: 8,100 responses per year.

Estimated Time Per Response: It is estimated to take approximately 30 minutes to complete either an application for registration to practice before the PTO or an application for a foreign resident to practice before the PTO. It is estimated to take 20 minutes to complete undertakings under 37 CFR 10.10(b) and data sheets for the register of patent attorneys and agents.

Estimated Total Annual Respondent Burden Hours: 3,557 hours per year.

Estimated Total Annual Respondent Cost Burden: $0 (no capital start-up or maintenance expenditures are required). $622,475 per year is estimated for salary costs associated with respondents.

Title of form	PTO Form Number	Estimated time for response (minutes)	Estimated annual burden hours	Estimated annual responses
Application for Registration to Practice Before the United States Patent and Trademark Office.	Form PTO–158	30	2,500	5,000
Application for Registration to Practice Before the United States Patent and Trademark Office Under 37 CFR 10.6(c) by a Foreign Resident.	Form PTO–158A	30	100	200
Undertaking under 37 CFR 10.10(b)	Form PTO–275	20	132	400
Data Sheet—Register of Patent Attorneys and Agents	Form PTO–107A	20	825	2,500
Totals			3,557	8,100

IV. Request for Comments

Comments are invited on: (a) Whether the proposed collection of information is necessary for the proper performance of the functions of the agency, including whether the information shall have practical utility; (b) the accuracy of the agency's estimate of the burden (including hours and cost) of the proposed collection of information; (c) ways to enhance the quality, utility, and clarity of the information to be collected; and (d) ways to minimize the burden of the collection of information on respondents, e.g., the use of automated collection techniques or other forms of information technology.

Comments submitted in response to this notice will be summarized or included in the request for OMB approval of this information collection; they will also become a matter of public record.

Dated: March 31, 1999.

Linda Engelmeier,

Departmental Forms Clearance Officer, Office of the Chief Information Officer.

[FR Doc. 99–8431, Filed 4–5–99; 8:45 am]

BILLING CODE 3510–16–P

CONSUMER PRODUCT SAFETY COMMISSION

Proposed Collection; Comment Request—Information Collection Requirements for Sound Levels of Toy Caps

AGENCY: Consumer Product Safety Commission.

ACTION: Notice.

SUMMARY: As required by the Paperwork Reduction Act of 1995 (44 U.S.C. Chapter 35), the Consumer Product Safety Commission requests comments on a proposed extension of approval, for a period of three years from the date of approval by the Office of Management and Budget, of information collection requirements in a toy cap rule.

A regulation codified at 16 CFR 1500.18(a)(5) bans toy caps producing peak sound levels at or above 138 decibels (dB). Another regulation codified at 16 CFR 1500.86(a)(6) exempts toy caps producing sound levels between 138 and 158 dB from the banning rule if they bear a specified warning label and if firms intending to distribute such caps: (1) notify the Commission of their intent to distribute such caps; (2) participate in a program to develop toy caps producing sound levels below 138 dB; and (3) report quarterly to the Commission concerning the status of their programs to develop caps with reduced sound levels. The Commission wishes to obtain current and periodically updated information from all manufacturers concerning the status of programs to reduce sound levels of toy caps. The Commission will use this information to monitor industry efforts to reduce the sound levels of toy caps, and to ascertain which firms are currently manufacturing or importing toy caps with peak sound levels between 138 and 158 db.

The Commission will consider all comments received in response to this notice before requesting approval of this collection of information from the Office of Management and Budget.

DATES: Written comments must be received by the Office of the Secretary not later than June 7, 1999.

ADDRESSES: Written comments should be captioned ''Information Collection Requirements for Sound Levels of Toy Caps'' and mailed to the Office of the Secretary, Consumer Product Safety Commission, Washington, D.C. 20207, or delivered to that office, room 502, 4330 East-West Highway, Bethesda, Maryland 20814. Written comments may also be sent to the Office of the Secretary by facsimile at (301) 504–0127 or by e-mail at cpsc-os@cpsc.gov.

FOR FURTHER INFORMATION CONTACT: For information about the proposed collection of information call or write Robert E. Frye, Director, Office of

Planning and Evaluation, Consumer Product Safety Commission, Washington, D.C. 20207; (301) 504–0416, Ext. 2264.

SUPPLEMENTARY INFORMATION:

A. Estimated Burden

The Commission staff estimates that there are ten firms required to annually submit the required information. The staff further estimates that the average number of hours per respondent is four per year, for a total of 40 hours of annual burden.

B. Request for Comments

The Commission solicits written comments from all interested persons about the proposed collection of information. The Commission specifically solicits information relevant to the following topics:

—Whether the collection of information described above is necessary for the proper performance of the Commission's functions, including whether the information would have practical utility;
—Whether the estimated burden of the proposed collection of information is accurate;
—Whether the quality, utility, and clarity of the information to be collected could be enhanced; and
—Whether the burden imposed by the collection of information could be minimized by use of automated, electronic or other technological collection techniques, or other forms of information technology.

Dated: April 1, 1999.

Sadye E. Dunn,

Secretary, Consumer Product Safety Commission.

[FR Doc. 99–8497 Filed 4–5–99; 8:45 am]

BILLING CODE 6355–01–P

CONSUMER PRODUCT SAFETY COMMISSION

Petition Requesting Labeling Rule for Polyurethane Foam in Upholstered Furniture

AGENCY: Consumer Product Safety Commission.

ACTION: Notice.

SUMMARY: The Commission has received a petition from the National Association of State Fire Marshals requesting that the Commission require labels warning that polyurethane foam in upholstered furniture poses a fire hazard under the Flammable Fabrics Act. The Commission solicits written comments concerning the petition.

DATES: Comments on the petition should be received in the Office of the Secretary by June 7, 1999.

ADDRESSES: Comments, preferably in five copies, on the petition should be mailed to the Office of the Secretary, Consumer Product Safety Commission, Washington, DC 20207, telephone (301) 504–0800, or delivered to the Office of the Secretary, Room 501, 4330 East-West Highway, Bethesda, Maryland 20814. Comments may also be filed by telefacsimile to (301) 504–0127 or by email to cpsc-os@cpsc.gov. Comments should be captioned ''Petition FP 99–1, Petition for Labeling of Polyurethane Foam.'' A copy of the petition is available for inspection at the Commission's Public Reading Room, Room 419, 4330 East-West Highway, Bethesda, Maryland.

FOR FURTHER INFORMATION CONTACT: Rockelle Hammond, Office of the Secretary, Consumer Product Safety Commission, Washington, D.C. 20207; telephone (301) 504–0800, ext. 1232.

SUPPLEMENTARY INFORMATION: The Commission has received correspondence from the National Association of State Fire Marshals (''NASFM'') that requests the Commission to issue a rule under the Flammable Fabrics Act (''FFA'').[1] NASFM asserts that polyurethane foam in upholstered furniture poses an unreasonable risk of fire because once ignited it burns rapidly and emits toxic gases. NASFM asks the Commission to require that upholstered furniture manufacturers and retailers provide flammability warnings to the public. The Commission is docketing the correspondence as a petition under provisions of the FFA, 15 U.S.C. 1191–1204.

Interested parties may obtain a copy of the petition by writing or calling the Office of the Secretary, Consumer Product Safety Commission, Washington, DC 20207; telephone (301) 504–0800. A copy of the petition is also available for inspection from 8:30 a.m. to 5 p.m., Monday through Friday, in the Commission's Public Reading Room, Room 419, 4330 East West Highway, Bethesda, Maryland.

[1] The Commission voted 2–1 to publish this notice requesting comments on the petition. Chairman Ann Brown and Commissioner Thomas Moore voted in favor of publication while Commissioner Mary Sheila Gall voted against it for the reason provided in a separate statement. A copy of Commissioner Gall's statement is available from the Office of the Secretary.

Dated: April 1, 1999.

Sadye E. Dunn,

Secretary, Consumer Product Safety Commission.

[FR Doc. 99–8496 Filed 4–5–99; 8:45 am]

BILLING CODE 6355–01–P

DEPARTMENT OF DEFENSE

Office of the Secretary

Submission of OMB review; comment request

ACTION: Notice.

The Department of Defense has submitted to OMB for clearance, the following proposal for collection of information under the provisions of the Paperwork Reduction Act (44 U.S.C. Chapter 35).

TITLE, ASSOCIATED FORM, AND OMB NUMBER: Nutritional Assessment and Dietary Intake; AF Form 2572; OMB Number 0701–0130.

TYPE OF REQUEST: Reinstatement.

NUMBER OF RESPONDENTS: 12,000.

RESPONSES PER RESPONDENT: 1.

ANNUAL RESPONSES: 12,000.

AVERAGE BURDEN PER RESPONSE: 15 minutes.

ANNUAL BURDEN HOURS: 3,000.

NEEDS AND USES: Respondents are medical beneficiaries referred for nutrition counseling. The information is used within individual military hospital settings only. Information is requested from individuals to determine their usual daily food intake and exercise patterns. The diet counselor assesses this information and determines adequacy of the diet, as well as conformance of the usual diet with prescribed dietary guidelines. This assessment is required by the Joint Commission on Accreditation of Healthcare Organizations.

AFFECTED PUBLIC: Individuals or households.

FREQUENCY: On occasion.

RESPONDENT'S OBLIGATION: Voluntary.

OMB DESK OFFICER: Mr. Edward C. Springer. Written comments and recommendations on the proposed information collection should be sent to Mr. Springer at the Office of Management and Budget, Desk Officer for DoD, Room 10236, New Executive Office Building, Washington, DC 20503.

DOD CLEARANCE OFFICER: Mr. Robert Cushing. Written requests for copies of the information collection proposal should be sent to Mr. Cushing, WHS/DIOR, 1215 Jefferson Davis Highway, Suite 1204, Arlington, VA 22202–4302.

Dated: March 30, 1999.

Patricia L. Toppings,

Alternate OSD Federal Register Liaison Officer, Department of Defense.

[FR Doc. 99–8360 Filed 4–5–99; 8:45 am]

BILLING CODE 5001–10–M

DEPARTMENT OF DEFENSE

Office of the Secretary

Revised Non-Foreign Overseas Per Diem Rates

AGENCY: DoD, Per Diem, Travel and Transportation Allowance Committee.

ACTION: Notice of revised non-foreign overseas per diem rates.

SUMMARY: The Per Diem, Travel and Transportation Allowance Committee is publishing Civilian Personnel Per Diem Bulletin Number 206. This bulletin lists revisions in the per diem rates prescribed for U.S. Government employees for official travel in Alaska, Hawaii, Puerto Rico, the Northern Mariana Islands and Possessions of the United States. AEA changes announced in Bulletin Number 194 remain in effect. Bulletin Number 206 is being published in the **Federal Register** to assure that travelers are paid per diem at the most current rates.

EFFECTIVE DATE: April 1, 1999.

SUPPLEMENTARY INFORMATION: This document gives notice of revisions in per diem rates prescribed by the Per Diem and Transportation Allowance Committee for non-foreign areas outside the continental United States. It supersedes Civilian Personnel Per Diem Bulletin Number 205. Distribution of Civilian Personnel Per Diem Bulletins by mail was discontinued. Per Diem Bulletins published periodically in the **Federal Register** now constitute the only notification of revisions in per diem rates to agencies and establishments outside the Department of Defense. For more information or questions about per diem rates, please contact your local travel office. The text of the Bulletin follows:

MAXIMUM PER DIEM RATES FOR OFFICIAL TRAVEL IN ALASKA, HAWAII, THE COMMONWEALTHS OF PUERTO RICO AND THE NORTHERN MARIANA ISLANDS AND POSSESSIONS OF THE UNITED STATES BY FEDERAL GOVERNMENT CIVILIAN EMPLOYEES

Locality	Maximum lodging amount (A)	+	M&IE rate (B)	=	Maximum per diem rate (C)	Effective date
ALASKA:						
ANCHORAGE [INCL NAV RES]:						
05/01–09/30	161		63		224	03/01/99
10/01–04/30	89		56		145	03/01/99
BARROW	115		73		188	03/01/99
BETHEL	105		60		165	03/01/99
COLD BAY	110		68		178	03/01/99
CORDOVA	85		62		147	03/01/98
CRAIG:						
05/01–08/31	115		52		161	05/01/97
09/01–04/30	79		64		143	05/01/97
DEADHORSE	80		67		147	03/01/99
DENALI NATIONAL PARK:						
06/01–08/31	115		52		167	03/01/98
09/01–05/31	90		50		140	03/01/98
DILLINGHAM	95		59		154	08/01/98
DUTCH HARBOR-UNALASKA	110		71		181	03/01/99
EARECKSON AIR STATION	80		57		137	03/01/99
EIELSON AFB:						
05/15–09/15	118		58		176	03/01/99
09/16–05/14	81		54		135	03/01/99
ELMENDORF AFB:						
05/01–09/30	161		63		224	03/01/99
10/01–04/30	89		56		145	03/01/99
FAIRBANKS:						
05/15–09/15	118		58		176	03/01/99
09/16–05/14	81		54		135	03/01/99
FT. RICHARDSON:						
05/01–09/30	161		63		224	03/01/99
10/01–04/30	89		56		145	03/01/99
FT. WAINWRIGHT:						
05/15–09/15	118		58		176	03/01/99
09/16–05/14	81		54		135	03/01/99
GLENNALLEN	90		52		142	10/01/98
HEALY:						
06/01–08/31	115		52		167	03/01/98
09/01–05/31	90		50		140	03/01/98
HOMER:						
05/15–09/15	115		58		173	03/01/99
09/16–05/14	98		57		155	03/01/99
JUNEAU	105		68		173	03/01/99
KAKTOVIK	175		74		249	03/01/99
KAVIK CAMP	125		69		194	03/01/99

MAXIMUM PER DIEM RATES FOR OFFICIAL TRAVEL IN ALASKA, HAWAII, THE COMMONWEALTHS OF PUERTO RICO AND THE NORTHERN MARIANA ISLANDS AND POSSESSIONS OF THE UNITED STATES BY FEDERAL GOVERNMENT CIVILIAN EMPLOYEES—Continued

Locality	Maximum lodging amount (A)	+	M&IE rate (B)	=	Maximum per diem rate (C)	Effective date
KENAI–SOLDOTNA:						
05/01–09/30	114		63		177	03/01/99
10/01–04/30	76		59		135	03/01/99
KENNICOTT	149		68		217	10/01/98
KETCHIKAN:						
05/01–09/30	110		74		184	03/01/99
10/01–04/30	88		73		161	03/01/99
KING SALMON	101		70		171	03/01/99
KLAWOCK:						
05/01–08/31	95		66		161	05/01/97
09/01–04/30	79		64		143	05/01/97
KODIAK	99		67		166	03/01/99
KOTZEBUE:						
05/01–08/31	137		75		212	03/01/99
09/01–04/30	73		61		134	03/01/99
KULIS AGS:						
05/01–09/30	161		63		224	03/01/99
10/01–04/30	89		56		145	03/01/99
MCCARTHY	149		68		217	10/01/98
METLAKATLA:						
05/30–10/01	85		52		137	03/01/99
10/02–05/29	78		51		129	03/01/99
MURPHY DOME:						
05/15–09/15	118		58		176	03/01/99
09/16–05/14	81		54		135	03/01/99
NOME:						
03/01–03/31	117		58		175	03/01/99
04/01–02/29	92		56		148	03/01/99
NUIQSUT	120		69		189	03/01/99
PETERSBURG	87		57		144	03/01/99
POINT HOPE	130		70		200	03/01/99
POINT LAY	105		67		172	03/01/99
PRUDHOE BAY	80		67		147	03/01/99
SEWARD:						
05/01–09/30	122		65		187	03/01/99
10/01–04/30	86		61		147	03/01/99
SITKA–MT. EDGECOMBE:						
04/01–09/04	101		60		161	03/01/98
09/05–03/31	83		59		142	03/01/98
SKAGWAY:						
05/01–09/30	110		74		184	03/01/99
10/01–04/30	88		73		161	03/01/99
SPRUCE CAPE	99		67		166	03/01/99
TANANA:						
03/01–03/31	117		58		175	03/01/99
04/01–02/29	92		56		148	03/01/99
UMIAT	107		33		140	03/01/99
VALDEZ:						
05/15–10/01	110		63		173	03/01/99
10–02–05/14	84		60		144	03/01/99
WAINWRIGHT	127		82		209	03/01/99
WRANGELL:						
05/01–09/30	110		74		184	03/01/99
10/01–04/30	88		73		161	03/01/99
YAKUTAT	110		68		178	03/01/99
[OTHER]	80		57		137	03/01/99
AMERICAN SAMOA:						
AMERICAN SAMOA	73		53		126	03/01/97
GUAM:						
GUAM (INCL ALL MIL INSTAL)	150		79		229	05/01/98
HAWAII:						
CAMP H M SMITH	110		61		171	07/01/97
EASTPAC NAVAL COMP TELE AREA	110		61		171	07/01/97
FT. DERUSSEY	110		61		171	07/01/97
FT. SHAFTER	110		61		171	07/01/97

MAXIMUM PER DIEM RATES FOR OFFICIAL TRAVEL IN ALASKA, HAWAII, THE COMMONWEALTHS OF PUERTO RICO AND THE NORTHERN MARIANA ISLANDS AND POSSESSIONS OF THE UNITED STATES BY FEDERAL GOVERNMENT CIVILIAN EMPLOYEES—Continued

Locality	Maximum lodging amount (A)	+	M&IE rate (B)	=	Maximum per diem rate (C)	Effective date
HICKAM AFB	110		61		171	07/01/97
HONOLULU NAVAL & MC RES CTR	110		61		171	07/01/97
ISLE OF HAWAII: HILO	80		52		132	06/01/98
ISLE OF HAWAII: OTHER	100		54		154	06/01/98
ISLE OF KAUAI:						
05/01–11/30	115		62		177	06/01/98
12/01–04/30	136		64		200	06/01/98
ISLE OF KURE	60		41		101	07/01/97
ISLE OF MAUI	112		64		176	06/01/98
ISLE OF OAHU	110		61		171	07/01/97
KANEOHE BAY MC BASE	110		61		171	07/01/97
KEKAHA PACIFIC MISSILE RANGE FAC:						
05/01–11/30	115		62		177	06/01/98
12/01–04/30	136		64		200	06/01/98
KILAUEA MILITARY CAMP	80		52		132	06/01/98
LULUALEI NAVAL MAGAZINE	110		61		171	07/01/97
NAS BARBERS POINT	110		61		171	07/01/97
PEARL HARBOR [INCL ALL MILITARY]	110		61		171	07/01/97
SCHOFIELD BARRACKS	110		61		171	07/01/97
WHEELER ARMY AIRFIELD	110		61		171	07/01/97
[other]	79		62		141	06/01/93
JOHNSTON ATOLL:						
JOHNSTON ATOLL	13		9		22	07/01/97
MIDWAY ISLANDS:						
MIDWAY ISLANDS [INCL ALL MIL]	60		41		101	07/01/97
NORTHERN MARIANA ISLANDS:						
ROTA	105		71		176	05/01/97
SAIPAN	170		78		248	05/01/97
[OTHER]	61		53		114	05/01/97
PUERTO RICO:						
BAYAMON:						
04/16–11/14	117		67		184	09/01/98
11/15–04/15	148		70		218	09/01/98
CAROLINA:						
04/16–11/14	117		67		184	09/01/98
11/15–04/15	148		70		218	09/01/98
FAJARDO [INCL CEIBA, LUQUILLO & HUMACAO]	82		60		142	03/01/98
FT. BUCHANAN [INCL GSA SVC CTR, GUAYNABO]:						
04/16–11/14	117		67		184	09/01/98
11/15–04/15	148		70		218	09/01/98
LUIS MUNOZ MARIN IAP AGS:						
04/16–11/14	117		67		184	09/01/98
11/15–04/15	148		70		218	09/01/98
MAYAGUEZ	94		60		154	06/01/98
PONCE	101		67		168	09/01/98
ROOSEVELT ROADS & NAV STA	82		60		142	03/01/98
SABANA SECA [INCL ALL MILITARY]:						
04/16–11/14	117		67		184	09/01/98
11/15–04/15	148		70		218	09/01/98
SAN JUAN & NAV RES STA:						
04/16–11/14	150		70		220	04/01/99
11/15–04/15	167		72		239	04/01/99
[OTHER]	66		57		123	09/01/98
VIRGIN ISLANDS (U.S.):						
ST. CROIX:						
04/15–12/14	107		75		182	08/01/98
12/15–04/14	131		78		209	08/01/98
ST. JOHN:						
04/15–12/14	286		89		375	08/01/98
12/15–04/14	413		102		515	08/01/98
ST.THOMAS:						
04/15–12/14	171		75		246	08/01/98
12/15–04/14	285		87		372	08/01/98

MAXIMUM PER DIEM RATES FOR OFFICIAL TRAVEL IN ALASKA, HAWAII, THE COMMONWEALTHS OF PUERTO RICO AND THE NORTHERN MARIANA ISLANDS AND POSSESSIONS OF THE UNITED STATES BY FEDERAL GOVERNMENT CIVILIAN EMPLOYEES—Continued

Locality	Maximum lodging amount		M&IE rate		Maximum per diem rate	Effective date
	(A)	+	(B)	=	(C)	
WAKE ISLAND:						
WAKE ISLAND	60		32		92	09/01/98

Dated: March 31, 1999.

Patricia L. Toppings,

Alternate OSD Federal Register Liaison Officer, Department of Defense.

[FR Doc. 99–8359 Filed 4–5–99; 8:45 am]

BILLING CODE 5001–10–M

DEPARTMENT OF DEFENSE

Department of the Air Force

HQ USAF Scientific Advisory Board Meeting

The S&T Strategic Plan Thrust Review Meeting in support of the HQ USAF Scientific Advisory Board will meet at Woodshole, MA on September 14–16, 1999 from 8:00 a.m. to 5:00 p.m.

The purpose of the meeting is to gather information and receive briefings for the S&T Strategic Plan Thrust Review.

The meeting will be closed to the public in accordance with Section 552b (c) of Title 5, United States Code, specifically subparagraphs (1) and (4) thereof.

For further information, contact the HQ USAF Scientific Advisory Board Secretariat at (703) 697–8404.

Carolyn A. Lunsford,

Air Force Federal Register Liaison Officer.

[FR Doc. 99–8370 Filed 4–5–99; 8:45 am]

BILLING CODE 5001–05–P

DEPARTMENT OF EDUCATION

Office of Elementary and Secondary Education; Notice of Final Funding Priorities for Fiscal Year (FY) 1999 Under the Native Hawaiian Curriculum Development, Teacher Training, and Recruitment Program

SUMMARY: The Secretary announces final funding priorities for fiscal year (FY) 1999 under the Native Hawaiian Curriculum Development, Teacher Training, and Recruitment Program. Under the priorities, funds under the Native Hawaiian Curriculum Development, Teacher Training and Recruitment Program will be used to support activities in the areas of (1) computer literacy and technology education, (2) agriculture education partnerships, (3) astronomy, (4) indigenous health, (5) waste management, and (6) prisoner education.

EFFECTIVE DATE: May 6, 1999.

SUPPLEMENTARY INFORMATION: On December 29, 1998, the Secretary published in the **Federal Register** a notice of proposed funding priorities announcing that the Secretary intended to use $1,500,000 of FY 1999 funds available under the Curriculum Development, Teacher Training and Recruitment Program to fund one or two projects in each of six identified priority categories: (1) computer literacy and technology education, (2) agriculture education partnerships, (3) astronomy, (4) indigenous health, (5) waste management, and (6) prisoner education. This notice announces the final funding priorities for the program.

Note: This notice of final funding priorities does not solicit applications. A notice inviting applications under this competition is published in a separate notice in this issue of the **Federal Register**.

Analysis of Comments and Changes

Four parties submitted various comments in response to the Secretary's notice of proposed funding priorities for the program.

Comment: One commenter recommended that the Department run a broader competition without any absolute priorities.

Discussion: The Secretary believes that the absolute priorities are necessary to help focus limited resources on addressing some of the specific needs of the Native Hawaiian community.

Changes: None.

Comment: One commenter suggested that the Department support a new Native Hawaiian student-centered academy, governed by a local school board, and independent of the Hawaii Department of Education.

Discussion: The Secretary believes that the priorities that have been adopted better further the statutory purposes of the program.

Changes: None.

Comments: The other two commenters were generally supportive of the priorities, and offered various suggestions for strengthening or clarifying some of the priorities. These commenters also recommended that the Department continue to support activities in the field of aquaculture. In addition, one of the two commenters recommended that the astronomy priority be expanded to include support of educational and training opportunities for all grade levels, including community college, baccalaureate, graduate, and postgraduate levels.

Discussion: The Department has just completed the support of aquaculture projects under this program, and has determined that it would be more appropriate at this time to use the resources available to fund new projects in the identified priority categories. Furthermore, the Secretary believes that the astronomy priority as originally proposed better meets the statutory purposes of the program.

The Secretary believes that many of the other suggestions from these commenters, which form the basis for the additional program design information provided in the notice inviting applications for new awards published elsewhere in this issue of the **Federal Register**, can be incorporated into applications as part of the proposed projects.

Changes: None.

ABSOLUTE PRIORITIES: Under 34 CFR 75.105(c)(3), the Secretary gives an absolute preference to applications that focus entirely on activities in one of the following six areas:

(1) Computer literacy and technology education—to support curriculum development, teacher training and model programs designed to increase computer literacy and access for Native

Hawaiian elementary and secondary school students;

(2) Agriculture education partnerships—to support the integration of agricultural and business practices into high school curriculum through the expansion of partnerships between community-based agricultural businesses and high schools with high concentrations of Native Hawaiian students;

(3) Astronomy—to support the development of educational programs in astronomy for Native Hawaiian elementary and secondary school students to assist them in reaching challenging science and mathematics standards and to encourage them to enter the field of astronomy;

(4) Indigenous health—to support curriculum development, teacher training, and instruction activities that will foster a better understanding and knowledge of Native Hawaiian traditional medicine, particularly among Native Hawaiian elementary and secondary students;

(5) Waste management innovation—to study and document traditional Hawaiian practices of sustainable waste management and to prepare teaching materials for educational purposes and for demonstration of the use of native Hawaiian plants and animals for waste treatment and environmental remediation; and

(6) Prisoner education—to support programs that target juvenile offenders and/or youth at risk of becoming juvenile offenders. Comprehensive and culturally sensitive strategies for reaching the target population will include family counseling, basic education/job skills training, and the involvement of community elders as mentors.

The Secretary funds under the FY 1999 competition under this program only applicants that meet one of these absolute priorities.

FOR FURTHER INFORMATION CONTACT: Beth Baggett, U.S. Department of Education, 400 Maryland Avenue, S.W., Washington, D.C. 20202–6140. Telephone (202) 260–2502. Individuals who use a telecommunications device for the deaf (TDD) may call the Federal Information Relay Service (FIRS) at 1–800–877–8339 between 8 a.m. and 8 p.m., Eastern time, Monday through Friday.

Individuals with disabilities may obtain this document in an alternate format (e.g., Braille, large print, audiotape, or computer diskette) on request to the contact person listed in the preceding paragraph.

Individuals with disabilities may obtain a copy of the application package in an alternate format, also, by contacting that person. However, the Department is not able to reproduce in an alternate format the standard forms included in the application package.

Electronic Access to This Document: Anyone may view this document, as well as all other Department of Education Documents published in the **Federal Register**, in text or portable document format (pdf) on the World Wide Web at either of the following sites: *http://ocfo.ed.gov/fedreg.htm* or *http://www.ed.gov/news.html*.

To use the pdf you must have the Adobe Acrobat Reader Program with Search, which is available free at either of the previous sites. If you have questions about using the pdf, call the U.S. Government Printing Office toll free at 1–888–293–6498.

Program Authority: 20 U.S.C. 7905.

Dated: March 30, 1999.

Judith Johnson,

Acting Assistant Secretary, Elementary and Secondary Education.

[FR Doc. 99–8395 Filed 4–5–99; 8:45 am]

BILLING CODE 4000–01–P

DEPARTMENT OF EDUCATION

[CFDA No.: 84.297A]

The Native Hawaiian Curriculum Development, Teacher Training and Recruitment Program

AGENCY: Department of Education.

ACTION: Notice inviting applications for new awards for fiscal year (FY) 1999.

PURPOSES OF PROGRAM: The Native Hawaiian Curriculum Development, Teacher Training and Recruitment Program supports—

(1) *Curricula*—the development of curricula to address the needs of Native Hawaiian students, particularly elementary and secondary students, which may include programs of instruction conducted in the Native Hawaiian language and mathematics and science curricula incorporating the relevant application of Native Hawaiian culture and traditions;

(2) *Preteacher training*—the development and implementation of preservice teacher training to ensure that student teachers within the State, particularly those who are likely to be employed in schools with a high concentration of Native Hawaiian students, are prepared to better address the unique needs of Native Hawaiian students within the context of Native Hawaiian culture, language, and traditions;

(3) *Inservice teacher training*—the development and implementation of inservice teacher training to ensure that teachers, particularly those employed in schools with a high concentration of Native Hawaiian students, are prepared to better address the unique needs of Native Hawaiian students within the context of Native Hawaiian culture, language, and traditions; and

(4) *Teacher recruitment*—the development and implementation of teacher recruitment programs to enhance teacher recruitment within communities with a high concentration of Native Hawaiian students and to increase the numbers of teachers who are of Native Hawaiian ancestry.

Consistent with these statutory purposes, the Secretary has established absolute priorities that will govern the distribution of funds under the program.

ELIGIBLE APPLICANTS: Native Hawaiian educational organizations or educational entities with experience in developing or operating Native Hawaiian programs or programs of instruction conducted in the Native Hawaiian language.

APPLICATIONS AVAILABLE: April 6, 1999.

DEADLINE FOR TRANSMITTAL OF APPLICATIONS: May 21, 1999.

DEADLINE FOR INTERGOVERNMENTAL REVIEW: July 20, 1999.

AVAILABLE FUNDS: $1,500,000.

ESTIMATED NUMBER OF AWARDS: 1–2 awards in each of the six absolute priority categories.

ESTIMATED SIZE OF AWARDS: $125,000.

ESTIMATED RANGE OF AWARDS: $125,000—$250,000.

Note: These estimates are projections for the guidance of potential applicants. The Department is not bound by any estimates in this notice.

PROJECT PERIOD: Up to 36 months.

APPLICABLE REGULATIONS: The Education Department General Administrative Regulations (EDGAR) in 34 CFR Parts 74, 75, 77, 79, 81, 82, and 85.

ABSOLUTE PRIORITIES: The Secretary has published elsewhere in this issue of the **Federal Register** a notice of final priorities, which establishes absolute priorities in the following areas under the Curriculum Development, Teacher Training and Recruitment Program: (1) computer literacy and technology education; (2) agriculture education partnerships; (3) astronomy; (4) indigenous health; (5) waste management; and (6) prisoner education programs.

Under 34 CFR 75.105(c)(3), the Secretary will fund under this competition only applicants that meet one of the absolute priorities.

STATUTORY PRIORITIES: In accordance with section 9209(b) of the Elementary and Secondary Education Act, the Secretary gives priority to awarding grants for activities that —

(1) focus on the needs of at-risk youth; or

(2) employ a program of instruction conducted in the Native Hawaiian language.

These statutory priorities are embedded in the selection criteria for this competition.

SUPPLEMENTARY INFORMATION: Applications will be reviewed on the basis of the selection criteria included in this notice. All funded projects must meet one of the absolute priorities. While applicants have discretion in determining how best to address the absolute priorities, the Secretary is particularly interested in receiving quality proposals that include the components described below. Funded proposals may lack some of these specific components, but address the absolute priorities in other effective ways.

(1) *Computer literacy and technology education.* While computer skills have become increasingly necessary for both academic and employment success in today's society, many Native Hawaiian students lack meaningful access to computers and computer training. The Secretary believes that high quality computer literacy and technology education programs should be conducted for Native Hawaiian elementary and secondary school students. These model programs should consist of curricula development, teacher training, and programs of instruction designed to increase both academic and career opportunities for elementary and secondary students. In providing these services, eligible entities are encouraged to partner with other organizations or institutions with expertise in utilizing state-of-the-art centralized computer systems and teleconferencing capabilities.

(2) *Agriculture education partnerships.* In order to improve the economic and social conditions in many rural areas of Hawaii, the Secretary supports the expansion of partnerships between community-based agricultural businesses and high schools with high concentrations of Native Hawaiian students. These agriculture education partnerships will integrate agricultural and business practices into high school curricula through model programs involving curricula development, teacher training, and instructional programs.

(3) *Astronomy.* The Secretary believes that the development of instructional programs for elementary and secondary school students in astronomy would assist Native Hawaiians in reaching challenging science and mathematics standards. Model programs would include the development of culturally appropriate advanced mathematics and science curricula based upon recent scientific findings in the field of astronomy. Exposure to the use of observatory and other astronomical equipment as well as other experiential and hands-on activities would be fostered through such programs.

(4) *Indigenous health programs.* Because of a lack of available instruction in Native Hawaiian traditional medicine, knowledge of traditional healing practices is being lost for younger generations of Native Hawaiians. Younger Native Hawaiians are not being trained adequately, for example, on where traditional medicines can be found, how they are harvested in a manner that will conserve the resource, and how such medicines are to be applied. The Secretary believes that this problem can be addressed through the support of teacher training, curriculum development, and instructional activities in traditional medicine.

(5) *Prisoner education.* In Hawaii, the number of incarcerated Native Hawaiians, including Native Hawaiian juveniles, far exceeds their relative percentage in the State's population. The Secretary believes that a successful prisoner education program would target convicted, at-risk Native Hawaiian youths as an alternative to incarceration. A comprehensive program should consist of prevention, intervention and treatment services as well as education, job training, judicial and case management services. A funded applicant should have experience in working with and in encouraging the re-integration of youth offenders into schools or career paths or both within the community in a culturally sensitive manner. To help ensure success of the program, funded applicants should work in partnership with the Hawaii State Department of Labor and Industrial Relations, the Office of Youth Services, and other appropriate agencies.

(6) *Waste management treatment programs.* Funds under this priority support curriculum development, teaching training, and instructional programs related to the study and documentation of traditional Hawaiian practices of sustainable waste management, including activities to prepare Native Hawaiians to participate actively in the risk assessment and remediation of environmental health hazards that impact upon Native Hawaiians. A successful applicant should have specific knowledge of the capacities of Native Hawaiian plants and animals to contribute to the management of modern waste materials. The applicant should have experience in educational programming, especially for elementary and secondary school grades, so that knowledge about traditional Hawaiian methods of sustainable waste management can be developed and used. The project may include an emphasis on environmental technologies applicable to the remediation of environmental health risks to Hawaiian homelands and surplus Federal lands subject to reuse.

SELECTION CRITERIA: The Secretary will use the following selection criteria in 34 CFR 75.210 to evaluate applications under this competition. Under the criterion ''Quality of the project design'', the factors are weighed in accordance with the points indicated. With respect to the other criteria, the factors under each criterion are weighed equally. The maximum score for all of the selection criteria is 100 points. The maximum score for each criterion, and the factors within each criterion, are as follows:

(a) *Significance (15 points).* (1) The Secretary considers the significance of the proposed project.

(2) In determining the significance of the proposed project, the Secretary considers the following factors:

(i) The significance of the problem or issue to be addressed by the proposed project.

(ii) The importance or magnitude of the results or outcomes likely to be attained by the proposed project, especially improvements in teaching and student achievement.

(b) *Quality of the project design (35 points).* (1) The Secretary considers the quality of the design of the proposed project.

(2) In determining the quality of the design of the proposed project, the Secretary considers the following factors:

(i) The extent to which the proposed project represents an exceptional approach for meeting statutory purposes and requirements. (10 points)

(ii) The extent to which the proposed project represents an exceptional approach to the priorities established for the competition. (10 points)

(iii) The extent to which the goals, objectives, and outcomes to be achieved by the proposed project are clearly specified and measurable. (10 points)

(iv) The extent to which the design of the proposed project is appropriate to, and will successfully address, the needs

of the target population or other identified needs. (5 points)

(c) *Quality of project personnel (10 points).* (1) The Secretary considers the quality of the personnel who will carry out the proposed project.

(2) In determining the quality of project personnel, the Secretary considers the extent to which the applicant encourages applications for employment from persons who are members of groups that have traditionally been under represented based on race, color, national origin, gender, age, or disability.

(3) In addition, the Secretary considers the following factors:

(i) The qualifications, including relevant training and experience, of the project director.

(ii) The qualifications, including relevant training and experience, of key project personnel.

(iii) The qualifications, including relevant training and experience, of project consultants or subcontractors.

(d) *Adequacy of resources (5 points).* (1) The Secretary considers the adequacy of resources for the proposed project.

(2) In determining the adequacy of resources for the proposed project, the Secretary considers the following factors:

(i) The adequacy of support, including facilities, equipment, supplies, and other resources, from the applicant organization or the lead applicant organization.

(ii) The extent to which the budget is adequate to support the proposed project.

(e) *Quality of the management plan (15 points).* (1) The Secretary considers the quality of the management plan for the proposed project.

(2) In determining the quality of the management plan for the proposed project, the Secretary considers the following factors:

(i) The adequacy of the management plan to achieve the objectives of the proposed project on time and within budget, including clearly defined responsibilities, time lines, and milestones for accomplishing project tasks.

(ii) The adequacy of procedures for ensuring feedback and continuous improvement in the operation of the proposed project.

(iii) The extent to which the time commitments of the project director and other key project personnel are appropriate and adequate to meet the objectives of the proposed project.

(f) *Quality of the project evaluation (20 points).* (1) The Secretary considers the quality of the evaluation to be conducted of the proposed project.

(2) In determining the quality of the evaluation, the Secretary considers the following factors:

(i) The extent to which the methods of evaluation provide for examining the effectiveness of project implementation strategies.

(ii) The extent to which the methods of evaluation include the use of objective performance measures that are clearly related to the intended outcomes of the project and will produce quantitative and qualitative data to the extent possible.

FOR APPLICATIONS OR INFORMATION CONTACT: Madeline E. Baggett, U.S. Department of Education, 400 Maryland Avenue, S.W., Washington, D.C. 20202–6140. Telephone (202) 260–2502. Individuals who use a telecommunications device for the deaf (TDD) may call the Federal Information Relay Service (FIRS) at 1–800–877–8339 between 8 a.m. and 8 p.m., Eastern time, Monday through Friday.

Individuals with disabilities may obtain this document in an alternate format (e.g., Braille, large print, audiotape, or computer diskette) on request to the contact person listed in the preceding paragraph.

Individuals with disabilities may obtain a copy of the application package in an alternate format, also, by contacting that person. However, the Department is not able to reproduce in an alternate format the standard forms included in the application package.

Electronic Access to this Document: Anyone may view this document, as well as all other Department of Education Documents published in the **Federal Register**, in text or portable document format (pdf) on the World Wide Web at either of the following sites:

http://ocfo.ed.gov/fedreg.htm or

http://www.ed.gov/news.html

To use the pdf you must have the Adobe Acrobat Reader Program with Search, which is available free at either of the previous sites. If you have questions about using the pdf, call the U.S. Government Printing Office toll free at 1–888–293–6498.

Note: The official application notice for a discretionary grant competition is the notice published in the **Federal Register**.

Program Authority: 20 U.S.C. 7909.

Dated: March 30, 1999.

Judith Johnson,

Acting Assistant Secretary for Elementary and Secondary Education.

[FR Doc. 99–8393 Filed 4–5–99; 8:45 am]

BILLING CODE 4000–01–P

DEPARTMENT OF EDUCATION

[CFDA No.: 84.209A]

The Native Hawaiian Family-Based Education Centers Program

AGENCY: Department of Education.

ACTION: Notice inviting applications for new awards for fiscal year (FY) 1999.

Purpose of Program: To expand the operation, throughout the Hawaiian Islands, of Family-Based Education Centers that include: (1) parent-infant programs for prenatal through three-year-olds; (2) preschool programs for four-and five-year-olds; (3) continued research and development; and (4) a long-term follow-up and assessment program, which may include educational support services for Native Hawaiian language immersion programs or transition to English speaking programs.

Eligible Applicants: Native Hawaiian educational organizations or educational entities with experience in developing or operating Native Hawaiian programs or programs of instruction conducted in the Native Hawaiian language.

Applications Available: April 6, 1999.

Deadline for Transmittal of Applications: May 21, 1999.

Deadline for Intergovernmental Review: July 20, 1999.

Available Funds: $2 million.

Estimated Number of Awards: 1 to 2.

Estimated Size of Awards: $1,000,000.

Estimated Range of Awards: $1,000,000–$2,000,000.

Note: These estimates are projections for the guidance of potential applicants. The Department is not bound by any estimates in this notice.

Project Period: Up to 36 months.

Applicable Regulations: The Education Department General Administrative Regulations (EDGAR) in 34 CFR Parts 74, 75, 77, 79, 81, 82, and 85.

Invitational Priority: Under the Family-Based Education Centers Program, the Secretary is particularly interested in receiving applications from eligible entities whose projects would include the development and implementation of an appropriate, culturally-relevant Native Hawaiian early education and care information system. The system would provide information relative to the specific needs and strengths in Native Hawaiian early childhood services, including: (1) a determination of the existence, use, and effectiveness of programs and services available to Native Hawaiians; (2) within existing data collection efforts

statewide, an identification of critical areas of need for services for Native Hawaiians; (3) a determination of the numbers and demographics of Native Hawaiians in each age group, prenatal through age five, that have need for strengthened services; (4) an assessment of the quality of existing services; (5) an identification of the gaps in services to that age group; and (6) a determination of where additional data needs to be gathered and a means of defining culturally-compatible measures for the collection of such data. The Secretary is especially interested in receiving proposals from entities that would address the early education and care needs of the targeted population through comprehensive, collaborative efforts with other appropriate organizations and agencies.

An application that meets this invitational priority receives no competitive or absolute preference over applications that do not meet the priority. However, all proposals under the Family-Based Education Centers competition must address the four components in section 9205 of the Elementary and Secondary Education Act, as outlined in the ''Purposes of Programs'' section of this Notice.

Selection Criteria: The Secretary will use the following selection criteria in 34 CFR 75.210 to evaluate applications under this competition. The maximum score for all of the selection criteria is 100 points. The maximum score for each criterion is indicated in parenthesis with the criterion. The criteria are as follows:

(a) *Significance (15 points).* (1) The Secretary considers the significance of the proposed project.

(2) In determining the significance of the proposed project, the Secretary considers the following factors:

(i) The significance of the problem or issue to be addressed by the proposed project.

(ii) The importance or magnitude of the results or outcomes likely to be attained by the proposed project, especially improvements in teaching and student achievement.

(b) *Quality of the project design (35 points).* (1) The Secretary considers the quality of the design of the proposed project.

(2) In determining the quality of the design of the proposed project, the Secretary considers the following factors:

(i) The extent to which the proposed project represents an exceptional approach for meeting statutory purposes and requirements.

(ii) The extent to which the goals, objectives, and outcomes to be achieved by the proposed project are clearly specified and measurable.

(iii) The extent to which the design of the proposed project is appropriate to, and will successfully address, the needs of the target population or other identified needs.

(c) *Quality of project personnel (10 points).* (1) The Secretary considers the quality of the personnel who will carry out the proposed project.

(2) In determining the quality of project personnel, the Secretary considers the extent to which the applicant encourages applications for employment from persons who are members of groups that have traditionally been under represented based on race, color, national origin, gender, age, or disability.

(3) In addition, the Secretary considers the following factors:

(i) The qualifications, including relevant training and experience, of the project director.

(ii) The qualifications, including relevant training and experience, of key project personnel.

(iii) The qualifications, including relevant training and experience, of project consultants or subcontractors.

(d) *Adequacy of resources (5 points).* (1) The Secretary considers the adequacy of resources for the proposed project.

(2) In determining the adequacy of resources for the proposed project, the Secretary considers the following factors:

(i) The adequacy of support, including facilities, equipment, supplies, and other resources, from the applicant organization or the lead applicant organization.

(ii) The extent to which the budget is adequate to support the proposed project.

(e) *Quality of the management plan (15 points).* (1) The Secretary considers the quality of the management plan for the proposed project.

(2) In determining the quality of the management plan for the proposed project, the Secretary considers the following factors:

(i) The adequacy of the management plan to achieve the objectives of the proposed project on time and within budget, including clearly defined responsibilities, time lines, and milestones for accomplishing project tasks.

(ii) The adequacy of procedures for ensuring feedback and continuous improvement in the operation of the proposed project.

(iii) The extent to which the time commitments of the project director and other key project personnel are appropriate and adequate to meet the objectives of the proposed project.

(f) *Quality of the project evaluation (20 points).* (1) The Secretary considers the quality of the evaluation to be conducted of the proposed project.

(2) In determining the quality of the evaluation, the Secretary considers the following factors:

(i) The extent to which the methods of evaluation provide for examining the effectiveness of project implementation strategies.

(ii) The extent to which the methods of evaluation include the use of objective performance measures that are clearly related to the intended outcomes of the project and will produce quantitative and qualitative data to the extent possible.

For Applications or Information Contact: Madeline E. Baggett, U.S. Department of Education, 400 Maryland Avenue, S.W., Washington, D.C. 20202–6140. Telephone (202) 260–2502. Individuals who use a telecommunications device for the deaf (TDD) may call the Federal Information Relay Service (FIRS) at 1–800–877–8339 between 8 a.m. and 8 p.m., Eastern time, Monday through Friday.

Individuals with disabilities may obtain this document in an alternate format (e.g., Braille, large print, audiotape, or computer diskette) on request to the contact person listed in the preceding paragraph.

Individuals with disabilities may obtain a copy of the application package in an alternate format, also, by contacting that person. However, the Department is not able to reproduce in an alternate format the standard forms included in the application package.

Electronic Access to this Document: Anyone may view this document, as well as all other Department of Education Documents published in the **Federal Register**, in text or portable document format (pdf) on the World Wide Web at either of the following sites: http://ocfo.ed.gov/fedreg.htm or http://www.ed.gov/news.html. To use the pdf you must have the Adobe Acrobat Reader Program with Search, which is available free at either of the previous sites. If you have questions about using the pdf, call the U.S. Government Printing Office toll free at 1–888–293–6498.

Note: The official application notice for a discretionary grant competition is the notice published in the **Federal Register**.

Program Authority: 20 U.S.C. 7905.

Dated: March 30, 1999.

Judith Johnson,

Acting Assistant Secretary, Elementary and Secondary Education.

[FR Doc. 99–8394 Filed 4–5–99; 8:45 am]

BILLING CODE 4000–01–P

DEPARTMENT OF ENERGY

Office of Arms Control and Nonproliferation Policy; Proposed Subsequent Arrangement

AGENCY: Department of Energy.

ACTION: Subsequent arrangement.

SUMMARY: This notice is being issued under the authority of Section 131 of the Atomic Energy Act of 1954, as amended (42 U.S.C. 2160). The Department is providing notice of a ''subsequent arrangement'' under the Agreement for Cooperation in the Peaceful Uses of Nuclear Energy Between the United States of America and the European Atomic Energy Community (EURATOM) and the Agreement for Cooperation Between the Government of the United States of America and the Government of Canada Concerning the Civil Uses of Atomic Energy.

This subsequent arrangement concerns the transfer of 90,552,300 grams of natural uranium in the form of hexafluoride from Cameco Corporation in Canada to Urenco Limited in the United Kingdom for toll enrichment. The enrichment will not exceed 20%. The material will then be transferred to Northern States Power in Minneapolis, MN for use in their commercial power reactor.

In accordance with Section 131 of the Atomic Energy Act of 1954, as amended, we have determined that this subsequent arrangement will not be inimical to the common defense and security.

This subsequent arrangement will take effect no sooner than fifteen days after the date of publication of this notice.

Dated: March 30, 1999.

For the Department of Energy.

Edward T. Fei,

Deputy Director, International Policy and Analysis Division, Office of Arms Control and Nonproliferation.

[FR Doc. 99–8451 Filed 4–5–99; 8:45 am]

BILLING CODE 6450–01–P

DEPARTMENT OF ENERGY

Office of Arms Control and Nonproliferation Policy; Proposed Subsequent Arrangement

AGENCY: Department of Energy.

ACTION: Subsequent Arrangement.

SUMMARY: This notice is being issued under the authority of Section 131 of the Atomic Energy Act of 1954, as amended (42 U.S.C. 2160). The Department is providing notice of a ''subsequent arrangement'' under the Agreement for Cooperation in the Peaceful Uses of Nuclear Energy Between the United States of America and the European Atomic Energy Community (EURATOM) and the Agreement for Cooperation Between the Government of the United States of America and the Government of Canada Concerning the Civil Uses of Atomic Energy.

This subsequent arrangement concerns the transfer of 3,078,600 grams of natural uranium in the form of hexafluoride from Cameco Corporation in Canada to Urenco Limited in the United Kingdom for toll enrichment. The enrichment will not exceed 20%. The material will then be transferred to Wolf Creek Nulcear Operation Corporation in Burlington, KS for use in their commercial power reactor.

In accordance with Section 131 of the Atomic Energy Act of 1954, as amended, we have determined that this subsequent arrangement will not be inimical to the common defense and security.

This subsequent arrangement will take effect no sooner than fifteen days after the date of publication of this notice.

Dated: March 30, 1999.

For the Department of Energy.

Edward T. Fei,

Deputy Director, International Policy and Analysis Division Office of Arms Control and Nonproliferation.

[FR Doc. 99–8452 Filed 4–5–99; 8:45 am]

BILLING CODE 6450–01–P

DEPARTMENT OF ENERGY

Supplement to the Draft Surplus Plutonium Disposition Environmental Impact Statement

AGENCY: Department of Energy.

ACTION: Notice of Intent.

SUMMARY: The Department of Energy (DOE) announces its intent to prepare a supplement to the Surplus Plutonium Disposition Draft Environmental Impact Statement (SPD EIS) pursuant to the National Environmental Policy Act (NEPA). The SPD Draft EIS (DOE/EIS–0283D) was issued for public comment in July 1998. The Supplement will update the SPD Draft EIS by examining the potential environmental impacts of using mixed oxide (MOX) fuel in six specific commercial nuclear reactors at three sites for the disposition of surplus weapons-grade plutonium. DOE identified these reactors through a competitive procurement process. The Department is planning to issue the Supplement to the SPD Draft EIS in April 1999. DOE will publish a separate Notice of Availability in the **Federal Register** at that time. This Notice of Intent describes the content of the Supplement to the SPD Draft EIS, solicits public comment on the Supplement, and announces DOE's intention to conduct a public hearing. Consistent with 40 CFR 1502.9(c)(4) and 10 CFR 1021.314(d), DOE has determined not to conduct scoping for the Supplement.

ADDRESSES: Requests for information concerning the plutonium disposition program can be submitted by calling (answering machine) or faxing them to the toll free number 1–800–820–5156, or by mailing them to: Bert Stevenson, NEPA Compliance Officer, Office of Fissile Materials Disposition, U.S. Department of Energy, Post Office Box 23786, Washington, DC 20026–3786.

FOR FURTHER INFORMATION CONTACT: For general information on the DOE NEPA process, please contact: Carol Borgstrom, Director, Office of NEPA Policy and Assistance, U.S. Department of Energy, 1000 Independence Avenue, S.W., Washington, DC 20585, 202–586–4600 or leave a message at 1–800–472–2756.

Additional information regarding the DOE NEPA process and activities is available on the Internet through the NEPA Home Page at http://www.eh.doe.gov/nepa.

SUPPLEMENTARY INFORMATION:

Background

In October 1994, the Secretary of Energy and the Congress created the Office of Fissile Materials Disposition (MD) within the Department of Energy (DOE) to focus on the elimination of surplus highly enriched uranium (HEU) and plutonium surplus to national defense needs. As one of its major responsibilities, MD is tasked with determining how to disposition surplus weapons—usable plutonium. In January 1997, DOE issued a Record of Decision (ROD) for the Storage and Disposition of Weapons—Usable Fissile Materials Final Programmatic Environmental Impact Statement (S&D PEIS) (DOE/EIS–

0229; December 1996). In that ROD, DOE decided to pursue a strategy that would allow for the possibility of both the immobilization of surplus plutonium and the use of surplus plutonium as mixed oxide (MOX) fuel in existing domestic, commercial reactors. DOE is in the process of completing the Surplus Plutonium Disposition Environmental Impact Statement (SPD Draft EIS) (DOE/EIS–0283D; July 1998) to choose a site(s) for plutonium disposition activities and to determine the technology(ies) that will be used to support this effort.

Related Procurement Action

To support the timely undertaking of the surplus plutonium disposition program, DOE initiated a procurement action to contract for MOX fuel fabrication and reactor irradiation services. The services requested in this procurement process include design, licensing, construction, operation, and eventual deactivation of a MOX facility, as well as irradiation of the MOX fuel in three to eight existing domestic, commercial reactors, should the decision be made by DOE to go forward with the MOX program.

On May 19, 1998, DOE issued a Request for Proposal (RFP) (Solicitation Number DE–RP02–98CH10888) that defined limited activities that may be performed prior to issuance of the SPD EIS ROD. These activities include non-site-specific work primarily associated with the development of the initial conceptual design for the fuel fabrication facility, and plans (paper studies) for outreach, long lead-time procurements, regulatory management, facility quality assurance, safeguards, security, fuel qualifications, and deactivation. No construction would be started on a MOX fuel fabrication facility until the SPD EIS ROD is issued. The MOX facility, if built, would be DOE-owned, licensed by the Nuclear Regulatory Commission, and located at one of four candidate DOE sites. DOE has designated the Savannah River Site as the preferred alternative for the MOX fuel fabrication facility.

Based on a review of proposals received in response to the RFP, DOE determined in January 1999 that one proposal was in the competitive range. Under this proposal, MOX fuel would be fabricated at a DOE site and then irradiated in one of six domestic commercial nuclear reactors.

Environmental Review During Procurement Action

An environmental critique was prepared in accordance with DOE's National Environmental Policy Act (NEPA) regulations at 10 CFR 1021.216. Because an EIS is in progress on this action, DOE required offerors to submit reasonably available environmental data and analyses as a part of their proposals. DOE independently evaluated and verified the accuracy of the data provided by the offeror in the competitive range, and prepared an environmental critique for consideration before the selection was made. The Environmental Critique was used by DOE to determine:

(1) if there are any important environmental issues in the offeror's proposal that may affect the selection process; and

(2) if the potential environmental impacts of the offeror's proposal were bounded by impacts presented in the S&D PEIS and SPD Draft EIS or whether additional analysis was required in the SPD Final EIS.

As required by Section 216, the Environmental Critique included a discussion of the purpose of the procurement; the salient characteristics of the offeror's proposal; any licenses, permits or approvals needed to support the program; and an evaluation of the potential environmental impacts of the offer. The Environmental Critique is a procurement-sensitive document and subject to all associated restrictions. DOE then prepared a synopsis, which summarizes the Environmental Critique and reduces business-sensitive information to a level that will not compromise the procurement process. The Synopsis will be filed with the Environmental Protection Agency and made available to the public.

Contract Award

As a result of the procurement process described above, in March 1999, the Department of Energy contracted with Duke Engineering & Services, COGEMA, Inc., and Stone & Webster to provide mixed oxide fuel fabrication and reactor irradiation services. The team, known as DUKE COGEMA STONE & WEBSTER or DCS, has its corporate headquarters in Charlotte, NC. Subcontractors to DCS include Duke Power Company, Charlotte, NC and Virginia Power Company, Richmond, VA, who will provide the reactor facilities in which mixed oxide fuel will be used upon receipt of Nuclear Regulatory Commission license amendments. Other major subcontractors include Nuclear Fuel Services, Inc., Erwin, TN; Belgonucleaire, Brussels, Belgium; and Framatome Cogema Fuels of Lynchburg, VA. Under the contract, the team will also modify six existing U.S. commercial light water reactors at three sites to irradiate mixed oxide fuel assemblies. These reactors sites are Catawba in York, SC; McGuire in Huntersville, NC; and North Anna in Mineral, VA. The team will be responsible for obtaining a license to operate the fuel fabrication facility and the license modifications for the reactors from the Nuclear Regulatory Commission. Full execution of this contract is contingent on DOE's completion of the SPD EIS, as provided by 40 CFR 1021.216(i).

Supplement to the Surplus Plutonium Disposition Draft Environmental Impact Statement

The purpose of the Supplement to the SPD Draft EIS is to update the Draft by including specific information available as a result of the award of the DCS contract. The Supplement to the SPD Draft EIS will contain background information on the SPD Draft EIS; changes made to the SPD Draft EIS (Section 1.7.2); a description of the reactor sites (Section 3.7); impacts of irradiating mixed oxide fuel in existing light water reactors (Section 4.28); Facility Accidents (Appendix K); Analysis of Environmental Justice (Appendix M); and the Environmental Synopsis (Appendix O).

DOE anticipates that the Supplement to the SPD Draft EIS will be available in April. DOE intends to hold an interactive hearing in Washington, DC in May 1999 to discuss issues and receive oral and written comments on the Supplement to the Draft SPD EIS. The Notice of Availability will provide specific information concerning the date, time and location for the public hearing.

Issued in Washington, DC this 31st day of March 1999, for the United States Department of Energy.

David Michaels,

Assistant Secretary, Environment, Safety and Health.

[FR Doc. 99–8455 Filed 4–5–99; 8:45 am]

BILLING CODE 6450–01–P

DEPARTMENT OF ENERGY

Office of Science; Biological and Environmental Research Advisory Committee

AGENCY: Department of Energy.

ACTION: Notice of open meeting.

SUMMARY: This notice announces a meeting of the Biological and Environmental Research Advisory Committee. Federal Advisory Committee Act (Public Law 92–463, 86 Stat. 770) requires that public notice of

these meetings be announced in the **Federal Register**.

DATES: Thursday, April 22, 1999, 8:30 a.m. to 5:30 p.m.; and Friday, April 23, 1999, 8:30 a.m. to 12:00 p.m.

ADDRESSES: American Geophysical Union, 2000 Florida Avenue, N.W., Washington, D.C. 20009.

FOR FURTHER INFORMATION CONTACT: Dr. David Thomassen (301–903–9817; david.thomassen@science.doe.gov), or Ms. Shirley Derflinger (301–903–0044; shirley.derflinger@science.doe.gov), Designated Federal Officers, Biological and Environmental Research Advisory Committee, U.S. Department of Energy, Office of Science, Office of Biological and Environmental Research, SC–70, 19901 Germantown Road, Germantown, Maryland 20874–1290.

SUPPLEMENTARY INFORMATION: Purpose of the Meeting: To provide advice on a continuing basis to the Director, Office of Science of the Department of Energy, on the many complex scientific and technical issues that rise in the development and implementation of the biological and environmental research program.

Tentative Agenda

Thursday, April 22, 1999

8:30 a.m.—Welcoming Remarks
8:40 a.m.—Remarks from Director, Office of Science
9:40 a.m.—Low Dose Radiation Research Program
10:30 a.m.—New Directions in Bioengineering
11:30 a.m.—Science Talk, Medical Imaging
2:00 p.m.—Talk, National Science Foundation in the New Millennium
3:00 p.m.—Carbon Management & Climate Change Technology Initiative
3:15 p.m.—Scientific Simulation Initiative
5:00 p.m.—Public Comments and Adjourn

Friday, April 23, 1999

8:30 a.m.—State of Biological and Environmental Research (BER)/ FY2000 Outlook
9:30 a.m.—Human Genome Program Update
10:45 a.m.—BER Structural Biology Program
11:45 a.m.—Public Comments and Adjourn

Public Participation: The day and a half meeting is open to the public. If you would like to file a written statement with the Committee, you may do so either before or after the meeting. If you would like to make oral statements regarding any of the items on the agenda, you should contact David Thomassen or Shirley Derflinger at the address or telephone numbers listed above. You must make your request for an oral statement at least five business days before the meeting. Reasonable provision will be made to include the scheduled oral statements on the agenda. The Chairperson of the Committee will conduct the meeting to facilitate the orderly conduct of business. Public comment will follow the 10-minute rule.

Minutes: The minutes of this meeting will be available for public review and copying within 30 days at the Freedom of Information Public Reading Room, IE–190, Forrestal Building, 1000 Independence Avenue, S.W., Washington, D.C., between 9:00 a.m. and 4:00 p.m., Monday through Friday, except Federal holidays.

Issued in Washington, D.C. on March 31, 1999.

Rachel M. Samuel,

Deputy Advisory Committee Management Officer.

[FR Doc. 99–8453 Filed 4–5–99; 8:45 am]

BILLING CODE 6450–01–P

DEPARTMENT OF ENERGY

Environmental Management Site-Specific Advisory Board, Idaho National Engineering and Environmental Laboratory

AGENCY: Department of Energy.

ACTION: Notice of open meeting.

SUMMARY: This notice announces a meeting via telephone conference call of the Environmental Management Site-Specific Advisory Board (EM SSAB), Idaho National Engineering and Environmental Laboratory (INEEL). The Federal Advisory Committee Act (Public Law 92–463, 86 Stat. 770) requires that public notice of these meetings be announced in the **Federal Register**.

DATES: Wednesday, April 21, 1999, 1:30 p.m. (MST).

There will be a full Board telephone conference call beginning at 1:30 p.m. (MST).

FOR FURTHER INFORMATION CONTACT: Ms. Wendy Green Lowe, INEEL Board Facilitator, Jason Associates Corp. (208–522–1662) or visit the Board's Internet homepage at http://www.ida.net/users/cab. You may also contact Mr. Charles Rice, INEEL Board Chair, c/o Jason Associates Corporation.

SUPPLEMENTARY INFORMATION:

Purpose of the Board: The purpose of the Board is to make recommendations to DOE and its regulators in the areas of environmental restoration, waste management, and related activities.

To participate in the conference call, the Board members, the public, and other interested parties may call Ms. Lowe at the phone number above to get the conference call telephone number and pass code. Following opening comments by the Board chair, Chuck Rice, the Board's facilitator will describe the process and agenda that will be followed during the call. Parties interested in participating in the conference call are encouraged to call in at the beginning of the call.

Tentative Agenda: Discuss, develop consensus on, and finalize a recommendation currently being drafted by the board's Spent Nuclear Fuel Committee (chaired by Board member Jim Bondurant). If achieved through consensus, the recommendation—prepared in response to the Department of Energy's recent Notice of Intent to Prepare an Environmental Impact Statement (EIS) for Electrometallurgical Treatment of Sodium-Bonded Spent Nuclear Fuel in the Conditioning Facility at Argonne National Laboratory-West, INEEL—will transmit the Board's comments on the scope of the EIS.

Public Participation: In compliance with the Federal Advisory Committee Act, the public is invited to join the conference call, listen to the Board's deliberations, and provide comment during a specific time segment that will be set aside for public participation. Written statements may be filed with the Committee before the call. Gerald Bowman, the Designated Federal Officer and Assistant Manager for Laboratory Development, is empowered to conduct the meeting in a fashion that will facilitate the orderly conduct of business. Each individual wishing to make public comment will be provided a maximum of 5 minutes to present their comments.

Minutes: The minutes of this conference call will be available for public review and copying at the Freedom of Information Public Reading Room, 1E–190, Forrestal Building, 1000 Independence Avenue, SW, Washington, DC 20585 between 9:00 a.m. and 4 p.m., Monday-Friday, except Federal holidays. Minutes will also be available by writing to Charles M. Rice, INEEL Citizens' Advisory Board Chair, 477 Shoup Ave., Suite 205, Idaho Falls, Idaho 83402 or by calling Wendy Green Lowe, the Board Facilitator, at (208) 522–1662.

Issued at Washington, DC on April 1, 1999.

Rachel Samuel,

Deputy Advisory Committee Management Officer.

[FR Doc. 99–8448 Filed 4–5–99; 8:45 am]

BILLING CODE 6450–01–M

DEPARTMENT OF ENERGY

Energy Information Administration

Agency Activities: Comment Request on Collection and Dissemination of Natural Gas Information.

SUMMARY: The Energy Information Administration (EIA) has undertaken a process to analyze its natural gas information collection and dissemination program to ensure its continuing accuracy, validity, adequacy, and reliability. As part of this process, EIA is soliciting comments from users of natural gas information as well as respondents to EIA's surveys.

DATES: Written comments must be submitted on or before June 7, 1999. If you anticipate that you will be submitting comments, but find it difficult to do so within the period of time allowed by this notice, please advise the contact listed below of your intention to do so as soon as possible.

ADDRESSES: Send comments to Ann Ducca, Energy Information Administration, EI–44, Forrestal Building, U.S. Department of Energy, Washington, DC 20585. Alternately, Ms. Ducca may be contacted at (202) 586–6137, by e-mail at Ann.Ducca@eia.doe.gov, or by FAX at (202) 586–4420.

FOR FURTHER INFORMATION CONTACT: Requests for additional information should be directed to Ms. Ducca at the address listed above.

SUPPLEMENTARY INFORMATION:

I. Background
II. Current Actions
III. Request for Comments
IV. Future Actions

I. Background

In order to fulfill its responsibilities under the Federal Energy Administration Act of 1974 (Pub. L. 93–275) and the Department of Energy Organization Act (Pub. L. 95–91), the Energy Information Administration (EIA) is obliged to carry out a central, comprehensive, and unified energy data and information program. As part of this program, EIA collects, evaluates, assembles, analyzes, and disseminates data and information related to energy resource reserves, production, demand, and technology, and related economic and statistical information relevant to the adequacy of energy resources to meet demands in the near and longer term future for the Nation's economic and social needs.

With respect to natural gas, EIA collects information on reserves, production, processing, transmission, storage, distribution, and consumption. This information is used in EIA data products, analytical reports, and forecasts covering the entire natural gas industry. Appendix A contains information on EIA surveys collecting natural gas information as well as selected products.

The EIA, as part of its continuing effort to reduce paperwork and respondent burden and to ensure the practical utility of information collected (required by the Paperwork Reduction Act of 1995 (Pub. L. 104–13)), conducts a consultation program to provide the general public and other Federal agencies with an opportunity to comment on proposed and/or continuing reporting forms. This program helps to ensure that requested data can be provided in the desired format, reporting burden is minimized, reporting forms are clearly understood, and the impact of collection requirements on respondents can be properly assessed. In addition, comments received from this consultation program are an integral component of EIA's program to ensure the accuracy, validity, adequacy, and reliability of information collected.

II. Current Actions

Given changes in Federal laws and regulations (e.g., the Natural Gas Wellhead Decontrol Act of 1989 (Pub. L. 101–60) and Federal Energy Regulatory Commission Order 636) as well as changes in the U.S. economy, the natural gas industry has undergone a significant transformation in the past ten years. One example of the effect of this transformation is shown in the chart in Appendix B. The chart illustrates the fact that EIA's published natural gas prices reflect coverage of a decreasing percentage of all natural gas purchases. This has occurred because many natural gas consumers now purchase gas from companies not presently included in EIA's surveys.

Recognizing the changes in the industry, EIA has undertaken a project titled ''Next Generation * Natural Gas,'' also known as $(NG)^2$. The project will design and implement a new, comprehensive information program for natural gas to meet customer requirements in the post-2000 time frame. EIA wants to involve both data providers (i.e., respondents to its survey forms) and data users as part of the $(NG)^2$ project. Working together with its stakeholders, EIA can redesign its natural gas information system to be more effective and efficient.

To begin this new project, EIA held ten focus groups and plans to conduct executive interviews to solicit comments from some data users and data providers. That information will be one input for developing a draft outline of natural gas data requirements. EIA is now requesting comments from all interested persons.

III. Request for Comments

Prospective survey respondents, data users, and other interested parties should comment on issues that EIA should address as part its natural gas information system redesign project. Issues may include, but are not limited to: (1) what natural gas information should EIA collect (including the time periods, geographic breakdowns, economic sector breakdowns, and confidentiality treatments); (2) what data are needed to describe and assess wholesale and retail natural gas markets; (3) what natural gas reports, analyses, and forecasts are important to you and why; and (4) any other important topics EIA should consider during this project. Also, persons willing to actively participate with EIA during this process are desired and are encouraged to contact the person listed above.

Comments received in response to this notice may be summarized and/or included in the later requests for Office of Management and Budget approval of EIA's natural gas surveys. They also will become a matter of public record.

IV. Future Actions

EIA will use the comments in response to this notice along with comments received by other methods to help in the development of its natural gas data requirements. Then, draft survey instruments (e.g., forms and instructions) will be designed to collect the data. The survey instruments will be tested using a variety of methods including cognitive testing and small-scale pretests. This process should result in a redesigned natural gas information collection system that will be fully operational around 2002–2003.

To keep interested persons informed of the changing natural gas market and EIA's efforts to redesign its natural gas information system, EIA is developing a page for its Internet site (http://www.eia.doe.gov) and an automatic e-mail notification system (http://tonto.eia.doe.gov/email/index.htm). Both items should be operational by late June.

Statutory Authority: Section 3506 (c)(2)(A) of the Paperwork Reduction Act of 1995 (Pub. L. 104–13).

Issued in Washington, DC, March 30, 1999.

Jay H. Casselberry,

Agency Clearance Officer, Statistics and Methods Group, Energy Information Administration.

Appendix A. Energy Information Administration Natural Gas Surveys and Information Products

Major EIA surveys currently collecting natural gas information are:

EIA–23, ''Annual Survey of Domestic Oil and Gas Reserves,''
EIA–23P, ''Oil and Gas Well Operator Update Report,''
EIA–28, ''Financial Reporting System,''
EIA–64A, ''Annual Report of the Origin of Natural Gas Liquids Report,''
EIA–176, ''Annual Report of Natural and Supplemental Gas Supply and Disposition,''
EIA–191, ''Monthly Underground Gas Storage Report,''
EIA–412, ''Annual Report of Public Electric Utilities,''
EIA–457, ''Residential Energy Consumption Survey,''
EIA–627, ''Annual Quantity and Value of Natural Gas Report,''
EIA–759, ''Monthly Power Plant Report,''
EIA–767, ''Steam Electric Plant Operation and Design Report,''
EIA–782A, ''Refiners/Gas Plant Operators' Monthly Petroleum Product Sales Report,''
EIA–816, ''Monthly Natural Gas Liquids Report,''
EIA–846, ''Manufacturing Energy Consumption Survey,''
EIA–857, ''Monthly Report of Natural Gas Purchases and Deliveries to Consumers,''
EIA–860A, ''Annual Electric Generator Report—Utility,''
EIA–860B, ''Annual Electric Generator Report—Nonutility,''
EIA–871, ''Commercial Buildings Energy Consumption Report,''
EIA–886, ''Alternative Transportation Fuels and Alternative Fueled Vehicles,''
EIA–895, ''Monthly Quantity and Value of Natural Gas Report,'' and
EIA–900, ''Monthly Nonutility Power Report.''

Additional information about these surveys is provided at EIA's Internet site (http://www.eia.doe.gov/oss/forms.html)

EIA produces many reports utilizing natural gas data, analyses, and forecasts. Such reports include: the *Monthly Energy Review*; *Natural Gas Monthly*; *Natural Gas Annual*; *Annual Energy Outlook*; *International Energy Annual*; *Natural Gas Issues and Trends*; and *U.S. Crude Oil, Natural Gas, and Natural Gas Liquids Reserves Annual Report*. These reports as well as other energy information products may be obtained by accessing EIA's Home Page (http://www.eia.doe.gov).

BILLING CODE 6450–01–P

Appendix B. Coverage of Natural Gas Prices Paid by Consumers

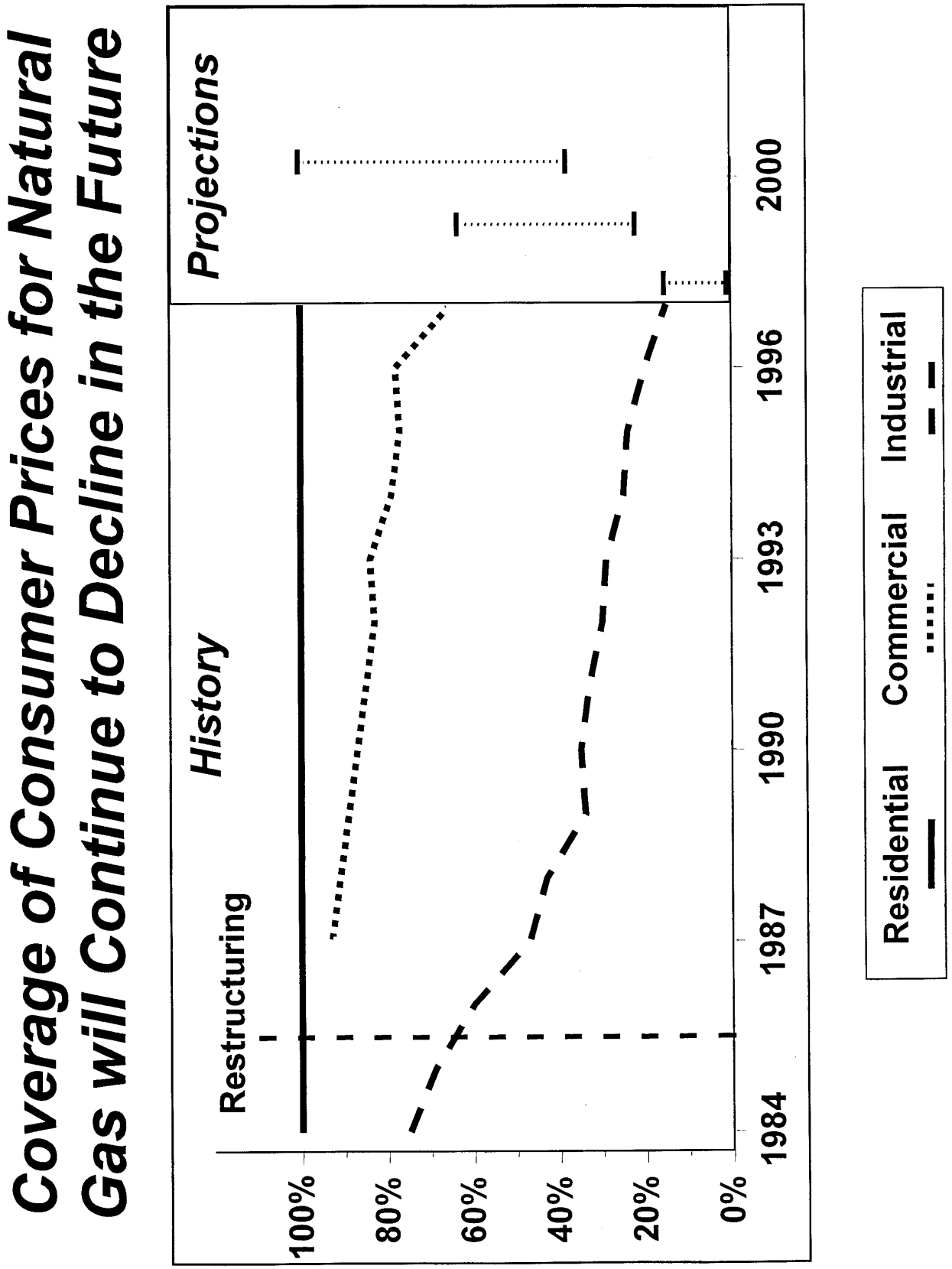

[FR Doc. 99–8450 Filed 4–5–99; 8:45 am]

BILLING CODE 6450–01–C

DEPARTMENT OF ENERGY

Energy Information Administration

American Statistical Association Committee on Energy Statistics; Notice of Open Meeting

This notice announces a meeting of the American Statistical Association's Committee on Energy Statistics, a utilized Federal Advisory Committee. Federal Advisory Committee Act (Public Law 92–463, 86 Stat. 770) requires that public notice of these meetings be announced in the **Federal Register**.

Date and Time: Thursday, April 29, 1999 8:30 am—4:45 pm; Friday, April 30, 1999 8:30 am—12:00 noon.

Place: U. S. Department of Energy, Forrestal Building 1000 Independence Ave., S.W., Washington, DC 20585.

For Further Information Contact: Mr. William I. Weinig, EI–70, Committee Liaison, Energy Information Administration, U.S. Department of Energy, Washington, DC 20585, Telephone: (202) 426–1101. Alternately, Mr. Weinig may be contacted by email at william.weinig@eia.doe.gov or by FAX at (202) 426–1083.

Purpose of Committee: To advise the Department of Energy, Energy Information Administration (EIA), on EIA technical statistical issues and to enable the EIA to benefit from the Committee's expertise concerning other energy-related statistical matters.

Tentative Agenda

Thursday, November 19, 1998

A. Opening Remarks by the Chairman
B. Major Topics
1. International Modeling
2. Cognitive and Field Testing for Establishment Surveys
3. Common Data Definitions
4. Common Collection and Processing System (CCAPS)and Anticipated Challenges for Discussion at the Fall Meeting
5. Increasing the Effectiveness of Ratio Edits by Using Joint Transformed Variables
6. Graphics Techniques

Friday, November 20, 1998

C. Major Topics
1. EIA's Next Environmental Study
2. Cognitive Interviews on EIA's Web Site
3. A Discussion of the Committee's Reactions to Cognitive Interview Protocol and EIA's Web Site
D. Closing Remarks by the Chairman

Public Participation: The meeting is open to the public. The Chairperson of the committee is empowered to conduct the meeting in a fashion that will facilitate the orderly conduct of business. Written statements may be filed with the committee either before or after the meeting. If there are any questions, please contact Mr. William I. Weinig, EIA Committee Liaison, at the address or telephone number listed above.

Minutes: Available for public review and copying at the Public Reading Room, (Room 1E–190), 1000 Independence Avenue, SW, Washington, DC 20585, (202) 586–3142, between the hours of 9:00 a.m. and 4:00 p.m., Monday through Friday.

Issued at Washington, DC on April 1, 1999.

Rachel M. Samuel,

Deputy Advisory Committee Management Officer.

[FR Doc. 99–8449 Filed 4–5–99; 8:45 am]

BILLING CODE 6450–01–P

DEPARTMENT OF ENERGY

Federal Energy Regulatory Commission

[Project No. 2666]

Bangor Hydro Electric Company; Notice of Authorization for Continued Project Operation

March 31, 1999.

On March 28, 1997, Bangor Hydro Electric Company, licensee for the Medway Project No. 2666, filed an application for a new or subsequent license pursuant to the Federal Power Act (FPA) and the Commission's regulations thereunder. Project No. 2666 is located on the West Branch of the Penobscot River in Penobscot County, Maine.

The license for Project No. 2666 was issued for a period ending March 31, 1999. Section 15(a)(1) of the FPA, 16 U.S.C. 808(a)(1), requires the Commission, at the expiration of a license term, to issue from year to year an annual license to the then licensee under the terms and conditions of the prior license until a new license is issued, or the project is otherwise disposed of as provided in Section 15 or any other applicable section of the FPA. If the project's prior license waived the applicability of Section 15 of the FPA, then, based on Section 9(b) of the Administrative Procedure Act, 5 U.S.C. 558(c), and as set forth at 18 CFR 16.21(a), if the licensee of such project has filed an application for a subsequent license, the licensee may continue to operate the project in accordance with the terms and conditions of the license after the minor or minor part license expires, until the Commission acts on its application. If the licensee of such a project has not filed an application for a subsequent license, then it may be required, pursuant to 18 CFR 16.21(b), to continue project operations until the Commission issues someone else a license for the project or otherwise orders disposition of the project.

If the project is subject to Section 15 of the FPA, notice is hereby given that an annual license for Project No. 2666 is issued to Bangor Hydro Electric Company for a period effective April 1, 1999, through March 31, 2000, or until the issuance of a new license for the project or other disposition under the FPA, whichever comes first. If issuance of a new license (or other disposition) does not take place on or before March 31, 2000, notice is hereby given that, pursuant to 18 CFR 16.18(c), an annual license under Section 15(a)(1) of the FPA is renewed automatically without further order or notice by the Commission, unless the Commission orders otherwise.

If the project is not subject to Section 15 of the FPA, notice is hereby given that Bangor Hydro Electric Company is authorized to continue operation of the Medway Project No. 2666 until such time as the Commission acts on its application for subsequent license.

Linwood A. Watson, Jr.,

Acting Secretary.

[FR Doc. 99–8379 Filed 4–5–99; 8:45 am]

BILLING CODE 6717–01–M

DEPARTMENT OF ENERGY

Federal Energy Regulatory Commission

[Docket No. RP99–265–000]

Boundary Gas, Inc., Notice of Proposed Changes in FERC Gas Tariff

March 31, 1999.

Take notice that on March 26, 1999, Boundary Gas, Inc. (Boundary) tendered for filing as part of its FERC Gas Tariff, Second Revised Volume No. 1, the following tariff sheets:

To become effective January 1, 1998:

First Revised Sheet No. 1
First Revised Sheet No. 32
First Revised Sheet No. 33

To become effective May 28, 1998:

First Revised Sheet No. 3
First Revised Sheet No. 4
Second Revised Sheet No. 5
First Revised Sheet No. 9
First Revised Sheet No. 26
First Revised Sheet No. 28
Frist Revised Sheet No. 30

To become effective July 2, 1998:

Second Revised Sheet No. 4
Third Revised Sheet No. 5
Second Revised Sheet No. 9
First Revised Sheet No. 10
Second Revised Sheet No. 26
Second Revised Sheet No. 28
Second Revised Sheet No. 30

To become effective August 1, 1998:

Second Revised Sheet No. 32

To become effective November 6, 1998:

Third Revised Sheet No. 4

Fourth Revised Sheet No. 5
Third Revised Sheet No. 9
Third Revised Sheet No. 26
Third Revised Sheet No. 28
Third Revised Sheet No. 30

To become effective January 1, 1999:

First Revised Sheet No. 15
First Revised Sheet No. 16
Third Revised Sheet No. 32

To become effective January 28, 1999

Second Revised Sheet No. 6

Boundary states that the primary purpose of this filing is to revise Boundary's tariff to reflect recent changes to the Boundary Phase 2 Gas Sales Agreement (Sales Agreement), which is incorporated into Boundary's tariff. Specifically, this filing is designed to reflect recent changes among Boundary's stockholders, who are also Boundary's only customers, and the elimination of the requirement that Boundary's customers submit their gas payments to an escrow agent. Boundary also states that the tariff filing reflects certain administrative changes.

Pursuant to 18 CFR 154.207, Boundary requests a waiver of the notice requirements for tariff filings in order to make these tariff sheets effective on the dates proposed in the tariff filing.

Boundary states that copies of this filing were served upon each of Boundary's customers and the state commissions in Connecticut, Massachusetts, New Hampshire, New Jersey, New York and Rhode Island.

Any person desiring to be heard or to protest said filing should file a motion to intervene or a protest with the Federal Energy Regulatory Commission, 888 First Street, N.E., Washington, D.C. 20426, in accordance with Sections 385.214 or 385.211 of the Commission's Rules and Regulations. All such motions or protests must be filed in accordance with Section 154.210 of the Commission's Regulation. Protests will be considered by the Commission in determining the appropriate action to be taken, but will not serve to make protestants parties to the proceedings. Any person wishing to become a party must file a motion to intervene. Copies of this filing are on file with the Commission and are available for public inspection in the Public Reference Room. This filing may be viewed on the web at http://www.ferc.fed.us/online/rims.htm (call 202–208–2222 for assistance).

Linwood A. Watson, Jr.,

Acting Secretary.

[FR Doc. 99–8377 Filed 4–5–99; 8:45 am]

BILLING CODE 6717–01–M

DEPARTMENT OF ENERGY

Federal Energy Regulatory Commission

[Docket No. CP99–275–000]

Great Lakes Gas Transmission Limited Partnership; Notice of Request Under Blanket Authorization

March 31, 1999.

Take notice that on March 29, 1999, Great Lakes Gas Transmission Limited Partnership (Great Lakes), One Woodward Avenue, Suite 1600, Detroit, Michigan 48226, filed a request, pursuant to Sections 157.205 and 157.212 of the Regulations, 18 CFR 157.205 and 157.212, of the Commission's regulations for authorization under Great Lakes' blanket certificate issued in Docket No. CP90–2053–000 to construct and operate a new meter station, to be located in Marenisco Township, Gogebic County, Michigan, all as more fully set forth in the application which is on file with the Commission and open to public inspection.[1] This filing may be viewed on the web at: http://www.ferc.fed.us/online/rims.htm (call 202–208–2222 for assistance).

The proposed facilities, it is said, would be located entirely within Great Lakes' existing right-of-way and would be used to deliver up to 1,560 dekatherms per day of natural gas to Northern States Power Company—Wisconsin (NSP–WI). Great Lakes states that NSP–WI would utilize these volumes to provide new natural gas service in the Township of Marenisco, which Township has not heretofore received natural gas service. Great Lakes further states that the estimated cost of constructing the new facilities is $291,000; the actual cost of construction would be borne by NSP–WI through payment of a contribution in aid of construction. Great Lakes further states that natural gas would be transported to the proposed meter station pursuant to an existing firm transportation agreement between itself and NSP–WI.

Any person or the Commission's staff may, within 45 days after issuance of the instant notice by the Commission, file a motion to intervene or notice of intervention, pursuant to Rule 214 of the Commission's Procedural Rules, 18 CFR 385.214, and pursuant to Section 157.205 of the Commission's Regulations, 18 CFR 157.205, a protest to the Request. If no protest is filed within the time allowed therefor, the proposed activity shall be deemed to be authorized effective the day after the time allowed for filing a protest. If a protest is filed and not withdrawn within 30 days after the time allowed for filing a protest, the instant request shall be treated as an application for authorization pursuant to Section 7 of the Natural Gas Act.

Linwood A. Watson, Jr.,

Acting Secretary.

[FR Doc. 99–8375 Filed 4–5–99; 8:45 am]

BILLING CODE 6717–01–M

[1] Great Lakes states that a copy of its Request is available for inspection electronically on its website at *http://www.greatlakesgas.com/transport/ferc/marenisco.htm.*

DEPARTMENT OF ENERGY

Federal Energy Regulatory Commission

[Docket No. TM99–2–166–000]

Kansas Pipeline Company; Notice of Revised Tariff Filing

March 31, 1999.

Take notice that on March 26, 1999, Kansas Pipeline Company (Kansas Pipeline) tendered for filing Revised Tariff Sheets, as part of its FERC Gas Tariff, Original Volume No. 1, to be effective April 1, 1999:

Second Revised Sheet No. 15
Second Revised Sheet No. 17
Second Revised Sheet No. 21
Second Revised Sheet No. 23
Second Revised Sheet No. 26
Second Revised Sheet No. 28
Second Revised Sheet No. 30
Second Revised Sheet No. 32

Kansas Pipeline states that this filing is made in accordance with Section 23 (Fuel Reimbursement Adjustment) of the General Terms and Conditions of Kansas Pipeline's FERC Gas Tariff. The substitute revised tariff sheets reflect corrections to the revised tariff sheets filed on October 1 and reflect the following corrected changes to the Fuel Reimbursement Percentages: (1) a 12.4% decrease in the Zone 1 Reimbursement Percentage for volumes delivered between April and October; (2) a 12.7% decrease in the Zone 1 Fuel Reimbursement Percentage for volumes delivered between November and March; (3) the Zone 2 Fuel Reimbursement Percentage remains at 0.00%; and (4) the Zone 3 Fuel Reimbursement Percentage remains at 0.00%.

Kansas Pipeline states that copies of this filing are being served on all affected customers and applicable state regulatory agencies.

Any person desiring to be heard or to protest said filing should file a motion to intervene or a protest with the Federal Energy Regulatory Commission,

888 First Street, N.E., Washington, D.C. 20426, in accordance with Sections 385.214 of 385.211 of the Commission's Rules and Regulations. All such motions or protests must be filed in accordance with Section 154.210 of the Commission''s Regulations. Protests will be considered by the Commission in determining the appropriate action to be taken, but will not serve to make protestants parties to the proceedings.

Any person wishing to become a party must file a motion to intervene. Copies of this filing are on file with the Commission and are available for public inspection in the Public Reference Room. This filing may be viewed on the web at http://www.ferc.fed.us/online/rims.htm (call 202–208–2222 for assistance).

Linwood A. Watson, Jr.,

Acting Secretary.

[FR Doc. 99–8378 Filed 4–5–99; 8:45 am]

BILLING CODE 6717–01–M

DEPARTMENT OF ENERGY

Federal Energy Regulatory Commission

Mid Louisiana Gas Company; Notice of Request Under Blanket Authorization

[Docket No. CP99–274–000]

March 31, 1999.

Take notice that on March 29, 1999, Mid Louisiana Gas Company (Mid Louisiana), 1100 Louisiana Street, Suite 2950, Houston, Texas 77002, filed in Docket No. CP99–274–000 a request pursuant to Sections 157.205 and 157.216 of the Commission's Regulations under the Natural Gas Act (18 CFR 157.205, 157.216) for authorization to abandon by sale to Mississippi Valley Gas Company (Mississippi Valley) certain pipeline facilities known as the T–26 Lateral and appurtenant facilities located in Adams County, Mississippi, under Mid Louisiana's blanket certificate issued in Docket No. CP82–539–000 pursuant to Section 7 of the Natural Gas Act, all as more fully set forth in the request that is on file with the Commission and open to public inspection. This filling may be viewed on the web at http://www.ferc.fed.us/online/rims.htm (call 202–208–2222 for assistance).

Mid Louisiana proposes to abandon by sale to Mississippi Valley its T–26 Lateral consisting of approximately 0.37 miles of 4½-inch pipe and 0.08 mile of 4-inch pipe and appurtenances located in Adams County, Mississippi. Mid Louisiana states that the facilities were initially constructed to provide delivery of gas for Mid Louisiana's merchant or sale obligation, and that today these facilities are utilized solely for the delivery of gas transported pursuant to Mid Louisiana's Firm Transportation Agreement No. MLG–Q–70165 with Mississippi River Corporation (MRC), dated September 1, 1993. Mid Louisiana states that it will continue to deliver volumes as contracted, however the point of delivery will be moved from the terminus of the T–26 Lateral to the point where the T–26 Lateral interconnects Mid Louisiana's mainline.

Mid Louisiana states that it and Mississippi Valley have agreed to the sale and purchase of the facilities, in the amount of $10, pursuant to a letter agreement dated August 28, 1998, and that MRC has consented to the abandonment and sale by document dated Federal 11, 1999.

Any person or the Commission's staff may, within 45 days after issuance of the instant notice by the Commission, file pursuant to Rule 214 of the Commission's Procedural Rules (18 CFR 385.214) a motion to intervene or notice of intervention and pursuant to Section 157.205 of the Regulations under the Natural Gas Act (18 CFR 157.205) a protest to the request. If no protest is filed within the time allowed therefor, the proposed activity shall be deemed to be authorized effective the day after the time allowed for filing a protest. If a protest is filed and not withdrawn within 30 days after the time allowed for filing a protest, the instant request shall be treated as an application for authorization pursuant to Section 7 of the Natural Gas Act.

Linwood A. Watson, Jr.,

Acting Secretary.

[FR Doc. 99–8374 Filed 4–5–99; 8:45 am]

BILLING CODE 6717–01–M

DEPARTMENT OF ENERGY

Federal Energy Regulatory Commission

[Docket No. CP99–21–001]

Northern Border Pipeline Company; Notice of Amendment

March 31, 1999.

Take notice that on March 25, 1999, Northern Border Pipeline Company (Northern Border), 1111 South 103rd Street, Omaha, Nebraska 68124–1000, filed in Docket No. CP99–21–001, an amendment to its pending application in Docket No. CP99–21–000, for a certificate of public convenience and necessity, pursuant to Section 7(c) of the Natural Gas Act and Part 157 of the Commission's regulations, to construct and operate pipeline and compression facilities, all as more fully set forth in the amendment which is on file with the Commission and open to public inspection. This filing may be viewed on the Internet at http://www.ferc.fed.us/online/rims.htm (call 202–208–2222 for assistance).

Specifically, Northern Border seeks to: (1) replace the compressor wheel and uprate the 6,500 HP electric drive compressor at Compressor Station No. 14 to a 13,000 HP electric drive compressor; (2) replace the compressor wheel and internals and uprate the 12,000 HP electric drive compressor at Compressor Station No. 17 to a 15,000 HP electric drive compressor; (3) install and operate a 13,000 HP electric drive compressor at Compressor Station Site No. 18; (4) construct and operate approximately 34.4 miles of 36-inch pipeline from Manhattan, Illinois to North Hayden, Indiana; (5) construct and operate a new meter station; and (6) other appurtenant facilities. Northern Border also withdraws its request to install compression at Compressor Station Nos. 2, 4, and 16 and will not make the previously proposed cooling modifications. Further, Northern Border withdraws its request for permission and approval to abandon and remove certain compression facilities. The change in facility configuration was prompted when two of the original project shippers, El Paso Energy Marketing Company and Minnesota Corn Processors, obtained firm capacity via capacity release subsequent to the filing of Docket No. CP99–21–000. Northern Border states that the estimated cost of the proposed facilities is $125.7 million. The proposed in-service date of the facilities is November 1, 2000.

Northern Border proposes to maintain its cost of service ratemaking methodology and roll-in to Rate Schedule T–1 (Northern Border's Part 284 firm transportation rate schedule) the cost of the new facilities with its existing system costs. Northern Border maintains that the aggregation of the proposed costs with existing facility costs will result in an increase in the unit cost under Rate Schedule T–1 that is less than the 5 percent presumption in the Commission's *Pricing Policy for New and Existing Facilities Constructed by Interstate Natural Gas Pipelines* (68 FERC ¶ 61,140 (1994)). Northern Border also asserts that its proposal will offer system-wide benefits to existing and prospective shippers.

Northern Border also requests a one-time waiver of Subsection 4.83 of Rate Schedule T–1 in Northern Border's FERC Gas Tariff, First Revised Volume No. 1, which details the calculation of

an average monthly rate base. Instead of calculating the average monthly rate base using the beginning and end-of-month balances as is currently in the tariff, Northern Border seeks to use a daily weighted average balance for the in-service month of a the proposed facilities.

Any person desiring to be heard or to make any protest with reference to said application should on or before April 21, 1999, file with the Federal Energy Regulatory Commission, 888 First Street, N.E., Washington, D.C. 20426, a motion to intervene or a protest in accordance with the requirements of the Commission's Rules of Practice and Procedure (18 CFR 385.211 and 385.214) and the regulations under the Natural Gas Act (18 CFR 157.10). All protests filed with the Commission will be considered by it in determining the appropriate action to be taken but will not serve to make the protestants parties to the proceeding. The Commission's rules require that protestors provide copies of their protests to the party or parties directly involved. Any person wishing to become a party in any proceeding herein must file a motion to intervene in accordance with the Commission's rules.

A person obtaining intervenor status will be placed on the service list maintained by the Secretary of the Commission and will receive copies of all documents filed by the applicant and by every one of the intervenors. An intervenor can file for rehearing of any Commission order and can petition for court review of any such order. However, an intervenor must submit copies of comments or any other filing it makes with the Commission to every other intervenor in the proceeding, as well as 14 copies with the Commission.

A person does not have to intervene, however, in order to have comments considered. A person, instead, may submit two copies of comments to the Secretary of the Commission. Commenters will be placed on the Commission's environmental mailing list, will receive copies of environmental documents and will be able to participate in meetings associated with the Commission's environmental review process. Commenters will not be required to serve copies of filed documents on all other parties. However, commenters will not receive copies of all documents filed by other parties or issued by the Commission and will not have the right to seek rehearing or appeal the Commission's final order to a federal court.

The Commission will consider all comments and concerns equally, whether filed by commenters or those requesting intervenor status.

Take further notice that, pursuant to the authority contained in and subject to the jurisdiction conferred upon the Commission by Sections 7 and 15 of the Natural Gas Act and the Commission's Rules of Practice and Procedure, a hearing will held without further notice before the Commission or its designee on this application if no motion to intervene is filed within the time required herein, if the Commission on its own review of the matter finds that permission and approval for the proposed abandonments and a grant of the certificate are required by the public convenience and necessity. If a motion for leave to intervene is timely filed, or if the Commission on its own motion believes that formal hearing is required, further notice of such hearing will be duly given.

Under the procedure herein provided for, unless otherwise advised, it will be unnecessary for Northern Border to appear or to be represented at the hearing.

Linwood A. Watson, Jr.,

Acting Secretary.

[FR Doc. 99–8373 Filed 4–5–99; 8:45 am]

BILLING CODE 6717–01–M

DEPARTMENT OF ENERGY

Federal Energy Regulatory Commission

Notice of Non-Project Use of Project Lands and Waters and Soliciting Comments, Motions To Intervene, and Protests

March 31, 1999.

Take notice that the following application has been filed with the Commission and is available for public inspection:

a. *Application Type*: Non-Project Use of Project Lands and Waters.

b. *Project No*: 2232–386.

c. *Date Filed*: March 15, 1999.

d. *Applicant*: Duke Energy Corporation.

e. *Name of Project*: Catawba-Wateree Hydroelectric Project.

f. *Location*: On Lake Hickory near the Lovelady Township, in Caldwell County, North Carolina. The project does not utilize federal or tribal lands.

g. *Filed Pursuant to*: Federal Power Act, 16 U.S.C. § 791(a)–825(r).

h. *Applicant Contact*: Mr. E.M. Oakley, Duke Energy Corporation P.O. Box 1006 (EC12Y), Charlotte, NC 28201–1006 (704) 382–5778.

i. *FERC Contact*: Any questions on this notice should be addressed to Brian Romanek at (202) 219–3076, or e-mail address: brian.romanek@ferc.fed.us.

j. *Deadline for filing comments and or motions*: May 7, 1999.

All documents (original and eight copies) should be filed with: David P. Boergers, Secretary, Federal Energy Regulatory Commission, Mail Code: DLC, HL–11.1, 888 First Street, N.E., Washington DC 20426.

Please include the project number (2232–386) on any comments or motions filed.

k. *Description of Proposal*: Duke Energy Corporation proposes to lease to Gunpowder, LLC (Riverbend) four parcels containing a total of 2.07 acres of project land for the construction of 67 boat slips, a loading dock, concrete boat ramp and the placement of rip rap to stabilize 500 feet of shoreline. The boat slips would provide access to the reservoir for residents of Riverbend Subdivision. No dredging is proposed.

l. *Locations of the Application*: A copy of the application is available for inspection and reproduction at the Commission's Public Reference Room, located at 888 first Street, NE, Room 2A, Washington, D.C. 20426, or by calling (202) 208–1371. This filing may be viewed on http://www.ferc.fed.us/online/rims.htm (call (202) 208–2222 for assistance). A copy is also available for inspection and reproduction at the address in item h above.

m. Individuals desiring to be included on the Commission's mailing list should so indicate by writing to the Secretary of the Commission.

n. This notice also consists of the following standard paragraphs: B, C1 and D2.

B. Comments, Protests, or Motions to Intervene—Anyone may submit comments, a protest, or a motion to intervene in accordance with the requirements of Rules of Practice and Procedure, 18 CFR 385.210, .211, .214. In determining the appropriate action to take, the Commission will consider all protests or other comments filed, but only those who file a motion to intervene in accordance with the Commission's Rules may become a party to the proceeding. Any comments, protests or motions to intervene must be received on or before the specified comment date for the particular application.

C1. Filing and Service of Responsive Documents—Any filings must bear in all capital letters the title ''COMMENTS'', ''RECOMMENDATIONS FOR TERMS AND CONDITIONS'', ''PROTEST'', OR ''MOTION TO INTERVENE'', as applicable, and the Project Number of the particular application to which the

filing refers. Any of the above-named documents must be filed by providing the original and the number of copies provided by the Commission's regulations to: The Secretary, Federal Energy Regulatory Commission, 888 First Street, N.E., Washington, D.C. 20426. A copy of any motion to intervene must also be served upon each representative of the Applicant specified in the particular application.

D2. Agency Comments—Federal, state, and local agencies are invited to file comments on the described application. A copy of the application may be obtained by agencies directly from the Applicant. If an agency does not file comments within the time specified for filing comments, it will be presumed to have no comments. One copy of an agency's comments must also be sent to the Applicant's representatives.

Linwood A. Watson, Jr.,

Acting Secretary.

[FR Doc. 99–8376 Filed 4–5–99; 8:45 am]

BILLING CODE 6717–01–M

DEPARTMENT OF ENERGY

Federal Energy Regulatory Commission

[Docket No. EL99–46–000]

Capacity Benefit Margin in Computing Available Transmission Capacity; Notice of Technical Conference and Potential Broadcast of Technical Conference and Request for Comments

March 31, 1999.

AGENCY: Federal Energy Regulatory Commission.

ACTION: Notice of Technical Conference and Potential Broadcast of Technical Conference and Request for Comments.

SUMMARY: The Federal Energy Regulatory Commission (Commission) notifies interested persons that the Commission Staff will convene a technical conference at the Commission regarding Capacity Benefit Margin on May 20 and 21, 1999, commencing at 10:00 A.M. each day. The Commission Staff invites any interested person wishing to speak at the technical conference to submit a request to make a statement. The Commission Staff also invites interested persons to submit written comments. At a later date, the Secretary will issue a further notice listing the speakers, panels and subjects for the technical conference.

DATES: Requests to speak at the technical conference must be filed with the Office of the Secretary, Federal Energy Regulatory Commission, 888 First Street, NE, Washington, DC 20426 on or before Monday, April 19, 1999.

Written comments must be received by 5:00 P.M., Friday, April 23, 1999.

Persons interested in receiving the Capitol Connection's live internet, telephone or satellite coverage of the technical conference for a fee must notify Shirley Al-Jarani or Julia Morelli at the Capitol Connection (703–993–3100) or contact them at Capitol Connection's website (www.capitolconnection.gmu.edu) by May 7, 1999. Persons interested in National Narrowcast Network's Hearing-On-The-Line service coverage of the technical conference live by telephone should call 202–966–2211 for further details.

The technical conference will be held on May 20 and 21, 1999, commencing at 10:00 A.M. each day.

ADDRESSES: The technical conference will be held at the Federal Energy Regulatory Commission, 888 First Street, NE, Washington, DC 20426.

FOR FURTHER INFORMATION CONTACT:

Charles Faust (Technical Issues), Office of Electric Power Regulation, 888 First Street, NE, Washington, DC 20426, 202–208–0564.

Andre Goodson (Legal Issues), Office of the General Counsel, 888 First Street, NE, Washington, DC 20426, 202–208–2167.

SUPPLEMENTARY INFORMATION: In addition to publishing the full text of this document in the **Federal Register**, the Commission also provides all interested persons an opportunity to inspect or copy the contents of this document during normal business hours in the Public Reference Room at 888 First Street, N.E., Room 2A, Washington, DC 20426.

The Commission Issuance Posting System (CIPS) provides access to the texts of formal documents issued by the Commission. CIPS can be accessed via Internet through FERC's Home Page (http://www.ferc.fed.us) using the CIPS link or the Energy Information Online icon. The full text of this document will be available on CIPS in ASCII and WordPerfect 6.1 format. CIPS is also available through the Commission's electronic bulletin board service at no charge to the user and may be access using a personal computer with a modem by dialing 202–208–1397, if dialing locally, or 1–800–856–3920, if dialing long distance. To access CIPS, set your communications software to 19200, 14400, 12000, 9600, 7200, 4800, 2400, or 1200 bps, full duplex, no parity, 8 data bits and 1 stop bit. User assistance is available at 202–208–2474 or by E-mail to CipsMaster@FERC.fed.us.

This document is also available through the Commission's Records and Information Management System (RIMS), an electronic storage and retrieval system of documents submitted to and issued by the Commission after November 16, 1981. Documents from November 1995 to the present can be viewed and printed. RIMS is available in the Public Reference Room or remotely via Internet through FERC's Homepage using the RIMS link or the Energy Information Online icon. User assistance is available at 202–208–2222, or by E-mail to RimsMaster@FERC.fed.us.

Finally, the complete text on diskette in WordPerfect format may be purchased from the Commission's copy contractor, RVJ International, Inc. RVJ International, Inc., is located in the Public Reference Room at 888 First Street, NE, Washington, DC 20426.

The Commission has directed the Commission Staff to convene a technical conference to be held on Thursday, May 20, 1999, and Friday, May 21, 1999, at the offices of the Federal Energy Regulatory Commission, 888 First Street, NE, Washington, DC 20426. The technical conference will commence at 10:00 a.m. each day and will be open to all interested persons. The technical conference will address Capacity Benefit Margin. The Commission Staff has attached to this notice a list of suggested subjects for discussion at the technical conference.

Persons wishing to speak at the technical conference must submit a request to make a statement in Docket No. EL99–46–000. This request should clearly specify that it concerns the Capacity Benefit Margin technical conference and must specify the name of the person desiring to speak and the party or parties the speaker represents. Persons with common interests or views are requested to file a joint request for participation, so that the Commission can accommodate the maximum number of participants. Requests must also include a brief synopsis of the issue or issues the speaker wishes to address as well as the speaker's position on the issue or issues. All requests must be filed with the Office of the Secretary, Federal Energy Regulatory Commission, 888 First Street, NE, Washington, DC 20426 on or before Monday, April 19, 1999.

The number of persons desiring to speak at the conference may exceed the time allotted. Therefore, based on the

requests to participate, the Commission Staff will put together panels of speakers representing a broad spectrum of interests and views for each panel. At a later date, the Secretary will issue a further notice listing the speakers, panels and subjects for the technical conference.

In addition, interested persons are invited to submit written comments addressing topics to be discussed at the technical conference.

To facilitate review of the comments, commenters should provide a one page executive summary of their comments. The comments should be no longer than 25 pages in length, double spaced, on 8½″ x 11″ paper, with standard margins.

The original and 14 copies of such comments must be received before 5:00 p.m., Friday, April 23, 1999. Comments should be submitted to the Office of the Secretary, Federal Energy Regulatory Commission, 888 First Street, NE, Washington, DC 20426 and should refer to Docket No. EL99–46–000.

In addition to filing paper copies, the Commission encourages the filing of comments either on computer diskette or via Internet E-Mail. Comments may be filed in the following formats: WordPerfect 6.1 or lower version, MS Word Office 97 or lower version, or ASCII format.

For diskette filing, include the following information on the diskette label: Docket No. EL99–46–000; the name of the filing entity; the software and version used to create the file; and the name and telephone number of a contact person.

For Internet E-Mail submittal, comments should be submitted to ''comment.rm@ferc.fed.us'' in the following format. On the subject line, specify Docket No. EL99–46–000. In the body of the E-Mail message, include the name of the filing entity; the software and version used to create the file, and the name and telephone number of the contact person. Attach the comment to the E-Mail in one of the formats specified above. The Commission will send an automatic acknowledgement to the sender's E-Mail address upon receipt. Questions on electronic filing should be directed to Brooks Carter at 202–501–8145, E-Mail address brooks.carter@ferc.fed.us.

Commenters should take note that, until the Commission amends its rules and regulations, the paper copy of the filing remains the official copy of the document submitted. Therefore, any discrepancies between the paper filing and the electronic filing or the diskette will be resolved by reference to the paper filing.

All comments will be placed in the Commission's public files and will be available for inspection in the Commission's Public Reference Room at 888 First Street, NE, Washington, DC 20426, during normal business hours. Additionally, comments can be viewed and printed remotely via the Internet through FERC's Homepage using the RIMS link or the Energy Information Online icon. User assistance is available at 202–208–2222, or by E-mail to RimsMaster@FERC.fed.us.

If there is sufficient interest, the Capitol Connection may offer the conference live for a fee over the Internet as well as via telephone and satellite. Persons interested in receiving the Capitol Connection's live internet, phone bridge or satellite coverage for a fee, please call Shirley Al-Jarani or Julia Morelli at the Capitol Connection (703–993–3100) or contact them at Capitol Connection's website (www.capitolconnection.gmu.edu) by May 7, 1999. In addition, National Narrowcast Network's Hearing-On-The-Line service covers all FERC meetings live by telephone so that interested persons can listen at their desks, from their homes, or from any phone, without special equipment. Billing is based on time on-line. Call 202–966–2211 for further details.

By direction of the Commission. Commissioner Bailey did not participate in this decision.

David P. Boergers,

Secretary.

What is CBM?

NERC's June 1996 publication, *Available Transfer Capability Definitions and Determination* (page 14), states:

> Capacity Benefit Margin (CBM) is that amount of transmission transfer capability reserved by load serving entities to ensure access to generation from interconnected systems to meet generation reliability requirements. Reservation of CBM by a load serving entity allows that entity to reduce its installed generating capacity below that which may otherwise have been necessary without interconnections to meet its generation reliability requirements.

It adds that if ''a load-serving entity maintains policies and procedures to reserve transfer capability for generation reliability purposes,'' CBM should be subtracted from Total Transmission Capacity (TTC) in computing Available Transmission Capacity (ATC).[1] It neither prescribes a specific methodology for computing CBM, nor dictates that a CBM adjustment of any amount be computed. Rather, the computations of ATC set forth in the publication create a placeholder for those utilities that elect to make a CBM adjustment. It appears that utilities have different views on what CBM is and how it is computed. Also, the decision as to whether and how to make a CBM adjustment appears to reside in the transmission provider's' merchant function, and it is not clear how decisions about CBM are made within the confines of the Commission's unbundling requirements.

Who is Allowed to use Transmission Capacity set Aside as CBM?

It appears that for many transmission providers transmission capacity set aside as CBM is not made available for firm transmission uses. However, some transmission providers do use CBM for their own firm uses, and some appear to make CBM available for the firm imports of any load-serving entity in the control area. There also appears to be some variation as to how CBM is made available for nonfirm open access offerings. Some utilities appear to make it available only during system emergencies, others appear to use CBM to meet the nonfirm uses of the transmission provider, while others appear to treat it as nonfirm ATC under their open access tariffs.

Is CBM an Economic Issue and, if so, is the Right Person Making the Economic Decision?

While CBM is often labeled a reliability issue, it is generally supported on the ground that it reduces the cost of maintaining generation reliability when compared to other alternatives that could be used to maintain generation reliability. In circumstances when there are multiple ways to maintain generation reliability that impact transmission access differently (*e.g.*, install generation

[1] The publication defines TTC as the amount of electric power that can be transferred over the interconnected transmission network in a reliable manner so as to ensure (1) that existing facilities will be operated within normal ratings and limits; (2) the electric systems are capable of absorbing dynamic power swings and remaining stable following a disturbance that results in the loss of a single system element; and (3) after contingencies and before operator-intervention, facility loadings do not exceed emergency limits and ratings. (pages 6–9) It notes that TTC may also be reduced to reflect a Transmission Reliability Margin which is defined as the transmission capability necessary to ensure that the interconnected transmission network is secure under a reasonable range of uncertainties in system conditions, including (1) the fact that the assumptions used to model TTC may need to be more conservative in the long term because less is known about the system parameters (*e.g.*, transactions, loads, generators) over extended periods and (2) the fact that actual operating conditions (*e.g.*, generator dispatch, parallel flows, and maintenance outages) may differ from those reflected in the model. (pages 13–14)

locally, purchase transmission to reach remote generating resources, or reduce firm ATC on the assumption that neighbors will help out during generation contingencies), the person making the choice may not be the same person, or the only person, that is affected by the economics of the decision.

Are There Considerations Other Than Reliability and Economics that Impact CBM Issues?

In *Pennsylvania-New Jersey-Maryland Interconnection*, 81 FERC ¶ 61,257 at 62,276–77 (1998), the Commission expressed the possibility that changes in CBM practices might raise transition issues. For example, in the short run, reliability could be affected if CBM practices are changed without providing time for those relying on it to make other arrangements. Equities may also be a consideration when the past economic decisions of transmission providers to use CBM were reasonable in the historical context.

The cost of transmission capacity which may be set aside for CBM is rolled into the basic transmission charge and apportioned pro rata among all transmission users. The differing CBM practices of utilities may support differing rate treatments.

[FR Doc. 99–8422 Filed 4–5–99; 8:45 am]
BILLING CODE 6717–01–M

ENVIRONMENTAL PROTECTION AGENCY (EPA)

[FRL–6319–4]

Proposed Prospective Purchaser Agreement Pursuant to the Comprehensive Environmental Response, Compensation and Liability Act of 1980, as Amended by the Superfund Amendments and Reauthorization Act, Container Recycling Superfund Site, Kansas City, KS

AGENCY: Environmental Protection Agency.

ACTION: Notice; request for public comment.

SUMMARY: Notice is hereby given that a proposed prospective purchaser agreement associated with the Container Recycling Superfund Site, located in Kansas City, Wyandotte County, Kansas, was executed by the agency on March 10, 1999 . The Site is an inactive drum reconditioning facility. The agreement is subject to final approval after the comment period. The Prospective Purchaser Agreement would resolve certain potential EPA claims under the Comprehensive Environmental Response, Compensation and Liability Act of 1980, as amended by the Superfund Amendments and Reauthorization Act of 1986 (''CERCLA''), against Alliance Industrial Service, LLC, the prospective purchaser (''the purchaser'').

The settlement would require the purchaser to remove and properly dispose of certain containerized wastes and several thousand spent drums located at the property. The purchaser would also be required to provide EPA access to the property.

For thirty (30) days following the date of publication of this document, the Agency will receive written comments relating to the proposed settlement.

DATES: Comments must be submitted on or before May 6, 1999.

ADDRESSES: Comments should reference the ''Container Recycling Superfund Site Prospective Purchaser Agreement'' and should be forwarded to Jim MacDonald, On-Scene Coordinator, U.S. Environmental Protection Agency, Region VII, 726 Minnesota Avenue, Kansas City, Kansas 66101.

The proposed settlement is available for public inspection at the U.S. Environmental Protection Agency, Region VII, 726 Minnesota Avenue, Kansas City, Kansas 66101. A copy of the proposed agreement may be obtained from Eileen Gendreau (913) 551–7736, at this address.

FOR FURTHER INFORMATION CONTACT: Mike Gieryic, Assistant Regional Counsel, U.S. Environmental Protection Agency, Region VII, 726 Minnesota Avenue, Kansas City, Kansas 66101, (913) 551–7822.

Dated: March 15, 1999.

Dennis Grams,

Regional Administrator, Region VII.

[FR Doc. 99–8468 Filed 4–5–99; 8:45 am]
BILLING CODE 6560–50–P

ENVIRONMENTAL PROTECTION AGENCY

[FRL–6311–7]

Proposed Settlement Under Section 122(h)(1) of the Comprehensive Environmental Response, Compensation and Liability Act

AGENCY: Environmental Protection Agency.

ACTION: Notice of proposed administrative settlement and opportunity for public comment—Conus Chemical Company Superfund Site.

SUMMARY: The United States Environmental Protection Agency (EPA) is proposing to enter into an administrative settlement to resolve certain claims under the Comprehensive Environmental Response, Compensation and Liability Act of 1980, as amended (CERCLA). Notice is being published to inform the public of the proposed settlement and of the opportunity to comment. This settlement concerns the Conus Chemical Company Superfund Site in Newark, New Jersey and is intended to resolve the site owner's liability for response costs incurred by EPA.

DATES: Comments must be provided by May 6, 1999.

ADDRESSES: Comments should be addressed to the United States Environmental Protection Agency, Office of Regional Counsel, 290 Broadway—17th Floor, New York, NY 10007, and should refer to: In the Matter of the Conus Chemical Company Superfund Site, Agreement for Recovery of Past Response Costs, U.S. EPA Index No. II–CERCLA–98–0116.

FOR FURTHER INFORMATION CONTACT: U.S. Environmental Protection Agency, Office of Regional Counsel, 290 Broadway—17th Floor, New York, NY 10007; Attention: Marc Seidenberg, Esq. (212) 637–3150.

SUPPLEMENTARY INFORMATION: In accordance with section 122(i)(1) of CERCLA, notice is hereby given of a proposed administrative settlement concerning the Conus Chemical Company Superfund Site located in Newark, New Jersey. Section 122(h)(1) of CERCLA provides EPA with authority to settle certain claims for response costs incurred by the United States when the settlement has received the approval of the Attorney General of the United States of America. The one settling party will pay $350,000 to reimburse EPA for response costs incurred at the Conus Chemical Company Superfund Site.

Dated: March 26, 1999.

William J. Muszynski,

Acting Regional Administrator, Region 2.

[FR Doc. 99–8481 Filed 4–5–99; 8:45 am]
BILLING CODE 6560–50–P

FARM CREDIT ADMINISTRATION

Sunshine Act Meeting

AGENCY: Farm Credit Administration.

SUMMARY: Notice is hereby given, pursuant to the Government in the Sunshine Act (5 U.S.C. 552b(e)(3)), that the April 8, 1999 regular meeting of the

Farm Credit Administration Board (Board) will not be held.

FOR FURTHER INFORMATION CONTACT: Vivian L. Portis, Secretary to the Farm Credit Administration Board, (703) 883–4025, TDD (703) 883–4444.

ADDRESSES: Farm Credit Administration, 1501 Farm Credit Drive, McLean, Virginia 22102–5090.

Dated: April 2, 1999.

Vivian L. Portis,

Secretary, Farm Credit Administration Board.

[FR Doc. 99–8581 Filed 4–2–99; 12:56 pm]

BILLING CODE 6705–01–P

FEDERAL COMMUNICATIONS COMMISSION

[CC Docket No. 92–237; DA 99–647]

Next Meeting of the North American Numbering Council

AGENCY: Federal Communications Commission.

ACTION: Notice.

SUMMARY: On April 2, 1999, the Commission released a public notice announcing the April 21 and April 22, 1999, meeting and agenda of the North American Numbering Council (NANC). The intended effect of this action is to make the public aware of the NANC's next meeting and its agenda.

FOR FURTHER INFORMATION CONTACT: Linda Simms, (202) 418–2330 or via the Internet at lsimms@fcc.gov or Jeannie Grimes at (202) 418–2313 or jgrimes@fcc.gov. The address is: Network Services Division, Common Carrier Bureau, Federal Communications Commission, 2000 M Street, NW, Suite 235, Washington, DC 20554. The fax number is: (202) 418–7314. The TTY number is: (202) 418–0484. After April 8, 1999, the address will be as follows: Common Carrier Bureau, Federal Communications Commission, Network Services Division, Portals II, 445 Twelfth Street, S.W., Room TW-C305, Washington, DC 20554.

SUPPLEMENTARY INFORMATION: Released: April 2, 1999.

The next meeting of the North American Numbering Council (NANC) will be held on Wednesday, April 21, 1999, from 8:30 a.m., until 5:00 p.m., and on Thursday, April 22, 1999, from 8:30 a.m., until 12 noon. at the Federal Communications Commission, Portals II, 445 Twelfth Street, S.W., Room TW-C305, Washington, DC 20554

FOR FURTHER INFORMATION CONTACT: Linda Simms at (202) 418–2330 or via the Internet at lsimms@fcc.gov or Jeannie Grimes at (202) 418–2313 or jgrimes@fcc.gov. The address is: Network Services Division, Common Carrier Bureau, Federal Communications Commission, 2000 M Street, NW, Suite 235, Washington, DC 20554. The fax number is: (202) 418–7314. The TTY number is: (202) 418–0484. Effective April 8, 1999, the address will be: Network Services Division, Common Carrier Bureau, Federal Communications Commission, Portals II, 445 Twelfth Street, S.W., Suite 6A–320, Washington, DC 20554

SUPPLEMENTARY INFORMATION: This meeting is open to the members of the general public. The FCC will attempt to accommodate as many participants as possible. The public may submit written statements to the NANC, which must be received two business days before the meeting. In addition, oral statements at the meeting by parties or entities not represented on the NANC will be permitted to the extent time permits. Such statements will be limited to five minutes in length by any one party or entity, and requests to make an oral statement must be received two business days before the meeting. Requests to make an oral statement or provide written comments to the NANC should be sent to Linda Simms at the address under **FOR FURTHER INFORMATION CONTACT**, stated above.

Proposed Agenda—Wednesday, April 21, 1999

1. Approval of March 16–17 and March 30, 1999, meeting minutes.
2. Local Number Portability Administration (LNPA) Working Group Report.
3. Issue Management Group—Local Number Portability Implementation. Report on best way to address concerns (*e.g.*, throughput and porting volumes) within the industry; what role the LNPA WG should play, and what are the options within the industry to address such issues.
4. Industry Numbering Committee (INC) Report. INC 500/900 Portability Report.
5. Numbering Resource Optimization (NRO) Working Group Report.
6. Cost Recovery Working Group Report. Discussion of NANC response recommendation to Illinois Number Pooling Subcommittee March 2, 1999, letter regarding treatment and funding of common pooling costs. NBANC Board Report, NANPA Billing and Collection Agent activities.
7. North American Numbering Plan Administration (NANPA) Oversight Working Group Report. Presentation of NANPA Performance Evaluation Report.

Thursday, April 22, 1999

8. Lockheed Martin NANP Exhaust Review Team. Lockheed Martin report on review of exhaust model.
9. Other Business.

Federal Communications Commission.

Blaise A. Scinto,

Deputy Chief, Network Services Division, Common Carrier Bureau.

[FR Doc. 99–8611 Filed 4–5–99; 8:45 am]

BILLING CODE 6712–01–P

FEDERAL EMERGENCY MANAGEMENT AGENCY

Agency Information Collection Activities: Proposed Collection; Comment Request

ACTION: Notice and request for comments.

SUMMARY: The Federal Emergency Management Agency, as part of its continuing effort to reduce paperwork and respondent burden, invites the general public and other Federal agencies to take this opportunity to comment on the proposed collection of information. In accordance with the Paperwork Reduction Act of 1995 (44 U.S.C. 3506(c)(2)(A)), this notice seeks comments on Federal assistance to States for the suppression of any fire that constitutes as a major disaster.

SUPPLEMENTARY INFORMATION. Section 420 of the Robert R. Stafford Disaster Relief and Emergency Assistance Act, Public Law 93–288, as amended, authorizes the President to provide assistance, including grants, equipment, supplies, and personnel, to any State for the suppression of any fire on publicly or privately-owned forest or grassland, which threatens such destruction as would constitute a major disaster. Under E.O. 12148, the President has delegated this authority to the Director of FEMA, who in turn has re-delegated the authority to the Response and Recovery Executive Associate Director. FEMA has issued regulations pertaining to fire suppression assistance (FSA) contained in 44 CFR, Part 206, Subpart L.

Collection of Information.

Title: Request for Fire Suppression Assistance.

Type of Information Collection: Reinstatement with change.

OMB Number: 3067–0066.

Form Numbers: FEMA Forms 90–58, 90–91; Standard Forms 424, 270.

Abstract: FEMA provides assistance for fire suppression of forest or

grassland fires, which threatens destruction to life/and or improved property as would constitute a major disaster under Fire Suppression Assistance (FSA). In order for FEMA to provide the necessary assistance to States for the fire suppression program activities, the following forms are used to collect information: FEMA Form 90–58, Request for Fire Suppression Assistance, used by the state to provide information to support the need for Federal assistance.

FEMA Form 90–91, Damage Survey Report, prepared by the Principal Advisor, State Forester, and a FEMA representative upon termination of eligible fire suppression assistance. Standard Form 424, Federal Assistance (referred to in FEMA as their Fire Project Application) submitted by a State immediately after FEMA's Regional Director terminates fire suppression assistance. Standard Form 270, Request for Advance or Reimbursement used by the State as an option to receive funds. In addition, under Section 420 of the Stafford Act there must be a FEMA-State Agreement. Also, a State Administrative Plan must be developed by the State for the Administration of a Fire Suppression Assistance Grant. The plan must designate the State agency that will be responsible for the administration of the program and ensure compliance with the law and regulation applicable to (FSA) grants and ensure the administrative plan is incorporated into the State Emergency Plan.

Affected Public: State, local or tribal government.

Frequency of Response: On occasion.

Estimated Total Annual Burden Hours: 110 hours.

Information collection	Respondents per year	Hour burden per response	Burden hours per year
FEMA-Statement Agreement	27	5 minutes	2.25
Standard Form 90–58	27	1 hour	27
Standard Form 424	27	1 hour	27
FEMA Form 90–91	27	30 minutes	13.5
Standard Form 270 or Letter of Credit	27	30 minutes	13.5
State Administrative Plan	27	1 hour	27
Estimated Total	27	4.0833 hours	110.25

Estimated Cost. $1,654-cost is estimated at $15.00 per respondent × 27 respondents × 4.0833 hour burden per response.

COMMENTS: Written comments are solicited to: (a) Evaluate whether the proposed data collection is necessary for the proper performance of the agency, including whether the information shall have practical utility; (b) evaluate the accuracy of the agency's estimate of the burden of the proposed collection of information, including the validity of the methodology and assumptions used; (c) enhance the quality, utility, and clarity of the information to be collected; and (d) minimize the burden of the collection of information on those who are to respond, including through the use of appropriate automated, electronic, mechanical, or other technological collection techniques or other forms of information technology, e.g., permitting electronic submission of responses. Comments should be received within 60 days of the date of this notice.

ADDRESSES: Interested persons should submit written comments to Muriel B. Anderson, FEMA Information Collections Officer, Federal Emergency Management Agency, 500 C Street, SW, Room 316, Washington, DC 20472. Telephone number (202) 646–2625. FAX number (202) 646–3524. Email address muriel.anderson@fema.gov.

FOR FURTHER INFORMATION CONTACT: Contact Sherry Savoy at (202) 646–2667 for additional information. Contact Ms. Anderson at (202) 646–2625 for copies of the proposed collection of information.

Dated: March 26, 1999.

Reginald Trujillo,

Director, Program Services Division, Operations Support Directorate.

[FR Doc. 99–8465 Filed 4–5–99; 8:45 am]

BILLING CODE 6718–01–P

FEDERAL EMERGENCY MANAGEMENT AGENCY

Agency Information Collection Activities: Proposed Collection; Comment Request

ACTION: Notice and request for comments.

SUMMARY: The Federal Emergency Management Agency, as part of its continuing effort to reduce paperwork and respondent burden, invites the general public and other Federal agencies to take this opportunity to comment on proposed revised information collections. In accordance with the Paperwork Reduction Act of 1995 (44 U.S.C. 3506(c)(2)(A)), this notice seeks comments concerning the Elevation Certificate and the Floodproofing Certificate. The certificates are required by the NFIP to certify the elevations of buildings, so that the policy can be properly rated. It also provides documentation to verify the community's enforcement of building ordinances, which is important to the NFIP mitigation and floodplain management activities.

SUPPLEMENTARY INFORMATION. The NFIP is authorized by Public Law 90–448 (1968) and expanded by Public Law 93–234 (1973). The National Flood Insurance Act of 1968 requires that the Federal Emergency Management Agency (FEMA) provide flood insurance at full actuarial rates reflecting the complete flood risk to structures built or substantially improved on or after the effective date, for the initial Flood Insurance Rate Map (FIRM) for the community, or after December 31, 1974, whichever is later, so that the risks associated with buildings in flood-prone areas are borne by those located in such areas and not by the taxpayers at large. In accordance with Public Law 93–234, the purchase of flood insurance is mandatory when Federal or federally related financial assistance is being provided for acquisition or construction of buildings located, or to be located, within FEMA-identified special flood hazard areas of communities that are participating in the NFIP.

The NFIP regulations require the elevation or floodproofing of newly constructed structures in designated special flood hazard areas. As part of the agreement for making flood insurance available in a community, the NFIP requires the community to adopt a floodplain management ordinance containing certain minimum requirements intended to reduce future flood losses. One such requirement is that the community obtain the elevation of the lowest floor (including basement) of all new and substantially improved

structures, and maintain a record of all such information. The data may be generated and retained as part of the community's permit issuance and building inspection processes. The Elevation Certificate is one convenient way for a community to comply with this requirement. The Floodproofing Certificate may similarly be used to establish the required record in those instances when floodproofing for non-residential structures is a permitted practice.

In the past several years, FEMA has collected feedback from users of the Elevation Certificate form requesting minor changes and clarifications. These changes include better description of structure being certified; expanding ''Section B—Flood Insurance Rate Map Information'' to include critical map information; improving Instructions Section and simplifying the existing Building Diagrams; and clarifying the certification section to reduce the liability risk on the surveyors and professional engineers.

Collection of Information

Title: Post Construction Elevation Certificate/Floodproofing Certificate.

Type of Information Collection: Revision of a currently approved collection.

OMB Number: 3067–0077.

Form Numbers: FEMA Form 81–31, Elevation Certificate; FEMA Form 81–65, Floodproofing Certificate for Non-Residential Structures.

Abstract: The Elevation Certificate and Floodproofing Certificate are adjuncts to the application for flood insurance. The certificates are required for proper rating of post-Flood Insurance Rate Map (FIRM) structures, which are buildings constructed after publication of the FIRM, for flood insurance in Special Flood Hazard Areas. In addition, the Elevation Certificate is needed for pre-FIRM structures being rated under post-FIRM flood insurance rules. The certificates provide community officials and others, with standardized documents that are readily needed.

The certificates are supplied to insurance agents, community officials, surveyors, engineers, architects, and NFIP policyholders/applicants. The community officials or other professionals provide the elevation data required to document conformance with floodplain management regulations and for the applicants so that actuarial insurance rates can be charged. The elevation data is transmitted to the NFIP by the insurance applicant or agent with the appropriate NFIP policy forms.

The data is also used to assist FEMA in measuring the effectiveness of the NFIP regulations in eliminating or decreasing damage caused by flooding and the appropriateness of the NFIP premium charges for insuring property against the flood hazard.

Affected Public: Individuals and households, Businesses or other for-profit, Not-for-profit institutions, Farms, and State, local or tribal governments.

Estimated Total Annual Burden Hours: 166,362.

FEMA forms	Number of respondents (A)	Hours per response (B)	Annual burden hours (A×B)
81–31	73,000	2.25	164,250
81–65	650	3.25	2,112
Total	73,650	.....	166,362

Estimated Cost: The average cost is estimated to be a fee of $125–$200 charged to the applicant by the private sector professional completing the Elevation or Floodproofing Certificates. Total annual costs could range from $9,206,250 to $14,730,000 (i.e., 73,650 respondents × $125 per respondent = $9,206,250 to 73,650 respondents × $200 per respondent = $14,730,000.) Although the average is estimated to range from $125 to $200 per certificate, the actual cost for a given certificate may vary by region and location. In many cases, the Certificates will be available at no cost as a normal product of the community's construction and local permitting processes.

The cost to the Federal government for developing/revising the Elevation Certificate and Floodproofing Certificate is estimated to total $50,000. There is no independent dollar cost to the Federal government to develop, process, analyze and maintain this information since it is submitted by the applicant for flood insurance, along with the applicant's application.

COMMENTS: Written comments are solicited to (a) evaluate whether the proposed data collection is necessary for the proper performance of the agency, including whether the information shall have practical utility; (b) evaluate the accuracy of the agency's estimate of the burden of the proposed collection of information, including the validity of the methodology and assumptions used; (c) enhance the quality, utility, and clarity of the information to be collected; and (d) minimize the burden of the collection of information on those who are to respond, including through the use of appropriate automated, electronic, mechanical, or other technological collection techniques or other forms of information technology; e.g., permitting electronic submission of responses. Comments should be received within 60 days of the date of this notice.

ADDRESSES: Interested persons should submit written comments to Muriel B. Anderson, FEMA Information Collections Officer, Federal Emergency Management Agency, 500 C Street, SW, Room 316, Washington, DC 20472. Telephone number (202) 646–2625. FAX number (202) 646–3524 or email muriel.anderson@fema.gov.

FOR FURTHER INFORMATION CONTACT: Contact Jhun de la Cruz, Insurance Examiner, Federal Insurance Administration, (202) 646–2650 for additional information. Contact Ms. Anderson at (202) 646–2625 or email muriel.anderson@fema.gov for copies of the proposed collection of information.

Dated: March 26, 1999.

Reginald Trujillo,

Director, Program Services Division, Operations Support Directorate.

[FR Doc. 99–8466 Filed 4–5–99; 8:45 am]

BILLING CODE 6718–01–P

FEDERAL EMERGENCY MANAGEMENT AGENCY

Agency Information Collection Activities: Submission for OMB Review; Comment Request

ACTION: Notice and request for comments.

SUMMARY: The Federal Emergency Management Agency is submitting a request for review and approval of an expired information collection. The request is submitted under the emergency processing procedures in Office of Management and Budget OMB)

regulation 5 CFR 1320.13. FEMA is requesting that this information collection be approved by April 12, 1999, for use through October 1999.

FEMA plans to follow this emergency request with a request for a 3-year approval. The request will be processed under OMB's normal clearance procedures in accordance with the provisions of OMB regulation 5 CFR 1320.10. To help us with the timely processing of the emergency and normal clearance submissions to OMB, FEMA invites the general public to comment on the proposed collection of information. This notice and request for comments is in accordance with the provisions of the Paperwork Reduction Act of 1995 (44 U.S.C. 3506(c)(2)(A)). It also seeks comments concerning the information collections outlined in 44 CFR Part 61, as it pertains to application for National Flood Insurance Program (NFIP) insurance.

SUPPLEMENTARY INFORMATION. The National Flood Insurance Program (NFIP) is authorized by Public Law 90–448 (1968) and expanded by Public Law 93–234 (1973). The National Flood Insurance Act of 1968 requires that the Federal Emergency Management Agency (FEMA) provided flood insurance at full actuarial rates reflecting the complete flood risk to structures built or substantially improved on or after the effective date for the initial Flood Insurance Rate Map (FIRM) for the community, or after December 31, 1974, whichever is later, so that the risks associated with buildings in flood-prone areas are borne by those located in such areas and not by the taxpayers at large. In accordance with Public Law 93–234, the purchase of flood insurance is mandatory when Federal or federally related financial assistance is being provided for acquisition or construction of buildings located, or to be located, within FEMA-identified special flood hazard areas of communities that are participating in the NFIP.

Collection of Information.

Title: National Flood Insurance Program Policy Forms.

Type of Information Collection: Reinstatement, with change, of a previously approved collection for which approval has expired.

OMB Number: 3067–0022.

Forms: FEMA Form 81–16, Flood Insurance Application—used to obtain building and/or content coverage for dwellings and general property. Also used to apply for a Condo Master Policy, which provides flood insurance coverage on a single policy for all residential condo units in condominium building.

FEMA Form 81–17, Cancellation/Nullification Request—used for cancellation or nullification of a NFIP policy.

FEMA Form 81–18, General Change Endorsement—used to amend existing policy data shown on the policy Declaration Page.

Request for Policy Processing and Renewal Information Letter (RPPRI Letter)—requests additional or corrected information from the producer when an Application, Endorsement, or Renewal cannot be processed because of missing or incorrect? Upon receipt by the NFIP of the additional or corrected information, the Application, Endorsement, or Renewal is processed.

FEMA Form 81–25, V-Zone Risk Factor Rating—provides certified information concerning the building site, the building support system and other construction details, related to the building's resistance to wind and wave action. The information is used to determine the risk's eligibility for lower flood insurance rates.

FEMA Form 81–67, Preferred Risk Application—a simplified application used to obtain flood insurance coverage for risk's located in B, C and X zones (zones designated as being moderately to minimally at risk from flooding) at lower premiums.

Renewal Premium Notice—advises that the policy is about to expire and informs the payor of the premium required, for the coverage option selected, that must be submitted to renew the policy.

Abstract: In order to provide for the availability of policies for flood insurance, policies are marketed through the facilities of licensed insurance agents or brokers in the various States. Applications from agents or brokers are forwarded to a servicing company designated as fiscal agent by FIA. Upon receipt and examination of the application and required premium, the servicing company issues the appropriate Federal flood insurance policy.

Affected Public: Individuals or households; Business or other for-profit; Not-for-profit institutions; Farms; Federal Government; State, Local or Tribal Government.

Estimated Total Annual Burden Hours: 31,718 hours.

FEMA NFIP policy form	Number of responses	Per form burden hours (in mins.)	Total burden hours
81–16 Application and 81–67 Preferred Risk Application*	36,100	12	7,220
81–17 Cancellation	10,800	7.5	1,350
81–18 Endorsement	96,100	9	14,415
RPPRI Letters (to obtain missing information required for applications, endorsements, and renewals)	*Because this format is used to obtain information requested but missing on, and required to process, applications, endorsements and renewals, its burden hours are not counted separately, but are included in the burden hour totals for those forms.*		
81–25 V-Zone Risk Factor Rating Form	10	15	3
Renewal Premium Notice	174,600	3	8,730
Total	317,610		31,718

*The Preferred Risk Applications and the regular Flood Insurance Applications are now processed and recorded together. There is now break down available to separate the burden for each application.

Estimated Total Costs: A $50 expense constant and a $30 policy fee are charged to the policyholder for the issuance of a new policy or the renewal of an existing policy in order to meet the operating expenses of the NFIP. (The amount of the expense constant and/or the policy fee are subject to adjustment as needed to meet the actual cost of the program.) The annual estimated cost to respondents is $25,408,800.

The projected Operating Expenses (not including claims and claim adjustment expenses) of the NFIP are estimated at approximately $6,000,000 annually.

COMMENTS: Written comments are solicited to (a) evaluate whether the proposed data collection is necessary for the proper performance of the agency, including whether the information shall have practical utility; (b) evaluate the accuracy of the agency's estimate of the burden of the proposed collection of information, including the validity of the methodology and assumptions used; (c) evaluate the accuracy of the estimated costs to respondents to provide the information to the agency; (d) enhance the quality, utility, and clarity of the information to be collected; and (e) minimize the burden of the collection of information on those who are to respond, including through the use of appropriate automated, electronic, mechanical, or other technological collection techniques or other forms of information technology, e.g., permitting electronic submission of responses. Comments should be received within 30 days of the date of this notice.

ADDRESSES: Interested persons should submit written comments to the Office of Management and Budget, Office of Information and Regulatory Affairs, ATTN: Desk Officer for FEMA, 725 17th Street, NW, Room 10102, Washington, DC 20503.

FOR FURTHER INFORMATION CONTACT: Contact Donald R. Beaton, Jr., Chief Underwriter, Federal Insurance Administration at (202) 646–3442 for additional information. Contact Muriel B. Anderson, FEMA Information Collections Officer at (202) 646–2625 or email muriel.anderson@fema.gov for copies of the proposed collection of information.

Dated: March 29, 1999.

Reginald Trujillo,

Director, Program Services Division, Operations Support Directorate.

[FR Doc. 99–8467 Filed 4–5–99; 8:45 am]

BILLING CODE 6718–01–P

FEDERAL EMERGENCY MANAGEMENT AGENCY

Open Meeting, Technical Mapping Advisory Council

AGENCY: Federal Emergency Management Agency (FEMA).

ACTION: Notice of teleconference meeting.

SUMMARY: In accordance with § 10(a)(2) of the Federal Advisory Committee Act, 5 U.S.C. App. 1, the Federal Emergency Management Agency gives notice that the following meeting will be held:

NAME: Technical Mapping Advisory Council.

DATE OF MEETING: April 8, 1999.

PLACE: The FEMA Conference Operator in Washington, DC will initiate the teleconference. Individuals interested in participating should call 1–800–320–4330 at the time of the teleconference. Callers will be prompted for the conference code, #15, and then connected through to the teleconference.

TIME: 2:00 p.m. to 4:00 p.m., EST.

Proposed Agenda

1. Call to order.
2. Announcements.
3. Action on minutes from March 1999 meeting.
4. Discuss agenda for May 1999 meeting.
5. Adjournment.

STATUS: This meeting is open to the public.

FOR FURTHER INFORMATION CONTACT: Michael K. Buckley, P.E., Federal Emergency Management Agency, 500 C Street SW., room 421, Washington, DC 20472, telephone (202) 646–2756 or by facsimile at (202) 646–4596.

SUPPLEMENTARY INFORMATION: Minutes of the meeting will be prepared and will be available upon request 30 days after they have been approved by the next Technical Mapping Advisory Council meeting in May 1999.

Dated: March 31, 1999.

Michael J. Armstrong,

Associate Director for Mitigation.

[FR Doc. 99–8464 Filed 4–5–99; 8:45 am]

BILLING CODE 6718–04–P

FEDERAL MARITIME COMMISSION

Ocean Freight Forwarder License Applicants

Notice is hereby given that the following applicants have filed with the Federal Maritime Commission applications for licenses as ocean freight forwarders pursuant to section 19 of the Shipping Act of 1984 (46 U.S.C. app. 1718 and 46 CFR 510).

Persons knowing of any reason why any of the following applicants should not receive a license are requested to contact the Office of Freight Forwarders, Federal Maritime Commission, Washington, DC 20573.

Palmetto Freight Forwarding Corp., 9695 NW 79 Avenue, Bay #6, Hialeah Gardens, FL 33016,

Officers: Eduardo Pichardo, President, Marben Pichardo, Vice President

Dated: March 31, 1999.

Bryant L. VanBrakle,

Secretary.

[FR Doc. 99–8362 Filed 4–5–99; 8:45 am]

BILLING CODE 6730–01–M

FEDERAL RESERVE SYSTEM

Formations of, Acquisitions by, and Mergers of Bank Holding Companies

The companies listed in this notice have applied to the Board for approval, pursuant to the Bank Holding Company Act of 1956 (12 U.S.C. 1841 *et seq.*) (BHC Act), Regulation Y (12 CFR Part 225), and all other applicable statutes and regulations to become a bank holding company and/or to acquire the assets or the ownership of, control of, or the power to vote shares of a bank or bank holding company and all of the banks and nonbanking companies owned by the bank holding company, including the companies listed below.

The applications listed below, as well as other related filings required by the Board, are available for immediate inspection at the Federal Reserve Bank indicated. The application also will be available for inspection at the offices of the Board of Governors. Interested persons may express their views in writing on the standards enumerated in the BHC Act (12 U.S.C. 1842(c)). If the proposal also involves the acquisition of a nonbanking company, the review also includes whether the acquisition of the nonbanking company complies with the standards in section 4 of the BHC Act. Unless otherwise noted, nonbanking activities will be conducted throughout the United States.

Unless otherwise noted, comments regarding each of these applications must be received at the Reserve Bank indicated or the offices of the Board of Governors not later than April 30, 1999.

A. Federal Reserve Bank of Atlanta (Lois Berthaume, Vice President) 104 Marietta Street, N.W., Atlanta, Georgia 30303-2713:

1. Manufacturers Bankshares, Inc., Tampa, Florida; to become a bank holding company by acquiring 100 percent of the voting shares of Manufacturers Bank of Florida, Tampa, Florida.

Board of Governors of the Federal Reserve System, March 31, 1999.

Robert deV. Frierson,

Associate Secretary of the Board.

[FR Doc. 99–8396 Filed 4–5–99; 8:45 am]

BILLING CODE 6210–01–F

FEDERAL RESERVE SYSTEM

Notice of Proposals to Engage in Permissible Nonbanking Activities or to Acquire Companies that are Engaged in Permissible Nonbanking Activities

The companies listed in this notice have given notice under section 4 of the Bank Holding Company Act (12 U.S.C. 1843) (BHC Act) and Regulation Y, (12 CFR Part 225) to engage *de novo*, or to acquire or control voting securities or assets of a company, including the companies listed below, that engages either directly or through a subsidiary or other company, in a nonbanking activity that is listed in § 225.28 of Regulation Y (12 CFR 225.28) or that the Board has determined by Order to be closely related to banking and permissible for bank holding companies. Unless otherwise noted, these activities will be conducted throughout the United States.

Each notice is available for inspection at the Federal Reserve Bank indicated. The notice also will be available for inspection at the offices of the Board of Governors. Interested persons may express their views in writing on the question whether the proposal complies with the standards of section 4 of the BHC Act.

Unless otherwise noted, comments regarding the applications must be received at the Reserve Bank indicated or the offices of the Board of Governors not later than April 20, 1999.

A. Federal Reserve Bank of Atlanta (Lois Berthaume, Vice President) 104 Marietta Street, N.W., Atlanta, Georgia 30303-2713:

1. Trustmark Corporation, Jackson, Mississippi; to engage *de novo* through its subsidiary, Trustmark Bankcard, National Association, Columbus, Georgia (in organization), in making, acquiring, brokering, or servicing loans or other extensions of credit, pursuant to § 225.28(b)(1) of Regulation Y.

Board of Governors of the Federal Reserve System, March 31, 1999.

Robert deV. Frierson,

Associate Secretary of the Board.

[FR Doc. 99–8397 Filed 4–5–99; 8:45 am]

BILLING CODE 6210–01–F

DEPARTMENT OF HEALTH AND HUMAN SERVICES

Centers for Disease Control and Prevention

[Program Announcement 99043]

Notice of Availability of Funds; Infrastructure Development Initiatives Related to Oral Disease Prevention and Oral Health Promotion

A. Purpose

The Centers for Disease Control and Prevention (CDC) announces the availability of fiscal year (FY) 1999 funds for a cooperative agreement program for Infrastructure Development Initiatives Related to Oral Disease Prevention and Oral Health Promotion. This program addresses the Healthy People 2000 priority areas Oral Health, Tobacco, Educational and Community-Based Programs, and Diabetes and Chronic Disabling Conditions.

The purpose of the program is to develop initiatives related to oral disease prevention and related chronic disease and health promotion capacity; and, to coordinate the dissemination of comprehensive oral disease information and health promotion programmatic expertise among state and local agencies, public and private sector organizations, and health care professionals in the United States.

The purpose of this program includes conducting projects that:

1. Promote the development of leadership and infrastructure to establish sustainable oral health programs at the state and local levels.
2. Advance tobacco control programs, especially smokeless tobacco.
3. Advance school oral health education and targeted oral disease and oral injury prevention efforts (e.g. athletic mouth guards).
4. Develop and carry out oral health education and disease prevention programs for high-risk adults.

B. Eligible Applicants

Assistance will be provided only to a dental health organization that is a 501(c)(3) private, nonprofit organization. Eligible applicants must have established working relationships with public advocacy coalitions and national, state and local organizations.

Limited competition is justified under this program announcement because of the need for a directed and concentrated focus in the effective dissemination of programs and information related to oral health. The coordination and implementation of a national oral health education program strategy requires organizations that have the capacity and experience to influence the professional actions of their constituencies; have the capacity to identify, assess, and advocate for implementing effective oral health programs; and can build the capacity of coalitions and state and local health and education agencies.

The applicant organization must include evidence of its nonprofit status with the application. Any of the following is acceptable evidence.

1. A reference to the organization's listing in the Internal Revenue Service's (IRS) most recent list of tax-exempt organizations described in section 501(c)(3) of the IRS Code.
2. A copy of a currently valid Internal Revenue Service Tax exemption certificate.
3. A statement from a state taxing body, State Attorney General, or other appropriate state official certifying that the applicant organization has a nonprofit status and that none of the net earnings accrue to any private shareholders or individuals.
4. A certified copy of the organization's certificate of incorporation or similar document if it clearly establishes the nonprofit status of the organization.

Note: Effective January 1, 1996, Public Law 104–65 states that an organization described in section 501(c)(4) of the Internal Revenue Code of 1986 that engages in lobbying activities is not eligible to receive federal funds constituting an award, grant, cooperative agreement, contract, loan, or any other form.

C. Availability of Funds

Approximately $70,000 is available in FY 1999 to fund one award. It is expected that the award will begin on or about August 15, 1999, and will be made for a 12-month budget period within a project period of up to 5 years. Funding estimates may change.

Continuation awards within the project period will be made on the basis of satisfactory progress and the availability of funds.

Use of Funds

Funded programs may include activities related to risk factors for oral diseases or chronic health conditions that are effected by oral diseases or that may influence oral diseases. Examples of related factors or conditions include: tobacco use prevention, proper nutrition, diabetes control and the prevention of oral complications of diabetes, and cardiovascular disease.

D. Program Requirements

In conducting activities to achieve the purpose of this program, the grantee

will be responsible for the activities under 1. below, and CDC will be responsible for the activities under 2. below:

1. Recipient Activities

a. Collaborate with state and local coalitions to develop and expand activities to improve and strengthen oral health infrastructure.

b. Identify geographic areas for the implementation and evaluation of oral health education, that includes tobacco.

c. Initiate and conduct the development and project planning, implementation, monitoring, and evaluation of oral health education and health promotion projects and service programs.

d. Provide expert guidance and consultation to State and local coalitions and organizations during program development and operation and development of evaluation methodologies.

e. Monitor and evaluate program performance.

f. Analyze program-related data and, on a periodic basis, share data and program performance information through appropriate channels (conferences, reports, publications, etc.).

g. Coordinate activities with other relevant agencies, organizations, and individuals to facilitate the development, implementation, and evaluation of oral disease prevention and health promotion programs, either as stand-alone programs or integrated within broader chronic disease prevention and health promotion programs. For example, program activities may be implemented in the following areas:

(1) Working with the National Spit Tobacco Education Program, to expand tobacco prevention and control activities beyond baseball to include blue collar workers, military, and other professional sports that include professional wrestling. Special attention may also be given to minority populations within the aforementioned subgroups. The recipient should develop and carry out activities that deglamorize tobacco use and expand partnerships with agencies and organizations that could support the implementation of tobacco control and prevention.

(2) Develop and expand oral health education and prevention activities that could be implemented in schools and expand partnerships with agencies and organizations that can support the implementation of school oral health programs for children and adolescents.

(3) Develop a mechanism for targeting oral health promotion messages to adults, especially high-risk adults, such as those with diabetes. Public education about oral cancer, its causes, prevention, detection, and treatment may be undertaken. Other examples may include assessment of the oral health of special populations, such as Special Olympic adult athletes or the homeless, and establishing and expanding referral programs.

2. CDC Activities

a. Participate in planning, implementing, and evaluating strategies and programs.

b. Assist in the analysis and interpretation of the evaluation phase of projects or programs.

c. Provide programmatic consultation and guidance in support of the program.

d. Provide continuing updates on scientific and operational developments in the areas of oral disease prevention and control, related risk factors, and impacts on other chronic health conditions.

e. Assist in the planning and implementation of linkages with local or State agencies.

f. Assist in the technological and methodological dissemination of successful prevention and intervention models among targeted groups such as State and local health departments, community-based organizations, and other health professionals.

E. Application Content

Applicants should use the information in the Program Requirements, Other Requirements, and Evaluation Criteria sections to develop the application content. The application will be evaluated on the criteria listed, so it is important to follow them in laying out the program plan. The narrative should be no more than 25 double-spaced pages, excluding appendixes printed on one side, with one inch margins, and unreduced font. The application should contain:

1. Statement of Need

Identify and describe the nature and extent of each problem for which assistance is requested and provide a brief description of each programmatic plan and activity for addressing these problems.

2. Capability and Experience

a. Describe experience in developing and implementing nationally recognized community-based oral disease prevention and health promotion initiatives.

b. Describe experience in carrying out community-based oral disease prevention and capacity development activities in State and local sites.

c. Describe the ability to leverage significant electronic and print media coverage around critical oral health education and promotion activities.

d. Demonstrate the ability to conduct oral health capacity and infrastructure development activities that have specific relevance to proposed project objectives.

e. Describe current and past collaboration and operational strategies with other organizations to accomplish program goals and disseminate information related to oral disease and control through a broad-based public advocacy coalition.

f. Describe current or past unique opportunities or innovations employed to further oral health programs through the use of unusual talent, resources, populations, or programmatic situations that are not readily accessed by other organizations and provides augmentation of existing CDC resources. For example, relationships may be with organizations such as Major League Baseball, the Major League Baseball Association, and Special Olympics.

g. Describe ability to begin implementing the projects outlined in this application request within a short time period (3–6 months).

3. Objectives

Establish and submit long- (5 year) and short-term (1 year) objectives for each programmatic activity proposed. Objectives must be specific, measurable, time phased, and realistic.

4. Operational Plan

Submit an operational plan that addresses achieving each of the objectives established. Provide a concise description of each component or major activity and how it will be carried out. The plan must identify and establish a timeline for the completion of each component or major activity.

5. Evaluation Plan

Submit a quantitative plan for monitoring progress toward achieving each of the stated objectives.

6. Program Management

Describe the need, functions, and qualifications for each program personnel requested.

a. Describe the proposed staffing for the project and provide job descriptions for existing and proposed positions.

b. Submit curriculum vitae (limited to 2 pages per person) for each professional staff member named in the proposal.

c. Provide documentation demonstrating presence of affiliate organizations or programs in at least 7

of the 10 Health and Human Services Regional Offices regions in the United States.

d. Describe the volunteer network distributed around the country and their expertise and experience related directly to proposed activities.

7. Budget

Submit a detailed budget and line-item justification that is consistent with the purpose of the program and the proposed project activities.

An original and two copies of the application are required. Pages should be numbered and a complete index to the application and its appendixes included. Begin each separate section on a new page. The original and each copy of the application must be submitted unstapled, unbound, and typed on 8½″ by 11″ paper, with at least 1″ margins, headings and footers, and printed on one side only.

F. Submission and Deadline

Application

Submit the original and two copies of PHS–5161–1 (OMB Number 0937–0189). Forms are in the application kit. On or before June 15, 1999, submit the application to:

Locke Thompson, Grants Management Specialist, Grants Management Branch, Procurement and Grants Office, Announcement 99043, Centers for Disease Control and Prevention, Room 3000, 2920 Brandywine Road, Mail Stop E–18, Atlanta, GA 30341–4146.

Deadline: Applications shall be considered as meeting the deadline if they are either:

(a) Received on or before the deadline date; or

(b) Sent on or before the deadline date and received in time for orderly processing. (Applicants must request a legibly dated U.S. Postal Service postmark or obtain a legibly dated receipt from a commercial carrier or U.S. Postal Service. Private metered postmarks shall not be acceptable as proof of timely mailing.)

Late Applications: Applications which do not meet the criteria in (a) or (b) above are considered late applications, will not be considered, and will be returned to the applicant.

G. Evaluation Criteria

Each application will be evaluated individually against the following criteria by an independent review group appointed by CDC.

1. Needs Statement (15 Points) The extent to which the applicant identifies specific needs related to the purposes of the program.

2. Capability and Experience (15 Points) The extent to which the organization has the capability and experience to develop national community-based oral disease prevention and health promotion programs and to develop State and local infrastructure necessary for their success. The extent to which the proposed network of affiliate organizations, programs, coalitions, and volunteer groups possess capacity to perform projects of a national scope.

3. Objectives (10 Points)

The degree to which short-and long-term objectives are specific, time-phased, measurable, and realistic.

4. Operational Plan (25 Points)

The adequacy of the applicant's plan to carry out the proposed activities.

5. Evaluation Plan (15 Points)

The extent to which the evaluation plan provides methods of monitoring progress toward meeting project objectives.

6. Program Management (20 Points)

The extent to which proposed staff meet requirements and possess the experience and capacity to perform the project.

The applicant must provide evidence of the number and type of field staff that are currently active in at least seven of the 10 PHS regions within the United States.

7. Budget (Not Scored)

The extent to which the budget is reasonable and consistent with the purpose and objectives of the program.

H. Other Requirements

Technical Reporting Requirements

Provide CDC with an original plus two copies of

1. semiannual progress reports;

2. financial status report, no more than 90 days after the end of the budget period;

3. final financial and performance reports, no more than 90 days after the end of the project period.

Send all reports to: Locke Thompson, Grants Management Specialist, Grants, Management Branch, Procurement and Grants Office, Centers for Disease Control and Prevention, Room 3000, 2920 Brandywine Road, Mail Stop E–18, Atlanta, GA 30341–4146

The following additional requirements are applicable to this program and are incorporated herein by reference. For a complete description of each, see Attachment 1 in the application kit.

AR–9 Paperwork Reduction Act Requirements
AR–10 Smoke-Free Workplace Requirements
AR–11 Healthy People 2000
AR–12 Lobbying Restrictions
AR–15 Proof of Nonprofit Status

I. Authority and Catalog of Federal Domestic Assistance Number

This program is authorized under the Public Health Service Act, Sections 317(k)(2)[42 U.S.C. 247b (k)(2)], as amended. The Catalog of Federal Domestic Assistance number is 93.283.

J. Where to Obtain Additional Information

To receive additional written information and to request an application kit, call 1–888-GRANTS4 (1–888 472–6874). You will be asked to leave your name and address and will be instructed to identify the Announcement number of interest.

If you have questions after reviewing the contents of all the documents, business management technical assistance may be obtained from: Locke Thompson, Grants Management Specialist, Grants Management Branch, Procurement and Grants Office, Announcement 99043, Centers for Disease Control and Prevention, Room 3000, 2920 Brandywine Road, Mail Stop E–18, Atlanta, GA 30341–4146, Telephone (770) 488–2749, E-mail: lxt1@cdc.gov.

For program technical assistance, contact: Scott M. Presson, Program Director, Division of Oral Health, National Center for Chronic Disease Prevention, and Health Promotion, Centers for Disease Control and Prevention 4770 Buford Hwy, NE., Mail Stop F–10, Atlanta, GA 30341–3724, Telephone, (770)488–6056, E-mail: skp4@cdc.gov.

See also the CDC home page on the Internet: http://www.cdc.gov.

Dated: March 30, 1999.

Jane M. Sparks,

Acting Director, Procurement and Grants Office, Centers for Disease Control and Prevention (CDC).

[FR Doc. 99–8174 Filed 4–5–99; 8:45 am]

BILLING CODE 4163–18–P

DEPARTMENT OF HEALTH AND HUMAN SERVICES

Centers for Disease Control and Prevention

Advisory Committee for Energy-Related Epidemiologic Research and Subcommittee for Community Affairs: Meetings

In accordance with section 10(a)(2) of the Federal Advisory Committee Act (Pub. L. 92–463), the Centers for Disease

Control and Prevention (CDC) announces the following committee meetings.

Name: Advisory Committee for Energy-Related Epidemiologic Research (ACERER).

Times and Dates: 8:30 a.m.–5 p.m., April 20, 1999; 8:30 a.m.–5 p.m., April 21, 1999.

Place: Hyatt Regency Knoxville, 500 Hill Avenue SE, Knoxville, Tennessee 37915, telephone 423/637–1234, fax 423/522–5911.

Status: Open to the public, limited only by the space available. The meeting room accommodates approximately 100 people.

Purpose: This committee is charged with providing advice and recommendations to the Secretary, HHS; the Assistant Secretary for Health; the Director, CDC; and the Administrator, Agency for Toxic Substances and Disease Registry (ATSDR), on establishment of a research agenda and the conduct of a research program pertaining to energy-related analytic epidemiologic studies.

Matters to be Discussed: Agenda items will include update presentations from the National Center for Environmental Health (NCEH), the National Institute for Occupational Safety and Health (NIOSH), and ATSDR on the progress of current studies and proposed research agendas; a presentation of the historical overview of ACERER; a review of current NCEH and NIOSH research agendas; a discussion of prospective studies of clean-up workers—Government and community; an explanation of how the Subcommittee for Community Affairs (SCA) relates to the full ACERER; a discussion of the continuing issues related to the National Cancer Institute (NCI) report; a discussion of research agenda formulation; and a report on community health centers.

Agenda items are subject to change as priorities dictate.

Contact Person for More Information: Michael J. Sage, Executive Secretary, ACERER, and Acting Deputy Director, Division of Environmental Hazards and Health Effects (DEHHE), NCEH, CDC 4770 Buford Highway, NE, (F28), Atlanta, Georgia 30341–3724, telephone 770/488–7044.

Name: Subcommittee for Community Affairs (SCA), ACERER

Time and Date: 8:30 p.m.–5 p.m., April 22, 1999.

Place: Oak Ridge Mall, 333 Main Street, Oak Ridge, Tennessee 37830, telephone 423/482–2008, fax 423/481–3429.

Status: Open to the public, limited only by the space available. The meeting room accommodates approximately 100 people.

Purpose: This subcommittee advises ACERER on matters related to community needs.

Matters to be Discussed: Agenda items will include update presentations from NCEH, NIOSH, and ATSDR on the progress of current studies; a discussion of subcommittee recommendations and public involvement activities. There will also be an update on the SCA work group progress.

Agenda items are subject to change as priorities dictate.

Contact Person for More Information: Steven A. Adams, Executive Secretary, SCA, ACERER, Radiation Studies Branch, DEHHE, NCEH, CDC, 4770 Buford Highway, NE, (F–28), Atlanta, Georgia 30341–3724, telephone 770/488–7040, fax 770/488–7044.

The Director, Management Analysis and Services Office has been delegated the authority to sign Federal Register notices pertaining to announcements of meetings and other committee management activities for both the CDC and ATSDR.

Dated: March 25, 1999.

Carolyn J. Russell,

Director, Management Analysis and Services Office, Centers for Disease Control and Prevention (CDC).

[FR Doc. 99–8411 Filed 4–5–99; 8:45 am]

BILLING CODE 4163–18–P

DEPARTMENT OF HEALTH AND HUMAN SERVICES

Centers for Disease Control and Prevention

The National Institute for Occupational Safety and Health (NIOSH) of the Centers for Disease Control and Prevention (CDC) Announces the Following Meeting

Name: Study Protocol Peer Review Meeting: Lung Cancer Among Workers Exposed to External Ionizing Radiation.

Time and Date: 9 a.m.–3:30 p.m., May 24, 1999.

Place: NIOSH, Hamilton Laboratories, Hamilton Auditorium, 5555 Ridge Avenue, Cincinnati, Ohio 45213.

Status: Open to the public, limited by the space available. The meeting room accommodates approximately 50 people.

Purpose: The purpose of this meeting is to obtain expert advice regarding technical and scientific aspects of the study ''Multi-Site Case-Control Study of Lung Cancer and External Ionizing Radiation'' being conducted at NIOSH. Participants on the Peer Review Panel will review the study protocol and advise on the conduct of the study. Viewpoints and suggestions from industry, labor, academia, other government agencies and the public are invited.

Contact Person for More Information: Larry J. Elliott, MSPH, C.I.H., Health-Related Energy Research Branch, Division of Surveillance, Hazard Evaluations, and Field Studies, NIOSH, CDC, 4676 Columbia Parkway, M/S R–44, Cincinnati, Ohio 45226, telephone 513/841–4400.

The Director, Management Analysis and Services office has been delegated the authority to sign **Federal Register** notices pertaining to announcements of meetings and other committee management activities, for both the Centers for Disease Control and Prevention and the Agency for Toxic Substances and Disease Registry.

Dated: March 25, 1999.

Carolyn J. Russell,

Director, Management Analysis and Services Office, Centers for Disease Control and Prevention (CDC).

[FR Doc. 99–8404 Filed 4–5–99; 8:45 am]

BILLING CODE 4160–18–P

DEPARTMENT OF HEALTH AND HUMAN SERVICES

Centers for Disease Control and Prevention

Interim Polio Vaccine Information Materials; New Vaccine Information Materials for Hepatitis B, Haemophilus Influenzae Type b (Hib), and Varicella (Chickenpox) Vaccines, and Revised Vaccine Information Materials for Measles, Mumps, Rubella (MMR) Vaccines; Notices

Correction

Notices published in the **Federal Register** on February 23, 1999 [64 FR 9040] beginning on page 9041 make the following corrections:

Polio

On page 9041, 2nd column, under #2: The sentence ''Both vaccines work well.'' should be moved to appear after ''Oral Polio Vaccine Drops by Mouth'' It should read:

IPV
Inactivated Polio Vaccine
A shot
OPV
Oral Polio Vaccine
Drops by mouth
Both vaccines work well.

Page 9041, 3rd column, under #4, last paragraph, 3rd line from end: replace ''helps to protect'' with ''protects''.

Page 9041, 3rd column, heading for #5: should read ''Some Children Should Get Only Shots and Some Should Get Only Drops'' (no period in the middle).

Page 9044, List of Telephone Numbers
Massachusetts: should be (617) 983–6800
Nevada: should be (775) 684–5900
New Hampshire: should be (603) 271–4482
New Jersey: should be (609) 588–7512
Washington state: should be (360) 664–8688

Hepatitis B

Page 9045, 1st column, under #5 near bottom: ''Mild P.problems'' should be ''Mild Problems''

Haemophilus Influenzae Type B

Page 9045, 3rd column, under #1, under bullet Death: ''and nearly 1,000

died.'' should read ''and nearly 1,000 people died.''

On page 9046, 1st column, heading for #5: Should read ''What if there is a moderate or severe reaction?'' (not problem)

All other information and requirements of the notice remain the same.

Dated: March 31, 1999.

Joseph R. Carter,

Acting Associate Director for Management and Operations, Centers for Disease Control and Prevention (CDC).

[FR Doc. 99–8410 Filed 4–5–99; 8:45 am]

BILLING CODE 4163–18–P

DEPARTMENT OF HEALTH AND HUMAN SERVICES

Food and Drug Administration

[Docket No. 99F–0720]

Arakawa Chemical Industries, Ltd.; Filing of Food Additive Petition

AGENCY: Food and Drug Administration, HHS.

ACTION: Notice.

SUMMARY: The Food and Drug Administration (FDA) is announcing that Arakawa Chemical Industries, Ltd. has filed a petition proposing that the food additive regulations be amended to expand the safe use of hydrogenated aromatic petroleum hydrocarbon resins for use in blends with polymers intended for contact with food.

DATES: Written comments on the petitioner's environmental assessment by May 6, 1999.

ADDRESSES: Submit written comments to the Dockets Management Branch (HFA–305), Food and Drug Administration, 5630 Fishers Lane, rm. 1061, Rockville, MD 20852.

FOR FURTHER INFORMATION CONTACT: Ellen M. Waldron, Center for Food Safety and Applied Nutrition (HFS–215), Food and Drug Administration, 200 C St. SW., Washington, DC 20204, 202–418–3089.

SUPPLEMENTARY INFORMATION: Under the Federal Food, Drug, and Cosmetic Act (sec. 409(b)(5) (21 U.S.C. 348(b)(5))), notice is given that a food additive petition (FAP 9B4653) has been filed by Arakawa Chemical Industries, Ltd., c/o Keller and Heckman, LLP, 1001 G St. NW., suite 500 West, Washington, DC 20001. The petition proposes to amend the food additive regulations in 21 CFR part 178—Indirect Food Additives: Adjuvants, Production Aids, and Sanitizers and in § 177.1520 *Olefin polymers* (21 CFR 177.1520) to expand the safe use of hydrogenated aromatic petroleum hydrocarbon resins, for use in blends with polymers intended for contact with food.

The potential environmental impact of this action is being reviewed. To encourage public participation consistent with regulations issued under the National Environmental Policy Act (40 CFR 1501.4(b)), the agency is placing the environmental assessment submitted with the petition that is the subject of this notice on public display at the Dockets Management Branch (address above) for public review and comment. Interested persons may, on or before May 6, 1999, submit to the Dockets Management Branch (address above) written comments. Two copies of any comments are to be submitted, except that individuals may submit one copy. Comments are to be identified with the docket number found in brackets in the heading of this document. Received comments may be seen in the office above between 9 a.m. and 4 p.m., Monday through Friday. FDA will also place on public display any amendments to, or comments on, the petitioner's environmental assessment without further announcement in the **Federal Register**. If, based on its review, the agency finds that an environmental impact statement is not required and this petition results in a regulation, the notice of availability of the agency's finding of no significant impact and the evidence supporting that finding will be published with the regulation in the **Federal Register** in accordance with 21 CFR 25.40(c).

Dated: March 22, 1999.

Laura M. Tarantino,

Acting Director, Office of Premarket Approval, Center for Food Safety and Applied Nutrition.

[FR Doc. 99–8441 Filed 4–5–99; 8:45 am]

BILLING CODE 4160–01–F

DEPARTMENT OF HEALTH AND HUMAN SERVICES

Food and Drug Administration

[Docket No. 99F–0719]

The Procter & Gamble Co.; Filing of Food Additive Petition

AGENCY: Food and Drug Administration, HHS.

ACTION: Notice.

SUMMARY: The Food and Drug Administration (FDA) is announcing that The Procter & Gamble Co. has filed a petition proposing that the food additive regulations be amended to provide for the safe use of olestra in place of fats and oils in prepackaged, unpopped popcorn kernels that are ready-to-heat.

DATES: Written comments on the petitioner's environmental assessment by May 6, 1999.

ADDRESSES: Submit written comments to the Dockets Management Branch (HFA–305), Food and Drug Administration, 5630 Fishers Lane, rm. 1061, Rockville, MD 20852.

FOR FURTHER INFORMATION CONTACT: Mary D. Ditto, Center for Food Safety and Applied Nutrition (HFS–206), Food and Drug Administration, 200 C St. SW., Washington, DC 20204, 202–418–3090.

SUPPLEMENTARY INFORMATION: Under the Federal Food, Drug, and Cosmetic Act (sec. 409(b)(5) (21 U.S.C. 348(b)(5))), notice is given that a food additive petition (FAP 9A4652) has been filed by The Procter & Gamble Co., Winton Hill Technical Center, 6071 Center Hill Ave., Cincinnati, OH 45224. The petition proposes to amend the food additive regulations in § 172.867 *Olestra* (21 CFR 172.867) to provide for the safe use of olestra in place of fats and oils in prepackaged, unpopped popcorn kernels that are ready-to-heat.

The potential environmental impact of this action is being reviewed. To encourage public participation consistent with regulations issued under the National Environmental Policy Act (40 CFR 1501.4(b)), the agency is placing the environmental assessment submitted with the petition that is the subject of this notice on public display at the Dockets Management Branch (address above) for public review and comment. Interested persons may, on or before May 6, 1999, submit to the Dockets Management Branch (address above) written comments. Two copies of any comments are to be submitted, except that individuals may submit one copy. Comments are to be identified with the docket number found in brackets in the heading of this document. Received comments may be seen in the office above between 9 a.m. and 4 p.m., Monday through Friday. FDA will also place on public display any amendments to, or comments on, the petitioner's environmental assessment without further announcement in the **Federal Register**. If, based on its review, the agency finds that an environmental impact statement is not required and this petition results in a regulation, the notice of availability of the agency's finding of no significant impact and the evidence supporting that finding will be published with the regulation in the **Federal Register** in accordance with 21 CFR 25.40(c).

Dated: March 22, 1999.

Laura M. Tarantino,

Acting Director, Office of Premarket Approval, Center for Food Safety and Applied Nutrition.

[FR Doc. 99–8442 Filed 4–5–99; 8:45 am]

BILLING CODE 4160–01–F

DEPARTMENT OF HEALTH AND HUMAN SERVICES

Food and Drug Administration

[Docket No. 98P–1121]

Grated Parmesan Cheese Deviating From Identity Standard; Temporary Permit for Market Testing

AGENCY: Food and Drug Administration, HHS.

ACTION: Notice.

SUMMARY: The Food and Drug Administration (FDA) is announcing that a temporary permit has been issued to Kraft Foods, Inc., to market test a product designated as ''100% Grated Parmesan Cheese'' that deviates from the U.S. standards of identity for parmesan cheese and grated cheeses. The purpose of the temporary permit is to allow the applicant to measure consumer acceptance of the product, identify mass production problems, and assess commercial feasibility, in support of a petition to amend the standard of identity for parmesan cheese.

DATES: This permit is effective for 15 months, beginning on the date the food is introduced or caused to be introduced into interstate commerce, but not later than July 6, 1999.

FOR FURTHER INFORMATION CONTACT: Loretta A. Carey, Center for Food Safety and Applied Nutrition (HFS–158), Food and Drug Administration, 200 C St. SW., Washington, DC 20204, 202–205–5099.

SUPPLEMENTARY INFORMATION: In accordance with 21 CFR 130.17 concerning temporary permits to facilitate market testing of foods deviating from the requirements of the standards of identity promulgated under section 401 of the Federal Food, Drug, and Cosmetic Act (21 U.S.C. 341), FDA is giving notice that a temporary permit has been issued to Kraft Foods, Inc., Three Lakes Dr., Northfield, IL 60093.

The permit covers 86 million pounds of interstate marketing tests products identified as ''grated parmesan cheese'' that deviate from the U.S. standard of identity for parmesan cheese (21 CFR 133.165) and grated cheeses (21 CFR 133.146) in that the product is formulated by using a different enzyme technology that fully cures the cheese in 6 months rather than 10 months. The test product meets all the requirements of the standards with the exception of this deviation. Because test preferences vary by area, along with social and environmental differences, the purpose of this permit is to test the product throughout the United States.

Under this temporary permit, the parmesan cheese will be test marketed as grated parmesan cheese. The test product will bear the name ''100% Grated Parmesan Cheese.''

This permit provides for the temporary marketing of 86 million pounds of grated parmesan cheese in retail containers of various sizes. The test product will be manufactured at Kraft Foods, Inc., 10800 Avenue 184, Tulare, CA 93274. The product will then be shipped to Kraft Foods Inc., 1007 Town Line Rd., Wausau, WI 54401, where it is aged, grated, and packaged for distribution. The product will be distributed throughout the United States.

The information panel of the labels will bear nutrition labeling in accordance with 21 CFR 101.9. Each of the ingredients used in the food must be declared on the labels as required by the applicable sections of 21 CFR part 101.

This permit is effective for 15 months, beginning on the date the food is introduced or caused to be introduced into interstate commerce, but not later than July 6, 1999.

Dated: March 29, 1999.

Kenneth J. Falci,

Acting Director, Office of Food Labeling, Center for Food Safety and Applied Nutrition.

[FR Doc. 99–8440 Filed 4–5–99; 8:45 am]

BILLING CODE 4160–01–F

DEPARTMENT OF HEALTH AND HUMAN SERVICES

Food and Drug Administration

[Docket No. 96G–0096]

The Flax Council of Canada; Withdrawal of GRAS Affirmation Petition

AGENCY: Food and Drug Administration, HHS.

ACTION: Notice.

SUMMARY: The Food and Drug Administration (FDA) is announcing the withdrawal, without prejudice to a future filing, of a petition (GRASP 5G0416) proposing to affirm that the use of low linolenic acid flaxseed oil is generally recognized as safe (GRAS) as a food oil.

FOR FURTHER INFORMATION CONTACT: Lawrence J. Lin, Center for Food Safety and Applied Nutrition (HFS–215), Food and Drug Administration, 200 C St. SW., Washington, DC 20204, 202–418–3103.

SUPPLEMENTARY INFORMATION: In a notice published in the **Federal Register** of March 27, 1996 (61 FR 13505), FDA announced that a petition (GRASP 5G0416) had been filed by the Flax Council of Canada, 465–167 Lombard Ave., Winnipeg, MB R3B 0T6, Canada. This petition proposed that the use of low linolenic acid flaxseed oil as a food oil be affirmed as GRAS.

The Flax Council of Canada has now withdrawn the petition without prejudice to a future filing (21 CFR 171.7).

Dated: March 17, 1999.

Eugene C. Coleman,

Acting Director, Office of Premarket Approval, Center for Food Safety and Applied Nutrition.

[FR Doc. 99–8443 Filed 4–5–99; 8:45 am]

BILLING CODE 4160–01–F

DEPARTMENT OF HEALTH AND HUMAN SERVICES

Food and Drug Administration

[Docket No. 99D–0557]

''Guidance for Industry: Public Health Issues Posed by the Use of Nonhuman Primate Xenografts in Humans;'' Availability

AGENCY: Food and Drug Administration, HHS.

ACTION: Notice.

SUMMARY: The Food and Drug Administration (FDA) is announcing the availability of a guidance document entitled ''Guidance for Industry: Public Health Issues Posed by the Use of Nonhuman Primate Xenografts in Humans.'' The guidance document is being issued in response to public comments and recent interest among clinical investigators in using nonhuman primate xenografts in the near future. The document is intended to provide guidance on nonhuman primate xenotransplantation in humans.

DATES: Written comments may be submitted at any time, however, comments should be submitted by July 6, 1999, to ensure adequate consideration in preparation of a revised document, if warranted. The agency is soliciting public comment but is implementing this guidance document immediately because of the public health concerns related to the use of live cells, tissues, and organs from nonhuman primate xenografts in humans.

ADDRESSES: Submit written requests for single copies of the guidance document entitled ''Guidance for Industry: Public Health Issues Posed by the Use of Nonhuman Primate Xenografts in Humans'' to the Office of Communication, Training, and Manufacturers Assistance (HFM–40), Center for Biologics Evaluation and Research (CBER), Food and Drug Administration, 1401 Rockville Pike, Rockville, MD 20852–1448. Send one self-addressed adhesive label to assist that office in processing your requests. The guidance document may also be obtained by mail by calling the CBER Voice Information System at 1–800–835–4709 or 301–827–1800, or by fax by calling the FAX Information System at 1–888–CBER–FAX or 301–827–3844. See the **SUPPLEMENTARY INFORMATION** section for electronic access to the guidance document.

Submit written comments on the guidance document to the Dockets Management Branch (HFA–305), Food and Drug Administration, 5630 Fishers Lane, rm. 1061, Rockville, MD 20852.

FOR FURTHER INFORMATION CONTACT: Valerie A. Butler, Center for Biologics Evaluation and Research (HFM–17), Food and Drug Administration, 1401 Rockville Pike, Rockville, MD 20852–1448, 301–827–6210.

SUPPLEMENTARY INFORMATION:

I. Background

FDA is announcing the availability of a guidance document entitled ''Guidance for Industry: Public Health Issues Posed by the Use of Nonhuman Primate Xenografts in Humans.'' The document provides guidance to industry concerning: (1) The potential public health risks posed by nonhuman primate xenografts; (2) the need for further scientific research and evaluation of these risks, particularly infectious agents; and (3) the need for public discussion concerning these issues.

Concerns have arisen in the last few years about the potential infectious disease and public health risks associated with xenotransplantation, particularly nonhuman primate xenotransplantation. For the purpose of this guidance document, xenotransplantation is defined as any procedure that involves the use of live cells, tissues, or organs from a nonhuman animal source transplanted or implanted into a human, or used for ex vivo contact with human body fluids, cells, tissues, or organs that are subsequently given to a human recipient. In addition, defined for the purpose of this document, xenografts include live cells, tissues, or organs from a nonhuman animal source used for xenotransplantation.

In developing the guidance, FDA considered numerous sources of information, including concerns raised in public comments to the ''Draft Public Health Service (PHS) Guideline on Infectious Disease Issues in Xenotransplantation'' (61 FR 49920, September 23, 1996) and concerns voiced by the scientific and lay community at the public workshops on xenotransplantation entitled ''Cross–Species Infectivity and Pathogenesis'' held on July 21 and 22, 1997, and ''Developing U.S. Public Health Service Policy in Xenotransplantation'' held on January 21 and 22, 1998, sponsored by PHS.

The approach outlined in the guidance document has been accepted by the other PHS agencies including the National Institutes of Health, the Centers for Disease Control and Prevention, and the Health Resources and Services Administration, as well as the Department of Health and Human Services Working Group on Xenotransplantation. The agency is aware that other species of animals have been used and are proposed as future sources of xenografts and may pose infectious disease risks. The public health issues raised by xenotransplantation, regardless of source animal species, will continue to receive scientific evaluation and discussion by appropriate Federal agencies and advisory committees.

The guidance document represents the agency's current thinking on the potential public health risks posed by the use of nonhuman primate xenografts in humans, and the consequent need for further scientific evaluation and public discussion of this issue. It does not create or confer any rights for or on any person and does not operate to bind FDA or the public. An alternative approach may be used if such approach satisfies the requirement of the applicable statute, regulations, or both. As with other guidance documents, FDA does not intend this document to be all-inclusive and cautions that not all information may be applicable to all situations. The document is intended to provide information and does not set forth requirements.

II. Comments

The agency notes that measures taken during the production of some nonhuman primate xenografts products, such as extensive preclinical xenotransplant product testing for infectious agents, genetic engineering, enclosure of the product in a semipermeable barrier, and/or the use of well-characterized cell lines which have been handled in a manner to avoid the introduction of new pathogens, could potentially provide greater control of infectious disease risks. The agency specifically solicits comments on the potential for such measures, alone or in combination, to substantially reduce the risks posed by nonhuman primate xenotransplantation. The agency is soliciting public comment but is implementing this guidance document immediately because of the public health concerns related to the use of live cells, tissues and organs from nonhuman primate xenografts in humans.

Interested persons may submit to the Dockets Management Branch (address above) written comments regarding this guidance document. Written comments may be submitted at any time, however, comments should be submitted by July 6, 1999, to ensure adequate consideration in preparation of a revised document, if warranted. Two copies of any comments are to be submitted, except individuals may submit one copy. Comments should be identified with the docket number found in the brackets in the heading of this document. A copy of the guidance document and received comments are available for public examination in the Dockets Management Branch between 9 a.m. and 4 p.m., Monday through Friday.

III. Electronic Access

Persons with access to the Internet may obtain the document using the World Wide Web (WWW). For WWW access, connect to CBER at ''http://www.fda.gov/cber/guidelines.htm''.

Dated: March 30, 1999.

William K. Hubbard,

Acting Deputy Commissioner for Policy.

[FR Doc. 99–8439 Filed 4–5–99; 8:45 am]

BILLING CODE 4160–01–F

DEPARTMENT OF HOUSING AND URBAN DEVELOPMENT

[Docket No. FR–4442–N–09]

Notice Of Proposed Information Collection for Public Comment

AGENCY: Office of the Assistant Secretary for Policy Development and Research, HUD.

ACTION: Notice.

SUMMARY: The proposed information collection requirement described below will be submitted to the Office of Management and Budget (OMB) for

review, as required by the Paperwork Reduction Act. The Department is soliciting public comments on the subject proposal.

DATES: Comments are due June 7, 1999.

ADDRESSES: Interested persons are invited to submit comments regarding this proposal. Comments should refer to the proposal by name and/or OMB Control Number and should be sent to: Reports Liaison Officer, Office of Policy Development & Research, Department of Housing and Urban Development, 451–7th Street, SW, Room 8226, Washington, DC 20410–6000.

FOR FURTHER INFORMATION CONTACT: Laurent V. Hodes or Robert W. Gray, Office of Policy Development and Research, Department of Housing and Urban Development, 451 7th St., SW, Room 8154, Washington, DC 20410–6000, telephone 202–708–5537 extension 5736 or 5732. (This is not a toll-free number.) A copy of the proposed forms and other available documents to be submitted to OMB may be obtained from Mr. Hodes or Mr. Gray.

SUPPLEMENTARY INFORMATION: The Department will submit the proposed information collection to OMB for review, as required by the Paperwork Reduction Act of 1995 (44 U.S.C. Chapter 35, as amended).

This notice is soliciting comments from members of the public and affected agencies concerning the proposed collection of information to: (1) Evaluate whether the proposed collection of information is necessary for the proper performance of the functions of the agency, including whether the information will have practical utility; (2) Evaluate the accuracy of the agency's estimate of the burden of the proposed collection of information; (3) Enhance the quality, utility, and clarity of the information to be collected; and (4) Minimize the burden of the collection of information on those who are to respond, including through use of appropriate automated collection techniques or other forms of information technology, e.g., permitting electronic submission of responses.

This Notice also lists the following information:

Title of Proposal: Reinstatement, ''Customer-Survey of Households Living in Federally Assisted Units,'' OMB Control Number: 2528–0170, Expired 04/30/98.

Description of the Need for the Information and Proposed Use:

HUD recently developed and tested a cost-effective mail survey instrument for assessing resident satisfaction with, and rating of, housing units assisted through HUD programs. This survey, which elicits renters' ratings of their housing, provided high response rates and high levels of agreement with independent condition ratings by professional inspectors. HUD plans to implement this survey as an ongoing tool to assess customer ratings of housing assisted through the Section 8 Certificate and Voucher programs. For limited evaluative or comparative purposes, HUD may also use this survey to assess resident ratings of other Federal housing assistance programs.

This survey will provide feedback to help local housing agencies improve their Section 8 programs, and will help HUD to focus its monitoring and technical assistance resources where program performance most needs improvement. It will also provide HUD's policy, budget, and program managers with improved measures for tracking national housing conditions over time.

Members of the affected public: Households receiving assistance from the Section 8 Certificate or Voucher Programs.

Estimation of the total number of hours needed to prepare the information collection including number of respondents, frequency of response, and hours of response: Information will be collected by an annual mail survey of 267,000 of the 1.4 million households who are assisted through the Section 8 Certificate and Voucher programs. The survey will take approximately 15 minutes to complete for an annual total of 66,750 hours of respondent burden. Because the survey will be administered to a sample of households, and because of turnover in the Section 8 programs, most households will not be asked to complete the survey two years in a row.

Status of the proposed information collection: The original information collection was suspended at the termination of HUD's pilot testing. This proposed reinstatement is pending submission to the Office of Management and Budget (OMB) for review and clearance.

Authority: Sec. 3506 of the Paperwork Reduction Act of 1995, 44 U.S.C. Chapter 35, as amended.

Dated: March 29, 1999.

Lawrence L. Thompson,

General Deputy Assistant Secretary for Policy Development and Research.

[FR Doc. 99–8399 Filed 4–5–99; 8:45 am]

BILLING CODE 4210–62–M

DEPARTMENT OF THE INTERIOR

Fish and Wildlife Service

Receipt of an Application for an Incidental Take Permit for Construction on a Single-Family Lot, in Volusia County, FL

AGENCY: Fish and Wildlife Service, Interior.

ACTION: Notice.

SUMMARY: Linda B. Walters (Applicant), is seeking an incidental take permit (ITP) from the Fish and Wildlife Service (Service), pursuant to section 10(a)(1)(B) of the Endangered Species Act of 1973 (Act), as amended. The ITP would authorize incidental take of the Florida scrub-jay (*Aphelocoma coerulescens*) and the eastern indigo snake (*Drymarchon corais couperi*), both threatened species, on a single family lot for a period of twenty (20) years. The proposed taking is incidental to land clearing and other activities associated with the construction of a single family home on a .685-acre lot in Volusia County, Florida (Project). Surveys on the Project site indicate that one family of Florida scrub-jays occupies the Project site. No eastern indigo snakes have been reported on the property; however, the Applicant has requested that the eastern indigo snake be included in the ITP based on the chance that this species could occur on the project site. A description of the mitigation and minimization measures outlined the Applicant's Habitat Conservation Plan (HCP) to address the effects of the Project to the protected species is as described further in the **SUPPLEMENTARY INFORMATION** section below.

Further, the Service has determined that the Applicant's HCP qualifies as a ''low-effect'' HCP as defined by the Service's Habitat Conservation Planning Handbook (November 1996). The Service has further determined that approval of the HCP qualifies as a categorical exclusion under the National Environmental Policy Act (NEPA), as provided by the Department of Interior Manual (516 DM 2, Appendix 1 and 516 DM 6, Appendix 1).

Copies of the Applicant's HCP may be obtained by making a request to the Regional Office (see **ADDRESSES**). Requests must be in writing to be processed. This notice is provided pursuant to Section 10 of the Act and NEPA regulations (40 CFR 1506.6).

The Service specifically requests information, views, opinions from the public via this Notice, including information regarding the adequacy of

the HCP as measured against the Service's ITP issuance criteria found in 50 CFR Parts 13 and 17.

DATES: Written comments on the application and HCP should be sent to the Service's Regional Office (see **ADDRESSES**) and should be received on or before May 6, 1999.

ADDRESSES: Persons wishing to review the HCP may obtain a copy by writing the Service's Southeast Regional Office, Atlanta, Georgia. Documents will also be available for public inspection by appointment during normal business hours at the Regional Office, 1875 Century Boulevard, Suite 200, Atlanta, Georgia 30345 (Attn: Endangered Species Permits), or Field Supervisor, U.S. Fish and Wildlife Service, 6620 South Point Drive, South, Suite 310, Jacksonville, Florida 32216–0912. Written data or comments should be submitted to the Regional Office. Requests for the documentation must be in writing to be processed. Comments must be submitted in writing to be processed. Please reference permit number TE008789–0 in such comments, or in requests of the documents discussed herein.

FOR FURTHER INFORMATION CONTACT: Mr. Rick G. Gooch, Regional Permit Coordinator, (see **ADDRESSES** above), telephone: 404/679–7110, facsimile: 404/679–7081.

SUPPLEMENTARY INFORMATION: Aphelocoma coerulescens is geographically isolated from other subspecies of scrub-jays found in Mexico and the Western United States. The Florida scrub-jay is found almost exclusively in peninsular Florida and is restricted to scrub habitat. The total estimated population is between 7,000 and 11,000 individuals. Due to habitat loss and degradation throughout the State of Florida, it has been estimated that the Florida scrub-jay population has been reduced by at least half in the last 100 years. Surveys have indicated that one family of Florida scrub-jays inhabit the Project site. Construction of the Project's infrastructure, commercial construction and construction of the individual home sites will likely result in death of, or injury to, Aphelocoma coerulescens incidental to the carrying out of these otherwise lawful activities. Habitat alteration associated with property development will reduce the availability of feeding, shelter, and nesting habitat.

Section 9 of the Act, and implementing regulations, prohibits taking the Florida scrub-jay and eastern indigo snake. Taking, in part, is defined as an activity that kills, injures, harms, or harasses a listed endangered or threatened species. Section 10(a)(1)(B) of the Act provides an exemption, under certain circumstances, to the Section 9 prohibition if the taking is incidental to, and not the purpose of otherwise lawful activities.

Observations by Service biologists documented the presence of one family of Florida scrub-jays and use of suitable habitat on the applicant's property. The .685 acres of occupied habitat on the site is very overgrown due to fire suppression and a lack of any kind of management. The surrounding area is intensely developed with only scattered fragments of scrub habitat remaining. No evidence of eastern indigo snakes were found on the property; however, the applicant is requesting to be protected under an incidental take provision since this wide ranging species potentially may use the site. Initial construction of a single family home would sufficiently modify and cause impacts to occupied Florida scrub-jay habitat on the project site, as to meet the definition of ''take'' in the Act.

The HCP describes measures the Applicant will take to avoid and mitigate such taking resulting from the Project. To minimize impacts, the Applicant will ensure clearing of vegetation within 150 feet of active nests will not take place during the nesting season for Florida scrub-jays (March 1 through July 1). Appendix C of the habitat conservation plan (HCP) details the avoidance measures that the Applicant has agreed to implement to reduce potential impacts to any eastern indigo snakes which may be found on the project site. To mitigate for the up to .685 acres of occupied habitat that would be eliminated on-site, the applicant will contribute $8631.00 to the National Fish and Wildlife Foundation Fund for the conservation and management of the Florida scrub-jay. This money will be used, along with other funds received from Section (a)(1)(B) permits, to purchase scrub-jay habitat in Volusia County, Florida. This amount is based on replacement at a rate of 2:1 (replaced: lost), provides a $1,000 per acre management endowment for perpetual management, and includes a five percent fee for the administration of the National Fish and Wildlife Foundation account. Once purchased, the land will be transferred to a third party land management organization along with the $1,000 per acre management endowment for management into perpetuity. This will be accomplished through the use of a conservation easement, specifying that the land be left undeveloped and managed into perpetuity. It is believed that ensuring the protection and viability of quality, occupied habitat in a large contiguous preserve is more beneficial to the scrub-jay and indigo snake than any on-site mitigation plan could offer. No mitigation other than the standard protection measures are offered for the eastern indigo snake, although that species would also generally benefit from conservation and management of a large tract of land.

As earlier stated, the Service has determined that the Plan qualifies as a ''low-effect'' HCP as defined by the Service's Habitat Conservation Planning Handbook (November 1996). Low-effect HCPs are those involving: (1) Minor or negligible effects on federally listed and candidate species and their habitats, and (2) minor or negligible effects on other environmental values or resources. The Applicant's HCP qualifies for the following reasons:

1. Approval of the HCP would result in minor or negligible effects on the Florida scrub-jay, eastern indigo snake, and their habitats. The Service does not anticipate significant direct or cumulative effects to the Florida scrub-jay or eastern indigo snake resulting from construction of the Project.

2. Approval of the HCP would not have adverse effects on known unique geographic, historic or cultural sites, or involve unique or unknown environmental risks.

3. Approval of the HCP would not result in any significant adverse effects on public health or safety.

4. The project does not require compliance with Executive Order 11988 (Floodplain Management), Executive Order 11990 (Protection of Wetlands), or the Fish and Wildlife Coordination Act, nor does it threaten to violate a Federal, State, local or tribal law or requirement imposed for the protection of the environment.

5. Approval of the Plan would not establish a precedent for future action or represent a decision in principle about future actions with potentially significant environmental effects.

The Service has therefore determined that approval of the Plan qualifies as a categorical exclusion under the NEPA, as provided by the Department of the Interior Manual (516 DM 2, Appendix 1 and 516 DM 6, Appendix 1). No further NEPA documentation will therefore be prepared.

The Service will evaluate the HCP and comments submitted thereon to determine whether the eastern indigo

snake. The Service will also evaluate whether the issuance of a Section 10(a)(1)(B) ITP complies with Section 7 of the Act by conducting an intra-Service Section 7 consultation. The results of the consultation, in combination with the above findings, will be used in the final analysis to determine whether or not to issue the ITP; the final decision will be made no sooner than 30 days from the date of this notice.

Dated: March 29, 1999.

H. Dale Hall,

Deputy Regional Director.

[FR Doc. 99–8403 Filed 4–5–99; 8:45 am]

BILLING CODE 4310–55–P

DEPARTMENT OF THE INTERIOR

Bureau of Land Management

[CA–610–09–0777–42]

Meeting of the California Desert District Advisory Council

SUMMARY: Notice is hereby given, in accordance with Pub. Ls. 92–463 and 94–579, that the California Desert District Advisory Council to the Bureau of Land Management, U.S. Department of the Interior, will participate in a field tour of the BLM-administered public lands within the West Mojave Management Planning area on Thursday, May 6, 1999 from 8 a.m. to 4 p.m., and meet in formal session on Friday, May 7 from 8 a.m. until noon and 1 p.m. to 5 p.m. and on Saturday, May 8 from 8 a.m. to 12 noon. The Friday and Saturday meetings will be held in the conference room at the Barstow Holiday Inn, located at 1511 East Main Street, Barstow, California.

All Desert District Advisory Council meetings are open to the public. Time for public comment may be made available by the Council Chairman during the presentation of various agenda items, and is scheduled at the beginning of the meeting for topics not on the agenda.

Written comments may be filed in advance of the meeting for the California Desert District Advisory Council, c/o Bureau of Land Management, Public Affairs Office, 6221 Box Springs Boulevard, Riverside, California 92507–0714. Written comments also are accepted at the time of the meeting and, if copies are provided to the recorder, will be incorporated into the minutes.

FOR FURTHER INFORMATION CONTACT: Carole Levitzky at (909) 697–5217 or Doran Sanchez at (909) 697–5220, BLM California Desert District Public Affairs.

Dated: March 31, 1999.

Tim Salt,

District Manager.

[FR Doc. 99–8405 Filed 4–5–99; 8:45 am]

BILLING CODE 4310–40–P

DEPARTMENT OF THE INTERIOR

Bureau of Land Management

[CA–350–1020–00]

Notice of Resource Advisory Council Meeting

AGENCY: Bureau of Land Management, Northeast California Resource Advisory Council, Susanville, California.

ACTION: Notice of meeting.

SUMMARY: Pursuant to the authorities in the Federal Advisory Committees Act (Pub. L. 92–463) and the Federal Land Policy and Management Act (Pub. L. 94–579), the U.S. Bureau of Land Management's Northeast California Resource Advisory Council will meet Thursday and Friday, May 6 and 7, 1999, at the Bureau of Land Management's Eagle Lake Field Office, 2950 Riverside Drive, Susanville, CA.

SUPPLEMENTARY INFORMATION: On Thursday, May 6, the council will convene at 9 a.m. at the Bureau of Land Management's Eagle Lake Field Office, 2950 Riverside Drive, Susanville, CA. At 9:30 a.m., the council will depart for a field tour of the Fort Sage Off Highway Vehicle Area near Doyle, CA. Members of the public are welcome on the tour, but they must provide their own transportation in a high clearance, four-wheel-drive vehicle. The tour will return to Susanville at approximately 5 p.m. On Friday, the council will convene at 8 a.m. at the Eagle Lake Field office for a business meeting.

Agenda items include an update from the BLM California State Office, discussion about the RAC meeting budget for the remainder of the fiscal year, and reports from managers of the BLM Alturas, Eagle Lake and Surprise field offices. The council will discuss off-highway vehicle management issues in each field office, and discuss development of management guidelines for off-highway vehicles. Public comments will be taken at 1 p.m. Depending on the number of persons wishing to speak, a time limit could be established.

FOR FURTHER INFORMATION CONTACT: Jeff Fontana, public affairs officer, at (530) 257–5381.

Linda D. Hansen,

Eagle Lake Field Manager.

[FR Doc. 99–8406 Filed 4–5–99; 8:45 am]

BILLING CODE 4310–40–P

DEPARTMENT OF THE INTERIOR

Bureau of Land Management

[AK–930–1410–00–NPRA; F–85600]

Designation of Additions to Special Areas in National Petroleum Reserve-Alaska; Alaska

AGENCY: Bureau of Land Management, Interior.

ACTION: Notice.

SUMMARY: This notice provides official publication of additions to the Teshekpuk Lake Special Area and the Colville River Special Area located within the National Petroleum Reserve-Alaska (NPR–A). The designation of these additions is pursuant to the Naval Petroleum Reserves Act of 1976, and in accordance with the Record of Decision for the Northeast National Petroleum Reserve-Alaska Final Integrated Activity Plan/Environmental Impact Statement (IAP/EIS).

DATES: April 6, 1999.

FOR FURTHER INFORMATION CONTACT: Gene Terland, BLM Alaska State Office, 907–271–3344 or Michael Kunz, BLM Northern Field Office, 907–474–2302. Mail may be sent to the Bureau of Land Management (930), Alaska State Office, 222 West 7th Avenue, #13, Anchorage, Alaska 99513–7599.

SUPPLEMENTARY INFORMATION: In 1977, to assure protection of significant subsistence, recreational, fish and wildlife, historical and scenic values, the Secretary of the Interior designated the Teshekpuk Lake Special Area and Colville River Special Area, located within the NPR–A.

In 1998, the BLM prepared the IAP/EIS for a 4.6-million-acre area within the NPR–A to determine the appropriate multiple-use management consistent with existing statutory direction which encourages oil and gas leasing while protecting important surface resources and uses. In order to meet these management responsibilities, the BLM recommended the Pik Dunes Land Use Emphasis Area (LUEA) be added to the Teshekpuk Lake Special Area and areas encompassing the Kikiakrorak and Kogosukruk Rivers be added to the Colville River Special Area. On October 7, 1998, the Secretary of the Interior

signed the Record of Decision adopting the management plan and directed the BLM to add the lands to the Teshekpuk Lake and Colville River Special Areas. Therefore, pursuant to section 104(b) of the Naval Petroleum Reserves Productions Act of 1976, 42 U.S.C. 6501 (1994), the following described lands are added to the designated Special Areas:

Umiat Meridian

Teshekpuk Lake Special Area (Pik Dunes LUEA)

T. 10 N., R. 5 W.,
Secs. 2 through 11, inclusive;
Secs. 14 through 23, inclusive;
Secs. 28, 29, and 30.
T. 11 N., R. 5 W.,
Secs. 33, 34, and 35.

Colville River Special Area (Kikiakrorak and Kogosukruk Rivers)

Those areas which are approximately 2 miles on either side of the Kikiakrorak River downstream from T. 2 N., R. 4 W., and 2 miles on either side of the Kogosukruk River and tributaries downstream from T. 2 N., R. 3 W., located within:

Tps. 1 through 7 N., R. 1 E.
Tps. 2 through 8 N., R. 2 E.
Tps. 1 through 5 N., Rs. 1 and 2 W.
Tps. 2, 3, and 4 N., R. 3 W.
Tps. 2, and 3 N., R. 4 W.

Dated: March 30, 1999.

Sally Wisely,

Acting State Director.

[FR Doc. 99–8402 Filed 4–5–99; 8:45 am]

BILLING CODE 4310–JA–P

JUDICIAL CONFERENCE OF THE UNITED STATES

Meeting of the Judicial Conference Advisory Committee on Rules of Evidence

AGENCY: Judicial Conference of the United States Advisory Committee on Rules of Evidence.

ACTION: Notice of open meeting.

SUMMARY: The Advisory Committee on Rules of Evidence will hold a two-day meeting. The meeting will be open to public observation but not participation.

DATES: April 12–13, 1999.

TIME: 8:30 a.m. to 5:00 p.m.

ADDRESSES: Fordham University School of Law, 140 West 62nd Street, Room 430, New York, New York.

FOR FURTHER INFORMATION CONTACT: John K. Rabiej, Chief, Rules Committee Support Office, Administrative Office of the United States Courts, Washington, D.C. 20544, telephone (202) 502–1820.

Dated: April 1, 1999.

John K. Rabiej,

Chief, Rules Committee Support Office.

[FR Doc. 99–8488 Filed 4–5–99; 8:45 am]

BILLING CODE 2210–55–M

JUDICIAL CONFERENCE OF THE UNITED STATES

Meeting of the Judicial Conference Advisory Committee on Rules of Appellate Procedure

AGENCY: Judicial Conference of the United States Advisory Committee on Rules of Appellate Procedure.

ACTION: Notice of open meeting.

SUMMARY: The Advisory Committee on Rules of Appellate Procedure will hold a two-day meeting. The meeting will be open to public observation but not participation.

DATES: April 15–16, 1999.

TIME: 8:30 a.m. to 5:00 p.m.

ADDRESSES: Thurgood Marshall Federal Judiciary Building, Judicial Conference Center, One Columbus Circle, NE, Washington, DC.

FOR FURTHER INFORMATION CONTACT: John K. Rabiej, Chief, Rules Committee Support Office, Administrative Office of the United States Courts, Washington, DC 20544, telephone (202) 502–1820.

Dated: April 1, 1999.

John K. Rabiej,

Chief, Rules Committee Support Office.

[FR Doc. 99–8489 Filed 4–5–99; 8:45 am]

BILLING CODE 2210–55–M

JUDICIAL CONFERENCE OF THE UNITED STATES

Meeting of the Judicial Conference Advisory Committee on Rules of Civil Procedure

AGENCY: Judicial Conference of the United States Advisory Committee on Rules of Civil Procedure.

ACTION: Notice of open meeting.

SUMMARY: The Advisory Committee on Rules of Civil Procedure will hold a two-day meeting. The meeting will be open to public observation but not participation.

DATES: April 19–20, 1999.

TIME: 8:30 a.m. to 5:00 p.m.

ADDRESSES: Salishan Lodge, 7760 Highway 101 North, Gleneden Beach, Oregon.

FOR FURTHER INFORMATION CONTACT: John K. Rabiej, Chief, Rules Committee Support Office, Administrative Office of the United States Courts, Washington, D.C. 20544, telephone (202) 502–1820.

Dated: April 1, 1999.

John K. Rabiej,

Chief, Rules Committee Support Office.

[FR Doc. 99–8490 Filed 4–5–99; 8:45 am]

BILLING CODE 2210–55–M

JUDICIAL CONFERENCE OF THE UNITED STATES

Meeting of the Judicial Conference Advisory Committee on Rules of Criminal Procedure

AGENCY: Judicial Conference of the United States, Advisory Committee on Rules of Criminal Procedure.

ACTION: Notice of open meeting.

SUMMARY: The Advisory Committee on Rules of Criminal Procedure will hold a two-day meeting. The meeting will be open to public observation but not participation.

DATES: April 22–23, 1999.

TIME: 8:30 a.m. to 5:00 p.m.

ADDRESSES: Thurgood Marshall Federal Judiciary Building, Judicial Conference Center, One Columbus Circle, NE, Washington, DC.

FOR FURTHER INFORMATION CONTACT: John K. Rabiej, Chief, Rules Committee Support Office, Administrative Office of the United States Courts, Washington, DC 20544, telephone (202) 502–1820.

Dated: April 1, 1999

John K. Rabiej,

Chief, Rules Committee Support Office

[FR Doc. 99–8491 Filed 4–5–99; 8:45 am]

BILLING CODE 2210–55–M

JUDICIAL CONFERENCE OF THE UNITED STATES

Meeting of the Judicial Conference Committee on Rules of Practice and Procedure

AGENCY: Judicial Conference of the United States, Committee on Rules of Practice and Procedure.

ACTION: Notice of open meeting.

SUMMARY: The Committee on Rules of Practice and Procedure will hold a two-day meeting. The meeting will be open to public observation but not participation.

DATES: June 14–15, 1999.

TIME: 8:30 a.m. to 5:00 p.m.

ADDRESSES: Boston College Law School, 885 Centre Street, Newton Centre, Massachusetts.

FOR FURTHER INFORMATION CONTACT: John K. Rabiej, Chief, Rules Committee

Support Office, Administrative Office of the United States Courts, Washington, DC 20544, telephone (202) 502–1820.

Dated: April 1, 1999.

John K. Rabiej,

Chief, Rules Committee Support Office.

[FR Doc. 99–8492 Filed 4–5–99; 8:45 am]

BILLING CODE 2210–55–M

JUDICIAL CONFERENCE OF THE UNITED STATES

Meeting of the Judicial Conference Advisory Committee on Rules of Criminal Procedure

AGENCY: Judicial Conference of the United States, Advisory Committee on Rules of Criminal Procedure.

ACTION: Notice of open meeting.

SUMMARY: The Advisory Committee on Rules of Criminal Procedure will hold a two-day meeting. The meeting will be open to public observation but not participation.

DATES: June 21–22, 1999.

TIME: 8:30 a.m. to 5:00 p.m.

ADDRESSES: RiverPlace Hotel, 1510 Southwest Harbor Way, Portland, Oregon.

FOR FURTHER INFORMATION CONTACT: John K. Rabiej, Chief, Rules Committee Support Office, Administrative Office of the United States Courts, Washington, D.C. 20544, telephone (202) 502–1820.

Dated: April 1, 1999.

John K. Rabiej,

Chief, Rules Committee Support Office.

[FR Doc. 99–8493 Filed 4–5–99; 8:45 am]

BILLING CODE 2210–55–M

JUDICIAL CONFERENCE OF THE UNITED STATES

Meeting of the Judicial Conference Advisory Committee on Rules of Bankruptcy Procedure

AGENCY: Judicial Conference of the United States, Advisory Committee on Rules of Bankruptcy Procedure.

ACTION: Notice of open meeting.

SUMMARY: The Advisory Committee on Rules of Bankruptcy Procedure will hold a two-day meeting. The meeting will be open to public observation but not participation.

DATES: September 27–28, 1999.

TIME: 8:30 a.m. to 5:00 p.m.

ADDRESS: Jackson Lake Lodge, Highway 89 North, Moran, Wyoming.

FOR FURTHER INFORMATION CONTACT: John K. Rabiej, Chief, Rules Committee Support Office, Administrative Office of the United States Courts, Washington, D.C. 20544, telephone (202) 502–1820.

Dated: April 1, 1999.

John K. Rabiej,

Chief, Rules Committee Support Office.

[FR Doc. 99–8494 Filed 4–5–99; 8:45 am]

BILLING CODE 2210–55–M

DEPARTMENT OF JUSTICE

Notice of Lodging of Consent Decree Pursuant to the Comprehensive Environmental Response, Compensation and Liability Act

In accordance with Departmental policy, 28 CFR 50.7, notice is hereby given that a proposed Consent Decree in *United States and State of Connecticut* v. *A.G. Miller Company, Inc., et al.*, Civ. No. 399–CV–0471 & 0473 (JCH), was lodged on March 16, 1999 with the United States District Court for the District of Connecticut. The United States' complaint seeks to recover, pursuant to the Comprehensive Environmental Response, Compensation, and Liability Act (''CERCLA''), 42 U.S.C. 9601, *et al.*, future response costs to be incurred by EPA at the Old Southington Landfill Superfund Site located in the town of Southington, Connecticut (''Site'').

The proposed Consent Decree embodies an agreement with 119 *de minimis* PRPs at the Site, pursuant to Section 122(g) of CERCLA, 42 U.S.C. 9622(g), to pay $828,831, in aggregate, in settlement of claims for future response costs at the Site and claims for natural resource damages at the Site. Of this total, $814,573 will be paid to the United States and $14,258 will be paid to the Department of the Interior (''DOI''). The monies paid to the United States will be set aside for the purpose of funding future response actions at the Site, including a possible future groundwater remedy. The monies paid to DOI will be set aside to fund a future natural resource damages restoration project in connection with the Site.

The proposed Consent Decree provides the 119 *de minimis* settling defendants with a release for civil liability for EPA's and the State's future CERCLA response costs and natural resource damages at the Site for resources under the trusteeship of the Secretary of the Interior and the Secretary of Commerce, through the National Oceanic and Atmospheric Administration, and under the trusteeship of the State.

The Department of Justice will receive, for a period of thirty (30) days from the date of this publication, comments relating to the proposed Consent Decree.

Comments should be addressed to the Assistant Attorney General for the Environment and Natural Resources Division, Department of Justice, P.O. Box 7611, Ben Franklin Station, Washington, D.C. 20044, and should refer to *United States and State of Connecticut* v. *A.G. Miller Company, Inc., et al.*, DOJ Ref. No. 90–11–2–420/1.

The proposed consent decree may be examined at the Office of the United States Attorney, U.S. Courthouse, 915 Lafayette Blvd., Rm. 309, Bridgeport, CT 06604; the Region I Office of the Environmental Protection Agency, Region I Records Center, 90 Canal Street, Fourth Floor, Boston, MA 02203; and at the Consent Decree Library, 1120 G Street, N.W., Third Floor, Washington, D.C. 20005, (202) 624–0892. A copy of the proposed consent decree may be obtained in person or by mail from the Consent Decree Library, 1120 G Street, Third Floor, N.W., Washington, D.C. 20005. In requesting a copy, please refer to the referenced case and enclose a check in the amount of $35.50 (25 cents per page reproduction costs), payable to the Consent Decree Library.

Joel Gross,

Chief, Environmental Enforcement Section, Environment and Natural Resources Division.

[FR Doc. 99–8458 Filed 4–5–99; 8:45 am]

BILLING CODE 4410–15–M

DEPARTMENT OF JUSTICE

Notice of Consent Judgments Pursuant to the Comprehensive Environmental Response, Compensation and Liability Act

In accordance with Departmental Policy, 28 CFR 50.7, 38 FR 19029, and 42 U.S.C. 9622(d), notice is hereby given that a proposed Consent Decree in *United States* v. *American Board Companies, Inc., C.I. Liquidators of New York, Inc., and Great American Industries, Inc.*, DOJ # 90–11–2–489, Civ No. 99–CV–435 (TJM) was lodged in the United States District Court for the Northern District of New York on March 24, 1999. The Consent Decree resolves the liability of the Settling Defendants under Sections 106 and 107 of the Comprehensive Environmental Response, Compensation and Liability Act (''CERCLA''), 42 U.S.C. 9606 and 9607, relating to the Vestal Water Supply Well 1–1 Superfund Site, located in the town of Vestal, Broom County, New York (the ''Site'').

Under the proposed Consent Decree, C.I. Liquidators of New York, Inc. and Great American Industries, Inc. will pay, jointly and severally, a total of $775,000 in four installment payments to reimburse a portion of EPA's future response costs for response actions at the Site. American Board Companies, Inc. will provide access to its portion of the Site and will comply with certain restrictions on the use of its property. In return for the payments and other consideration, the Settling Defendants will receive covenants not to sue under Sections 106 and 107 of CERCLA for the Site as well as contribution protection.

The Department of Justice will receive, for a period of thirty (30) days from the date of this publication, written comments relating to the proposed Consent Decree. Comments should be addressed to the Assistant Attorney General for the Environment and Natural Resources Division, Department of Justice, Washington, DC 20530, and should refer to *United States* v. *American Board Companies, Inc., C.I. Liquidators of New York, Inc., and Great American Industries, Inc., DOJ* # 90–11–2–489. The proposed Consent Decree may be examined at the Office of the United States Attorney, Northern District of New York, James Foley U.S. Courthouse, 445 Broadway, Room 231, Albany, New York 12207; at the Region II Office of the U.S. Environmental Protection Agency, 290 Broadway, New York, New York 10278; and at the Consent Decree Library, 1120 G Street, NW, 3rd Floor, Washington, DC 20005, (202) 624–0892. Copies of the Consent Decree may be obtained in person or by mail from the Consent Decree Library, 1120 G Street, NW, 3rd Floor, Washington, DC 20005. In requesting a copy, please enclose a check in the amount of $7.00 (25 cents per page reproduction costs) payable to the Consent Decree Library.

Joel M. Gross,

Environmental Enforcement Section, Environment and Natural Resources Division.

[FR Doc. 99–8460 Filed 4–5–99; 8:45 am]

BILLING CODE 4410–15–M

DEPARTMENT OF JUSTICE

Notice of Lodging of Consent Decree Pursuant to the Comprehensive Environmental Response, Compensation and Liability Act

In accordance with Departmental policy, 28 CFR 50.7, and Section 122 of CERCLA, 42 U.S.C. 9622, notice is hereby given that on March 24, 1999, a proposed Consent Decree in *United States* v. *Armco, Inc.* v. *American Home Products Corp. et al.,* Civil Action No: C–2–95–698, was lodged with the United States District Court for the Southern District of Ohio. This consent decree resolves potential claims by the United States against eleven third-party defendants under the Comprehensive Environmental Response, Compensation and Liability Act, 42 U.S.C. 9601 *et seq.,* for recovery response costs incurred or to be incurred by the United States in connection with the Fultz Landfill Superfund Site located near Byesville, Guernsey County, Ohio. Under the proposed consent decree, the third-party defendants will pay the United States a total of $27,979 in reimbursement of past response costs.

The Department of Justice will receive for a period of thirty (30) days from the date of this publication comments relating to the proposed Consent Decree. Comments should be addressed to the Assistant Attorney General of the Environment and Natural Resources Division, Department of Justice, Washington, D.C. 20530, and should refer to *United States* v. *Armco, Inc.,* v. *American Home Products Corp., et al.,* D.J. Ref. 90–11–3–856A.

The proposed Consent Decree may be examined at the Office of the United States Attorney, Southern District of Ohio, 20080 High Street, 4th Floor, Columbus, OH 43215, at the Region 5 Office of the Environmental Protection Agency, 77 West Jackson Street, Chicago, Illinois 60604–3590, and at the Consent Decree Library, 1120 G Street, N.W., 3rd Floor, Washington, D.C. 20005, (202) 624–0892. A copy of the proposed Consent Decree may be obtained in person or by mail from the Consent Decree Library, 1120 G Street, N.W., 3rd Floor, Washington, D.C. 20005. In requesting a copy, please enclose a check in the amount of $7.25 (25 cents per page reproduction cost) payable to the Consent Decree Library.

Joel M. Gross,

Chief, Environmental Enforcement Section, Environment and Natural Resources Division.

[FR Doc. 99–8461 Filed 4–5–99; 8:45 am]

BILLING CODE 4410–15–M

DEPARTMENT OF JUSTICE

Notice of Lodging of Consent Decree Pursuant to the Comprehensive Environmental Response, Compensation, and Liability Act

In accordance with Departmental policy, 28 CFR 50.7, notice is hereby given that a proposed consent decree in *United States* v. *Ben Shemper & Sons, Inc, et al.,* Civil Action No. 94–50385/LAC was lodged on March 12, 1999, with the United States District Court for the Northern District of Florida. In December 1994 pursuant to Section 107 of the Comprehensive Environmental Response, Compensation, and Liability Act (CERCLA), 42 U.S.C. 9607, the United States filed this action to recover response actions at the Sapp Battery Site near Cottondale, Florida. In addition, the complaint contained a claim against defendant, Ben Shemper & Sons, Inc. (Shemper) under Section 106(a) of CERCLA, 42 U.S.C. 9606(a), for failure to comply with EPA's Unilateral Administrative Order directing Shemper to participate in implementing the remedy for soil contamination at the site. The site was contaminated with lead and other heavy metals as the result of battery cracking operations conducted at the site from approximately 1970 to 1980. The consent decree requires Shemper to pay $1,330,000 plus interest over a period of approximately three years.

The Department of Justice will receive, for a period of 30 days from the date of this publication, comments relating to the proposed consent decree. Comments should be addressed to the Assistant Attorney General for the Environment and Natural Resources Division, Department of Justice, Washington, D.C. 20530, and should refer to: *United States* v. *Ben Shemper & Sons, Inc., et al.,* DOJ Ref. # 90–11–2–699E.

The proposed consent decree may be examined at the Office of the United States Attorney, Northern District of Florida, 114 E. Gregory Street, Pensacola, Florida 32501; Office of the U.S. Environmental Protection Agency, Region 4, 61 Forsyth Street, S.W., Atlanta, Georgia 30303; and at the Consent Decree Library, 1120 G Street, N.W., 3rd Floor, Washington D.C. 20005 (202) 624–0892. A copy of the proposed consent decree may be obtained in person or by mail from the Consent Decree Library, 1120 G. Street, N.W., 3rd Floor, Washington, D.C. 20005. In requesting a copy, please refer to the referenced case and enclose a check in the amount of $4.50 (25 cents per page reproduction costs), payable to the Consent Decree Library.

Walker Smith,

Deputy Chief, Environmental Enforcement Section, Environment and Natural Resources Division.

[FR Doc. 99–8457 Filed 4–5–99; 8:45 am]

BILLING CODE 4410–15–M

DEPARTMENT OF JUSTICE

Notice of Lodging of Consent Decree Pursuant to the Comprehensive Environmental Response, Compensation, and Liability Act

Notice is hereby given that a consent decree in *United States* v. *Berks Associates, Inc. et al.*, Civil Action No. 91–4868 (E.D. Pa.) was lodged with the court on March 16, 1999.

The proposed decree resolves claims of the United States against 44 de-minimis parties under Sections 106 and 107 of the Comprehensive Environmental Response, Compensation, and Liability Act, as amended (''CERCLA''), 42 U.S.C. 9606 and 9607, for response costs and actions at the Douglassville Disposal Superfund Site in Berks County, PA. Each of the participating Settling Defendants sent one percent or less of the hazardous wastes found at the Site. The decree obligates the Settling Defendants, collectively, to reimburse to the United States a total of $8.9 million in past costs and anticipated future response costs. Of this amount, $3.2 million represents recovery of past costs and $5.7 million represents recovery of future costs.

The Department of Justice will receive, for a period of thirty (30) days from the date of this publication, comments relating to the proposed consent decree. Comments should be addressed to the Assistant Attorney General for the Environment and Natural Resources Division, Department of Justice, Washington, DC 20530, and should refer to *United States* v. *Berks Associates, Inc. et al.*, Civil Action No. 91–4868. (E.D. Pa.), DOJ Ref. # 90–11–2–303.

The proposed consent decree may be examined at the United States Department of Justice, Environment and Natural Resources Division, Consent Decree Library, 1120 G Street, NW, 4th Floor, Washington, DC 20005, (202) 624–0892. A copy of the proposed consent decree may be obtained in person or by mail from the Consent Decree Library, 1120 G Street, NW, 4th Floor, Washington, DC 20005. In requesting a copy, please refer to the referenced case and enclose a check in the amount of $8.00 (25 cents per page reproduction costs, excluding attachments), payable to the Consent Decree Library.

Joel M. Gross,

Chief, Environmental Enforcement Section, Environment and Natural Resources Division.

[FR Doc. 99–8462 Filed 4–5–99; 8:45 am]

BILLING CODE 4410–15–M

DEPARTMENT OF JUSTICE

Notice of Lodging of Consent Decree Pursuant to the Comprehensive Environmental Response, Compensation, and Liability Act

In accordance with Department policy, 28 CFR 50.7, notice is hereby given that a proposed Consent Decree in *United States and State of Connecticut* v. *Commercial Auto Body, et al.*, Civ. No. 399–CV–0470 & 0472 (JCH), was lodged on March 16, 1999 with the United States District Court for the District of Connecticut. The United States' complaint seeks to recover, pursuant to the Comprehensive Environmental Response, Compensation, and Liability Act (''CERCLA''), 42 U.S.C. 9601, et al., past response costs incurred by EPA at the Old Southington Landfill Superfund Site located in the Town of Southington, Connecticut (''Site'').

The proposed Consent Decree embodies an agreement with six potentially responsible parties (''PRPs'') at the Site to pay $45,537, in aggregate, in settlement of claims for past response costs at the Site. Of this total, $30,000 will be paid to the United States and $15,537 will be paid to two parties who are performing a remedial action at the Site. The monies paid to the two performing parties will be used to partially fund the remedial action being performed by the two performing parties. The proposed Consent Decree provides the six settling defendants with a release for civil liability for EPA's and the State of Connecticut's (''State's'') past CERCLA response costs at the Site.

The Department of Justice will receive, for a period of thirty (30) days from the date of this publication, comments relating to the proposed Consent Decree.

Comments should be addressed to the Assistant Attorney General for the Environment and Natural Resources Division, Department of Justice, P.O. Box 7611, Ben Franklin Station, Washington, DC 20044, and should refer to *United States and State of Connecticut* v. *Commercial Auto Body, et al.*, DOJ Ref. No. 90–11–2–420/2.

The proposed consent decree may be examined at the Office of the United States Attorney, U.S. Courthouse, 915 Lafayette Blvd., Rm. 309, Bridgeport, CT 06604; the Region I Office of the Environmental Protection Agency, Region 1 Records Center, 90 Canal Street, Fourth Floor, Boston, MA 02203; and at the Consent Decree Library, 1120 G Street, NW, Third Floor, Washington, DC 20005, (202) 614–0892. A copy of the proposed consent decree may be obtained in person or by mail from the Consent Decree Library, 1120 G Street, Third Floor, NW, Washington, DC 20005. In requesting a copy, please refer to the referenced case and enclose a check in the amount of $7.00 (25 cents per page reproduction costs), payable to the Consent Decree Library.

Joel Gross,

Chief, Environmental Enforcement Section, Environmental and Natural Resources Division.

[FR Doc. 99–8459 Filed 4–5–99; 8:45 am]

BILLING CODE 4410–15–M

DEPARTMENT OF JUSTICE

Immigration and Naturalization Service

[INS No. 1927–98]

Eligibility Pilot Program Citizen Attestation Employment

AGENCY: Immigration and Naturalization Service, Justice.

ACTION: Notice.

SUMMARY: In April 1999, the Immigration and Naturalization Service (Service) will begin testing the Citizen Attestation Employment Eligibility Pilot Program. On September 15, 1997, the Service published a notice in the **Federal Register** providing the requirements and guidance to employers that might be interested in participating in a pilot program(s) for employment eligibility confirmation. The notice also instructed employers to contact the Service if they elected to participate in the program(s). The pilot programs discussed in that notice were the Basic Pilot, the Citizen Attestation Pilot, and the Machine-Readable Document Pilot. These pilot programs are required by the Illegal Immigration Reform and Immigrant Responsibility Act of 1996 (IIRIRA). Employers in all 50 states were originally invited to submit election forms expressing interest in the Citizen Attestation Pilot Program, but the Service reserved the right to limit the pilot to certain states based on the level of employer interest and on further determinations as to states driver licensing procedures. This notice is to advise employees that the Citizen Attestation Pilot will be offered to all employers in the states of Arizona, Maryland, Massachusetts, Michigan, and Virginia.

DATES: There is no deadline for volunteering to participate in the Citizen Attestation Pilot Program, but interested employers should contact the Service as soon as possible to maximize their opportunity to participate.

Employers in the states listed above who have already submitted a Form I–876, Election Form, to the Service do not have to reapply.

FOR FURTHER INFORMATION CONTACT: John E. Nahan, Immigration and Naturalization Service, SAVE Program, 425 I Street, NW., ULLICO Building, 4th Floor, Washington, DC 20536, telephone (888) 464–4218.

SUPPLEMENTARY INFORMATION:

What Is the Citizen Attestation Pilot Program?

The Citizen Attestation Pilot Program is a free employment confirmation system being conducted by the Service to test a method of providing an effective, nondiscriminatory employment eligibility process, focusing on electronic confirmation. The pilot program involves a verification check of the Service's database to verify the alien number and other information provided by a newly-hired alien employee. Equipment needed for participation in this pilot is a personal computer with a modem. The pilot program can be tested for up to 4 years.

Who May Participate in the Citizen Attestation Pilot Program?

The pilot program is being offered to all employers in the states of Arizona, Maryland, Massachusetts, Michigan, and Virginia. Participation in the pilot will be voluntary on the part of employers, except with regard to the Executive and Legislative Branches of the Federal Government and certain employers found to be in violation of the Immigration and Nationality Act in states where the pilot is being conducted.

How Does an Employer Sign Up for Participation in the Citizen Attestation Pilot Program?

All employers must enter into a Memorandum of Understanding (MOU) with the Service. To obtain the MOU or to request additional information about the Citizen Attestation Pilot Program, you may submit your requests to the Immigration and Naturalization Service by writing to, 425 I Street, NW., ULLICO Building, 4th Floor, Washington, DC 20536, Attention: SAVE Program Branch, or you may fax your request to the SAVE Program at (202) 514–9981, or you may call the SAVE Program toll free at 1–888–464–4218.

Paperwork Reduction Act

The information collection requirement contained in the Memorandum of Understanding has been approved by the Office of Management and Budget (OMB) under the provisions of the Paperwork Reduction Act. The clearance number for this collection is OMB 1115–0228.

Dated: March 30, 1999.

Doris Meissner,

Commissioner, Immigration and Naturalization Service.

[FR Doc. 99–8354 Filed 4–5–99; 8:45 am]

BILLING CODE 4410–10–M

DEPARTMENT OF LABOR

Employment and Training Administration

Notice of Determinations Regarding Eligibility To Apply for Worker Adjustment Assistance and NAFTA Transitional Adjustment Assistance

In accordance with Section 223 of the Trade Act of 1974, as amended, the Department of Labor herein presents summaries of determinations regarding eligibility to apply for trade adjustment assistance for workers (TA–W) issued during the period of February and March, 1999.

In order for an affirmative determination to be made and a certification of eligibility to apply for worker adjustment assistance to be issued, each of the group eligibility requirements of Section 222 of the Act must be met.

(1) That a significant number or proportion of the workers in the workers' firm, or an appropriate subdivision thereof, have become totally or partially separated,

(2) That sales or production, or both, of the firm or subdivision have decreased absolutely, and

(3) That increases of imports of articles like or directly competitive with articles produced by the firm or appropriate subdivision have contributed importantly to the separations, or threat thereof, and to the absolute decline in sales or production.

Negative Determinations for Worker Adjustment Assistance

In each of the following cases the investigation revealed that criterion (3) has not been met. A survey of customers indicated that increased imports did not contribute importantly to worker separations at the firm.

TA–W–34,326; Tube City, Inc., West Mifflin, PA

TA–W–35,380; Sharon Tube Co., Niles, OH

TA–W–35,624; Bar-Sew, Inc., Lehighton, PA

TA–W–35,548; Mill-Rite Farms, Inc., Albany, OR

TA–W–35,467; Pittsburgh Corning Corp., Port Allegany, PA

TA–W–35,191; A & B; Allied Signal Laminate Systems, Pendleton, SC, Franklin, IN and LaCrosse, WI

TA–W–35,592; North American Refractories Co., Womelsdorf, PA

TA–W–35,402; U.S. Steel Group, A Div. Of USX Corp., Fairless Works, Hairless Hills, PA

TA–W–35,450; Braeburn Alloy Steel, Inc., Lower Burrell, PA

TA–W–35,473; Blount, Inc., Forestry & Industrial Equipment Div., Prentice, WI

TA–W–35,483; Computalog USA, Inc., Fort Worth, TX

In the following cases, the investigation revealed that the criteria for eligibility have not been met for the reasons specified.

TA–W–35,287; Hanover Accoesories, Powtucket, RI

TA–W–35,594; Intertek Testing Services, Int'l, Inc., Pasadena, TX

TA–W–35,497; Washington Public Power Supply System, Satsop Site, Elma, WA

TA–W–35,350; General Electric Co., Hickory, NC

TA–W–35,567; Boise Cascade Corp, Research & Development Dept, Portland, OR

TA–W–35,486; Buckeye, Inc., Midland, TX

TA–W–35,598; NANA Management Service & NANNA/Colt Engineering, Anchorage, AK

The workers firm does not produce an article as required for certification under Section 222 of the Trade Act of 1974.

TA–W–35,438; Motorola Ceramic Products, Albuquerque, NM

TA–W–35,258; Habersham Metal Products, Cornelia, GA

TA–W–35,560; Dyna Craft Industries, Inc., Murrysville, PA

TA–W–35,249; Frenesius Medical Care, N.A., Renal Produc Technologies, McAllen, TX

TA–W–35,220; Ametek, US Gauge Div., Sellersville, PA

TA–W–35,271; Essex Group, Inc., Pana, IL

TA–W–35,234; P.D.U. Apparel, Inc., Garfield, NJ

TA–W–275; Motorola, Tempe, AZ

TA–W–35,322; International Paper Corp., Containerboard Div., Gardiner, OR

TA–W–35,133; Johnson Matthey, APG Thermal management Group, Cheney, WA (Including Temporary Workers from Humanix, Volt and CDI, Spokane, WA)

TA–W–35,290; AG-Chem Equipment Co., Inc., Jackson, MN

TA–W–35,499; Kulicke and Soffa Industries, Inc., Willow Grove, PA

TA–W–35,360; Koch Label Co L.L.C., Evansville, IN

Increased imports did not contribute importantly to worker separations at the firm.

TA–W–35,230; Avery Dennison Fasson Roll, North America Div., Quakertown, PA

The investigation revealed that criteria (2) and criteria (3) have not been met. Sales or production did not decline during the relevant period as required for certification. Increases of imports of articles like or directly competitive with articles produced by the firm or appropriate subdivision have not contributed importantly to the separations or threat thereof, and the absolute decline in sales or production.

TA–W–35,229; Getinge/Castle, Rochester, NY

The investigation revealed that criteria (2) has not been met. Sales or production did not decline during the relevant period as required for certification.

TA–W–35,522; Great Northern Paper, Inc., Paper Mills Div., Pinkham Div, Woodlands Div., Millinocket, ME

The investigation revealed that criteria (1) has not been met. A significant number or proportion of the workers did not become totally or partially separated from employment as required for certification.

Affirmative Determinations for Worker Adjustment Assistance

The following certifications have been issued; the date following the company name and location of each determination references the impact date for all workers of such determination.

TA–W–35,647; Parker Drilling Co., Anchorag, AK: January 13, 19998.

TA–W–35,654 A, B, C, D; Hasbro Corp Office, Pawtucket, RI, Rhode Island Manufacturing (RIM), Central Falls, RI, Hasbro Toy Group, Cincinnati, OH, Hasbro Games Group, Milton Bradley Co., East Longmeadow, MA, Hasbro Games Group, Parker Brothers, Beverly, MA: March 12, 1999.

TA–W–35,255; United States Steel, International Inc., Dravasburg, PA: November 10, 1997.

TA–W–35,202; United States Steel, International, Inc., Braddock, PA: November 2, 1997.

TA–W–35,189; Rexnord Corp., Roller Chain Div., Indianapolis, IN: October 26, 1997.

TA–W–35,277; Eaton Corp., Vehicle Switch/Electronics Div., Winamac, IN: November 13, 1997.

TA–W–35,344; General Electric, Memphis Lamp Plant, Memphis, TN: November 23, 1997.

TA–W–35,493; Linville Hosiery Co., Inc., Marion, NC: January 5, 1998.

TA–W–35,526; Williston Basin Inspection Service, Williston, ND: December 30, 1997.

TA–W–35,489; D'Arbo Limited, Inc., Monterey, TN: January 4, 1998.

TA–W–35,424; Cross Creek Apparel, Inc., Hillsville Embroidery Plant, Hillsville, VA: December 11, 1997.

TA–W–35,533; Manufacturing and Technical Enterprises, Inc., East Wilton, ME: January 8, 1998

TA–W–35,472; Tony Lama Boot Co., El Paso, TX: December 21, 1997.

TA–W–35,653; Kentucky Apparel, L.L.P., Bowling Green, KY: January 29, 1998.

TA–W–35,422; Chestnut Hill Marketing, Fall River, MA: December 12, 1997.

TA–W–35,720, A & B; Indera Mills Yadkinville, NC, Winston Salem, NC and North Wilkesboro, NC: February 11, 1998.

TA–W–35,644; Eagle Electric Mfg Co., Inc., Sanford, NC: January 16, 1998.

TA–W–35,587; Hopewell Sewing, Inc., Brodax, VA: January 18, 1998.

TA–W–35,429; Rayovac Corp., Appleton, WI: November 28, 1997.

TA–W–35,367; Auburn Sportswear, Tallassee, AL: December 2, 1997.

TA–W–35,513 & A; Hunt Oil Co., Dallas, TX and Gulf Coast Div., Houston, TX: January 5, 1998.

TA–W–35,370; Mademoiselle Knitwear, Brooklyn, NY: December 8, 1997.

TA–W–35,559; Ariana, Inc., Hoboken, NJ: January 15, 1998.

TA–W–35,518; Power Offshore Services, Inc., Belle Chasse, LA: January 11, 1998.

TA–W–35,374; Jinkerson Services, Inc., El Paso, TX: December 2, 1997.

TA–W–35,351; Komatsu America International Co., Galion, OH: February 12, 1999.

TA–W–35,434A, B, C, D, E; Baker Atlas Operating in Field Locations in TX, LA, CA, PA, MA, CO: November 30, 1997.

I further determine that all workers at Baker Atlas Headquarters and oilfield equipment manufacturing plant in Houston, TX are denied.

TA–W–35,676; Texas Boot, Inc., Smithville, TN; February 5, 1998.

TA–W–35,226; United Defense L.P., Steel Products Div/Foundry, Anniston, AL: November 3, 1997.

TA–W–35,622; The Apparel Group, Louisville, KY: February 14, 1998.

TA–W–35,304; Allen-Bradley Co., Inc., Dept #240, #250, #255, #260, #262, Milwaukee, WI: November 30, 1997.

TA–W–35,167; Tyolit North American, Inc., Westborough, MA: October 16, 1997.

TA–W–35,452 & A, B, C, D, E, F, G, H; Pendleton Woolen Mills, Fremont NE, Pendleton Corporate Office, Portland, OR, Columbia Wool Scouring, Portland, OR, Pendleton Oregon Mill, Pendleton, OR, Foundation Mill, Portland, OR, Washougal Mill, Washougal, WA, Bellevue Facility, Bellevue, NE, Door Woolen Mills, Guild NH, Pendleton Sales Representative, Cincinnati, OH: December 21, 1997.

TA–W–35,745; Berk Knit Shirt Co., Colon, MI: February 11, 1998.

TA–W–35,740; Borg-Warner Automotive, Sterling Heights Operation, Sterling Heights, MI: February 25, 1998.

TA–W–35,549 & A; Lion Apparel, Williamsburg, KY and Goldburg, KY: January 8, 1998.

TA–W–35,375; Slater Steel Corp., Specialty Alloys Div., Fort Wayne, IN: December 2, 1997.

TA–W–35,313; AM Communication, Quakertown, PA: November 17, 1997.

TA–W–35,436; Computed Anatomy, Inc., New York, NY: December 17, 1997.

TA–W–35,508; Compaq Computer Corp., Colorado Spring, CO: January 4, 1998.

TA–W–35,625; Independent Products (USA), Inc., Champlain, NY: January 15, 1998.

TA–W–35,397; Bonny Products, Inc., Washington, NC: December 12, 1997.

TA–W–35,393; Corning Consumer Products Co., Charleroi, PA: December 7, 1997.

TA–W–35,488; Doehler Jarvis/Harvard Industries (Currently d/b/a/ Pottstown Precision Casting), Stowe, PA: January 5, 1998.

TA–W–35,297; General Electro Mechanical Corp., (GEMCOR), West Seneca, NY: November 13, 1997.

TA–W–35,719; CNB International, Inc., New Products Div., Buffalo, NY: February 9, 1998.

TA–W–35,243; The Carthage Co., Carthage, MS: November 3, 1997.

TA–W–35,744; Petroglyph Operating Co., Hutchinson, KS & Operating in the following States: A; UT, B; CO: February 9, 1998.

TA–W–35,546; Cross Creek Apparel, North Wilkesboro, NC: January 12, 1998.

TA–W–35,698; Marquip, Inc., Phillips, WI: February 2, 1998.

TA–W–35,702; Hapco Screen Printing, Inc., Emmaus, PA: February 2, 1998.
TA–W–35,612 & A; Salant Corp., Obion-Denton Facilities, Obion, TN and Union City, TN: January 25, 1998.
TA–W–35,629; GN Netcom, Inc., Scotts Valley, CA: January 26, 1998.
TA–W–35,551; Coates ASI, Inc., Phoenix, AZ: January 18, 1998.
TA–W–35,492; Curtis Sportswear, Inc., Etowah, TN: January 12, 1998.
TA–W–35,636 & A; Wright's Knitwear Corp., Auburn, PA and West Hazleton, PA: January 22, 1998.
TA–W–35,621; Tyler Ten Quality, Jacksonville, TX: January 25, 1998.

Also, pursuant to Title V of the North American Free Trade Agreement Implementation Act (Pub. L. 103–182) concerning transitional adjustment assistance hereinafter called (NAFTA–TAA) and in accordance with section 250(a), Subchapter D, Chapter 2, Title II, of the Trade Act as amended, the Department of Labor presents summaries of determinations regarding eligibility to apply for NAFTA–TAA issued during the month of February and March, 1999.

In order for an affirmative determination to be made and a certification of eligibility to apply for NAFTA–TAA the following group eligibility requirements of section 250 of the Trade Act must be met:

(1) That a significant number or proportion of the workers in the workers' firm, or an appropriate subdivision thereof, (including workers in any agricultural firm or appropriate subdivision thereof) have become totally or partially separated from employment and either—
(2) That sales or production, or both, of such firm or subdivision have decreased absolutely,
(3) That imports from Mexico or Canada of articles like or directly competitive with articles produced by such firm or subdivision have increased, and that the increases in imports contributed importantly to such workers' separations or threat of separation and to the decline in sales or production of such firm or subdivision; or
(4) That there has been a shift in production by such workers' firm or subdivision to Mexico or Canada of articles like or directly competitive with articles which are produced by the firm or subdivision.

Negative Determinations NAFTA–TAA

In each of the following cases the investigation revealed that criteria (3) and (4) were not met. Imports from Canada or Mexico did not contribute importantly to workers' separations. There was no shift in production from the subject firm to Canada or Mexico during the relevant period.

NAFTA–TAA–02840; Graham-Field Health Products, Inc., Hauppauge, NY
NAFTA–TAA–02776; Co-Steel Raritan, Perth Amboy, NY
NAFTA–TAA–02717; Delta Apparel Co., Decatur, TN
NAFTA–TAA–02754; AG-Chem Equipment Co., Inc., Jackson, MN
NAFTA–TAA–02748; Thermo Power, Crusader Engine Div., Sterling Heights, MI
NAFTA–TAA–02831; Sanyo Audio Manufacturing (USA) Corp., Milroy, PA
NAFTA–TAA–02741; Compaq Computer Corp., Houston, TX
NAFTA–TAA–02726; Avery Dennison, Fasson Roll North America Div., Quakertown, PA
NAFTA–TAA–02896; Northwest Stampong & Precision, Eugene, OR
NAFTA–TAA–02796; US Can Co., Green Bay, WI
NAFTA–TAA–02907; Federal-Mogul Corp., Friction Products, New Castle, IN
NAFTA–TAA–02866; Crown Cork and Seal Col., Omaha, NE
NAFTA–TAA–02958; Schlumberger Oilfield Services, Roswell District, Roswell, NM and Operating at All Other Locations in the State of NM
NAFTA–TAA–02884 & A; Wright's Knitwear Corp., Auburn, PA and West Hazleton, PA
NAFTA–TAA–02811; Marquip, Inc., Phillips, WI
NAFTA–TAA–02941; Vanport Manufacturing, Inc., Boring, OR
NAFTA–TAA–02901; Baker Hughes Centrilift, Cody, WY
NAFTA–TAA–02879; Scripto-Tokai Corp., Fontana, CA

The investigation revealed that the criteria for eligibility have not been met for the reasons specified.

NAFTA–TAA–02873; McKinley Fiber Co., Albuquerque, NM
NAFTA–TAA–02876; Seagae Technology, Costa Mesa, CA
NAFTA–TAA–02826; Washington Public Power Supply System, Satsop Site, Elma, WA
NAFTA–TAA–02878; Bill Kaiser Co., Kansas City, MO
NAFTA–TAA–02924; RR Donnelley & Sons Co., Fulfillment and Distribution Div., Dunmore, PA
NAFTA–TAA–02782; General Electric Co., Hickory, NC

The investigation revealed that the workers of the subject firm did not produce an article within the meaning of section 250(a) of the Trade Act, as amended.

NAFTA–TAA–02848; Great Northern Paper, Inc., Paper Mills Div., Pinkham Div., Woodlands, Div. and Millinocket, ME

The investigation revealed that criteria (1) has not been met. A significant number or proportion of the workers in such workers' firm or an appropriate subdivision (including workers in any agricultural firm or appropriate subdivision thereof) did not become totally or partially separated from employment as required for certification.

Affirmative Determinations NAFTA–TAA

NAFTA–TAA–02899; Peregrine, Inc., Peregrine USA, Flint Operating, Flint, MI: January 11, 1998.
NAFTA–TAA–02859 & A; Lanier Clothes, Press and Finishing Dept., Greenville, GA and Fayette, AL: January 7, 1998. (All workers at Lanier Clothes, Fayette, engaged in employment related to the production of men's tailored coats.)

I further determine that all workers Press and Finishing Dept., Greenville, GA producing men's suits are denied.

NAFTA–TAA–02825; General Electric Co., Industrial Systems Div., Mebane, NC: December 17, 1997.
NAFTA–TAA–02713; Clarion Manufacturing Corp. of America, Walton, KY: October 28, 1997.
NAFTA–TAA–02815; Ausco Products, Inc., Benton Harbor, MI: November 25, 1997.
NAFTA–TAA–02745; Mead Paper Corp., Rumford, ME: November 12, 1999.
NAFTA–TAA–02835; Clevenger Industries, Inc., Marion, NC: January 5, 1998.
NAFTA–TAA–02833; Martin-Decker/ Totco Casper, WY & Operating in the State of ND; January 8, 1998.
NAFTA–TAA–02858: The Pillsbury Co., Haagen-Dazs Plant, Woodbridge, NJ: December 21, 1997.
NAFTA–TAA–02849; Stitches, Inc., El Paso, TX: February 24, 1998
NAFTA–TAA–02854; Porcelanite, Inc., Lexington, NC: January 13, 1998.
NAFTA–TAA–02839; Fair-Rite Products Corp., Springfield, VT: January 11, 1998.
NAFTA–TAA–02810; Cyclone Drilling, Headquartered in Gillete, WY & Operation in the following States: A; CO, B; MT, C; NM, D; ND, E; UT: December 18, 1997.
NAFTA–TAA–02797; Graphic Packaging Corp., Div. of Flexible

Packaging, Franklin, OH: November 23, 1997.

NAFTA–TAA–02882; Jamesbury, Inc., El Paso Distribution Center, El Paso, TX: January 19, 1998.

NAFTA–TAA–02895: Amphenol Corp., Amphenol Aerospace Operations, Sidney, NY: February 8, 1999.

NAFTA–TAA–02966; Galey & Lord Industries, Inc., a/k/a Galey & Lord Services Co., Eagle Pass, TX: February 22, 1998.

NAFTA–TAA–02856; Fourmost Garment, Inc., Bristol, VA: January 8, 1998.

NAFTA–TAA–02904: Imperial Home Decor Group, Plattsburg Plant, Plattsburg, NY; March 1, 1999.

NAFTA–TAA–02845; Tecos Fashions, El Paso, TX: January 12, 1998.

NAFTA–TAA–02869; Stanley Tools, Goldblatt Plant, Kansas City, KS: January 25, 1998.

NAFTA–TAA–02918; Indiana Knitwear Corp., Berk-Knit Shirt Co., Colon, MI: February 9, 1998.

NAFTA–TAA–02829; Curtis Sportswear, Inc., Etowah, TN: December 29, 1997.

NAFTA–TAA–02953; Brand-S Corp., Superior Hardwoods Div., Corvallis, OR: March 4, 1998.

NAFTA–TAA–02949; Seco Products Corp., Therma-Systems Div., South Plainfield, NJ: February 26, 1998.

I hereby certify that the aforementioned determinations were issued during the months of February and March, 1999. Copies of these determinations are available for inspection in Room C–4318, U.S. Department of Labor, 200 Constitution Avenue NW., Washington, DC 20210 during normal business hours or will be mailed to persons who write to the above address.

Dated: March 31, 1999.

Grant D. Beale,

Acting Director, Office of Trade Adjustment Assistance.

[FR Doc. 99–8383 Filed 4–5–99; 8:45 am]

BILLING CODE 4510–30–M

DEPARTMENT OF LABOR

Employment and Training Administration

[TA–W–35,576]

American Smelting and Refinery Company (ASARCO) El Paso, TX; Notice of Termination of Investigation

Pursuant to Section 221 of the Trade Act of 1974, an investigation was initiated on February 1, 1999 in response to a worker petition which was filed on behalf of workers at American Smelting and Refinery Company (ASARCO).

The petitioning group of workers is subject to an ongoing investigation for which a determination has not yet been issued (TA–W–35,516). Consequently, further investigation in this case would serve no purpose, and the investigation has been terminated.

Signed at Washington, D.C. this 23rd day of March, 1999.

Grant D. Beale,

Acting Director, Office of Trade Adjustment Assistance.

[FR Doc. 99–8389 Filed: 4–5–99; 8:45 am]

BILLING CODE 4510–30–M

DEPARTMENT OF LABOR

Employment and Training Administration

[TA–W–35, 309]

BP/AMOCO (Formerly Amoco Corporation) AMOCO Exploration and Production Amoco Shared Services; Amended Certification Regarding Eligility To Apply for Worker Adjustment Assistance

In accordance with Section 223 of the Trade Act of 1974 (19 USC 2273) the Department of Labor issued a Certification of Elibility to Apply for Worker Adjustment Assistance on February 19, 1999, applicable to workers to Amoco Exploration and Production and Amoco Shared Services, Headquartered in Houston, Texas and operating at other locations in the above mention states. The notice will be published soon in the **Federal Register**.

At the request of the company and the State agency, the Department reviewed the certification for workers of the subject firm. The workers were engaged in activities related to exploration and production of crude oil and natural gas. New findings show that in January, 1999 Amoco Corporation became known as BP/Amoco (formerly Amoco Corporation). Findings also show that some workers separated from employment at BP/Amoco, Amoco Exploration and Production and Amoco Shared Services had their wages reported under a separate unemployment insurance (UI) tax account for Amoco Production Company, Inc., headquartered in Houston, Texas and operating at other locations in the above cited states.

Accordingly, the Department is amending the certification to reflect this matter.

The amended notice applicable to TA–W–35, 309 is hereby issued as follows:

''All workers of BP/Amoco (Formerly Amoco Corporation), Amoco Exploration and Production, Amoco Shared Services, a/k/a Amoco Production Company, Inc., headquarters in Houston, Texas and operating at other locations cited below who became totally or partially separated from employment on or after October 1, 1998 through February 19, 2001 are eligible to apply for adjustment assistance under Section 223 of the Trade Act of 1974:

TA–W–35, 309A ALABAMA
TA–W–35, 309B ARKANSAS
TA–W–35, 309C CALIFORNIA
TA–W–35, 309D COLORADA
TA–W–35, 309E FLORIDA
TA–W–35, 309F ILLINOIS
TA–W–35, 309G KANSAS
TA–W–35, 309H LOUISIANA
TA–W–35, 309I MASSACHUSETTS
TA–W–35, 309J MICHIGAN
TA–W–35, 309K MISSISSIPPI
TA–W–35, 309L MISSOURI
TA–W–35, 309M NEW MEXICO
TA–W–35, 309N OKLAHOMA
TA–W–35, 309O TEXAS
TA–W–35, 309P WYOMING.''

Signed at Washington, DC this 24th day of March, 1999.

Grant D. Beale,

Acting Director, Office of Trade Adjustment Assistance.

[FR Doc. 99–8390 Filed 4–5–99; 8:45 am]

BILLING CODE 4510–30–M

DEPARTMENT OF LABOR

Employment and Training Administration

The Boeing Company, Wichita, KS; Notice of Termination of Investigation

Pursuant to Section 221 of the Trade Act of 1974, an investigation was initiated on December 21, 1998 in response to a worker petition which was filed on December 21, 1998 on behalf of workers at The Boeing Company, Wichita, Kansas.

The petitioning group of workers is the subject of an ongoing investigation whose scope includes the worker group at Wichita, Kansas. That ongoing investigation (TA–W–35,399) was also instituted on December 21, 1998. The determination resulting from TA–W–35,399 will include a ruling on eligibility for workers at Wichita, Kansas. Consequently, further investigation in this case would serve no purpose, and the investigation has been terminated.

Signed at Washington, D.C. this 23rd day of March, 1999.

Grant D. Beale,

Director, Office of Trade Adjustment Assistance.

[FR Doc. 99–8387 Filed 4–5–99; 8:45 am]

BILLING CODE 4510–30–M

DEPARTMENT OF LABOR

Employment and Training Administration

Investigations Regarding Certifications of Eligibility to Apply for Worker Adjustment Assistance

Petitions have been filed with the Secretary of Labor under section 221(a) of the Trade Act of 1974 (''the Act'') and are identified in the Appendix to this notice. Upon receipt of these petitions, the Acting Director of the Office of Trade Adjustment Assistance, Employment and Training Administration, has instituted investigations pursuant to section 221(a) of the Act.

The purpose of each of the investigations is to determine whether the workers are eligible to apply for adjustment assistance under Title II, Chapter 2, of the Act. The investigations will further relate, as appropriate, to the determination of the date on which total or partial separations began or threatened to begin and the subdivision of the firm involved.

The petitioners or any other persons showing a substantial interest in the subject matter of the investigations may request a public hearing, provided such request is filed in writing with the Acting Director, Office of Trade Adjustment Assistance, at the address shown below, not later than April 16, 1999.

Interested persons are invited to submit written comments regarding the subject matter of the investigations to the Acting Director, Office of Trade Adjustment Assistance, at the address shown below, not later than April 16, 1999.

The petitions filed in this case are available for inspection at the Office of the Acting Director, Office of Trade Adjustment Assistance, Employment and Training Administration, U.S. Department of Labor, 200 Constitution Avenue, NW, Washington, DC 20210.

Signed at Washington, DC this 8th day of March, 1999.

Grant D. Beale,

Acting Director, Office of Trade Adjustment Assistance.

APPENDIX

[Petitions Instituted on 03/08/1999]

TA–W	Subject firm (petitioners)	Location	Date of petition	Product(s)
35,759	Capco, Inc (Comp)	Coquille, OR	02/02/1999	Golf Shafts—Ski Poles.
35,760	STU Blattner, Inc (Wrks)	Golden, CO	02/03/1999	Maintance Functions.
35,761	Texaco Explor. & Prod. (Wrks)	Midland, TX	02/12/1999	Crude Oil and Natural Gas.
35,762	LSI Logic Inc. (Wrks)	Ft. Collins, CO	02/10/1999	Semi Conductors.
35,763	Heckett MultiServ (Wrks)	Vineyard, UT	02/09/1999	Process Slag.
35,764	Mike Byrd Casing Crews (Wrks)	Odessa, TX	02/17/1999	Oil Drilling Services.
35,765	Hennepin Paper Co (USWA)	Little Falls, MN	02/17/1999	Construction Paper.
35,766	R and B Falcon Drilling (Wrks)	Houma, LA	02/19/1999	Oil Drilling.
35,767	U.S. Energy (Wrks)	Riverton, WY	02/18/1999	Uranium.
35,768	VECO Corp (Comp)	Anchorage, AK	02/19/1999	Oilfield Services.
35,769	Arrow Automotive Ind. (Comp)	Morrilton, AR	02/16/1999	Remanufactured Starters, Alternators.
35,770	International Steel Wool (Comp)	Springfield, OH	02/24/1999	Chopped Steel Wool Fibers.
35,771	U.S. Can—Ballonoff (Wrks)	Columbiana, OH	02/17/1999	Decorated Metal Tins.
35,772	Battle Mountain Welding (Comp)	Battle Mountain, NV	02/12/1999	Welding Repair.
35,773	Hudson I.C.S. (Wrks)	San Leandro, CA	02/10/1999	Pencils.
35,774	Carbide, Inc (USWA)	Irwin, PA	02/02/1999	Tungsten Carbide Preforms.
35,775	Goodyear Tire and Rubber (USWA)	East Gadsden, AL	02/11/1999	Radial Passenger Tires.
35,776	Illinois Glove Co (Comp)	Beardstown, IL	02/17/1999	Gloves—Commercial and Military.
35,777	John Deere Consumer Prod. (Comp)	Greer, SC	02/22/1999	Engines of Handheld Lawn & Garden Equip.
35,778	MacWhyte Wire Rope Co (UAW)	Kenosha, WI	02/18/1999	Wire Rope.
35,779	SGL Carbon Copr (IUE)	St. Marys,, PA	02/22/1999	Graphite Parts for Industral Application.
35,780	Premiumwear, Inc (Wrks)	Fairmont, NC	02/18/1999	Sport Shirts.
35,781	Friday child Mfg. (Wrks)	New York, NY	02/03/1999	Junior Sportswear.
35,782	JPS Converter & Indust. (Comp)	Rocky Mt, VA	02/22/1999	Woven, Unfinished Fabrics.
35,783	South Bay Circuits (Comp)	San Jose, CA	02/23/1999	Printed Circuit Boards.
35,784	Hycroft Resources & Dev. (Wrks)	Winnemucca, NV	02/12/1999	Gold.
35,785	Fleenor Dirt Construction (Wrks)	Hays, KS	02/10/1999	Oilfield Construction.
35,786	Al Tech Specialty Steel (USWA)	Dunkirk, NY	02/27/1999	Stainless Steel Wire, Bars, etc.
35,787	R.R. Donnelley and Sons (GCIU)	Dunmore, PA	02/08/1999	Books, CDs.
35,788	McGregor Loudspeaker Mfg. (Wrks)	Prairie Du Chen, WI	02/17/1999	Automotive Speakers.
35,789	U.S. Colors (Wrks)	Scottsville, KY	02/01/1999	Tee Shirts.
35,790	KCS Mountain Resources (Wrks)	Worland, WY	02/12/1999	Oil and Gas.
35,791	Keystone Stihl, Inc (Comp)	Mifflintown, PA	02/18/1999	Power Tools.
35,792	Texaco Explore & Prod Tech (Comp)	Houston, TX	02/01/1999	Oil and Gas.
35,793	AR Accessories Group (Wrks)	Milwaukee, WI	02/08/1999	Men's and Ladies' Wallets.
35,794	Cone Mills Corp (Comp)	Greensboro, NC	02/23/1999	Denim Fabrics.
35,795	Robinson Manufacturing (Wrks)	Lineville, AL	02/03/1999	Men's & Boys' Underwear, Outerwear.
35,796	Tom Brown, Inc (Wrks)	Midland, TX	02/16/1999	Oil and Gas.
35,797	Columbia Controls (Wrks)	Portland, OR	02/19/1999	Assembly & Wiring of Chain Making Equip.
35,798	Ryerson-Thypin Steel Co (Wrks)	Easten, PA	02/08/1999	Stainless Steel Plat and Tube.

[FR Doc. 99–8384 Filed 4–5–99; 8:45 am]

BILLING CODE 4510–30–M

DEPARTMENT OF LABOR

Employment and Training Administration

[TA–W–35,876]

Equity Oil Company Salt Lake City, UT; Notice of Termination of Investigation

Pursuant to Section 221 of the Trade Act of 1974, an investigation was initiated on March 22, 1999, in response to a petition filed on the same date on behalf of workers at Equity Oil Company, Salt Lake City, Utah.

The company official submitting the petition has requested that the petition be withdrawn at this time. Consequently, further investigation in this case would serve no purpose, and the investigation has been terminated.

Signed in Washington, DC this 23rd day of March, 1999.

Grant D. Beale,

Acting Director, Office of Trade Adjustment Assistance.

[FR Doc. 99–8386 Filed 4–5–99; 8:45 am]

BILLING CODE 4510–30–M

DEPARTMENT OF LABOR

Employment and Training Administration

[TA–W–35,773]

Hudson ICS San Leandro, CA; Notice of Termination of Investigation

Pursuant to Section 221 of the Trade Act of 1974, an investigation was initiated on March 8, 1999 in response to a worker petition which was filed on February 11, 1999 on behalf of workers at Hudson ICS, San Leandro, California.

A negative determination applicable to the petitioning group of workers was issued on October 1, 1998 (TA–W–34,997). No new information is evident which would result in a reversal of the Department's previous determination. Consequently, further investigation in this case would serve no purpose, and the investigation has been terminated.

Signed in Washington, DC this 26th day of March, 1999.

Grant D. Beale,

Acting Director, Office of Trade Adjustment Assistance.

[FR Doc. 99–8385 Filed 4–5–99; 8:45 am]

BILLING CODE 4510–30–M

DEPARTMENT OF LABOR

Employment and Training Administration

[TA–W–35,438]

Motorola Ceramic Products, Albuquerque, NM; Notice of Affirmative Determination Regarding Application for Reconsideration

By letter of February 28, 1999 the petitioner requested administrative reconsideration of the Department of Labor's Notice of Negative Determination Regarding Eligibility to Apply for Worker Adjustment Assistance, applicable to petition number TA–W–35,438. The denial notice was signed on February 18, 1999 and will soon be published in the **Federal Register**.

The petitioner requested administrative reconsideration and provided new information which would support a reopening of the case.

Conclusion

After careful review of the application, I conclude that the claim is of sufficient weight to justify reconsideration of the Department of Labor's prior decision. The application is, therefore, granted. Signed at Washington, DC this 9th day of March, 1999.

Grant D. Beale,

Acting Director, Office of Trade Adjustment Assistance.

[FR Doc. 99–8391 Filed 4–5–99; 8:45 am]

BILLING CODE 4510–30–M

DEPARTMENT OF LABOR

Employment and Training Administration

[TA–W–35,172]

National Oilwell, McAlester, OK; Notice of Affirmative Determination Regarding Application for Reconsideration

By letter of March 3, 1999 the petitioner requested administrative reconsideration of the Department of Labor's Notice of Negative Determination Regarding Eligibility to Apply for Worker Adjustment Assistance, applicable to petition number TA–W–35,172. The denial notice was signed on February 3, 1999 and published in the **Federal Register** on February 25, 1999 (64 FR 9353).

The petitioner alleges that the Department did not thoroughly review the issue of imports of like or directly competitive products and provided additional information which warrants reconsideration of the case.

Conclusion

After careful review of the application, I conclude that the claim is of sufficient weight to justify reconsideration of the Department of Labor's prior decision. The application is, therefore, granted.

Signed at Washington, D.C. this 18th day of March, 1999.

Grant D. Beale,

Acting Director, Office of Trade Adjustment Assistance.

[FR Doc. 99–8392 Filed 4–5–99; 8:45 am]

BILLING CODE 4510–30–M

DEPARTMENT OF LABOR

Employment and Training Administration

[TA–W–35,761]

Texaco Exploration and Producing, Inc., Houston, Texas; Notice of Termination of Investigation

Pursuant to Section 221 of the Trade Act of 1974, an investigation was initiated on March 8, 1999, in response to a worker petition which was filed on behalf of workers at Texaco Exploration and Producing, Inc., Midland, Texas.

All workers of the subject firm are included in a petition investigation in process for TA–W–35,792. Consequently, further investigation in this case would serve no purpose, and the investigation has been terminated.

Signed at Washington, DC this 5th day of March, 1999.

Grant D. Beale,

Acting Director, Office of Trade Adjustment Assistance.

[FR Doc. 99–8388 Filed 4–5–99; 8:45 am]

BILLING CODE 4510–30–M

DEPARTMENT OF LABOR

Employment and Training Administration

Investigations Regarding Certifications of Eligibility To Apply for NAFTA Transitional Adjustment Assistance

Petitions for transitional adjustment assistance under the North American Free Trade Agreement-Transitional Adjustment Assistance Implementation Act (Pub. L. 103–182), hereinafter called (NAFTA–TAA), have been filed with State Governors under Section 250(b)(1) of Subchapter D, Chapter 2, Title II, of the Trade Act of 1974, as amended, are identified in the Appendix to this

Notice. Upon notice from a Governor that a NAFTA–TAA petition has been received, the Acting Director of the Office of Trade Adjustment Assistance (OTAA), Employment and Training Administration (ETA), Department of Labor (DOL), announces the filing of the petition and takes action pursuant to paragraphs (c) and (e) of Section 250 of the Trade Act.

The purpose of the Governor's actions and the Labor Department's investigations are to determine whether the workers separated from employment on or after December 8, 1993 (date of enactment of Pub. L. 103–182) are eligible to apply for NAFTA–TAA under Subchapter D of the Trade Act because of increased imports from or the shift in production to Mexico or Canada.

The petitioners or any other persons showing a substantial interest in the subject matter of the investigations may request a public hearing with the Acting Director of OTAA at the U.S. Department of Labor (DOL) in Washington, DC provided such request if filed in writing with the Acting Director of OTAA not later than April 16, 1999.

Also, interested persons are invited to submit written comments regarding the subject matter of the petitions to the Acting Director of OTAA at the address shown below not later than April 16, 1999.

Petitions filed with the Governors are available for inspection at the Office of the Acting Director, OTAA, ETA, DOL, Room C–4318, 200 Constitution Avenue, NW, Washington, DC 20210.

Signed at Washington, DC this 31st day of March, 1999.

Grant D. Beale,

Acting Director, Office of Trade Adjustment Assistance.

APPENDIX

Subject firm	Location	Date received at governor's office	Petition No.	Articles produced
V.F. Jeanswear (UFCW)	Houston, MO	02/26/1999	NAFTA–2,936	Jeans.
Rockwell Automation—Reliance Electric (IAMAW).	Madison, IN	02/26/1999	NAFTA–2,937	AC fractional motors, refrigeration.
Garden State Tanning (Co.)	Fleetwood, PA	02/26/1999	NAFTA–2,938	Leather cut sets for automotive industry.
KLH Industries (Co.)	Durant, MS	02/25/1999	NAFTA–2,939	Electrical wiring harness.
Emerson Electric—Thermodisc (Wkrs)	El Paso, TX	02/25/1999	NAFTA–2,940	Electrical switches.
Vanport (Wkrs)	Boring, OR	02/25/1999	NAFTA–2,941	Lumber.
Bailey Apparel (Co.)	Bailey, NC	02/24/1999	NAFTA–2,942	Infants, toddlers and girls dresses.
Castalia Apparel (Co.)	Castalia, NC	02/23/1999	NAFTA–2,943	Infants, toddlers and girls dresses.
Shasta (IAMAW)	Monaca, PA	02/24/1999	NAFTA–2,944	Alloy & stainless semi-finished products.
Newark Paperboard (GCU)	Woodburn, OR	02/23/1999	NAFTA–2,945	Paper tubes & paper cones.
Gambro Healthcare (Co.)	Newport News, VA	02/24/1999	NAFTA–2,946	Blood tubing sets.
Harman International (Wkrs)	Prairie du Chie, WI	03/01/1999	NAFTA–2,947	Automotive speakers.
Ansell Protective Products (UNITE)	Haynesville, LA	03/01/1999	NAFTA–2,948	Vinyl gloves.
Seco Products (Co.)	South Plainfield, NJ	03/02/1999	NAFTA–2,949	Plastic lids and inserts.
Ryerson Thypin Steel (Wkrs)	Easton, PA	03/02/1999	NAFTA–2,950	Steel tube and plate.
Equistar Chemical (Wkrs)	Port Arthur, TX	03/05/1999	NAFTA–2,951	Plastic.
Carhartt (Co.)	McKenzie, TN	03/04/1999	NAFTA–2,952	Bib overalls.
Brand S (Co.)	Corvallis, OR	03/04/1999	NAFTA–2,953	Hardwood plywood, hardwood veneer.
Lucia (Co.)	Elkin, NC	03/04/1999	NAFTA–2,954	Ladies apparel.
Wady—Employment of Solution of CA (Wkrs).	Marina Del Rey, CA	03/02/1999	NAFTA–2,955	Pijamas.
Hudson (Wkrs)	San Leandro, CA	02/18/1999	NAFTA–2,956	Pencil slats.
Barker Atlas (Co.)	Houston, TX	03/04/1999	NAFTA–2,957	Drilling.
Schlumberger (Wkrs)	Roswell, NM	02/22/1999	NAFTA–2,958	Oil.
Haggar Clothing—Weslaco (Co.)	Weslaco, TX	03/02/1999	NAFTA–2,959	Men's pants and coats.
Keystone Powdered Metal (IUE)	St. Marys, PA	03/03/1999	NAFTA–2,960	Automotive and powdered metal parts.
John Deere Consumer (Co.)	Greer, SC	03/01/1999	NAFTA–2,961	Engines for lawn and garden equipment.
Eaton Corporation (Co.)	Hamilton, IN	03/04/1999	NAFTA–2,962	Valves, sensors, actuation devices, lock.
Dean Pickle and Specialty Products (Wkrs).	Croswell, MI	03/01/1999	NAFTA–2,963	Fresh cucumbers.
West Bend Company (The) (PACE)	West Bend, WI	03/03/1999	NAFTA–2,964	Thermo plugs.
Bard Access Systems—CR Bard (Co.)	Salt Lake City, UT	02/04/1999	NAFTA–2,965	Medical device (catheters).
Galey and Lord Industries (Wkrs)	Eagle Pass, TX	03/02/1999	NAFTA–2,966	Cutting jeans.
Carolina Maid Products (Co.)	Granite Quarry, NC	03/05/1999	NAFTA–2,967	Ladies dresses.
Russell Core—Habersham Mills (Wkrs)	Habersham, GA	03/08/1999	NAFTA–2,968	Yarn.
General Electric (Co.)	Morrison, IL	03/05/1999	NAFTA–2,969	Wall thermostats.
Ametek (IAM)	Cambridge, OH	03/02/1999	NAFTA–2,970	Small electric motor.
North America Knitting (Co.)	Mansfield, OH	03/08/1999	NAFTA–2,9971	Knitted sweaters, suits, dresses, skirts.
Foremost Drill Systems (Wkrs)	Reno, NV	03/04/1999	NAFTA–2,972	Mining tools.
JWA Diving—Soni Form (Co.)	El Cajon, CA	03/08/1999	NAFTA–2,973	Buoyancy compensators.
Tultex Corporation (Co.)	Mayodan, NC	03/08/1999	NAFTA–2,974	Crewneck fleece sweatshirts.
Illinois Glove (UNITE)	Beardstown, IL	03/05/1999	NAFTA–2,975	Gloves.
Artcraft Industries—Simula (Wkrs)	Milwaukee, WI	03/10/1999	NAFTA–2,976	Aluminum frame.
Ansell Edmont (UNITE)	Haynesville, LA	03/01/1999	NAFTA–2,977	Vinyl gloves.
Puget Plastics (Co.)	Tualatin, OR	03/10/1999	NAFTA–2,978	Plastic injection parts.
Marui International Products (Wkrs)	El Paso, TX	03/10/1999	NAFTA–2,979	Automotive plastic covers.
Greenwood Mills—Lindale Manufacturing (UNITE).	Lindale, GA	03/12/1999	NAFTA–2,980	Denim cloth.
Advance Consultants (Wkrs)	Midland, TX	03/11/1999	NAFTA–2,981	Oil well geological service.
Timken Latrobe Steel (USWA)	Latrobe, PA	03/10/1999	NAFTA–2,982	Steel.

APPENDIX—Continued

Subject firm	Location	Date received at governor's office	Petition No.	Articles produced
Brow Jordan (USWA)	Newport, AR	02/26/1999	NAFTA–2,983	Casual & outdoor patio furniture.
North Power (Wkrs)	Arcade, NY	03/09/1999	NAFTA–2,984	Alternators.
Continental Sprayers International (Wkrs)	El Paso, TX	03/09/1999	NAFTA–2,985	Plastic sprayers.
Startex Mill—Spartan Mill (Wkrs)	Spartanburg, SC	03/09/1999	NAFTA–2,986	Cloth.
Fashion Enterprises (Wkrs)	El Paso, TX	03/11/1999	NAFTA–2,987	Women's jackets, suits, skirts & slacks.
Columbia Controls and Panels (Wkrs)	Portland, OR	03/12/1999	NAFTA–2,988	Assembly of electrical control cabinets.
Torrington Company (The) (Co.)	Watertown, CT	03/12/1999	NAFTA–2,989	Camshafts & tilt steering column shafts.

[FR Doc. 99–8382 Filed 4–5–99; 8:45 am]
BILLING CODE 4510–30–M

DEPARTMENT OF LABOR

Mine Safety and Health Administration

Petitions for Modification

The following parties have filed petitions to modify the application of mandatory safety standards under section 101(c) of the Federal Mine Safety and Health Act of 1977.

1. International Uranium (USA) Corporation

[Docket No. M–98–08–M]

International Uranium (USA) Corporation, HC 64, Box 153, 2555 No. Hwy 89A, Fredonia, Arizona 86022 has filed a petition to modify the application of 30 CFR 57.14130(a)(4)(roll-over protective structures (ROPS) and seat belts for surface equipment) to its Sunday Mine Complex (I.D. No. 05–01197) located in Dolores County, Colorado. The petitioner proposes to implement traffic controls instead of providing Elmac trucks with seatbelts and rollover protection for use during limited time on the surface. The petitioner proposes to: (i) restrict the speed of the Elmac trucks while traveling the short distance on the surface to five miles per hour; (ii) mark the surface area where the trucks travel as a ''No Travel Zone'' for unauthorized surface mining equipment; and (iii) require truck operators, upon exiting the portal, to conduct a ''rolling stop'' and prior to proceeding visibly survey the travel route. The petitioner asserts that by implementing these steps, all potential for a collision or rollover type accident would be eliminated while the Elmac truck is on the surface and, because seatbelts and rollover protection are only designed to mitigate injuries in the event of a rollover or collision accident, the traffic controls would provide a greater measure of protection by eliminating the possibility of a rollover or collision accident.

2. International Uranium (USA) Corporation

[Docket No. M–98–09–M]

International Uranium (USA) Corporation, HC 64, Box 153, 2555 No. Hwy 89A, Fredonia, Arizona 86022 has filed a petition to modify the application of 30 CFR 57.14130(a)(6) (roll-over protective structures (ROPS) and seat belts for surface equipment) to its Sunday Mine Complex (I.D. No. 05–01197) located in Dolores County, Colorado. The petitioner proposes to implement traffic controls instead of providing its Massey-Ferguson tractor with seatbelts and rollover protection for use during limited travel on the surface. The petitioner proposes to: (i) restrict the surface speed of its Massey-Ferguson tractor to five miles per hour; and (ii) restrict the travel of its tractor to designated routes, over maintained roadways, to the maintenance shop and parking area. The petitioner asserts that by implementing these steps, all potential for a collision or rollover-type accident would be eliminated while the Massey-Ferguson tractor is on the surface. In addition, the petitioner asserts that because rollover protection is only designed to mitigate injuries in the event of a rollover accident, the traffic controls would provide a greater measure of protection by eliminating the possibility of a collision or rollover accident.

3. International Uranium (USA) Corporation

[Docket No. M–98–10–M]

International Uranium (USA) Corporation, HC 64, Box 153, 2555 No. Hwy 89A, Fredonia, Arizona 86022 has filed a petition to modify the application of 30 CFR 57.14132(b) (horns and backup alarms for surface equipment) to its Sunday Mine Complex (I.D. No. 05–01197) located in Dolores County, Colorado. The petitioner proposes to implement area restrictions instead of providing Elmac underground-type haulage trucks with back-up alarms. The petitioner proposes to: (i) implement personnel and equipment restrictions in the ramping areas during the one occasion where the trucks move in a limited backward direction on the surface; (ii) prohibit unauthorized personnel and equipment from the stockpile ramping areas; and (iii) implement restrictions through training, including applicable revisions to the training plan and through signs clearly indicating that the ramping areas are ''No Entry'' zones. The petitioner asserts that by implementing these steps, all potential for a collision-type accident would be eliminated while the Elmac truck is backing-up the stockpile ramps. In addition, the petitioner asserts that because back-up alarms would be used to warn persons to evacuate the area where the equipment is backing up, the area restrictions, which would keep people out of the area would provide a greater measure of protection.

4. Moberly Stone Company

[Docket No. M–1999–001–M]

Moberly Stone Company, P.O. Box 582, Moberly, Missouri 65270–0582 has filed a petition to modify the application of 30 CFR 57.14100(b) (safety defects; examination, correction and records) to its Moberly Stone Company Underground Mine (I.D. No. 23–02105), and Open Pit Mine (I.D. No. 23–01785) both located in Randolph County, Missouri. The petitioner requests a modification of the mandatory safety standard to permit operation of its pit trucks without a tachometer or a speedometer. The petitioner asserts that using a tachometer or a speedometer would not contribute to any safety factor for the pit trucks since the nature of the rock deposit would only allow the pit trucks to travel at a top average speed of 10 miles an hour.

5. Canyon Fuel Company, LLC

[Docket No. M–1999–006–C]

Canyon Fuel Company, LLC, HC 35 Box 380, Helper, Utah 84526 has filed a petition to modify the application of 30 CFR 75.1909(a)(1) (nonpermissible diesel-powered equipment; design and performance requirements) to its Skyline Mine No. 3 (I.D. No. 42–01566) located in Carbon County, Utah. The petitioner requests a modification of the mandatory safety standard to permit the use of non-permissible, light duty equipment that is equipped with an over the road type diesel engine which has been or is currently being offered in commercially available highway type vehicles instead of using equipment that is equipped with an MSHA approved engine. The petitioner asserts that application of the mandatory safety standard would result in a diminution of safety to the miners. In addition, the petitioner asserts that the proposed alternative method would provide at least the same measure of protection as would the mandatory standard.

6. Energy Fuels Coal, Inc.

[Docket No. M–1999–007–C]

Energy Fuels Coal, Inc., P.O. Box 459, Florence, Colorado 81226 has filed a petition to modify the application of 30 CFR 75.701 (grounding metallic frames, casings, and other enclosures of electric equipment) to its South Field Mine (I.D. No. O5–03455) located in Fremont County, Colorado. The petitioner proposes to use a 135 kw/169 kva, 480 volt diesel powered generator set to move equipment in and out of the mine and to operate a roof bolter for roof rehabilitation in remote areas of the mine. The genset is 480 vac three phase and is mounted and grounded to a metal sled with an area of 60 square feet that is in contact with the damp mine floor at all times. Energy Fuels feels that this application is a good ground in that the genset sled has a low resistance to earth. The petitioner asserts that the proposed alternative method would provide at least the same measure of protection as would the mandatory standard.

7. CONSOL of Kentucky, Inc.

[Docket No. M–1999–008–C]

CONSOL of Kentucky, Inc., Consol Plaza, 1800 Washington Road, Pittsburgh, Pennsylvania 15241–1421 has filed a petition to modify the application of 30 CFR 75.1101–8 (water sprinkler systems; arrangement of sprinklers) to its Big Springs E1 Mine (I.D. No. 15–18115) located in Knott County, Kentucky. The petitioner requests a modification of the mandatory safety standard to permit the use of a single line of automatic secondary belt conveyors. The petitioner proposes to: (i) use a single overhead pipe system with 1/2-inch orifice automatic sprinklers located on 10-foot centers rather than every 8 feet, to cover 50 feet of fire-resistant belt or 150 feet of non-fire resistant belt with actuation temperatures between 200 and 230 degrees Fahrenheit and with water pressure equal to or greater than 10 psi; (ii) have the automatic sprinklers located not more than 10 feet apart so that the discharge of water will extend over the belt drive, belt take-up, electrical control, and gear reducing unit; and (iii) conduct a test to insure proper operation during the installation of each new system and during any subsequent repair or replacement of any critical part. The petitioner asserts that the proposed alternative method would provide at least the same measure of protection as would the mandatory standard.

8. KenAmerican Resources, Inc.

Docket No. M–1999–009–C]

KenAmerican Resources, Inc., 7590 Highway 181, Central City, Kentucky 42330 has filed a petition to modify the application of 30 CFR 75.503 (permissible electric face equipment; maintenance) to its Paradise #9 Mine (I.D. No. 15–17741) located in Muhlenberg County, Kentucky. The petitioner proposes to use a spring-loaded device with specific fastening characteristics instead of padlocks to secure plugs and electrical type connectors to batteries and to the permissible mobile powered equipment the batteries serve. The petitioner asserts that the spring-loaded device would prevent accidental separation of the battery plugs from their receptacles during normal operation of the battery equipment. In addition, the petitioner asserts that the proposed alternative method would provide at least the same measure of protection as would the mandatory standard, and would not result in a diminution of safety to the miners.

9. D & D Coal Company

[Docket No. M–1999–010–C]

D & D Coal Company, 139 E. Independence Street, Shamokin, Pennsylvania 17872 has filed a petition to modify the application of 30 CFR 75.1200(d) & (i) (mine map) to its 7' Drift (I.D. No. 36–08092) located in Schuylkill County, Pennsylvania. The petitioner proposes to use cross-sections instead of contour lines through the intake slope, at locations of rock tunnel connections between veins, and at 1,000 foot intervals of advance from the intake slope, and to limit the required mapping of the mine workings above and below to those present within 100 feet of the veins being mined except when veins are interconnected to other veins beyond the 100-foot limit through rock tunnels. The petitioner asserts that due to the steep pitch encountered in mining anthracite coal veins, contours provide no useful information and their presence would make portions of the mine illegible. The petitioner further asserts that use of cross-sections in lieu of contour lines has been practiced since the late 1800's thereby providing critical information relative to the spacing between veins and proximity to other mine workings which fluctuate considerably. The petitioner asserts that the proposed alternative method would provide at least the same measure of protection as would the mandatory standard.

10. D & D Coal Company

Docket No. M–1999–011–C]

D & D Coal Company, 139 E. Independence Street, Shamokin, Pennsylvania 17872 has filed a petition to modify the application of 30 CFR 75.1202 and 75.1202–1(a) (temporary notations, revisions, and supplements) to its 7′ Drift (I.D. No. 36–08092) located in Schuylkill County, Pennsylvania. The petitioner proposes to revise and supplement mine maps annually instead of every 6 months, as required, and to update maps daily by hand notations. The petitioner asserts that the low production and slow rate of advance in anthracite mining make surveying on 6 month intervals impractical. The petitioner asserts that the proposed alternative method would provide at least the same measure of protection as would the mandatory standard.

11. Canyon Fuel Company, LLC

[Docket No. M–1999–012–C]

Canyon Fuel Company, LLC, 397 South 800 West, Salina, Utah 84654 has filed a petition to modify the application of 30 CFR 75.1002 (location of trolley wires, trolley feeder wires, high-voltage cables and transformers) to its SUFCO Mine (I.D. No. 42–00089) located in Sevier County, Utah. The petitioner proposes to use high-voltage (2,400 volts) cables on continuous miner sections. The petitioner asserts that the proposed alternative method would provide at least the same measure of protection as would the mandatory standard.

12. Consolidation Coal Company

[Docket No. M–1999–013–C]

Consolidation Coal Company, Consol Plaza, 1800 Washington Road, Pittsburgh, Pennsylvania 15241–1421 has filed a petition to modify the application of 30 CFR 75.1002 (location of trolley wires, trolley feeder wires, high-voltage cables and transformers) to its Rend Lake Mine (I.D. No. 11–00601) located in Jefferson County, Illinois. The petitioner proposes to use high-voltage (4,160 volt) cables to supply power to its longwall mining system in by the last open crosscut. The petitioner asserts that the proposed alternative method would provide at least the same measure of protection as would the mandatory standard.

13. The Ohio Valley Coal Company

[Docket No. M–1999–014–C]

The Ohio Valley Coal Company, 56854 Pleasant Ridge Road, Alledonia, Ohio 43902 has filed a petition to modify the application of 30 CFR 75.804(a) (underground high-voltage cables) to its Powhatan No. 6 Mine (I.D. No. 33–01159) located in Belmont County, Ohio. The petitioner proposes to use a high-voltage cable with an internal ground check conductor smaller than No. 10 (A.W.G.) as part of its longwall mining system. The petitioner asserts that the proposed alternative method would provide at least the same measure of protection as would the mandatory standard.

14. Perry County Coal Corporation

[Docket No. M–1999–015–C]

Perry County Coal Corporation, P.O. Box 5001, Hazard, Kentucky 41702 has filed a petition to modify the application of 30 CFR 75.388(a)(3) (boreholes in advance of mining) to its EAS #1 Mine (I.D. No. 15–02085) located in Perry County, Kentucky. The petitioner proposes to establish a 100 foot barrier line instead of a 200 foot barrier around two adjacent mines located in the same seam as the EAS #1 Mine. The petitioner asserts that the proposed alternative method would provide at least the same measure of protection as would the mandatory standard.

Request for Comments

Persons interested in these petitions are encouraged to submit comments via e-mail to ''comments@msha.gov'', or on a computer disk along with an original hard copy to the Office of Standards, Regulations, and Variances, Mine Safety and Health Administration, 4015 Wilson Boulevard, Room 627, Arlington, Virginia 22203. All comments must be postmarked or received in that office on or before May 6, 1999. Copies of these petitions are available for inspection at that address.

Dated: March 26, 1999.

Carol J. Jones,

Acting Director, Office of Standards, Regulations, and Variances.

[FR Doc. 99–8369 Filed 4–5–99; 8:45 am]

BILLING CODE 4510–43–P

DEPARTMENT OF LABOR

Occupational Safety and Health Administration

Susan Harwood Training Grant Program

AGENCY: Occupational Safety and Health Administration (OSHA), Labor.

ACTION: Notice of availability of funds and request for grant applications.

SUMMARY: The Occupational Safety and Health Administration (OSHA) awards funds to nonprofit organizations to conduct safety and health training and education in the workplace. This notice announces grant availability for training in safety and health programs in construction; in health services; and for preventing amputations in manufacturing. The notice describes the scope of the grant program and provides information about how to get detailed grant application instructions. Applications should not be submitted without the applicant first obtaining the detailed grant application instructions mentioned later in the notice.

Section 21(c) of the Occupational Safety and Health Act of 1970 (29 U.S.C. 670) authorizes this program.

DATES: Applications must be received by May 28, 1999.

ADDRESSES: Submit grant applications to the OSHA Office of Training and Education, Division of Training and Educational Programs, 1555 Times Drive, Des Plaines, Illinois 60018.

FOR FURTHER INFORMATION CONTACT: Ronald Mouw, Chief, Division of Training and Educational Programs, or Cynthia Bencheck, Program Analyst, OSHA Office of Training and Education, 1555 Times Drive, Des Plaines, Illinois 60018, telephone (847) 297–4810, e-mail cindy.bencheck@oti.osha.gov.

SUPPLEMENTARY INFORMATION:

What is the purpose of the program?

OSHA's strategic plan contains strategic goals to improve workplace safety and health for all workers, change the workplace culture to increase employer and worker awareness of, commitment to, and involvement in safety and health, and to secure public confidence through excellence in the development and delivery of OSHA's programs and services. OSHA's intent is to reduce the number of worker injuries, illnesses and fatalities by focusing nationwide attention and Agency resources on the most prevalent types of workplace injuries and illnesses, the most hazardous industries and the most hazardous workplaces. The Susan Harwood Training Grants Program is one of the mechanisms OSHA is using to achieve its strategic goals.

Susan Harwood Training Grants provide funds to train workers and employers to recognize, avoid, and prevent safety and health hazards in their workplaces. The program emphasizes three areas.

- Educating workers and employers in small businesses. A small business has 250 or fewer workers.
- Training workers and employers about new OSHA standards.
- Training workers and employers about high risk activities or hazards identified by OSHA through its strategic plan, or as part of an OSHA special emphasis program.

Grantees are expected to develop training and/or educational programs that address topics named by OSHA, recruit workers and employers for the training, and conduct the training. Grantees will also be expected to follow-up with people who have been trained by their program to find out what, if any, changes were made to reduce hazards in their workplaces as a result of the training.

What are the training topics this year?

The purpose of this notice is to announce that funds are available for grants. The three training topics were chosen based on injuries and illnesses in selected industries identified in OSHA's strategic plan. Each grant application must address one of the following areas.

1. Preventing Amputations in Manufacturing. Programs that train workers, operators and maintenance personnel in the recognition and avoidance of amputation hazards with industrial machinery in manufacturing industries: shears, slitters, saws, slicers, and/or power presses. (Standard Industrial Classifications (SIC) beginning with the number 2 or 3).

2. Health Services. Programs that train workers in the recognition and prevention of safety and health hazards in health services facilities, including medical and dental offices, hospitals, nursing homes, medical laboratories, and home health care services. (Standard Industrial Classification (SIC) 80).

While OSHA is interested in providing health services workers with training encompassing all safety and health hazards, we are primarily concerned with ergonomic hazards and biohazards. Your proposal may cover other safety and health topics, but your program should emphasize the topics of primary concern.

3. Construction. Programs that train workers on non-residential construction sites in the recognition and avoidance of hazards relating to falls.

Who is eligible to apply for a grant?

Any nonprofit organization that is not an agency of a State or local government is eligible to apply. However, State or local government supported institutions of higher education are eligible to apply in accordance with 29 CFR 97.4(a)(1).

Applicants other than State or local government supported institutions of higher education will be required to submit evidence of nonprofit status, preferably from the IRS.

What can grant funds be spent on?

Grant funds can be spent on the following.

- Conducting training.
- Conducting other activities that reach and inform workers and employers about occupational safety and health hazards and hazard abatement.
- Developing educational materials for use in the training.

Are there restrictions on how grant funds can be spent?

OSHA will not provide funding for the following activities.

1. Any activity that is inconsistent with the goals and objectives of the Occupational Safety and Health Act of 1970.

2. Training involving workplaces that are not covered by the Occupational Safety and Health Act. Examples include state and local government workers in non-State Plan States and workers covered by section 4(b)(1) of the Act.

3. Production, publication, reproduction or use of training and educational materials, including newsletters and instructional programs, that have not been reviewed by OSHA for technical accuracy.

4. Activities that address issues other than recognition, avoidance, and prevention of unsafe or unhealthy working conditions. Examples include workers' compensation, first aid, and publication of materials prejudicial to labor or management.

5. Activities that provide assistance to workers in arbitration cases or other actions against employers, or that provide assistance to employers and/or workers in the prosecution of claims against Federal, State or local governments.

6. Activities that directly duplicate services offered by OSHA, a State under an OSHA-approved State Plan, or consultation programs provided by State designated agencies under section 7(c)(1) of the Occupational Safety and Health Act.

7. Activities intended to generate membership in the grantee's organization. This includes activities to acquaint nonmembers with the benefits of membership, inclusion of membership appeals in materials produced with grant funds, and membership drives.

What other grant requirements are there?

1. OSHA review of educational materials. OSHA will review all educational materials produced by the grantee for technical accuracy during development and before final publication. OSHA will also review training curriculums and purchased training materials for accuracy before they are used.

When grant recipients produce training materials, they will provide copies of completed materials to OSHA before the end of the grant period. OSHA has a lending program that circulates grant-produced audiovisual materials. Audiovisual materials produced by the grantee as a part of their grant program will be included in this lending program. In addition, all materials produced by grantees may be placed on the Internet by OSHA.

2. OMB and regulatory requirements. Grantees will be required to comply with the following documents.

- 29 CFR part 95, which covers grant requirements for nonprofit organizations, including universities and hospitals. These are the Department of Labor regulations implementing OMB Circular A–110.
- OMB Circular A–21, which describes allowable and unallowable costs for educational institutions.
- OMB Circular A–122, which describes allowable and unallowable costs for other nonprofit organizations.
- OMB Circular A–133, which provides information about audit requirements.

3. Certifications. All applicants will be required to certify to a drug-free workplace in accordance with 29 CFR part 98, to comply with the New Restrictions on Lobbying published at 29 CFR part 93, to make a certification regarding the debarment rules at 29 CFR part 98, and to complete a special lobbying certification.

4. Matching share. The program requires the grantee to provide a matching share of funds. Grant recipients are to provide a minimum of 20% of the total grant budget. This matching share may be in-kind, rather than a cash contribution, or a combination of cash and in-kind. For example, if the Federal share of the grant is $80,000 (80% of the grant), then the matching share will be $20,000 (20% of the grant), for a total grant of $100,000. The matching share may exceed 20%.

How are applications reviewed and rated?

OSHA staff will review grant applications and present the results to the Assistant Secretary who will make the selection of organizations to be awarded grants.

OSHA will give preference to applications which:

- Address multiple safety and health subjects. For example, an application for the target preventing amputations in manufacturing which addresses machine guarding, ergonomic, and lockout/tagout hazards would be preferred over one that only addresses machine guarding.
- Plan to conduct train-the-trainer programs and gather data concerning the courses and the number of students trained by the new trainers as a part of their grant.
- Train managers and/or supervisors in addition to workers.
- Serve multiple employers. OSHA is interested in reaching more than one employer with each grant awarded.

The following factors will be considered in evaluating grant applications.

1. Program Design

a. The proposed training and education program addresses one of the following topics.

i. Preventing amputations in manufacturing.

ii. Safety and health hazards at health services facilities.

iii. Fall protection in non-residential construction.

b. The proposal plans to train workers and/or employers and clearly estimates the numbers to be trained.

c. The proposal contains a train-the-trainer program, and the number of students to be trained by these new trainers are clearly estimated.

d. The planned activities are appropriate for the workers and/or employers to be trained.

e. There is a plan to recruit trainees for the program.

f. If the proposal includes developing educational materials, there is a plan for OSHA to review the materials during development.

g. There is a plan to evaluate the program's effectiveness and this includes plans to follow-up with trainees to see if the training resulted in workplace change.

h. The planned work can be accomplished in one year.

i. There is a description of the target population, the hazards that will be addressed, the barriers which have prevented adequate training for the target population, why the program cannot be completed without Federal funds, and why funding sources currently available cannot be used for this purpose.

2. Program Experience

a. The organization applying for the grant demonstrates experience with occupational safety and health.

b. The organization applying for the grant demonstrates experience training adults in work-related subjects.

c. The staff to be assigned to the project have experience in (1) occupational safety and health, (2) the specific topic chosen, and (3) training adults.

d. The organization applying for the grant demonstrates experience in recruiting and training the population it proposes to serve under the grant.

3. Administrative Capability

a. The applicant organization demonstrates experience managing a variety of programs.

b. The applicant organization has administered, or will work with an organization that has administered, a number of different Federal and/or State grants over the past five years.

c. The application is complete, including forms, budget detail, narrative and workplan, and required attachments.

4. Budget

a. The budgeted costs are reasonable.

b. The proposed non-Federal matching share is at least 20% of the total budget.

c. The budget complies with Federal cost principles (which can be found in applicable OMB Circulars) and with OSHA budget requirements contained in the grant application instructions.

d. The cost per trainee is less than $500 and the cost per training hour is reasonable.

In addition to the factors listed above, the Assistant Secretary will take other items into consideration, such as the geographical distribution of the grant programs and the coverage of populations at risk.

How much money is available for grants?

There is approximately $1.8 million available for this program. The average Federal award will be $125,000.

How long are grants awarded for?

Grants are awarded for a twelve-month period. If first year performance is satisfactory and funds are available, grants will be renewed for an additional twelve-month period.

How do I get a grant application package?

Grant application instructions may be obtained from the OSHA Office of Training and Education, Division of Training and Educational Programs, 1555 Times Drive, Des Plaines, Illinois 60018. The application instructions are also available at http://www.osha-slc.gov/Training/sharwood/sharwood.html.

When and where are applications to be sent?

The application deadline is 4:30 p.m. Central Time, Friday, May 28, 1999.

Applications are to be mailed to the Division of Training and Educational Programs, OSHA Office of Training and Education, 1555 Times Drive, Des Plaines, IL 60018. Applications may be sent by fax to (847) 297–4874.

How will I be told if my application was selected?

Organizations selected as grant recipients will be notified by a representative of the Assistant Secretary, usually from an OSHA Regional Office. An applicant whose proposal is not selected will be notified in writing.

Notice that an organization has been selected as a grant recipient does not constitute approval of the grant application as submitted. Before the actual grant award, OSHA will enter into negotiations concerning such items as program components, funding levels, and administrative systems. If the negotiations do not result in an acceptable submittal, the Assistant Secretary reserves the right to terminate the negotiation and decline to fund the proposal.

Signed at Washington, DC, this 26 day of March 1999.

Charles N. Jeffress,

Assistant Secretary of Labor.

[FR Doc. 99–8112 Filed 4–5–99; 8:45 am]

BILLING CODE 4510–26–P

NUCLEAR REGULATORY COMMISSION

Agency Information Collection Activities: Submission for OMB Review; Comment Request

AGENCY: Nuclear Regulatory Commission (NRC).

ACTION: Notice of the OMB review of information collection and solicitation of public comment.

SUMMARY: The NRC has recently submitted to OMB for review the following proposal for the collection of information under the provisions of the Paperwork Reduction Act of 1995 (44 U.S.C. Chapter 35). The NRC hereby informs potential respondents that an agency may not conduct or sponsor, and that a person is not required to respond to, a collection of information unless it displays a currently valid OMB control number.

1. Type of submission, new, revision, or extension: Extension.

2. The title of the information collection: 10 CFR part 75—Safeguards on Nuclear Material—Implementation of US/IAEA Agreement

3. The form number, if applicable: Not applicable.

4. How often the collection is required: Installation information is submitted upon written notification from the Commission. Changes are submitted as they occur. Nuclear Material accounting and control information is submitted in accordance with specified instructions.

5. Who will be required or asked to report: Selected persons licensed or certified by the Commission or Agreement States to possess source or special nuclear material at an installation specified on the U. S. eligible list as determined by the Secretary of State or his designee and filed with the Commission, as well as holders of construction permits and applicants who apply for licenses to possess one effective kilogram or more of special nuclear or source material.

6. An estimate of the number of responses: 13

7. The estimated number of annual respondents: 6

8. An estimate of the total number of hours needed annually to complete the requirement or request: 4,848 (48 hours for reporting and 800 hours each for 6 recordkeepers).

9. An indication of whether section 3507(d), Pub. L. 104–13 applies: Not applicable.

10. Abstract: 10 CFR part 75 establishes a system of nuclear material accounting and control to implement the agreement between the United States and the International Atomic Energy Agency (IAEA). Under that agreement, NRC is required to collect the information and make it available to the IAEA. Currently, the IAEA has selected and is inspecting one out of six NRC-licensed facilities pursuant to 10 CFR 75.41.

A copy of the final supporting statement may be viewed free of charge at the NRC Public Document Room, 2120 L Street, NW (lower level), Washington, DC. OMB clearance requests are available at the NRC worldwide web site (http://www.nrc.gov/NRC/PUBLIC/OMB/index.html). The document will be available on the NRC home page site for 60 days after the signature date of this notice.

Comments and questions should be directed to the OMB reviewer by May 6, 1999. Comments received after this date will be considered if it is practical to do so, but assurance of consideration cannot be given to comments received after this date. Erik Godwin, Office of Information and Regulatory Affairs (3150–0055), NEOB–10202, Office of Management and Budget, Washington, DC 20503.

Comments can also be submitted by telephone at (202) 395–3084.

The NRC Clearance Officer is Brenda Jo. Shelton, 301–415–7233.

Dated at Rockville, Maryland, this 31st day of March 1999.

For the Nuclear Regulatory Commission.

Brenda Jo. Shelton,

NRC Clearance Officer, Office of the Chief Information Officer.

[FR Doc. 99–8434 Filed 4–5–99; 8:45 am]

BILLING CODE 7590–01–P

NUCLEAR REGULATORY COMMISSION

[Docket No. 040–8778]

License Amendment by Molycorp, Inc; Meeting

AGENCY: Nuclear Regulatory Commission.

ACTION: Notice of Public Meeting.

SUMMARY: The U.S. Nuclear Regulatory Commission (NRC) will hold this public meeting to: (1) discuss with the public its review of a license amendment request by Molycorp, Inc., to construct and operate an interim (5–10 year) storage facility at its ferro-alloy production plant in Washington, PA; and (2) discuss the status of decommissioning of the Washington, PA, site.

In August of 1992, Molycorp informed NRC of its intent to terminate the Source Material license for its York, PA, facility. The amendment request to construct the storage facility was submitted to NRC in a letter from the licensee dated February 8, 1996. A subsequent request for storage of Molycorp York soils at the Molycorp, Washington, site was proposed as part of a decommissioning plan for the York site. The radioactive soils were generated in operations conducted at the York rare earth metal recovery facility from 1965 to 1992. These soils have a volume of approximately 3,000 cubic yards and before approval of the amendment request can be granted, the licensee must demonstrate that containment will be provided for the radioactive soils (contaminated with thorium-228 and uranium-238) proposed to be transported from York to Washington, PA. The NRC review is assessing the environmental and safety impacts of this request.

DATES: April 15, 1999, at 6 pm.

ADDRESSES: North Trinity Elementary School, 225 Midland Drive, Washington, Pennsylvania.

STATUS: Pubic and Open.

The NRC staff has arranged this public meeting to discuss the NRC's review conducted to assess the potential significance of environmental impacts associated with the amendment request. The results of the review will be considered along with other factors in determining whether construction of the interim storage facility will be granted. In addition, the status of decommissioning of the Washington, PA, site will be discussed.

AGENDA FOR MOLYCORP MEETING: This public meeting will begin at 6:00 p.m. and adjourn at 9:00 p.m.

Topic Lead

1. Introduction and discussion of meeting participation procedures—John Olshock, Solicitor, Canton Township Supervisors
2. Introduction of NRC staff and discussion of NRC decision making process—Robert Nelson, Chief, NRC Special Projects Section
3. Presentation of NRC review—Roy Person, Sr. Materials Engineer, NRC
4. Questions/answers and comments—Meeting participants
5. Summary of action items—Robert Nelson
6. Adjourn meeting—Canton Township Supervisors

For further information regarding this meeting, contact Roy Person of the NRC, at (301) 415–6701. For further details with respect to this action, the draft environmental assessment for this licensing action and the Decommissioning Plan for the York site are available for inspection at the NRC's Public Document Room, 2120 L Street N.W., Washington, DC 20555.

Dated at Rockville, Maryland, this 30th day of March 1999.

For the Nuclear Regulatory Commission.

John W.N. Hickey,

Chief, Low-Level Waste and Decommissioning Projects Branch, Division of Waste Management, Office of Nuclear Material Safety and Safeguards.

[FR Doc. 99–8435 Filed 4–5–99; 8:45 am]

BILLING CODE 7590–01–P

NUCLEAR REGULATORY COMMISSION

[Docket Nos. 50–272 and 50–311]

Public Service Electric and Gas Co.; Salem Nuclear Generating Station, Unit Nos. 1 and 2 Environmental Assessment and Finding of No Significant Impact

The U.S. Nuclear Regulatory Commission (the Commission) is considering issuance of an exemption from certain requirements of its regulations to Facility Operating License Nos. DPR–70 and DPR–75 for the Salem Nuclear Generating Station, Unit Nos. 1 and 2, respectively, issued to the Public Service Electric and Gas Company (the licensee), for operation of the Salem Nuclear Generating Station, located in Salem County, New Jersey.

Environmental Assessment

Identification of Proposed Action

The proposed action would exempt the licensee from the requirements of 10 CFR 50.71(e)(4) regarding submission of revisions to the updated final safety analysis report (UFSAR). Under the proposed exemption, the licensee would schedule updates to UFSAR, common for both units, based on the refueling cycle of Salem Unit 1 and at intervals not to exceed 24 months.

The Need for the Proposed Action

The *Code of Federal Regulations,* 10 CFR 50.71(e)(4), requires licensees to submit updates to their FSAR annually or within 6 months after each refueling outage provided that the interval between successive updates does not exceed 24 months. Since Units 1 and 2 share a common FSAR, the licensee must update the same document annually or within 6 months after a refueling outage for either unit. The underlying purpose of the rule was to relieve licensees of the burden of filing annual FSAR revisions while assuring that such revisions are made at least every 24 months. The Commission reduced the burden, in part, by permitting a licensee to submit its FSAR revisions 6 months after refueling outages for its facility, but did not provide for multiple unit facilities

sharing a common FSAR in the rule. Rather, the Commission stated: ''With respect to the concern about multiple facilities sharing a common FSAR, licensees will have maximum flexibility for scheduling updates on a case-by-case basis'' (57 FR 39355) (1992). Allowing the exemption would maintain the updated FSAR current within 24 months of the last revision.

Environmental Impacts of the Proposed Action

The Commission has completed its evaluation of the proposed action and concludes that it involves administrative activities unrelated to plant operation.

The proposed action will not increase the probability or consequences of accidents, no changes are being made in the types of any effluents that may be released off site, and there is no significant increase in occupational or public radiation exposure. Therefore, there are no significant radiological environmental impacts associated with the proposed action.

With regard to potential non-radiological impacts, the proposed action does not involve any historic sites. It does not affect non-radiological plant effluents and has no other environmental impact. Therefore, there are no significant non-radiological environmental impacts associated with the proposed action.

Accordingly, the Commission concludes that there are no significant environmental impacts associated with this action.

Alternative to the Proposed Action

As an alternative to the proposed action, the staff considered denial of the proposed action (i.e., the ''no-action'' alternative). Denial of the exemption would result in no change in current environmental impacts. The environmental impacts of the proposed action and the alternative action are similar.

Alternative Use of Resources

This action does not involve the use of any resources not previously considered in the Final Environmental Statement for the Salem Nuclear Generating Station.

Agencies and Persons Contacted

In accordance with its stated policy, on March 31, 1999, the staff consulted with the New Jersey State official, Mr. Dennis Zannoni, Chief, Bureau of Nuclear Engineering, regarding the environmental impact of the proposed action. The State official had no comments.

Finding of No Significant Impact

On the basis of the environmental assessment, the Commission concludes that the proposed action will not have a significant effect on the quality of the human environment. Accordingly, the Commission has determined not to prepare an environmental impact statement for the proposed exemption.

For further details with respect to this action, see the licensee's letter dated December 2, 1998, which is available for public inspection at the Commission's Public Document Room, The Gelman Building, 2120 L Street, NW., Washington DC, and at the local public document room located at the Salem Free Public Library, 112 West Broadway, Salem, NJ 08079.

Dated at Rockville, Maryland, this 31st day of March 1999.

For the Nuclear Regulatory Commission.

Elinor G. Adensam,

Director, Project Directorate I–2, Division of Licensing Project Management, Office of Nuclear Reactor Regulation.

[FR Doc. 99–8436 Filed 4–5–99; 8:45 am]

BILLING CODE 7590–01–P

NUCLEAR REGULATORY COMMISSION

Advisory Committee on Reactor Safeguards, Joint Meeting of the ACRS Subcommittees on Reliability and Probabilistic Risk Assessment and on Regulatory Policies and Practices; Notice of Meeting

The ACRS Subcommittees on Reliability and Probabilistic Risk Assessment and on Regulatory Policies and Practices will hold a joint meeting on April 21, 1999, Room T–2B3, 11545 Rockville Pike, Rockville, Maryland.

The entire meeting will be open to public attendance.

The agenda for the subject meeting shall be as follows:

Wednesday, April 21, 1999—8:30 a.m. until the conclusion of business

The Subcommittees will review the staff reconciliation of public comments on performance-based initiatives (SECY–98–132); plan for pursuing performance-based initiatives, candidate activities, and related matters; and NUREG/CR–5392, ''Elements of an Approach to Performance-Based Regulatory Oversight.'' The purpose of this meeting is to gather information, analyze relevant issues and facts, and to formulate proposed positions and actions, as appropriate, for deliberation by the full Committee.

Oral statements may be presented by members of the public with the concurrence of the Subcommittee Chairman; written statements will be accepted and made available to the Committee. Electronic recordings will be permitted only during those portions of the meeting that are open to the public, and questions may be asked only by members of the Subcommittees, their consultants, and staff. Persons desiring to make oral statements should notify the cognizant ACRS staff engineer named below five days prior to the meeting, if possible, so that appropriate arrangements can be made.

During the initial portion of the meeting, the Subcommittees, along with any of their consultants who may be present, may exchange preliminary views regarding matters to be considered during the balance of the meeting.

The Subcommittees will then hear presentations by and hold discussions with representatives of the NRC staff, their consultants, and other interested persons regarding this review.

Further information regarding topics to be discussed, whether the meeting has been canceled or rescheduled, and the Chairman's ruling on requests for the opportunity to present oral statements and the time allotted therefor can be obtained by contacting the cognizant ACRS staff engineer, Mr. Michael T. Markley (telephone 301/415–6885) between 7:30 a.m. and 4:15 p.m. (EST). Persons planning to attend this meeting are urged to contact the above named individual one or two working days prior to the meeting to be advised of any potential changes to the agenda, etc., that may have occurred.

Dated: March 30, 1999.

Richard P. Savio,

Associate Director for Technical Support, ACRS/ACNW.

[FR Doc. 99–8432 Filed 4–5–99; 8:45 am]

BILLING CODE 7590–01–P

POSTAL SERVICE

Privacy Act of 1974, System of Records

AGENCY: Postal Service.

ACTION: Notice of modification to an existing system of records.

SUMMARY: This document publishes notice of modification to Privacy Act System of Records USPS 120.151, Personnel Records—Recruiting, Examining, and Appointment Records. The proposed modification expands the system location to include contractor sites.

DATES: Any interested party may submit written comments on the proposed

modification. This proposal will become effective without further notice on May 17, 1999, unless comments received on or before that date result in a contrary determination.

ADDRESSES: Written comments on this proposal should be mailed or delivered to Administration and Records, United States Postal Service, 475 L'Enfant Plaza, SW, Room 8141, Washington, DC 20260–5243. Copies of all written comments will be available at the above address for public inspection and photocopying between 8 a.m. and 4:45 p.m., Monday through Friday.

FOR FURTHER INFORMATION CONTACT: Susan M. Aldorfer (202) 268–2938.

SUPPLEMENTARY INFORMATION: Privacy Act System of Records USPS 120.151, Personnel Records—Recruiting, Examining, and Appointment Records, collects information for recruiting and recommending appointment of qualified individuals. Such information consists of personal and professional resumes, personal applications, test scores, medical assessments, academic transcripts, letters of recommendation, employment certifications, medical records, and registers of eligibles. System locations include U.S. Postal Service personnel offices, the National Test Administration Center (NTAC), the Minneapolis Integrated Business Systems Solutions Center (MIBSSC), and/or other offices within Postal Service facilities authorized to engage in recruiting or examining activities or to make appointments to positions. This notice expands the system location to include contractor sites.

Selection assessment tests have been developed for use as a management tool to be used in conjunction with other information from the selection process to choose qualified individuals for postal positions. In some instances, the Postal Service will use contractors to perform services relative to assessment, such as scoring tests. For that reason, the system location is expanded to include contractor sites. Any contractor who maintains information collected by this system is made subject to the Privacy Act in accordance with subsection (m) and is required to apply appropriate protections subject to the audit and inspection of the Postal Inspection Service.

Pursuant to 5 U.S.C. 552a(e)(11), interested persons are invited to submit written data, views, or arguments on the proposed part of this notice. A report of the proposed system change has been sent to Congress and to the Office of Management and Budget for their evaluation.

USPS Privacy Act system 120.151 was last published in its entirety in the **Federal Register** on October 26, 1989 (54 FR 43693) and was amended on October 11, 1990 (55 FR 41398–41400). The Postal Service proposes amending the system as shown below:

USPS 120.151

SYSTEM NAME:

Personnel Records—Recruiting, Examining, and Appointment Records, 120.151.

SYSTEM LOCATION:

[CHANGE TO READ:]

U.S. Postal Service personnel offices; the National Test Administration Center (NTAC); the Minneapolis Integrated Business Systems Solutions Center (MIBSSC); other offices within Postal Service facilities authorized to engage in recruiting or examining activities or to make appointments to positions; and contractor sites.

* * * * *

Stanley F. Mires,

Chief Counsel, Legislative.

[FR Doc. 99–8401 Filed 4–5–99; 8:45 am]

BILLING CODE 7710–12–P

SECURITIES AND EXCHANGE COMMISSION

Proposed Collection; Comment Request

Upon Written Request, Copies Available From: Securities and Exchange Commission, Office of Filings and Information Services, Washington, DC 20549

Extension:

Rule 236, SEC File No. 270–118, OMB Control No. 3235–0095

Notice is hereby given that pursuant to the Paperwork Reduction Act of 1995 (44 U.S.C. 3501 *et seq.*), the Securities and Exchange Commission (''Commission'') is soliciting comments on the collection of information summarized below. The Commission plans to submit this existing collection of information to the Office of Management and Budget for extension and approval.

Rule 236 under the Securities Act of 1933 (''Securities Act'') requires issuers wishing to rely upon an exemption from the Securities Act registration for the issuance of fractional shares, script certificates or order forms, in connection with a stock dividend, stock split, reverse stock split, conversion, merger or similar transaction to furnish specified information to the Commission in writing at least ten days prior to the offering. The information is needed to provide notice that an issuer is relying on the exemption. Public companies are the likely respondents. An estimated ten submissions are made pursuant to Rule 236 annually, resulting in an estimated annual total burden of 15 hours.

Written comments are invited on: (a) Whether the proposed collection of information is necessary for the proper performance of the functions of the agency, including whether the information will have practical utility; (b) the accuracy of the agency's estimate of the burden of the collection of information; (c) ways to enhance the quality, utility, and clarity of the information collected; and (d) ways to minimize the burden of the collection of information on respondents, including through the use of automated collection techniques or other forms of information technology. Consideration will be given to comments and suggestions submitted in writing within 60 days of this publication.

Please direct your written comments to Michael E. Bartell, Associate Executive Director, Office of Information Technology, Securities and Exchange Commission, 450 5th Street, N.W. Washington, DC 20549.

Dated: March 29, 1999.

Margaret H. McFarland,

Deputy Secretary.

[FR Doc. 99–8437 Filed 4–5–99; 8:45 am]

BILLING CODE 8010–01–M

SECURITIES AND EXCHANGE COMMISSION

Existing Collection Comment Request

Upon Written Request, Copies Available From: Securities and Exchange Commission, Office of Filings and Information Services, Washington, D.C. 20549–0007

Extension:

Rule 17f–4 [17 CFR 270.17f–4] SEC File No. 270–232 OMB Control No. 3235–0225.

Notice is hereby given that, pursuant to the Paperwork Reduction Act of 1995 (44 U.S.C. 3501–3520), the Securities and Exchange Commission (the ''Commission'') is soliciting comments on the collections of information summarized below. The Commission plans to submit these existing collections of information to the Office of Management and Budget (''OMB'') for extension and approval.

Section 17(f) [1] of the Investment Company Act of 1940 [2] (the ''Act'')

[1] 15 U.S.C. 80a–17(f).

[2] 15 U.S.C. 80a.

permits registered management investment companies (''funds'') and their custodians to maintain fund assets in system for the central handling of securities, subject to Commission rules. Rule 17f–4 [3] under the Act defines this type of system as a ''securities depository.'' The rule sets conditions for the use of certain depositories, including a U.S. registered clearing agency that acts as a depository, and the federal book-entry system for government securities.[4]

Certain information collection requirements apply to the fund's custodian when, as in the usual case, a fund uses a depository through its custodian. Rule 17f–4 requires the custodian to send the fund a written confirmation of each transfer or securities to or from the fund's account with the custodian. When securities are transferred to the fund's account, the custodian also must identify as belonging to the fund (or ''earmark'') an appropriate quantity of securities that the custodian holds in a fungible bulk with the depository (or with any agent through which the custodian uses the depository). In addition, the custodian or its agent must send the fund reports it receives concerning the depository's internal accounting controls, and reports on the custodian's or agent's own controls as the fund may reasonably request.

Other information collection requirements apply to the fund. The fund's board of directors must approve by resolution the custodian's arrangement with each depository, and material changes in any arrangement. In the unusual cast when a fund deals directly with a depository, the fund board must approve the arrangement with the depository, and the fund must establish a system that is reasonably designed to prevent unauthorized officer's instructions.[5]

Rule 17f–4 facilitates the safe use of depositories, which can simplify the clearance and settlement of securities transactions and reduce risks of loss, theft, and destruction of securities. The rule's requirements that the custodian confirm transactions and earmark a portion of its holdings for the fund help to document the fund's transactions, and provide evidence of the funds's interest in ''omnibus'' depository accounts that may contain the pooled assets of multiple owners. The requirement that the custodian and its agent send the fund reports on internal controls helps the fund and its auditors to evaluate the reliability of the custodian, its agent, and the depository. The requirement that the fund board approve depository arrangements and material changes encourages directors to review periodically the safety of these arrangements. The requirement that the fund have a system to prevent unauthorized officer's instructions helps to protect fund assets from misappropriation.

The Commission staff estimates that 3,400 respondents (including 3,300 funds, 50 bank custodians, and 50 agents of the custodians) make approximately 25,750 responses under the rule each year. The staff estimates that on average, 50 custodians spend 500 hours each year in transmitting daily confirmations to funds and 250 hours in earmarking holdings for funds, and 100 custodians and agents spend 16 hours annually in transmitting reports to funds. The staff estimates that on average, 500 funds spend 6 hours each year in approving new depository arrangements or changes in existing arrangements, and 50 funds spend 10 hours each year in implementing systems to prevent unauthorized officer's instructions. The total annual burden of the rule's requirements for all respondents therefore is estimated to be 42,600 hours ((50 custodians × 750 hours) + (100 custodians and agents × 16 hours) + (500 funds × 6 hours) + (50 funds × 10 hours)).[6]

The estimated annual burden of 42,600 burden hours represents an increase of 17,344 hours over the prior estimate of 25,256 hours. The increase in annual burden hours is attributable to the staff's recognition that the rule imposes information collection requirements on funds as well as custodians, and to increases in the estimated time spent by custodians and agents in collection information relating to an increasing number of funds transactions.

The estimate of average burden hours is made solely for the purposes of the Paperwork Reduction Act. The estimate is not derived from a comprehensive or even a representative survey or study of the costs of Commission rules. An agency may not conduct or sponsor, and a person is not required to respond to, a collection of information unless it displays a currently valid control number.

Written comments are invited on: (a) Whether the collections of information are necessary for the proper performance of the functions of the Commission, including whether the information has practical utility; (b) the accuracy of the Commission's estimate of the burdens of the collections of information; (c) ways to enhance the quality, utility, and clarity of the information collected; and (d) ways to minimize the burdens of the collections of information on respondents, including through the use of automated collection techniques or other forms of information technology. Consideration will be given to comments and suggestions submitted in writing within 60 days of this publication.

Please direct your written comments to Michael E. Bartell, Associate Executive Director, Office of Information Technology, Securities and Exchange Commission, 450 5th Street, N.W. Washington, D.C. 20549–0004.

Dated: March 23, 1999.

Margaret H. McFarland,

Deputy Secretary.

[FR Doc. 99–8438 Filed 4–5–99; 8:45 am]

BILLING CODE 8010–01–M

[3] 17 CFR 270.17f–4.

[4] Rule 17f–4 does not regulate the use of foreign securities depositories. Funds that maintain securities in foreign depositories must comply with rule 17f–5 under the Act [17 CFR 270.17f–5].

[5] Officer's instructions are directions to the depository by authorized personnel of the fund.

[6] The estimated average burden hours do not reflect the costs of operating computer systems used by custodians to provide confirmations and earmark assets, and used by funds to help prevent unauthorized officer's instructions.

SECURITIES AND EXCHANGE COMMISSION

[Release No. IC–23767; 812–9204]

The Aquinas Funds, Inc., et al.; Notice of Application

March 30, 1999.

AGENCY: Securities and Exchange Commission (''SEC'').

ACTION: Notice of application for an order under section 6(c) of the Investment Company Act of 1940 (the ''Act'') for an exemption from section 15(a) of the Act and rule 18f–2 under the Act.

SUMMARY OF APPLICATION: The requested order would permit applicants, The Aquinas Funds, Inc. (''Company'') and Aquinas Investment Advisers, Inc. (''Adviser''), to enter into and materially amend subadvisory agreements without obtaining shareholder approval.

FILING DATES: The application was filed on September 2, 1994, and was amended on September 20, 1995, and January 13, 1999. Applicants have agreed to file an amendment during the notice period, the substance of which is reflected in this notice.

HEARING OR NOTIFICATION OF HEARING: An order granting the application will be issued unless the SEC orders a hearing. Interested persons may request a hearing by writing to the SEC's

Secretary and serving applicants with a copy of the request, personally or by mail. Hearing requests should be received by the SEC by 5:30 p.m. on April 26, 1999, and should be accompanied by proof of service on applicants, in the form of an affidavit, or, for lawyers, a certificate of service. Hearing requests should state the nature of the writer's interest, the reason for the request, and the issues contested. Persons who wish to be notified of a hearing may request notification by writing to the SEC's Secretary.

ADDRESSES: Secretary, SEC, 450 Fifth Street, N.W., Washington, D.C. 20549–0609; Applicants, 5310 Harvest Hill Road, Suite 248, Dallas, TX 75230.

FOR FURTHER INFORMATION CONTACT: Deepak T. Pai, Senior Counsel, at (202) 942–0574 or Nadya Royblat, Assistant Director, at (202) 942–0564, (Division of Investment Management, Office of Investment Company Regulation).

SUPPLEMENTARY INFORMATION: The following is a summary of the application. The complete application may be obtained for a fee at the SEC's Public Reference Branch, 450 Fifth Street, N.W., Washington, D.C. 20549–0102 (telephone (202) 942–8090).

Applicants' Representations

1. The Company is registered under the Act as an open-end management investment company offering shares in four separate portfolios: Aquinas Fixed Income Fund, Aquinas Equity Income Fund, Aquinas Equity Growth Fund, and Aquinas Balanced Fund (''Funds''), each with its own distinct investment objectives, policies, and restrictions.[1] The Company is organized as a Maryland corporation.

2. The Adviser, registered under the Investment Advisers Act of 1940 (''Advisers Act''), serves as investment adviser to the Company pursuant to an investment advisory agreement (''Management Agreement''). Specific portfolio management for each Fund is provided by at least two portfolio managers (''Portfolio Managers''), each of which is registered under the Advisers Act.

3. Under the Management Agreement, the Adviser, subject to approval by the Company's board of directors (''Board''), provides each Fund with general management and administration services, develops the investment programs, selects, hires, and monitors Portfolio Managers, and allocates assets among the Portfolio Managers. Portfolio Managers are selected for the Funds based primarily upon the research and recommendations of the Adviser, which evaluates quantitatively and qualitatively the Portfolio Manager's skills and results in managing assets for specific asset classes, investment styles and strategies. For these services, the Adviser receives an annual management fee from each Fund based on the Fund's average net assets.

4. Under sub-advisory agreements between the Company and the Adviser and the Portfolio Managers (''Portfolio Management Agreements''), each Portfolio Manager purchases and sells portfolio securities for its segment of a Fund in accordance with the Fund's investment objectives, restrictions, and policies. The Adviser pays the Portfolio Managers' fees out of the fees the Adviser receives from the Fund.

5. Applicants request an order to permit the Adviser to enter into and materially amend Portfolio Management Agreements without obtaining shareholder approval.[2] The requested relief will not extend to a Portfolio Manager that is an ''affiliated person'' (as defined in section 2(a)(3) of the Act) of the Company, the Adviser, or the Funds, other than by reason of serving as a Portfolio Manager to one or more of the Funds (an ''Affiliated Portfolio Manager''). None of the current Portfolio Managers is an Affiliated Portfolio Manager.

Applicants' Legal Analysis

1. Section 15(a) of the Act provides, in relevant part, that it is unlawful for any person to act as an investment adviser to a registered investment company except under a written contract approved by a majority of the investment company's outstanding voting shares. Rule 18f–2 under the Act provides that each series or class of stock in a series company affected by a matter must approve the matter if the Act requires shareholder approval.

2. Section 6(c) of the Act authorizes the SEC to exempt persons or transactions from the provisions of the Act to the extent that the exemption is necessary or appropriate in the public interest and consistent with the protection of investors and the purposes fairly intended by the policies and provisions of the Act. Applicants believe that their requested relief meets this standard for the reasons discussed below.

3. Applicants assert that a Fund's shareholders rely on the Adviser's ability to select, monitor and replace the Portfolio Managers. Applicants represent that the Adviser has substantial experience in performing these functions for the Company and has managed the Funds, since September 1994, with multiple Portfolio Managers. Applicants submit that, from the perspective of an investor, the role of the Portfolio Managers is comparable to that of individual portfolio managers employed by other investment advisory firms. Applicants content that granting the requested relief would enable the Fund's Adviser/Portfolio Manager strategy to operate more efficiently and without unnecessary delays. Applicants note that the Management Agreement will continue to be fully subject to sections 15(a) and 15(c) of the Act and rule 18f–2 under the Act.

Applicants' Conditions

Applicants agree that the requested order will be subject to the following conditions:

1. The Company will disclose in its prospectus the existence, substance and effect of any order granted pursuant to this application. In addition, each Fund and any Future Fund will hold itself out to the public as employing the management structure described in this application. The prospectus with respect to the Funds and any Future Fund will prominently disclose that the Adviser has the ultimate responsibility for the investment performance of the Funds due to the Adviser's responsibility to oversee the Portfolio Managers and recommend their hiring, termination and replacement.

2. Within 90 days of the hiring of any new Portfolio Manager, shareholders will be furnished relevant information about the new Portfolio Manager that would be contained in a proxy statement, including any change in such disclosure caused by the addition of the new Portfolio Manager. Each Fund will meet this condition by providing shareholders with an information statement meeting the requirements of Regulation 14C, Schedule 14C, and Item 22 of Schedule 14A under the Securities Exchange Act of 1934 within 90 days of the hiring of a Portfolio Manager.

3. No director or officer of the Company or director or officer of the

[1] Applicants request that the relief apply to any registered open-end investment company that in the future is advised by the Adviser or any person controlling, controlled by, or under common control (within the meaning of section 2(a)(9) of the 1940 Act) with the Adviser (a ''Future Fund''), provided that such Future Fund operates in substantially the same manner as the Company with respect to the Adviser's responsibility to select, evaluate, and supervise portfolio managers and complies with the terms and conditions of the application. All existing investment companies (and series thereof) that currently intend to rely on the order have been named as applicants.

[2] Applicants state that the manner of operation of the Funds' multi-manager system and the substance and effect of the requested order has been disclosed in the Funds' prospectus since the effective date of the Funds' Registration Statement on Form N–1A.

Adviser will own directly or indirectly (other than through a pooled investment vehicle that is not controlled by any such officer or director) any interest in a Portfolio Manager, except for (i) ownership of interests in the Adviser or any entity that controls, is controlled by or is under common control with the Adviser, or (ii) ownership of less than 1% of the outstanding securities of any class of equity or debt of a publicly-traded company that is either a Portfolio Manager or an entity that controls, is controlled by or is under common control with a Portfolio Manager.

4. The Adviser will provide general investment management and administrative services to the Funds and, subject to review and approval by the Board will (i) set the Funds' overall investment strategies; (ii) recommend Portfolio Managers; (iii) allocate and, when appropriate, reallocate the Funds' assets among Portfolio Managers; (iv) monitor and evaluate the investment performance of the Portfolio Managers; and (v) ensure that the Portfolio Managers comply with the investment objectives, policies and restrictions of the respective Funds.

5. At all times, a majority of the Board will be persons each of whom is not an ''interested person'' of the Company (as defined in Section 2(a)(19) of the Act) (the ''Independent Directors''), and the nomination of new or additional Independent Directors will be placed within the discretion of the then existing Independent Directors.

6. Neither the Company nor the Adviser will enter into a Portfolio Management Agreement for a Fund with any Affiliated Portfolio Manager without such agreement, including the compensation to be paid thereunder, being approved by the shareholders of the applicable Fund.

7. When a change of Portfolio Manager is proposed for a Fund with an Affiliated Portfolio Manager, the Board including a majority of the Independent Directors, will make a separate finding, reflected in the minutes of the meeting of the Board, that such change is in the best interests of the Fund and its shareholders and does not involve a conflict of interest from which the Adviser or the Affiliated Portfolio Manager derives an inappropriate advantage.

8. Before a Future Fund may rely on the requested order, the operation of the Fund as described in the application will be approved by the vote of a majority of the Fund's outstanding voting securities, as defined in the Act, or, in the case of a Future Fund whose public shareholders purchased shares on the basis of a prospectus containing the disclosure contemplated by condition 1, by the initial shareholders before offering shares of that Fund to the public.

For the SEC, by the Division of Investment Management, under delegated authority.

Margaret H. McFarland,

Deputy Secretary.

[FR Doc. 99–8364 Filed 4–5–99; 8:45 am]

BILLING CODE 8010–01–M

SECURITIES AND EXCHANGE COMMISSION

[Investment Company Act Release No. IC–23766, 812–11278]

Brantley Capital Corporation; Notice of Application

March 30, 1999.

AGENCY: Securities and Exchange Commission (''SEC'').

ACTION: Notice of application for an order under section 61(a)(3)(B) of the Investment Company Act of 1940 (the ''Act'').

SUMMARY OF APPLICATION: Applicant, Brantley Capital Corporation, seeks an order approving its Disinterested Director Option Plan (the ''Plan'').

FILING DATES: The application was filed on August 26, 1998 and amended on February 19, 1999. Applicant has agreed to file an amendment, the substance of which is reflected in the notice.

HEARING OR NOTIFICATION OF HEARING: An order granting the application will be issued unless the SEC orders a hearing. Interested persons may request a hearing by writing to the SEC's Secretary and serving applicant with a copy of the request, personally or by mail. Hearing requests should be received by the SEC by 5:30 p.m. on April 26, 1999, and should be accompanied by proof of service on applicant, in the form of an affidavit or, for lawyers, a certificate of service. Hearing requests should state the nature of the writer's interest, the reason for the request, and the issues contested. Persons who wish to be notified of a hearing may request notification by writing to the SEC's Secretary.

FOR FURTHER INFORMATION CONTACT: John K. Forst, Attorney Advisor, at (202) 942–0569 (Division of Investment Management, Office of Investment Company Regulation).

SUPPLEMENTARY INFORMATION: The following is a summary of the application. The complete application may be obtained for a fee at the SEC's Public Reference Branch, 450 5th Street, N.W., Washington, D.C. 20549–0102 (tel. (202) 942–8090).

Applicant's Representations

1. Applicant is a business development company (''BDC'') within the meaning of section 2(a)(48) of the Act.[1] Brantley Capital Management L.L.C., (''Brantley'') an investment adviser registered under the Investment Advisers Act of 1940 (''Advisers Act''), serves as Applicant's investment adviser. Brantley is compensated based upon a percentage of Applicant's assets, and receives no performance-based compensation. Applicant's officers receive compensation directly or indirectly from the fees paid to Brantley under the investment advisory agreement but do not receive any other cash compensation from Applicant. Applicant does not have a profit-sharing plan described in section 57(n) of the Act.

2. Applicant is managed by a board of directors (''Board'') currently consisting of nine members, six of whom are persons who are not officers or employees or otherwise considered ''interested persons'' of Applicant within the meaning of section 2(a)(19) of the Act. Every investment transaction by Applicant requires prior express approval by the Board. Applicant also relies on its directors to review and consider the best use of its resources. The directors review and evaluate reports of outstanding commitments, required reserves for follow-on financing, and funds available for future investment for the purpose of evaluating and making these resource allocations. At least once each calendar quarter, Applicant's directors review portfolio investments, including those that are non-performing or performing inadequately and evaluate Brantley's recommended course of action for Applicant under the circumstances. In addition, on a calendar quarter basis, Applicant's directors undertake a good faith valuation of Applicant's investments for which no independent market valuations are available.

3. Applicant requests an order under section 61(a)(3)(B) of the Act approving the Plan for current or future directors who at the time of issuance of the options are neither officers nor employees of Applicant (''Non-officer Directors''. Each of Applicant's No-officer Directors currently receives a monthly fee of $500 for serving on the Board and an additional $1,000 for each meeting of the Board or a committee

[1] Section 2(a)(48) defines a BDC to be any closed-end investment company that operates for the purpose of making investments in securities described in sections 55(a)(1) through 55(a)(3) of the Act and makes available significant managerial assistance with respect to the issuers of such securities.

attended. The Plan was adopted by the Board on October 21, 1996 and approved by Applicant's initial shareholders prior to the public offering on October 29, 1996. Applicant states that the Plan was disclosed in the prospectus and subsequent periodic shareholder reports. The Plan will become effective on the date it is approved by the SEC.

4. The Plan provides that (i) each of the Non-officer Directors will automatically be granted an option to purchase 2,000 shares of Applicant's common stock (the ''Shares''), upon approval of the Plan by the SEC, and (ii) immediately following Applicant's annual meeting of stockholders in 1997 and each annual meeting of stockholders of Applicant thereafter, each Non-officer Director then serving on the Board will be granted options to purchase 2,000 Shares, subject to adjustments for stock splits or combinations of Shares. A maximum of 75,000 Shares, or 2% of Applicant's outstanding shares, have been authorized for issuance under the Plan.

5. The exercise price of the options will be the greater of (a) the current market value [2] of the Shares on the date the option is granted (the ''Grant Date''), or (b) the current net asset value of the Shares. Each option will be exercisable during the period beginning twelve months after the Grant Date and ending not later than ten years after the Grant Date.

6. In the event that a Non-officer Director's services are terminated because of disability or death, the then outstanding options of the Non-officer Director will become exercisable upon the later of (a) six months after the Grant Date, and (b) the date of the termination by reason of disability or death, and thereafter may be exercised for a period of one year from the date of the termination, but in no event after the expiration date of the option. In the event that a Non-officer Director's services terminate for any reason other than disability or death, the Plan provides that the then-outstanding options of that Non-officer Director may be exercised for a period of 90 days from the date of such termination, but in no event after the stated expiration date of each option.

7. Applicant's officers and employees, including employee directors, are eligible to receive options under Applicant's stock option plan for its officers and employees (''Officer Option Plan''). Non-officer Directors are not entitled to receive stock option awards under the Officer Option Plan. The total number of shares authorized for issuance under the Officer Option Plan is 1,175,000 which represents 24% of Applicant's outstanding Shares. Applicant states that, under the Officer Option Plan, options for 325,000 Shares are currently outstanding, of which 216,667 have vested. Applicant represents and the Plan provides that the aggregate number of Shares it will issue under the Plan and the Officer Option Plan will not exceed the limits in section 61(a)(3)(C)(ii) of the Act. Applicant has no warrants, options or rights to purchase its outstanding voting securities other than those granted to its directors, officers and employees pursuant to these two Plans.

Applicant's Legal Analysis

1. Section 63(3) of the Act permits a BDC to sell its common stock at a price below current net asset value upon the exercise of any option issued in accordance with section 61(a)(3) of the Act.

2. Section 61(a)(3)(B) of the Act provides, in pertinent part, that a BDC may issue to its Non-officer Directors options to purchase its voting securities pursuant to an executive compensation plan, provided that: (a) The options expire by their terms within ten years; (b) the exercise price of the options is not less than the current market value of the underlying securities at the date of the issuance of the options, or if no market value exists, the current net asset value of the voting securities; (c) the proposal to issue the options is authorized by the BDC's shareholders, and is approved by order of the SEC upon application; (d) the options are not transferable except for disposition by gift, will or intestacy; (e) no investment adviser for the BDC receives any compensation described in paragraph (1) of section 205 of the Advisers Act, except to the extent permitted by clause (A) or (B) of that section; and (f) the BDC does not have a profit-sharing plan as described in section 57(n) of the Act.

3. In addition, section 61(a)(3)(B) of the Act provides that the amount of the BDC's voting securities that would result from the exercise of all outstanding warrants, options, and rights at the time of issuance may not exceed 25% of the BDC's outstanding voting securities, except that if the amount of voting securities that would result from the exercise of all outstanding warrants, options, and rights issued to the BDC's directors, officers, and employees pursuant to an executive compensation plan would exceed 15% of the BDC's outstanding voting securities, then the total amount of voting securities that would result from the exercise of all outstanding warrants, options, and rights at the time of issuance will not exceed 20% of the outstanding voting securities of the BDC.

4. Applicant represents that the Plan would comply with the requirements of section 61(a)(3)(B) of the Act. Applicant submits that the terms of the Plan are fair and reasonable and do not involve overreaching of Applicant or its shareholders. Applicant states that because the options may not be exercised until twelve months after the Grant Date, the Plan provides Non-officer Directors with an incentive to remain with the Applicant. In addition, Applicant states that under the Plan, the amount of stock options that would be granted, assuming the six current Non-officer Directors, would be up to 24,000 Shares in 1998 and 12,000 Shares each year commencing in 1999, or less than 1% of the Shares outstanding. Applicant asserts that the exercise of stock options pursuant to the Plan will not have a substantial dilutive effect on the net asset value of the Shares. In addition, Applicant states that the Shares underlying options outstanding under the Officer Option Plan, together with Shares underlying options that would be granted to Non-officer Directors under the Plan and Shares that would result from the exercise of any other warrants, rights or options issued by Applicant, if any, will not exceed the limits in section 61(a)(3)(C)(ii) of the Act. Applicant states that, other than stock options provided for under the Plan and the Officer Option Plan, it does not currently have outstanding warrants, options or rights to purchase its voting securities.

5. Applicant states that its directors make a significant contribution to the management of its business and to the review and supervision of its portfolio investments. Applicant states that Non-officer Directors provide it with skills and experience which are critical to its success, including the approval of each proposed investment, restructuring, follow-on financing, or disposition of an existing investment. Applicant believes that its ability to make grants of options under the Plan to Non-officer Directors provides a means of retaining the services of its current Non-officer Directors and of attracting qualified persons to serve as Non-officer Directors in the future.

[2] ''Current market value'' is defined in the Plan as the average of the closing sale prices, as reported in The Wall Street Journal, at which Shares were traded on the last five days on which trading in the Shares was reported to have taken place on the Nasdaq National Market prior to the option grant.

For the Commission, by the Division of Investment Management, pursuant to delegated authority.

Margaret H. McFarland,

Deputy Secretary.

[FR Doc. 99–8365 Filed 4–5–99; 8:45 am]

BILLING CODE 8010–01–M

SECURITIES AND EXCHANGE COMMISSION

[Release No. 34–41215; File No. SR–CBOE–99–04]

Self-Regulatory Organizations; Order Approving Proposed Rule Change by the Chicago Board Options Exchange, Inc. Relating to New Series of Options Based on the Standard and Poor's 100 Index

March 26, 1999.

I. Introduction

On January 21, 1999, the Chicago Board Options Exchange, Inc. (''CBOE'' or ''Exchange'') submitted to the Securities and Exchange Commission (''Commission'' or ''SEC''), pursuant to Section 19(b)(1) of the Securities Exchange Act of 1934 (''Act'')[1] and Rule 19b–4 thereunder,[2] a proposed rule change to change the permissible range of new series of Standard and Poor's 100 Index options (''OEX'') under unusual market conditions. Notice of the proposed rule change appeared in the **Federal Register** on February 23, 1999.[3] The Commission received no comments on the proposal. This order approves the proposed rule change.

II. Description of the Proposal

The Exchange proposes to amend CBOE Rule 24.9, Interpretation and Policy .01(d), to increase the permissible range of additional series that may be listed for OEX options during unusual market conditions. Interpretation and Policy .01(d) currently requires that when the Exchange introduces trading in a new expiration month, or when additional series of options in an existing expiration month are opened, the Exchange shall only list series of options with exercise prices that are ''reasonably related to the current value of the underlying index.'' In the case of OEX options, ''reasonably related to the current value of the underlying index'' is defined to be within eight percent of the current index value under normal market conditions. Under unusual market conditions, ''reasonably related to the current value of the underlying index'' is defined to be within ten percent of the index value. The Exchange now proposes that, for options on OEX, exercise prices within twenty percent of the current index value, instead of within ten percent, be deemed ''reasonably related to the value of the underlying index'' under unusual market conditions.

III. Discussion

After careful review, the Commission finds that the proposed rule change is consistent with the requirements of the Act and the rules and regulations thereunder applicable to a national securities exchange.[4] In particular, the Commission believes the proposal is consistent with Section 6(b)(5), in that it is designed to promote just and equitable principles of trade, to foster cooperation and coordination with persons engaged in facilitating transactions in securities, and to remove impediments to and perfect the mechanism of a free and open market and a national market system.[5]

The Commission believes that the proposal should enable the CBOE to respond to changing market conditions by listing OEX options series that provide market participants with an effective means to manage risk and implement their trading strategies. The Commission further believes that the discretion to list additional series of OEX options should help to ensure the consistent availability of index options series tailored to meet the needs of investors during periods of market volatility. Additionally, the CBOE's proposal strikes an appropriate balance between accommodating the needs of market participants and avoiding the excessive proliferation of options series.

The proposal affects only OEX options and the unusual market conditions that would trigger the availability of additional OEX series under the proposal occur infrequently. The CBOE represents that unusual market conditions occur no more than once a month on average.[6] To help determine whether unusual market conditions exist, the Exchange can look to a variety of factors and objective tools, including VIX, a volatility indicator.[7] Moreover, even when the CBOE determines that unusual market conditions exist, the Exchange explains that customer demand and market maker interest ultimately will determine how many additional series will be listed.[8] This should help to ensure adequate liquidity in new series.

In addition to representing that the number of additional series resulting from the proposal will not be significant, the CBOE does not believe that any additional series will pose a capacity problem. In this regard, the Commission notes that the Exchange retains the ability to limit new series and remove existing series. In addition, the Options Price Reporting Authority (''OPRA'') has represented that OPRA's capacity is sufficient to meet the expected demands of the additional strike prices.[9]

Accordingly, the Commission believes that the proposal should provide the Exchange with flexibility to open additional index options series and, at the same time, minimize capacity and continue to appropriately limit the number of index options series that may be outstanding at any one time. Indeed, the Exchange is not obligated to open new series every time the index value changes, and the CBOE should only open new series in a manner that is consistent with the maintenance of a fair and orderly market.

IV. Conclusion

For the foregoing reasons, the Commission believes that the proposed rule change is consistent with the Act and the rules and regulations thereunder applicable to a national securities exchange, and, in particular, with Section 6(b)(5).[10]

It is therefore ordered, pursuant to Section 19(b)(2) of the Act,[11] that the proposed rule change (SR–CBOE–99–04) is approved.

For the Commission, by the Division of Market Regulation, pursuant to delegated authority.[12]

Margaret H. McFarland,

Deputy Secretary.

[FR Doc. 99–8368 Filed 4–5–99; 8:45 am]

BILLING CODE 8010–01–M

[1] 15 U.S.C. 78s(b)(1).

[2] 17 CFR 240.19b–4.

[3] *See* Securities Exchange Act Release No. 41052 (February 12, 1999), 64 FR 8893.

[4] In approving this rule, the Commission has considered the proposed rule's impact on efficiency, competition, and capital formation. 15 U.S.C. 78c(f).

[5] 15 U.S.C. 78f(b)(5).

[6] *See* Letter from Stephanie C. Mullins, Attorney, CBOE, to Nancy Sanow, Senior Special Counsel, Division of Market Regulation, SEC, dated March 3, 1999 (''CBOE Letter'').

[7] According to the Exchange, VIX currently is at approximately 28 to 30, and unusual market conditions may occur if VIX reaches approximately 40 or above.

[8] *See* CBOE Letter, *supra* note 6.

[9] *See* CBOE Letter, *supra* note 6 and Letter from Joe P. Corrigan, Executive Director, Options Price Reporting Authority, to Stephanie C. Mullins, Attorney, Chicago Board Options Exchange, dated February 9, 1999.

[10] 15 U.S.C. 78f(b)(5).

[11] 15 U.S.C. 78s(b)(2).

[12] 17 CFR 200.30–3(a)(12).

SECURITIES AND EXCHANGE COMMISSION

[Release No. 34–41223; File No. SR–NSCC–99–03]

Self-Regulatory Organizations; National Securities Clearing Corporation; Notice of Filing and Immediate Effectiveness of a Proposed Rule Change Relating to Fees and Charges

March 29, 1999.

Pursuant to Section 19(b)(1) of the Securities Exchange Act of 1934 (''Act''),[1] notice is hereby given that on February 24, 1999, the National Securities Clearing Corporation (''NSCC'') filed with the Securities and Exchange Commission (''Commission'') the proposed rule change as described in Items I, II, and III below, which items have been prepared primarily by NSCC. The Commission is publishing this notice to solicit comments on the proposed rule change from interested persons.

I. Self-Regulatory Organization's Statement of the Terms of Substance of the Proposed Rule Change

The proposed rule change revises NSCC's fee schedule for trade comparison, trade recording, flip trades, and Fund/SERV transactions.

II. Self-Regulatory Organization's Statement of the Purpose of, and Statutory Basis for, the Proposed Rule Change

In its filing with the Commission, NSCC included statements concerning the purpose of and basis for the proposed rule change and discussed any comments it received on the proposed rule change. The text of these statements may be examined at the places specified in Item IV below. NSCC has prepared summaries, set forth in sections (A), (B), and (C) below, of the most significant aspects of such statements.[2]

(A) Self-Regulatory Organization's Statement of the Purpose of, and Statutory Basis for, the Proposed Rule Change.

NSCC's trade comparison fee for each side of each stock, warrant, or right trade submitted is $.018 per 100 shares with a minimum fee of $.072 and a maximum fee of $1.08. The proposed rule change reduces the fee for each side submitted to $.010 with the minimum fee reduced to $.040 and the maximum fee reduced $.60.

NSCC's trade recording fee for each side of each stock, warrant, or right item that is entered for settlement but not compared by NSCC is $.008 per 100 shares with a minimum fee of $.032 and a maximum fee of $.48. The proposed rule change reduces the fee for such items to $.006 per 100 shares with the minimum fee reduced to $.024 and the maximum fee reduced to $.36.

NSCC's per side fee for flip trades is $.050. The proposed rule change reduces the fee to $.025 per side.

The proposed rule change reduces NSCC's Fund/SERV transaction fee from $.30 to $.25 per side per order or transfer request.

NSCC intends to give its members the benefit of these fee changes effective as of January 1, 1999. The necessary adjustments to accommodate these reductions will be reflect in billing statements transmitted in February 1999.

NSCC believes that the proposed rule change is consistent with Section 17A(b)(3)(D) of the Act[3] and the rules and regulations thereunder because it provides for the equitable allocation of reasonable dues, fees, and other charges among NSCC's participants.

(B) Self-Regulatory Organization's Statement on Burden on Competition

NSCC does not believe that the proposed rule change will impact or impose a burden on competition.

(C) Self-Regulatory Organization's Statement on Comments on the Proposed Rule Change Received From Members, Participants, or Others

No written comments have been solicited or received. NSCC will notify the Commission of any written comments received by NSCC.

III. Date of Effectiveness of the Proposed Rule Change and Timing for Commission Action

The foregoing rule change has become effective pursuant to Section 19(b)(3)(A)(ii) of the Act[4] and pursuant to Rule 19b–4(f)(2)[5] promulgated thereunder because the proposal changes a due, fee, or other charge imposed by NSCC. At any time within sixty days of the filing of such rule change, the Commission may summarily abrogate such rule change if it appears to the Commission that such action is necessary or appropriate in the public interest, for the protection of investors, or otherwise in furtherance of the purposes of the Act.

IV. Solicitation of Comments

Interested persons are invited to submit written data, views and arguments concerning the foregoing, including whether the proposed rule change is consistent with the Act. Persons making written submissions should file six copies thereof with the Secretary, Securities and Exchange Commission, 450 Fifth Street NW., Washington, DC 20549. Copies of the submission, all subsequent amendments, all written statements with respect to the proposed rule change that are filed with the Commission, and all written communications relating to the proposed rule change between the Commission and any person, other than those that may be withheld from the public in accordance with the provisions of 5 U.S.C. 552, will be available for inspection and copying in the Commission's Public Reference Room, 450 Fifth Street, NW., Washington, DC 20549. Copies of such filing will also be available for inspection and copying at the principal office of NSCC.

All submissions should refer to File No. SR–NSCC–99–03 and should be submitted by April 27, 1999.

For the Commission by the Division of Market Regulation, pursuant to delegated authority.[6]

Margaret H. McFarland,

Deputy Secretary.

[FR Doc. 99–8366 Filed 4–5–99; 8:45 am]

BILLING CODE 8010–01–M

[1] 15 U.S.C. 78s(b)(1).

[2] The Commission has modified the text of the summaries prepared by NSCC.

[3] 15 U.S.C. 78q–1(b)(3)(D).

[4] 15 U.S.C. 78s(b)(3)(A)(ii).

[5] 17 CFR 240.19b–4(f)(2).

[6] 17 CFR 200.30–3(a)(12).

SECURITIES AND EXCHANGE COMMISSION

[Release No. 34–41222; File No. SR–OCC–99–03]

Self-Regulatory Organizations; The Options Clearing Corporation; Notice of Filing and Immediate Effectiveness of a Proposed Rule Amending Rules and By-Laws

March 29, 1999.

Pursuant to Section 19(b)(1) of the Securities Exchange Act of 1934 (''Act''),[1] notice is hereby given that on March 3, 1999, The Options Clearing Corporation (''OCC'') files with the Securities and Exchange Commission (''Commission'') the proposed rule change as described in Items I, II, and III below, which items have been prepared primarily by OCC. The

[1] 15 U.S.C. 78s(b)(1).

Commission is publishing this notice to solicit comments on the proposed rule change from interested persons.

I. Self-Regulatory Organization's Statement of the Terms of Substance of the Proposed Rule Change

The proposed rule change deletes the references to options on Government National Mortgage Association (''GNMA'') securities, options on certificates of deposit, Index Participants (''IPs''), and market baskets in OCC's rules and by-laws.

II. Self-Regulatory Organization's Statement of the Purpose of, and Statutory Basis for, the Proposed Rule Change

In its filing with the Commission, OCC included statements concerning the purpose of and basis for the proposed rule change and discussed any comments it received on the proposed rule change. The text of these statements may be examined at the places specified in Item IV below. OCC has prepared summaries, set forth in sections (A), (B), and (C) below, of the most significant aspects of such statements.[2]

(A) Self-Regulatory Organization's Statement of the Purpose of, and Statutory Basis for, the Proposed Rule Change

The proposed rule change deletes the references to options on GNMA securities, options on certificates of deposits, IPs, and market baskets in OCC's rules and by-laws. According to OCC, these products are no longer cleared, and it is unlikely that these products will be listed or cleared in the future.

OCC believes the proposed rule change is consistent with Section 17A(b)(3)(F) of the Act[3] and the rules and regulations thereunder because the proposal conforms OCC's rules and by-laws to the products that OCC currently clears.

(B) Self-Regulatory Organization's Statement on Burden on Competition

OCC does not believe that the proposed rule change would have any material adverse impact on competition.

(C) Self-Regulatory Organization's Statement on Comments on the Proposed Rule Change Received from Members, Participants, or Others

Written comments were not and are not intended to be solicited with respect to the proposed rule change and none have been received.

[2] The Commission has modified the text of the summaries prepared by OCC.

[3] 15 U.S.C. 78q–1(b)(3)(F).

III. Date of Effectiveness of the Proposed Rule Change and Timing for Commission Action

The foregoing rule change has become effective pursuant to Section 19(b)(3)(A)(iii) of Act[4] and pursuant to Rule 19b–4(f)(4)[5] promulgated thereunder because the proposal is effecting a change in an existing OCC service that does not adversely affect the safeguarding of securities or funds in OCC's custody or control or for which OCC is responsible and does not significantly affect the respective rights or obligations of OCC or persons using OCC's services. At any time within sixty days of the filing of such rule change, the Commission may summarily abrogate such rule change if it appears to the Commission that such action is necessary or appropriate in the public interest, for the protection of investors, or otherwise in furtherance of the purposes of the Act.

IV. Solicitation of Comments

Interested persons are invited to submit written data, views and arguments concerning the foregoing, including whether the proposed rule change is consistent with the Act. Persons making written submissions should file six copies thereof with the Secretary, Securities and Exchange Commission, 450 Fifth Street N.W., Washington, D.C. 20549. Copies of the submission, all subsequent amendments, all written statements with respect to the proposed rule change that are filed with the Commission, and all written communications relating to the proposed rule change between the Commission and any person, other than those that may be withheld from the public in accordance with the provisions of 5 U.S.C. 552, will be available for inspection and copying in the Commission's Public Reference Room, 450 Fifth Street, N.W., Washington, D.C. 20549. Copies of such filing will also be available for inspection and copying at the principal office of OCC. All submissions should refer to File No. SR–OCC–99–03 and should be submitted by April 27, 1999.

For the Commission by the Division of Market Regulation, pursuant to delegated authority.[6]

Margaret H. McFarland,

Deputy Secretary.

[FR Doc. 99–8367 Filed 4–5–99; 8:45 am]

BILLING CODE 8010–01–M

[4] 15 U.S.C. 78s(b)(3)(A)(iii).

[5] 17 CFR 240.19b–4(f)(4).

[6] 17 CFR 200.30–3(a)(12).

OFFICE OF THE UNITED STATES TRADE REPRESENTATIVE

Notice of Meeting of the Advisory Committee on Trade Policy and Negotiations (ACTPN)

AGENCY: Office of the United States Trade Representative.

ACTION: Notice that the April 21, 1999, meeting of the Advisory Committee for Trade Policy and Negotiations will be held from 8:00 a.m. to 1:00 p.m. The meeting will be closed to the public from 8:00 a.m. to 12:30 p.m. and open to the public from 12:30 p.m. to 1:00 p.m.

SUMMARY: The Advisory Committee for Trade Policy and Negotiations will hold a meeting on April 21, 1999 from 8:00 a.m. to 1:00 p.m. The meeting will be closed to the public from 8:00 a.m. to 12:30 p.m. The meeting will include a review and discussion of current issues which influence U.S. trade policy. Pursuant to Section 2155(f)(2) of Title 19 of the United States Code, I have determined that this meeting will be concerned with matters the disclosure of which would seriously compromise the development by the United States Government of trade policy, priorities, negotiating objectives or bargaining positions with respect to the operation of any trade agreement and other matters arising in connection with the development, implementation and administration of the trade policy of the United States. The meeting will be open to the public and press from 12:30 p.m. to 1:00 p.m. when trade policy issues will be discussed. Attendance during this part of the meeting is for observation only. Individuals who are not members of the committee will not be invited to comment.

DATES: The meeting is scheduled for April 21, 1999, unless otherwise notified.

ADDRESSES: The meeting will be held at the USTR ANNEX Building in Conference Rooms 1 and 2, located at 1724 F Street, NW, Washington, D.C., unless otherwise notified.

FOR FURTHER INFORMATION CONTACT: Ladan Manteghi, Office of the United States Trade Representative, (202) 395–6120.

Charlene Barshefsky,

United States Trade Representative.

[FR Doc 99–8349 Filed 4–5–99; 8:45 am]

BILLING CODE 3190–01–M

DEPARTMENT OF TRANSPORTATION

Office of the Secretary

Aviation Proceedings, Agreements Filed During the Week Ending March 26, 1999

The following Agreements were filed with the Department of Transportation under the provisions of 49 U.S.C. Sections 412 and 414. Answers may be filed within 21 days of date of filing.

Docket Number: OST–99–5414.
Date Filed: March 22, 1999.
Parties: Members of the International Air Transport Association.
Subject:
PTC2 ME–AFR 0027 dated 19 March 1999
Mail Vote 989
TC2 Middle East-Africa Resolutions r1–r–18
Minutes
PTC2 ME–AFR 0025 dated 5 March 1999
Tables
PTC2 ME–AFR Fares 0026 dated 23 March 1999
Intended effective date: 1 October 1999.

Docket Number: OST–99–5437.
Date Filed: March 25, 1999.
Parties: Members of the International Air Transport Association.
Subject:
PTC2 AFR 0049 dated 19 March 1999.
Mail Vote 991.
TC2 Within Africa Resolution r1–r30
Minutes
PTC2 AFR 0047 dated 2 March 1999
Tables
PTC2 AFR Fares 0023 dated 23 March 1999
Intended effective date: 1 May 1999.

Docket Number: OST–99–5439.
Date Filed: March 25, 1999
Parties: Members of the International Air Transport Association.
Subject:
PTC3 0315 dated 23 March 1999
Mail Vote 994
TC3 Resolution 085t
Introduce fares from Viet Nam to Japan
Intended effective date: 1 April 1999.

Docket Number: OST–99–5440.
Date Filed: March 25, 1999.
Parties: Members of the International Air Transport Association.
Subject:
PTC12 MEX–EUR 0024 dated 19 March 1999
Mail Vote 987
Mexico-Europe Resolutions r1–r–23
Minutes
PTC12 MEX–EUR 0023 dated 2 March 1999
Tables
PTC12 MEX–EUR FARES 0008 dated 23 March 1999
Intended effective date: 1 May 1999.

Dorothy W. Walker,
Federal Register Liaison.

[FR Doc. 99–8345 Filed 4–5–99; 8:45 am]

BILLING CODE 4910–62–P

DEPARTMENT OF TRANSPORTATION

Federal Aviation Administration

[Summary Notice No. PE–99–08]

Petitions for Exemption; Summary of Petitions Received; Dispositions of Petitions Issued

AGENCY: Federal Aviation Administration (FAA), DOT.

ACTION: Notice of petitions for exemption received and of dispositions of prior petitions.

SUMMARY: Pursuant to FAA's rulemaking provisions governing the application, processing, and disposition of petitions for exemption (14 CFR Part 11), this notice contains a summary of certain petitions seeking relief from specified requirements of the Federal Aviation Regulations (14 CFR Chapter I), dispositions of certain petitions previously received, and corrections. The purpose of this notice is to improve the public's awareness of, and participation in, this aspect of FAA's regulatory activities. Neither publication of this notice nor the inclusion or omission of information in the summary is intended to affect the legal status of any petition or its final disposition.

DATES: Comments on petitions received must identify the petition docket number involved and must be received on or before April 27, 1999.

ADDRESSES: Send comments on any petition in triplicate to: Federal Aviation Administration, Office of the Chief Counsel, Attn: Rule Docket (AGC–200), Petition Docket No. ____, 800 Independence Avenue, SW., Washington, D.C. 20591.

Comments may also be sent electronically to the following internet address: 9–NPRM–cmts@faa.gov.

The petition, any comments received, and a copy of any final disposition are filed in the assigned regulatory docket and are available for examination in the Rules Docket (AGC–200), Room 915G, FAA Headquarters Building (FOB 10A), 800 Independence Avenue, SW., Washington, D.C. 20591; telephone (202) 267–3132.

FOR FURTHER INFORMATION CONTACT: Cherie Jack (202) 267–7271 or Terry Stubblefield (202) 267–7624 Office of Rulemaking (ARM–1), Federal Aviation Administration, 800 Independence Avenue, SW., Washington, DC 20591.

This notice is published pursuant to paragraphs (c), (e), and (g) of § 11.27 of Part 11 of the Federal Aviation Regulations (14 CFR Part 11).

Issued in Washington, D.C., on March 31, 1999.

Donald P. Byrne,
Assistant Chief Counsel for Regulations.

Petitions for Exemption

Docket No.: 29484
Petitioner: National Air Transportation
Section of the FAR Affected: 14 CFR 135.213 (a) and (b)
Description of Relief Sought: To permit National Air Transportation Association air charter company members who operate turbine aircraft to use current weather reports supplied by automated means (in particular, the Automated Weather Automation System (AWOS–2)) at the airport of intended landing or to use current weather reports issued by another airport within 25 nautical miles, if additional restrictions are followed.

Dispositions of Petitions

Docket No.: CE152
Petitioner: Raytheon Aircraft Company
Sections of the FAR Affected: 14 CFR 23.775(e)
Description of Relief Sought/ Disposition: To permit Raytheon Aircraft Company type certification for operation above 25,000 feet, and up to 31,000 feet of the Raytheon Model 3000 airplane with a windshield and canopy that are not fail-safe designs in the part 23 acrobatic category.
Grant, 3/09/99, Exemption No. 6869

Docket No.: 27122
Petitioner: Air Tractor, Inc.
Sections of the FAR Affected: 14 CFR 61.31(a)(1)
Description of Relief Sought/ Disposition: To permit Air Tractor and pilots of Air Tractor AT–802 and AT–802A airplanes to operate those airplanes without holding a type rating although the maximum gross weight of the airplane exceeds 12,500 pounds.
Grant, 3/23/99, Exemption No. 5651E

Docket No.: 28660
Petitioner: The Collings Foundation
Sections of the FAR Affected: 14 CFR 91.319(a), 119.5(g), and 119.21(a)
Description of Relief Sought/ Disposition: To permit the Collings Foundation to change their jurisdictional Flight Standards District Office (FSDO) from ''NE

FSDO No. 5'' to ''NE FSDO No. 1'' because The Collings Foundation's principal base of operations is located in the jurisdictional area of the Bedford, Massachusetts, FSDO (NE FSDO No. 1) not the Portland, Maine, FSDO (NE FSDO No. 5).

Grant, 3/23/99, Exemption No. 6540B

Docket No.: 28813
Petitioner: Reeve Aleutian Airways, Inc.
Sections of the FAR Affected: 14 CFR 199.67(a)(1)
Description of Relief Sought/ Disposition: To permit Mr. Keith Campbell to serve as Director of Operations at Reeve Alleutian Airways, Inc. without holding an airline transport pilot certificate.

Grant, 2/26/99, Exemption No. 6585A

Docket No.: 28816
Petitioner: Eagle Jet Charter, Inc.
Sections of the FAR Affected: 14 CFR 119.67(a)(1) and 119.71(a)
Description of Relief Sought/ Disposition: To permit Mr. Brian N. Duehring to serve as Director of Operations at EJC without holding an airline transport pilot certificate.

Grant, 3/15/99, Exemption No. 6587A

Docket No.: 28858
Petitioner: Evergreen International Aviation, Inc.
Sections of the FAR Affected: 14 CFR 91.315, 119.5(g), and 119.21(a)
Description of Relief Sought/ Disposition: To permit EAVM to operate its former military Boeing B–17G aircraft, which has a limited category airworthiness certificate, for the purpose of carrying passengers on local flights in return for donations.

Grant, 3/12/99, Exemption No. 6632A

Docket No.: 28891
Petitioner: Kachina Aviation
Sections of the FAR Affected: 14 CFR 133.19(a)(3) and 133.51
Description of Relief Sought/ Disposition: To permit Kachina Aviation to conduct external-load operations in the United States using its Canadian-registered rotocraft.

Grant, 3/05/99, Exemption No. 6638A

Docket No.: 29360
Petitioner: Skydive City, Inc.
Sections of the FAR Affected: 14 CFR 105.43(a)
Description of Relief Sought/ Disposition: To permit SCI to allow nonstudent foreign nationals to participate in SCI-sponsored parachute jumping events held at SCI's facilities without complying with the parachute equipment and packing requirements of 105.43(a).

Grant, 2/12/99, Exemption No. 6870

Docket No.: 29375
Petitioner: CareFlight
Sections of the FAR Affected: 14 CFR 135.143(c)(2)
Description of Relief Sought/ Disposition: To permit CareFlight to operate its Bell helicopters (Registration Nos. N141CF, N142CF, N143CF, N144CF, B145CF, N147CF, N148CF, N149CF, and N1083G) without TSO–C112 (Mode S) transponders installed in each aircraft.

Grant, 3/23/99, Exemption No. 6877

Docket No.: 29400
Petitioner: Flight Line Aviation, Inc.
Section of the FAR Affected: 14 CFR 135.143(c)(2)
Description of Relief Sought/ Disposition: To permit Flight Line Aviation, Inc. to operate its Pipe PA28–151 aircraft (Registration No. N4406X, Serial No. 28–7615012) under part 135 without TSO–C112 (Mode S) transponders installed in the aircraft.

Grant, 3/23/99, Exemption No. 6874

Docket No.: 29415
Petitioner: Aberdeen Flying Service
Section of the FAR Affected: 14 CFR 135.143(c)(2)
Description of Relief Sought/ Disposition: To permit Aberdeen Flying Service to operate certain under the provisions of part 135 without TSO–C112 (Mode S) transponders installed.

Grant, 3/23/99, Exemption No. 6875

Docket No.: 29450
Petitioner: Business Airfreight
Section of the FAR Affected: 14 CFR 135.143(c)(2)
Description of Relief Sought/ Disposition: To permit Business Airfreight to operate certain under part 135 without TSO–C112 (Mode S) transponders installed in each aircraft.

Grant, 3/23/99, Exemption No. 6876

[FR Doc. 99–8418 Filed 4–5–99; 8:45 am]
BILLING CODE 4910–13–M

DEPARTMENT OF TRANSPORTATION

Federal Aviation Administration

Commercial Space Transportation Advisory Committee—Open Meeting

AGENCY: Federal Aviation Administration (FAA), DOT.

ACTION: Notice of Commercial Space Transportation Advisory Committee open meeting.

SUMMARY: Pursuant to Section 10(a)(2) of the Federal Advisory Committee Act (Pub. L. 92–463, 5 U.S.C. App. 2), notice is hereby given of a meeting of the Commercial Space Transportation Advisory Committee (COMSTAC). The meeting will take place on Thursday, May 6, 1999, from 8:00 a.m. to 1:00 p.m. in Room 2230, Department of Transportation Headquarters, 400 7th Street SW, in Washington, DC. This will be the twenty-ninth meeting of the COMSTAC.

The agenda for the meeting will include reports from the COMSTAC Working Groups; a legislative update on Congressional activities involving commercial space transportation; an activities report from FAA's Associate Administrator for Commercial Space Transportation (formerly the Office of Commercial Space Transportation [60 FR 62762, December 7, 1995]); a report from the Office of Science and Technology Policy regarding a newly-initiated interagency working group for commercial space issues; and a briefing on an upcoming review of commercial space transportation policy issues by COMSTAC member, Dr. John Logsdon from George Washington University. The meeting is open to the public; however, space is limited.

Meetings of the Technology and Innovation, Reusable Launch Vehicle, and Risk Management Working Groups will be held on Wednesday, May 5, 1999. For specific information concerning the times and locations of these meetings, contact the Contact Person listed below.

Individuals who plan to attend and need special assistance, such as sign language interpretation or other reasonable accommodations, should inform the Contact Person listed below in advance of the meeting.

FOR FURTHER INFORMATION CONTACT: Brenda Parker (AST–200), Office of the Associate Administrator for Commercial Space Transportation (AST), 800 Independence Avenue SW, Room 331, Washington, DC 20591, telephone (202) 267–8308.

Dated: March 29, 1999.

Patricia G. Smith,

Associate Administrator for Commercial Space Transportation.

[FR Doc. 99–8415 Filed 4–5–99; 8:45 am]
BILLING CODE 4910–13–P

DEPARTMENT OF TRANSPORTATION

Federal Aviation Administration

Research, Engineering and Development (R,E&D) Advisory Committee

Pursuant to section 10(A)(2) of the Federal Advisory Committee Act (Pub. L. 92–463; 5 U.S.C. App. 2), notice is hereby given of a meeting of the FAA

Research, Engineering and Development (R,E&D) Advisory Committee on Wednesday, April 21. The meeting will be held at the Holiday Inn Rosslyn Westpark Hotel, 1900 North Fort Myer Drive, Arlington, Virginia.

On Wednesday, April 21 the meeting will begin at 8:00 a.m. and end at 3:30 p.m.

The Federal Aviation Administration will present its Fiscal Year 2001–2005 research and development portfolio. The Committee will provide recommendations on the portfolio in the areas of air traffic services, airports, aircraft safety, security, human factors and environment and energy.

Attendance is open to the interested public but limited to space available. Persons wishing to attend the meeting or obtain information should contact Lee Olson at the Federal Aviation Administration, AAR–200, 800 Independence Avenue, SW, Washington, DC 20591, (202) 267–7358.

Members of the public may present a written statement to the Committee at any time.

Issued in Washington, DC on March 30, 1999.

Jan Brecht-Clark,

Deputy Director, Office of Aviation Research.

[FR Doc. 99–8419 Filed 4–5–99; 8:45 am]

BILLING CODE 4910–13–M

DEPARTMENT OF TRANSPORTATION

Federal Aviation Administration

Intent To Rule on Application To Use the Revenue From a Passenger Facility Charge (PFC) at Chicago O'Hare International Airport, Chicago, Illinois

AGENCY: Federal Aviation Administration (FAA), DOT.

ACTION: Notice of intent to rule on application.

SUMMARY: The FAA proposes to rule and invites public comment on the application to use the revenue from a PFC at Chicago O'Hare International Airport under the provisions of the Aviation Safety and Capacity Expansion Act of 1990 (Title IX of the Omnibus Budget Reconciliation Act of 1990) (Public Law 101–508) and Part 158 of the Federal Aviation Regulations (14 CFR Part 158).

DATES: Comments must be received on or before May 6, 1999.

ADDRESSES: Comments on this application may be mailed or delivered in triplicate to the FAA at the following address: Federal Aviation Administration, Chicago Airports District Office, 2300 East Devon Avenue, Room 201, Des Plaines, Illinois 60018.

In addition, one copy of any comments submitted to the FAA must be mailed or delivered to Ms. Mary Rose Loney, Commissioner, of the City of Chicago Department of Aviation at the following address: Chicago O'Hare International Airport, P.O. Box 66142, Chicago, Illinois 60666.

Air carriers and foreign air carriers may submit copies of written comments previously provided to the City of Chicago Department of Aviation under section 158.23 of Part 158.

FOR FURTHER INFORMATION CONTACT: Mr. Mark A. McClardy, Acting Manager, Chicago Airports District Office, 2300 East Devon Avenue, Room 201, Des Plaines, Illinois 60018, (847) 294–7335. The application may be reviewed in person at this same location.

SUPPLEMENTARY INFORMATION: The FAA proposes to rule and invites public comment on the application to use the revenue from a PFC at Chicago O'Hare International Airport under the provisions of the Aviation Safety and Capacity Expansion Act of 1990 (Title IX of the Omnibus Budget Reconciliation Act of 1990) (Public Law 101–508) and Part 158 of the Federal Aviation Regulations (14 CFR Part 158).

On March 4, 1999, the FAA determined that the application to use the revenue from a PFC submitted by the City of Chicago Department of Aviation was substantially complete within the requirements of section 158.25 of Part 158. The FAA will approve or disapprove the application, in whole or in part, no later than June 4, 1999.

The following is a brief overview of the application.

PFC application number: 99–10–U–00–ORD
Level of the proposed PFC: $3.00
Original charge effective date: September 1, 1993
Estimated charge expiration date: October 1, 2018
Total estimated PFC revenue: $84,370,000.00
Brief description of proposed project:
a. Explosive Blast Mitigation—Phase II
b. Acquire 12 Airport Transit System Vehicles
c. Bessie Coleman Bridge Rehabilitation
d. Lake O'Hare Capacity Enhancement
e. Runway 9L/27R Rehabilitation
f. Perimeter Intrusion Detection System
g. Taxiway B Rehabilitation at C3/C4

Class or classes of air carriers which the public agency has requested not be required to collect PFCs: Air Taxi Operators.

Any person may inspect the application in person at the FAA office listed above under **FOR FURTHER INFORMATION CONTACT**.

In addition, any person may, upon request, inspect the application, notice and other documents germane to the application in person at the City of Chicago Department of Aviation.

Issued in Washington, DC on March 31, 1999.

Eric Gabler,

Manager, Passenger Facility Charge Branch.

[FR Doc. 99–8416 Filed 4–5–99; 8:45 am]

BILLING CODE 4910–13–M

DEPARTMENT OF TRANSPORTATION

Federal Aviation Administration

Notice of Intent to Rule on Application to Impose a Passenger Facility Charge (PFC) at Cleveland Hopkins International Airport, and to Use the Revenue at Cleveland Hopkins International Airport and Burke Lakefront Airport, Cleveland, Ohio

AGENCY: Federal Aviation Administration (FAA), DOT.

ACTION: Notice of Intent to Rule on Application.

SUMMARY: The FAA proposes to rule and invites public comment on the application to impose a PFC at Cleveland Hopkins International Airport and to use the revenue at Cleveland Hopkins International Airport and Burke Lakefront Airport under the provisions of the Aviation Safety and Capacity Expansion Act of 1990 (Title IX of the Omnibus Budget Reconciliation Act of 1990) (Public Law 101–508) and Part 158 of the Federal Aviation Regulations (14 CFR Part 158).

DATES: Comments must be received on or before May 6, 1999.

ADDRESSES: Comments on this application may be mailed or delivered in triplicate to the FAA at the following address: Federal Aviation Administration, Detroit Airports District Office, Willow Run Airport, East, 8820 Beck Road, Belleville, Michigan 48111.

In addition, one copy of any comments submitted to the FAA must be mailed or delivered to Solomon F. Balraj, Director of the Department of Port Control at the following address: Department of Port Control, Cleveland Hopkins International Airport, 5300 Riverside Drive, Cleveland, Ohio 44135–3193.

Air carriers and foreign air carriers may submit copies of written comments previously provided to the Department of Port Control under section 158.23 of Part 158.

FOR FURTHER INFORMATION CONTACT: Mr. Robert L. Conrad, Program Manager, Federal Aviation Administration, Detroit Airports District Office, Willow Run Airport, East, 8820 Beck Road, Belleville, Michigan 48111 (734–487–7295). The application may be reviewed in person at this same location.

SUPPLEMENTARY INFORMATION: The FAA proposes to rule and invites public comment on the application to impose a PFC at Cleveland Hopkins International Airport and to use the revenue at Cleveland Hopkins International Airport and Burke Lakefront Airport under the provisions of the Aviation Safety and Capacity Expansion Act of 1990 (Title IX of the Omnibus Budget Reconciliation Act of 1990) (Public Law 101–508) and Part 158 of the Federal Aviation Regulations (14 CFR Part 158).

On March 1, 1999, the FAA determined that the application to impose and use the revenue from a PFC submitted by City of Cleveland was substantially complete within the requirements of section 158.25 of Part 158. The FAA will approve or disapprove the application, in whole or in part, no later than May 29, 1999.

The following is a brief overview of the application.

PFC Application No.: 99–06–C–00–CLE
Level of the proposed PFC: $3.00
Proposed charge effective date: June 1, 1999
Proposed charge expiration date: April 1, 2008
Total estimated PFC revenue: $185,919,856.00
Brief description of proposed projects:

Proposed Impose and Use Projects

Cleveland Hopkins

Brook Park Land Transfer; Residential Sound Insulation; Expand Baggage Claim; Reconstruct Tug Road; Extend Runway 5R/Preliminary Engineering; New Federal Inspection Services Facility/Design; Commuter Ramp; Concourse D Ramp.

Burke Lakefront Airport

Overlay Runway 6L/24R; Install ILS.

Impose Only Projects

Cleveland Hopkins

Extend Runway 5R/Design and Construct; Federal Inspection Services Facility/Construct; Analex Office Building/Demolish.

Class or classes of air carriers which the public agency has requested not be required to collect PFCs: Air Taxi/Commercial Operators.

Any person may inspect the application in person at the FAA office listed above under **FOR FURTHER INFORMATION CONTACT**.

In addition, any person may, upon request, inspect the application, notice, and other documents germane to the application in person at the Department of Port Control, Cleveland Hopkins International Airport.

Issued in Washington, D.C. on March 31, 1999.

Eric Gabler,

Manager, Passenger Facility Charge Branch.

[FR Doc. 99–8420 Filed 4–5–99; 8:45 am]

BILLING CODE 4910–13–M

DEPARTMENT OF TRANSPORTATION

Federal Aviation Administration

Notice of Intent To Rule on Application To Impose and Use the Revenue From a Passenger Facility Charge (PFC) at the University of Illinois-Willard Airport, Savoy, IL

AGENCY: Federal Aviation Administration (FAA), DOT.

ACTION: Notice of intent to rule on application.

SUMMARY: The FAA proposes to rule and invites public comment on the application to impose and use the revenue from a PFC at University of Illinois-Willard Airport under the provisions of the Aviation Safety and Capacity Expansion Act of 1990 (Title IX of the Omnibus Budget Reconciliation Act of 1990) (Public Law 101–508) and Part 158 of the Federal Aviation Regulations (14 CFR Part 158).

DATES: Comments must be received on or before May 6, 1999.

ADDRESSES: Comments on this application may be mailed or delivered in triplicate to the FAA at the following address: Federal Aviation Administration, Chicago Airports District Office, 2300 East Devon Avenue, Room 201, Des Plaines, Illinois 60018.

In addition, one copy of any comments submitted to the FAA must be mailed or delivered to Mr. Joe Attwood, Airport Manager, University of Illinois-Willard Airport at the following address: University of Illinois-Willard Airport #77 Airport Road, Savoy, Illinois 61874.

Air carriers and foreign air carriers may submit copies of written comments previously provided to the University of Illinois-Willard Airport under section 158.23 of Part 158.

FOR FURTHER INFORMATION CONTACT: Mr. Gary K. Regan, Program Manager, Chicago Airports District Office, 2300 East Devon Avenue, Room 201, Des Plaines, Illinois 60018, (847) 294–7525. The application may be reviewed in person at this same location.

SUPPLEMENTARY INFORMATION: The FAA proposes to rule and invites public comment on the application to impose and use the revenue from a PFC at University of Illinois-Willard Airport under the provisions of the Aviation Safety and Capacity Expansion Act of 1990 (Title IX of the Omnibus Budget Reconciliation Act of 1990) (Public Law 101–508) and Part 158 of the Federal Aviation Regulations (14 CFR Part 158).

On March 1, 1999, the FAA determined that the application to impose and use the revenue from a PFC submitted by the University of Illinois-Willard Airport was substantially complete within the requirements of section 158.25 of Part 158. The FAA will approve or disapprove the application, in whole or in part, no later than June 14, 1999.

The following is a brief overview of the application.

PFC application number: 99–02–C–00–CMI
Level of the proposed PFC: $3.00
Proposed charge effective date: November 1, 1999
Proposed charge expiration date: April 1, 2003
Total estimated PFC revenue: $1,418,400.00
Brief description of proposed projects:

a. North Quadrant Site Development, Phase I
b. PFC Application Reimbursement
c. Phase 5, Rehabilitation of RW 14R/32L
d. Airport Layout Plan Update (with Noise Analysis)
5e. Airfield Lighting Improvements, Phase 1
f. Acquire Snow Removal Equipment, Rotary Broom
g. North Quadrant Site Development, Phase 2
h. Acquire ARFF Vehicle
i. Acquire Snow Removal Equipment, Truck and Plow
j. Acquire ADA Passenger Lift Device
k. Airfield Lighting Improvements, Phase 2
l. Security Fencing, Phase 1
m. Construct Exit Taxiway, RW 14R/32L
n. Security Fencing, Phase 2
o. Security Fencing, Phase 3
p. Terminal Security System Revisions

Class or classes of air carriers which the public agency has requested not be required to collect PFCs: Air Taxi/Commercial Operators.

Any person may inspect the application in person at the FAA office

listed above under **FOR FURTHER INFORMATION CONTACT**.

In addition, any person may, upon request, inspect the application, notice and other documents germane to the application in person at the University of Illinois-Willard Airport.

Issued in Washington, DC on March 31, 1999.

Eric Gabler,

Manager, Passenger Facility Charge Branch.

[FR Doc. 99–8417 Filed 4–5–99; 8:45 am]

BILLING CODE 4910–13–M

DEPARTMENT OF TRANSPORTATION

Federal Railroad Administration

[Docket No. RSAC–91–1, Notice No. 16]

Railroad Safety Advisory Committee; Notice of Meeting

AGENCY: Federal Railroad Administration (FRA), Department of Transportation (DOT).

ACTION: Notice of Railroad Safety Advisory Committee (''RSAC'') meeting.

SUMMARY: FRA announces the next meeting of the RSAC, a Federal Advisory Committee that develops railroad safety regulations through a consensus process. The meeting will address a wide range of topics, including possible adoption of specific recommendations for regulatory action.

DATES: The meeting of the RSAC is scheduled to commence at 9:30 a.m. and conclude at 4:00 p.m. on Thursday, April 15, 1999.

ADDRESSES: The meeting of the RSAC will be held at The Wyndham Hotel, 1400 M Street NW, Washington, DC. The meeting is open to the public on a first-come, first-served basis and is accessible to individuals with disabilities. Sign language interpreters will be available for individuals with hearing impediments.

FOR FURTHER INFORMATION CONTACT: Vicky McCully, RSAC Coordinator, FRA, 400 7th Street, SW, Stop 25, Washington, D.C. 20590, (202) 493–6305 or Grady Cothen, Deputy Associate Administrator for Safety Standards and Program Development, FRA, 400 7th Street, SW, Stop 25, Washington, D.C. 20590, (202) 493–6302.

SUPPLEMENTARY INFORMATION:

Pursuant to section 10(a)(2) of the Federal Advisory Committee Act (Pub. L. 92–463), FRA is giving notice of a meeting of the Railroad Safety Advisory Committee (''RSAC''). The meeting is scheduled to begin at 9:30 a.m. and conclude at 4:00 p.m. on Thursday, April 15, 1999. The meeting will be held at The Wyndham Hotel, 1400 M Street, NW, Washington, DC. All times noted are Eastern Standard Time.

RSAC was established to provide advice and recommendations to the FRA on railroad safety matters. The Committee consists of 48 individual representatives, drawn from among 27 organizations representing various rail industry perspectives, and 2 associate non-voting representatives from the agencies with railroad safety regulatory responsibility in Canada and Mexico. Staff of the National Transportation Safety Board and Federal Transit Administration also participate in an advisory capacity.

During this meeting, the Cab Working Conditions Working Group will brief the RSAC on the primary elements of its recommendations for a proposed standard for locomotive sanitary conditions. The Working Group will also provide a status report on recommendations for hearing conservation program requirements for locomotive cab employees.

The Track Safety Working Group will present an overview of its proposed recommendations for amendments to the Track Safety Standards to provide for the use of Gage Restraint Measurement System (GRMS) technology and its proposed standards relating to the safety of persons operating maintenance-of-way equipment.

The Locomotive Crashworthiness Working Group intends to present to the RSAC for consideration, recommended standards for freight, passenger and switching locomotives.

The RSAC will receive a status report from the Accident/Incident Working Group, tasked with evaluating the concept of a reportable train accident, specifically the means by which the railroad property damage threshold is calculated.

A report providing status information will be presented by the Positive Train Control (PTC) Working Group, tasked with: (1) facilitating understanding of current PTC technologies, definitions, and capabilities; (2) addressing issues regarding the feasibility of implementing fully integrated PTC systems; and (3) facilitating implementation of software based signal and operating systems through consideration of revisions to the Rules, Standards and Instructions to address processor-based technology and communication-based architectures.

Please refer to the notice published in the **Federal Register** on March 11, 1996 (61 FR 9740) for more information about the RSAC.

Issued in Washington, D.C. on March 30, 1999.

George A. Gavalla,

Acting Associate Administrator for Safety.

[FR Doc. 99–8424 Filed 4–5–99; 8:45 am]

BILLING CODE 4910–06–M

DEPARTMENT OF TRANSPORTATION

Federal Transit Administration

Environmental Impact Statement on the I–71 Light Rail Transit Project in the Cincinnati/Northern Kentucky Region

AGENCY: Federal Transit Administration, DOT.

ACTION: Notice of Intent to prepare an Environmental Impact Statement (EIS).

SUMMARY: The Federal Transit Administration (FTA) (the Federal lead agency) and the Ohio-Kentucky-Indiana Regional Council of Governments (OKI), the Metropolitan Planning Organization (MPO) for the Cincinnati region (the local lead agency), intend to prepare an Environmental Impact Statement (EIS) for the I–71 Light Rail Transit Project. In March of 1998, OKI completed a Major Investment Study (MIS) which studied four alternatives for the I–71 Corridor: Light Rail Transit, No-Build, Transportation Systems Management (TSM), Busway and High Occupancy Vehicle Lanes. The OKI selected the Light Rail Transit as the Locally Preferred Strategy.

The EIS is being prepared in conformance with the National Environmental Policy Act (NEPA) and will also satisfy the requirements of the 1990 Clean Air Act Amendments (CAAA). The EIS will evaluate the following transportation alternatives: a No-Build Alternative, a Transportation Systems Management (TSM) Alternative, and the Light Rail Transit (LRT) Alternative. Key stakeholders include the Ohio Department of Transportation (ODOT), the Kentucky Transportation Cabinet (KYTC), Southwest Ohio Regional Transit Authority (SORTA), Transit Authority of Northern Kentucky (TANK), Hamilton County, Kenton County, and the cities of Cincinnati, Covington, Blue Ash, and Montgomery.

DATES: *Comment Due Date:* Written comments on the scope of alternatives and impacts to be considered must be postmarked by June 15, 1999. *Scoping Meetings:* Public Scoping Meetings will be held on: May 10th—Monday 5 p.m. to 8 p.m. at the Evanston Recreation Center, 3204 Wooburn Avenue, Cincinnati, OH; May 11th—Tuesday 11

a.m. to 1:30 p.m. at the Christ Church Undercroft, 318 East Fourth Street, Cincinnati, OH; May 12th—Wednesday 5 p.m. to 8 p.m. at Blue Ash City Council Chambers, 4343 Cooper Road, Blue Ash, OH; and on May 18th—Tuesday 5 p.m. to 8 p.m. at the City of Covington, City Commission Chambers, 638 Madison Avenue, Covington, KY.

ADDRESSES: Written comments should be sent to Mr. Warner Moore, Project Manager, Ohio-Kentucky-Indiana Regional Council of Governments, 801–B West Eighth Street, Suite 400, Cincinnati, OH 45203–1607.

SCOPING PROCESS: The purposes of the Public Scoping Meetings are to: Provide interested individuals with an introduction to and an overview of the EIS process, and provide the opportunity for comments on the alternatives being considered and significant issues or impacts to be addressed in the EIS. Four Public Scoping Meetings will be held in the study area. Comments may be submitted orally at any of the Scoping Meetings or in writing during the Scoping comment period for the preparation of the Draft Environmental Impact Statement (DEIS) which ends on June 15, 1999. The Scoping Meetings will begin at 11 a.m. for the lunch-time meeting in the downtown Cincinnati and at 5 p.m. for evening meetings. Each meeting will include an open house where attendees will be able to view graphics and discuss the project with project representatives. A presentation on the project will be given at 12 p.m. for lunch-time meeting and at 6 p.m. for the evening meetings, followed by an additional opportunity for questions and answers during both the lunch-time and evening meetings. Scoping material will be available at the meeting or in advance of the meeting by contacting Mr. Jeff Walker, Planner II, at (513) 621–6300 or the TDD number at (513) 621–7063. A sign language interpreter will be available for the hearing impaired. The buildings are accessible to people with disabilities and are open to all members of the community.

FOR FURTHER INFORMATION CONTACT: Mr. Paul Fish, Federal Transit Administration, Region V, (312) 353–2865.

SUPPLEMENTARY INFORMATION:

I. Scoping

The FTA and OKI invite interested individuals, organizations, and federal, state and local agencies to participate in defining the alternatives to be evaluated in the EIS; identifying any significant social, economic, or environmental impacts to be evaluated; and suggesting alternatives that are less costly or have less environmental impacts while achieving similar transportation objectives. An information packet, referred to as the Scoping Booklet, will be circulated to all federal, state or local agencies having jurisdiction in the project, and all interested parties currently on the OKI mailing list. Others may request this Scoping Booklet by contacting Mr. Jeff Walker, Planner II, Ohio-Kentucky-Indiana Regional Council of Governments, 801–B West Eighth Street, Suite 400, Cincinnati, OH 45203–1607, or by phone at (513) 621–6300 or TDD at (513) 621–7063.

During Scoping, comments should focus on identifying the range of alternatives that should be considered and not stating a preference for a particular alternative. Scoping comments may be made at the Public Scoping Meeting or in writing within 45 days after publication of this notice. See the DATES section above for the locations and times of the Scoping Meetings and the ADDRESSES section above for the contact person for sending in written comments.

II. Description of the Study Area and Project

The study area is a north-south corridor which is approximately 18 miles long and generally parallels Interstate-71 (I–71). The LRT Alternative would extend from the south side of downtown Covington, Kentucky, through the downtown area of Covington, across the Ohio River into downtown Cincinnati, through a tunnel under Mount Auburn, through the Medical Center and the University of Cincinnati area, north to the City of Norwood where it will meet the SORTA right-of-way (on which the Indiana-Ohio Railroad previously owned and currently operates), and north to serve Silverton, Kenwood, Deer Park, Montgomery and Blue Ash. A yard and shop facility will be located somewhere along the length of the alignment.

Double-track light rail transit construction is being studied with in-street running in downtown areas and ballast tracks within the exclusive railroad right-of-way north of Cincinnati. The Clay Wade Bailey Bridge corridor will be examined during the Scoping Process to determine its potential for the Ohio River crossing. The study includes a proposal for approximately 20 stations to be designed for pedestrians as well as both bus and park-and-ride access. The LRT project is intended to provide fixed rail service between key activity centers in Cincinnati and Covington, including both cities' downtown districts, the Northern Kentucky Convention Center, the Aranoff Theatre District, the Medical Center, University of Cincinnati, Xavier University, the Cincinnati Bengal's Paul Brown Stadium, the new Cincinnati Reds Baseball Stadium, the Underground Railroad Freedom Center and the Cincinnati Convention Center. Key employers along the proposed alignment include the IRS Regional Center, Procter & Gamble World Headquarters, Proctor & Gamble Sharon Woods Technical Center, Chiquita Brands International, Cinergy Corporation/Cincinnati Gas & Electric Company, the Kroger Company, the American Financial Group, Inc., Cincinnati Bell, Ethicon Endo-Surgery, Hamilton County, Kenton County, and the Cities of Covington and Cincinnati Administrative Offices and City/County Court systems.

The I–71 Corridor has been and continues to be an area of significant growth for the region. Traffic congestion on many of the corridor's roadways is currently at unacceptable levels and is expected to worsen with the projected employment and population growth. Low-income, transit-dependent populations are increasing in the region, along with the need for improved access to jobs. Both riverfront areas of Covington and Cincinnati are experiencing tremendous public and private sector investment in the economic development and revitalization of the central cities. These redevelopment efforts, which will focus employment, entertainment, recreation and tourism on the riverfront area, will place a greater demand on existing roadways and transit service.

In response to this need, OKI conducted an MIS for the I–71 corridor. The results of the MIS study included the selection of a locally preferred strategy of a light rail transit system with downtown and suburban stops along the alignment, including stations, park-and-ride lots and transit centers. Transit improvements are intended to alleviate traffic congestion in the I–71 corridor by offering an alternative to single-occupancy vehicle travel, and assisting in the achievement of regional air quality goals.

III. Alternatives

The transportation alternatives proposed for consideration in this I–71 Light Rail Transit Project Draft EIS include:

(1) No-Build Alternative, which involves no change to transportation services or facilities in the corridor beyond already committed projects;

(2) Transportation System Management (TSM) Alternative which

consists of low to medium cost improvements to the facilities and operation of the METRO and TANK bus systems in addition to the currently planned transit improvements in the corridor; and

(3) Light Rail Alternative, including stations and support facilities, generally located parallel to the I–71 corridor and on surface streets in downtown Covington and Cincinnati combined with a modified bus service component. Stations would be located to serve potentially significant trip generators and in areas where economic development efforts are planned or underway in order to maximize potential joint development opportunities.

IV. Probable Effects

The FTA and OKI will evaluate significant environmental, social, and economic impacts of the alternatives analyzed in the EIS. Primary environmental issues include: land-use, historic and archeological resources, traffic and parking, noise and vibration, neighborhoods and environmental justice, floodplain encroachment, coordination with ongoing related transportation and economic development projects, and construction impacts. Other issues the EIS will address include natural areas, rare and endangered species, air and water quality, groundwater, energy, potentially contaminated sites, displacements and relocations, ecosystems, water resources, hazardous waste, parklands, and energy impacts. The impacts will be evaluated both for the construction period and for the long-term period of operation of each alternative. In addition, the cumulative effects of the proposed project and any irreversible or irretrievable commitment of resources will be identified. Measures to avoid or mitigate any significant adverse impacts will be developed.

V. FTA Procedures

In accordance with the federal transportation planning regulations (23 CFR part 450) and the federal environmental impact regulations and related procedures (23 CFR part 771), the DEIS will be prepared to include an evaluation of the social, economic, and environmental impacts of the alternatives. The LRT Alternative was chosen as the Locally Preferred Strategy of the Major Investment Study completed in March of 1998. The project is included in the OKI Metropolitan Area Transportation Plan and conforming Transportation Improvement Program. The EIS and the Preliminary Engineering (PE) for the I–71 LRT PE/EIS will be prepared simultaneously and documented in the DEIS. The Final EIS will consider the public and agency comments received during the public and agency circulation of the Draft Environmental Impact Statement, and OKI will select the Preferred Alternative. Then OKI, with FTA as lead agency, will continue with the preparation of the Final EIS. Opportunity for additional public comment will be provided throughout all phases of project development.

Issued on: April 1, 1999.

Joel P. Ettinger,

Regional Administrator, Federal Transit Administration.

[FR Doc. 99–8478 Filed 4–5–99; 8:45 am]

BILLING CODE 4910–57–P

DEPARTMENT OF TRANSPORTATION

Surface Transportation Board

[STB Finance Docket No. 33720]

Union Pacific Railroad Company—Trackage Rights Exemption—Blue Rapids Railway Company

Blue Rapids Railway Company (BRRC) has agreed to grant local trackage rights to Union Pacific Railroad Company (UP) over its line of railroad, known as the Bestwall Branch, extending from a UP junction at milepost 0.12 at Marysville to milepost 10.12 at Bestwall, a distance of 10 miles in Marshall County, KS.

The purpose of the trackage rights is to allow continued service on the line when the incumbent tenant withdraws.[1] The transaction is scheduled to be consummated upon receipt of authority in the related proceeding, STB Finance Docket No. 33652.

As a condition to this exemption, any employees affected by the trackage rights will be protected by the conditions imposed in *Norfolk and Western Ry. Co.—Trackage Rights—BN,* 354 I.C.C. 605 (1978), as modified in *Mendocino Coast Ry.,* Inc.—Lease and Operate, 360 I.C.C. 653 (1980).

This notice is filed under 49 CFR 1180.2(d)(7). If it contains false or misleading information, the exemption is void *ab initio.* Petitions to revoke the exemption under 49 U.S.C. 10502(d) may be filed at any time. The filing of a petition to revoke will not automatically stay the transaction.

An original and 10 copies of all pleadings, referring to STB Finance Docket No. 33720, must be filed with the Surface Transportation Board, Office of the Secretary, Case Control Unit, 1925 K Street, NW, Washington, DC 20423–0001. In addition, a copy of each pleading must be served on Joseph D. Anthofer, Esq., 1416 Dodge Street, #830, Omaha, NE 68179.

Board decisions and notices are available on our website at ''WWW.STB.DOT.GOV.''

Decided: March 30, 1999.

By the Board, David M. Konschnik, Director, Office of Proceedings.

Vernon A. Williams,

Secretary.

[FR Doc. 99–8325 Filed 4–5–99; 8:45 am]

BILLING CODE 4915–00–P

[1] There is one shipper on the line located at Bestwall. The line is currently operated by Northeast Kansas & Missouri Division of Mid-Michigan Railroad, Inc. (NEKM), under a local trackage rights agreement, which is to be assigned to UP pursuant to this exemption. In a related proceeding, *Union Pacific Railroad Company—Acquisition and Operation Exemption—Mid Michigan Railroad, Inc.,* STB Finance Docket No. 33652. UP seeks to acquire and operate the main line extending from St. Joseph, MO, to Upland KS, near Maryville. That petition will be addressed by the Board in a separate decision.

DEPARTMENT OF THE TREASURY

Commission to Study Capital Budgeting (Advisory Commission to the President of the United States)

ACTION: Release of Final Report to the Public.

SUMMARY: The President's Commission to Study Capital Budgeting has released its final report to the public following the report's presentation to the National Economic Council on Tuesday, March 23, 1999. The report may be viewed at: http://www.whitehouse.gov/pcscb, the Commission website. Hard copies of the report may be obtained from the Superintendent of Documents, PO Box 371954, Pittsburgh, PA 15250–7954, at a cost of US$6 (US$7.50 to foreign addresses) per copy. Please provide the order number S/N 048–000–00524–1, full name, address, and daytime phone number with area code. Payment may be by check, GPO deposit account, VISA, Master Card, or Discover/NOVUS. Please provide card number, expiration date, and authorizing signature. Orders also may be filled by phone at (202) 512–1800, FAX to (202) 512–2250, or at any of the Government Printing Office (GPO) outlets.

The Commission contact is: Dick Emery, Executive Director, President's Commission to Study Capital Budgeting, Old Executive Office Building (Room 258), Washington, DC 20503, Voice: (202) 395–4630, Fax: (202) 395–6170, E-Mail: capital__budget@omb.eop.gov Website: http://www.whitehouse.gov/pcscb.

FOR FURTHER INFORMATION CONTACT: E. William Dinkelacker, Ph.D., Designated Federal Official, Room 4456 Main Treasury, Washington, DC 20220, Voice: (202) 622–1285, Fax: (202) 622–1294, E-Mail: william.dinkelacker@do.treas.gov.

Angel E. Ray,

Committee Management Officer.

[FR Doc. 99–8495 Filed 4–5–99; 8:45 am]

BILLING CODE 4810–25–P

DEPARTMENT OF THE TREASURY

Customs Service

List of Foreign Entities Violating Textile Transshipment and Country of Origin Rules

AGENCY: Customs Service, Department of the Treasury.

ACTION: General notice.

SUMMARY: This document notifies the public of foreign entities which have been issued a penalty claim under section 592 of the Tariff Act, for certain violations of the customs laws. This list is authorized to be published by section 333 of the Uruguay Round Agreements Act.

FOR FURTHER INFORMATION CONTACT: For information regarding any of the operational aspects, contact Scott Greenberg, National Seizures and Penalties Officer, Seizures and Penalties Division, Office of Field Operations, (415) 782–9442. For information regarding any of the legal aspects, contact Ellen McClain, Office of Chief Counsel, at 202–927–6900.

SUPPLEMENTARY INFORMATION:

Background

Section 333 of the Uruguay Round Agreements Act (URAA) (Public Law 103–465, 108 Stat. 4809) (signed December 8, 1994), entitled Textile Transshipments, amended Part V of title IV of the Tariff Act of 1930 by creating a section 592A (19 U.S.C. 1592A), which authorizes the Secretary of the Treasury to publish in the **Federal Register**, on a biannual basis, a list of the names of any producers, manufacturers, suppliers, sellers, exporters, or other persons located outside the Customs territory of the United States, when these entities and/or persons have been issued a penalty claim under section 592 of the Tariff Act, for certain violations of the customs laws, provided that certain conditions are satisfied.

The violations of the customs laws referred to above are the following: (1) Using documentation, or providing documentation subsequently used by the importer of record, which indicates a false or fraudulent country of origin or source of textile or apparel products; (2) Using counterfeit visas, licenses, permits, bills of lading, or similar documentation, or providing counterfeit visas, licenses, permits, bills of lading, or similar documentation that is subsequently used by the importer of record, with respect to the entry into the Customs territory of the United States of textile or apparel products; (3) Manufacturing, producing, supplying, or selling textile or apparel products which are falsely or fraudulently labeled as to country of origin or source; and (4) Engaging in practices which aid or abet the transshipment, through a country other than the country of origin, of textile or apparel products in a manner which conceals the true origin of the textile or apparel products or permits the evasion of quotas on, or voluntary restraint agreements with respect to, imports of textile or apparel products.

If a penalty claim has been issued with respect to any of the above violations, and no petition in response to the claim has been filed, the name of the party to whom the penalty claim was issued will appear on the list. If a petition, supplemental petition or second supplemental petition for relief from the penalty claim is submitted under 19 U.S.C. 1618, in accord with the time periods established by §§ 171.32 and 171.33, Customs Regulations (19 CFR 171.32, 171.33) and the petition is subsequently denied or the penalty is mitigated, and no further petition, if allowed, is received within 30 days of the denial or allowance of mitigation, then the administrative action shall be deemed to be final and administrative remedies will be deemed to be exhausted. Consequently, the name of the party to whom the penalty claim was issued will appear on the list. However, provision is made for an appeal to the Secretary of the Treasury by the person named on the list, for the removal of its name from the list. If the Secretary finds that such person or entity has not committed any of the enumerated violations for a period of not less than 3 years after the date on which the person or entity's name was published, the name will be removed from the list as of the next publication of the list.

Reasonable Care Required

Section 592A also requires any importer of record entering, introducing, or attempting to introduce into the commerce of the United States textile or apparel products that were either directly or indirectly produced, manufactured, supplied, sold, exported, or transported by such named person to show, to the satisfaction of the Secretary, that such importer has exercised reasonable care to ensure that the textile or apparel products are accompanied by documentation, packaging, and labeling that are accurate as to its origin. Reliance solely upon information regarding the imported product from a person named on the list is clearly not the exercise of reasonable care. Thus, the textile and apparel importers who have some commercial relationship with one or more of the listed parties must exercise a degree of reasonable care in ensuring that the documentation covering the imported merchandise, as well as its packaging and labeling, is accurate as to the country of origin of the merchandise. This degree of reasonable care must rely on more than information supplied by the named party.

In meeting the reasonable care standard when importing textile or apparel products and when dealing with a party named on the list published pursuant to section 592A of the Tariff Act of 1930, an importer should consider the following questions in attempting to ensure that the documentation, packaging, and labeling is accurate as to the country of origin of the imported merchandise. The list of questions is not exhaustive but is illustrative.

(1) Has the importer had a prior relationship with the named party?

(2) Has the importer had any detentions and/or seizures of textile or apparel products that were directly or indirectly produced, supplied, or transported by the named party?

(3) Has the importer visited the company's premises and ascertained that the company has the capacity to produce the merchandise?

(4) Where a claim of an origin conferring process is made in accordance with 19 CFR 102.21, has the importer ascertained that the named party actually performed the required process?

(5) Is the named party operating from the same country as is represented by that party on the documentation, packaging or labeling?

(6) Have quotas for the imported merchandise closed or are they nearing closing from the main producer countries for this commodity?

(7) What is the history of this country regarding this commodity?

(8) Have you asked questions of your supplier regarding the origin of the product?

(9) Where the importation is accompanied by a visa, permit, or license, has the importer verified with

the supplier or manufacturer that the visa, permit, and/or license is both valid and accurate as to its origin? Has the importer scrutinized the visa, permit or license as to any irregularities that would call its authenticity into question?

The law authorizes a biannual publication of the names of the foreign entities and/or persons. On October 5, 1998, Customs published a Notice in the **Federal Register** (63 FR 53493) which identified 26 (twenty-six) entities which fell within the purview of section 592A of the Tariff Act of 1930.

592A List

For the period ending March 31, 1999, Customs has identified 24 (twenty-four) foreign entities that fall within the purview of section 592A of the Tariff Act of 1930. This list reflects the addition of 3 new entities and 5 removals to the 26 entities named on the list published on October 5, 1998. The parties on the current list were assessed a penalty claim under 19 U.S.C. 1592, for one or more of the four above-described violations. The administrative penalty action was concluded against the parties by one of the actions noted above as having terminated the administrative process.

The names and addresses of the 24 foreign parties which have been assessed penalties by Customs for violations of section 592 are listed below pursuant to section 592A. This list supersedes any previously published list. The names and addresses of the 24 foreign parties are as follows (the parenthesis following the listing sets forth the month and year in which the name of the company was first published in the **Federal Register**):

Azmat Bangladesh, Plot Number 22–23, Sector 2 EPZ, Chittagong 4233, Bangladesh. (9/96)
Cupid Fashion Manufacturing Ltd., 17/F Block B, Wongs Factory Building, 368–370 Sha Tsui Road, Tsuen Wan, Hong Kong. (9/97)
Excelsior Industrial Company, 311–313 Nathan Road, Room 1, 15th Floor, Kowloon, Hong Kong. (9/98)
Eun Sung Guatemala, S.A., 13 Calle 3–62 Zona Colonia Landivar, Guatemala City, Guatemala. (3/98)
Everlast Glove Factory, Goldfield Industrial Centre, 1 Sui Wo Road, Room 15, 15th Floor, Fo Tan, Shatin, New Territories, Hong Kong. (3/99)
Glory Growth Trading Company, No.6 Ping Street, Flat 7–10, Block A, 21st Floor, New Trade Plaza, Shatin, New Territories, Hong Kong. (9/98)
Great Southern International Limited, Flat A, 13th floor, Foo Cheong Building, 82–86 Wing Lok Street, Central, Hong Kong. (9/98)
G.T. Plus Ltd., Kowloon Centre, 29–43 Ashley Road, 4/Fl, Tsimshatsui, Kowloon, Hong Kong. (3/99)
Hyattex Industrial Company, 3F, No. 207–4 Hsin Shu Road, Hsin Chuang City, Taipei Hsien, Taiwan. (9/96)
Jentex Industrial, 7–1 Fl., No. 246, Chang An E. Rd., Sec.2, Taipei, Taiwan. (3/97)
Jiangxi Garments Import and Export Corp., Foreign Trade Building, 60 Zhangqian Road, Nanchang, China. (3/98)
Liable Trading Company, 1103 Kai Tak Commercial Building, 62–72 Stanley Street, Kowloon, Hong Kong. (9/98)
Li Xing Garment Company Limited, 2/F Long Guang Building, Number 2 Manufacturing District, Sanxiang Town, Zhongshan, Guandgong, China. (9/96)
Mabco Limited, 6/F VIP Commercial Centre, 116–120 Canton Road, Kowloon, Hong Kong. (3/99)
McKowan Lowe & Company Limited, 1001–1012 Hope Sea Industrial Centre, 26 Lam Hing Street, Kowloon Bay, Kowloon, Hong Kong. (9/98)
Meigao Jamaica Company Limited, 134 Pineapple Ave., Kingston, Jamaica. (9/96)
Meiya Garment Manufacturers Limited, No. 2 Building, 3/F, Shantou Special Economic Zone, Shantou, China. (9/96)
Rex Industries Limited, VIP Commercial Center, 116–120 Canton Road, 11th Floor, Tsimshatsui, Kowloon, Hong Kong. (9/98)
Sannies Garment Factory, 35–41 Tai Lin Pai Road, Gold King Industrial Building, Flat A & B, 2nd Floor, Kwai Chung, New Territories, Hong Kong. (9/98)
Shing Fat Gloves & Rainwear, 2 Tai Lee Street, 1–2 Floor, Yuen Long, New Territories, Hong Kong. (9/98)
Sun Kong Glove Factory, 188 San Wan Road, Units 32–35, 3rd Floor, Block B, Sheung Shui, New Territories, Hong Kong. (9/98)
Sun Weaving Mill Ltd., Lee Sum Factory Building, Block 1 & 2, 23 Sze Mei Street, Sanpokong, Bk 1/2, Kowloon, Hong Kong. (9/97)
Takhi Corporation, Huvsgalchdyn Avenue, Ulaanbaatar 11, Mongolia. (3/98)
Topstyle Limited, 6/F, South Block, Kwai Shun Industrial Center, 51–63
Container Port Road, Kwai Chung, New Territories, Hong Kong. (9/96)

Any of the above parties may petition to have its name removed from the list. Such petitions, to include any documentation that the petitioner deems pertinent to the petition, should be forwarded to the Assistant Commissioner, Office of Field Operations, United States Customs Service, 1300 Pennsylvania Avenue, NW, Washington, DC 20229.

Additional Foreign Entities

In the October 5, 1998, **Federal Register** notice, Customs also solicited information regarding the whereabouts of 29 foreign entities, which were identified by name and known address, concerning alleged violations of section 592. Persons with knowledge of the whereabouts of those 29 entities were requested to contact the Assistant Commissioner, Office of Field Operations, United States Customs Service, 1300 Pennsylvania Avenue, NW, Washington, DC 20229.

In this document, a new list is being published which contains the names and last known addresses of 31 entities. This reflects the addition of two new entities to the list.

Customs is soliciting information regarding the whereabouts of the following 31 foreign entities concerning alleged violations of section 592. Their names and last known addresses are listed below (the parenthesis following the listing sets forth the month and year in which the name of the company was first published in the **Federal Register**):

Balmar Export Pte. Ltd., No. 7 Kampong Kayu Road, Singapore, 1543. (3/98)
Envestisman Sanayi A.S., Buyukdere Cad 47, Tek Is Merkezi, Istanbul, Turkey. (9/97)
Essence Garment Making Factory, Splendid Centre, 100 Larch Street, Flat D, 5th Floor, Taikoktsui, Kowloon, Hong Kong. (3/98)
Fabrica de Artigos de Vest. Dynasty, Lda., Avenida do Almirante Magalhaes Correia, Edificio Industrial Keck Seng, Block III, 4th Floor ''UV'', Macau. (3/98)
Fabrica de Artigos de Vestuario Lei Kou, No. 45 Estrada Marginal de Areia Preta, Edif.Ind.Centro Polytex, 6th Floor, D, Macau. (9/98)
Fabrica de Vestuario Wing Tai, 45 Estrada Marginal Da Areia Preta, Edif. Centro Poltex, 3/E, Macau. (3/98)
Galaxy Gloves Factory, Annking Industrial Building, Wang Yip East Street Room A, 2/F, Lot 357, Yuen Long Industrial Estate, Yuen Long, New Territories, Hong Kong. (3/98)
Golden Perfect Garment Factory, Wong's Industrial Building, 33 Hung To Road, 3rd Floor, Kwun Tong, Kowloon, Hong Kong. (9/98)
Grey Rose Maldives, Phoenix Villa, Majeedee Magu, Male, Republic of Maldives. (3/98)
K & J Enterprises, Witty Commercial Building, 1A–1L Tung Choi Street, Room 1912F, Mong Kok, Kowloon, Hong Kong. (9/98)
Konivon Development Corp., Shun Tak Center, 200 Connaught Road, No. 3204, Hong Kong. (3/98)
Kwuk Yuk Garment Factory, Kwong Industrial Building, 39–41 Beech St., Flat A, 11th Floor, Tai Kok Tsui, Kowloon, Hong Kong. (3/98)
Land Global Ltd., Block c, 14/F, Y.P. Fat Building, Phase 1, 77 Hoi Yuen Road, Kowloon, Hong Kong. (9/97)
Leader Glove Factory, Tai Ping Industrial Centre, 57, Ting Kok Road, 25/F, Block 1, Flat A, Tai Po, New Territories, Hong Kong. (3/98)
Lins Fashions S.A., Lot 111, San Pedro de Macoris, Dominican Republic. (9/96)
Maxwell Garment Factory, Unit C, 21/F, 78–84, Wang Lung Street, Tseun Wan, New Territories, Hong Kong. (3/99)

New Leo Garment Factory Ltd, Galaxy Factory Building, 25–27 Luk Hop Street, Unit B, 18th Floor, San Po Kong, Kowloon, Hong Kong. (9/98)

Patenter Trading Company, Block C. 14/F, Yip Fat Industrial Building, Phase 1, 77 Hoi Yuen Road, Kowloon, Hong Kong. (9/97)

Penta-5 Holding (HK) Ltd., Metro Center II, 21 Lam Hing Street, Room 1907, Kowloon Bay, Kowloon, Hong Kong. (9/98)

Round Ford Investments, 37–39 Ma Tau Wai Road, 13/f Tower B, Kowloon, Hong Kong. (9/97)

Shanghai Yang Yuan Garment Factory, 2 Zhaogao Road, Chuanshin, Shanghai, China. (9/97)

Silver Pacific Enterprises Ltd., Shun Tak Center, 200 Connaught Road, No. 3204, Hong Kong. (3/98)

Tak Hing Textile Company Limited, Wo Fung Industrial Building, 3/F, block D, Lot No. 5180, IN D.D 51, On Lok Village, Fanling, New Territories, Hong Kong. (3/99)

Tat Hing Garment Factory, Tat Cheong Industrial Building, 3 Wing Ming Street, Block C, 13/F, Lai Chi Kok, Kowloon, Hong Kong. (3/98)

Tientak Glove Factory Limited, 1 Ting Kok Road, Block A, 26/F, Tai Po, New Territories, Hong Kong. (3/98)

United Textile and Weaving, P.O. Box 40355, Sharjah, United Arab Emirates. (3/97)

Wealthy Dart, Wing Ka Industrial Building, 87 Larch Street, 7th Floor, Kowloon, Hong Kong. (3/98)

Wilson Industrial Company, Yip Fat Factory Building, 77 Hoi Yuen Road, Room B, 3/F, Kwun Yong, Kowloon, Hong Kong. (3/98)

Wing Lung Manufactory, Hing Wah Industrial Building, Units 2, 5–8, 4th Floor YLTL 373, Yuen Long, New Territories, Hong Kong. (9/98)

Yogay Fashion Garment Factory Ltd, Lee Wan Industrial Building, 5 Luk Hop Street, San Po Kong, Kowloon, Hong Kong. (3/98)

Zuun Mod Garment Factory Ltd., Tuv Aimag, Mongolia. (9/97)

If you have any information as to a correct mailing address for any of the above 31 firms, please send that information to the Assistant Commissioner, Office of Field Operations, U.S. Customs Service, 1300 Pennsylvania Avenue, NW, Washington, DC 20229.

Dated: April 1, 1999.

Garnet J. Fee,

Acting Assistant Commissioner, Office of Field Operations.

[FR Doc. 99–8423 Filed 4–5–99; 8:45 am]

BILLING CODE 4820–02–P

DEPARTMENT OF THE TREASURY

Fiscal Service

Surety Companies Acceptable on Federal Bonds: Termination; Allied Mutual Insurance Company

AGENCY: Financial Management Service, Fiscal Service, Department of the Treasury.

ACTION: Notice.

SUMMARY: This is Supplement No. 10 to the Treasury Department Circular 570; 1998 Revision, published July 1, 1998, at 63 FR 36080.

FOR FURTHER INFORMATION CONTACT: Surety Bond Branch at (202) 874–6507.

SUPPLEMENTARY INFORMATION: Notice is hereby given that the Certificate of Authority issued by the Treasury to Allied Mutual Insurance Company, under the United States Code, Title 31, sections 9304–9408, to qualify as an acceptable surety on Federal bonds is terminated effective immediately.

The Company was last listed as an acceptable surety on Federal bonds at 63 FR 36082, July 1, 1998.

With respect to any bonds currently in force with Allied Mutual Insurance Company, bond-approving officers may let such bonds run to expiration and need not secure new bonds. However, no new bonds should be accepted from the Company. In addition, bonds that are continuous in nature should not be renewed.

The Circular may be viewed and downloaded through the Internet at http://www.fms.treas.gov/c570/index.html. A hard copy may be purchased from the Government Printing Office (GPO), Subscription Service, Washington, DC, telephone (202) 512–1800. When ordering the Circular from GPO, use the following stock number: 048000–00516–1.

Questions concerning this notice may be directed to the U.S. Department of the Treasury, Financial Management Service, Financial Accounting and Services Division, Surety Bond Branch, 3700 East-West Highway, Room 6A04, Hyattsvlle, MD 20782.

Dated: March 26, 1999.

Wanda J. Rogers,

Acting Director, Financial Accounting and Services Division, Financial Management Service.

[FR Doc. 99–8351 Filed 4–5–99; 8:45 am]

BILLING CODE 4810–35–M

DEPARTMENT OF THE TREASURY

Fiscal Service

Surety Companies Acceptable on Federal Bonds: Columbia Mutual Insurance Company

AGENCY: Financial Management Service, Fiscal Service, Department of the Treasury.

ACTION: Notice.

SUMMARY: This Is Supplement No. 11 to the Treasury Department Circular 570; 1998 Revision, published July 1, 1998, at 63 FR 36080.

FOR FURTHER INFORMATION CONTACT: Surety Bond Branch at (202) 874–6905.

SUPPLEMENTARY INFORMATION: A Certificate of Authority as an acceptable surety on Federal bonds is hereby issued to the following Company under 31 U.S.C. 9304 to 9308. Federal bond-approving officers should annotate their reference copies of the Treasury Circular 570, 1998 Revision, on page 36088 to reflect this addition:

Columbia Mutual Insurance Company. BUSINESS ADDRESS: P.O. Box 618, Columbia, Missouri 65202. PHONE: (573) 474–6193. UNDERWRITING LIMITATION b/: $5,211,000. SURETY LICENSES c/: AL, AZ. AR, CO, GA, ID, IL, IN, IA, KS, KY, LA, MN, MS, MO, MT, NE, NM, ND, OK, ND, SD, TN, TX, VA, WA, WV and WY. INCORPORATED IN: Missouri.

Certificates of Authority expire on June 30 each year, unless revoked prior to that date. The Certificates are subject to subsequent annual renewal as long as the companies remain qualified (31 CFR part 223). A list of qualified companies is published annually as of July 1 in Treasury Department Circular 570, with details as to underwriting limitations, areas in which licensed to transact surety business and other information.

The Circular may be viewed and downloaded through the Internet at http://www.fms.treas.gov/c570/index.htlm. A hard copy may be purchased from the Government Printing Office (GPO) Subscription Service, Washington, DC, Telephone (202) 512–1800. When ordering the Circular from GPO, use the following stock number: 048–000–00516–1.

Questions concerning this Notice may be directed to the U.S. Department of the Treasury, Financial Management Service, Financial Accounting and Services Division, Surety Bond Branch, 3700 East-West Highway, Room 6A04, Hyattsville, MD 20782.

Dated: March 26, 1999.

Wanda J. Rogers,

Acting Director, Financial Accounting and Services Division, Financial Management Service.

[FR Doc. 99–8352 Filed 4–5–99; 8:45 am]

BILLING CODE 4810–15–M

DEPARTMENT OF THE TREASURY

Fiscal Service

Surety Companies Acceptable on Federal Bonds: Michigan Mutual Insurance Company

AGENCY: Financial Management Service, Fiscal Service, Department of the Treasury.

ACTION: Notice.

SUMMARY: This is Supplement No. 8 to the Treasury Department Circular 570; 1988 Revision, published July 1, 1998, at 63 FR 36080.

FOR FURTHER INFORMATION CONTACT: Surety Bond Branch at (202) 874–7102.

SUPPLEMENTARY INFORMATION: A Certificate of Authority as an acceptable surety on Federal bonds is hereby issued to the following Company under 31 U.S.C. 9304 to 9308. Federal bond-approving officers should annotate their reference copies of the Treasury Circular 570, 1998 Revision, on page 36099 to reflect this addition:

Michigan Mutual Insurance Company. BUSINESS ADDRESS: P.O. Box 2060, Farmington Hills, MI 48333–2060. PHONE: (248) 615–9000. UNDERWRITING LIMITATION b/: $13,106,000. SURETY LICENSES c/: AL, AK, AZ, AR, CA, CO, CT, FL, GA, ID, IL, IN, IA, KS, KY, LA, ME, MD, MA, MI, MN, MS, MO, MT, NE, NV, NH, NJ, NM, NY, NC, ND, OH, OK, PA, RI, SC, SD, TN, TX, UT, VT, VA, WA, WV, WI, and WY. INCORPORATED IN: Michigan.

Certificates of Authority expire on June 30 each year, unless revoked prior to that date. The Certificates are subject to subsequent annual renewal as long as the companies remain qualified (31 CFR part 223). A list of qualified companies is published annually as of July 1 in Treasury Department Circular 570, with details as to underwriting limitations, areas in which licensed to transact surety business and other information.

The Circular may be viewed and downloaded through the Internet at http://www.fms.treas.gov/c570/index.html. A hard copy may be purchased from the Government Printing Office (GPO) Subscription Service, Washington, DC, Telephone (202) 512–1800. When ordering the Circular from GPO, use the following stock number: 048–000–00516–1.

Questions concerning this Notice may be directed to the U.S. Department of the Treasury, Financial Management Service, Financial Accounting and Services Division, Surety Bond Branch, 3700 East-West Highway, Room 6A04, Hyattsville, MD 20782.

Dated: February 23, 1999.

Wanda J. Rogers,

Acting Director, Financial Accounting and Services Division, Financial Management Service.

[FR Doc. 99–8350 Filed 4–5–99; 8:45 am]

BILLING CODE 4810–35–M

DEPARTMENT OF THE TREASURY

Fiscal Service

Surety Companies Acceptable on Federal Bonds: NOVA Casualty Company

AGENCY: Financial Management Service, Fiscal Service, Department of the Treasury.

ACTION: Notice.

SUMMARY: This is Supplement No. 12 to the Treasury Department Circular 570; 1998 Revision, published July 1, 1998, at 63 FR 36080.

FOR FURTHER INFORMATION CONTACT: Surety Bond Branch at (202) 874–6765.

SUPPLEMENTARY INFORMATION: A Certificate of Authority as an acceptable surety on Federal bonds is hereby issued to the following Company under 31 U.S.C. 9304 to 9308. Federal bond-approving officers should annotate their reference copies of the Treasury Circular 570, 1998 Revision, on page 36102 to reflect this addition:

NOVA Casualty Company. BUSINESS ADDRESS: 180 Oak Street, Buffalo, New York, 14203–1610. PHONE: (716) 856–3722. UNDERWRITING LIMITATION b/: $520,000. SURETY LICENSES c/: IN, IA, MS, NY, ND. INCORPORATED IN: New York.

Certificates of Authority expire on June 30 each year, unless revoked prior to that date. The Certificates are subject to subsequent annual renewal as long as the companies remain qualified (31 CFR Part 223). A list of qualified companies is published annually as of July 1 in Treasury Department Circular 570, with details as to underwriting limitations, areas in which licensed to transact surety business and other information.

The Circular may be viewed and downloaded through the Internet at http://www.fms.treas.gov/c570/index.html. A hard copy may be purchased from the Government Printing Office (GPO) Subscription Service, Washington, DC, Telephone (202) 512–1800. When ordering the Circular from GPO, use the following stock number: 048–000–00516–1.

Questions concerning this Notice may be directed to the U.S. Department of the Treasury, Financial Management Service, Financial Accounting and Services Division, Surety Bond Branch, 3700 East-West Highway, Room 6A04, Hyattsville, MD 20782.

Dated: March 26, 1999.

Wanda J. Rogers,

Acting Director, Financial Accounting and Services Division, Financial Management Service.

[FR Doc. 99–8353 Filed 4–5–99; 8:45 am]

BILLING CODE 4810–35–M

DEPARTMENT OF THE TREASURY

Internal Revenue Service

Proposed Collection; Comment Request for Form 3975

AGENCY: Internal Revenue Service (IRS), Treasury.

ACTION: Notice and request for comments.

SUMMARY: The Department of the Treasury, as part of its continuing effort to reduce paperwork and respondent burden, invites the general public and other Federal agencies to take this opportunity to comment on proposed and/or continuing information collections, as required by the Paperwork Reduction Act of 1995, Public Law 104–13 (44 U.S.C. 3506(c)(2)(A)). Currently, the IRS is soliciting comments concerning Form 3975, Tax Professionals Annual Mailing List Application and Order Blank.

DATES: Written comments should be received on or before June 7, 1999 to be assured of consideration.

ADDRESSES: Direct all written comments to Garrick R. Shear, Internal Revenue Service, room 5571, 1111 Constitution Avenue NW., Washington, DC 20224.

FOR FURTHER INFORMATION CONTACT: Requests for additional information or copies of the form should be directed to Carol Savage, (202) 622–3945, Internal Revenue Service, room 5569, 1111 Constitution Avenue NW., Washington, DC 20224.

SUPPLEMENTARY INFORMATION:

Title: Tax Professionals Annual Mailing List Application and Order Blank.

OMB Number: 1545–0351.

Form Number: Form 3975.

Abstract: Form 3975 allows a tax professional a systematic way to remain

on the Tax Professional Mailing File and to order copies of tax materials.

Current Actions: There are no changes being made to the form at this time.

Type of Review: Extension of a currently approved collection.

Affected Public: Business or other for-profit organizations.

Estimated Number of Respondents: 320,000.

Estimated Time Per Respondent: 3 minutes.

Estimated Total Annual Burden Hours: 16,000.

The following paragraph applies to all of the collections of information covered by this notice:

An agency may not conduct or sponsor, and a person is not required to respond to, a collection of information unless the collection of information displays a valid OMB control number. Books or records relating to a collection of information must be retained as long as their contents may become material in the administration of any internal revenue law. Generally, tax returns and tax return information are confidential, as required by 26 U.S.C. 6103.

REQUEST FOR COMMENTS: Comments submitted in response to this notice will be summarized and/or included in the request for OMB approval. All comments will become a matter of public record. Comments are invited on: (a) Whether the collection of information is necessary for the proper performance of the functions of the agency, including whether the information shall have practical utility; (b) the accuracy of the agency's estimate of the burden of the collection of information; (c) ways to enhance the quality, utility, and clarity of the information to be collected; (d) ways to minimize the burden of the collection of information on respondents, including through the use of automated collection techniques or other forms of information technology; and (e) estimates of capital or start-up costs and costs of operation, maintenance, and purchase of services to provide information.

Approved: March 30, 1999.

Garrick R. Shear,

IRS Reports Clearance Officer.

[FR Doc. 99–8346 Filed 4–5–99; 8:45 am]

BILLING CODE 4830–01–P

DEPARTMENT OF THE TREASURY

Internal Revenue Service

Proposed Collection; Comment Request for Form 10318

AGENCY: Internal Revenue Service (IRS), Treasury.

ACTION: Notice and request for comments.

SUMMARY: The Department of the Treasury, as part of its continuing effort to reduce paperwork and respondent burden, invites the general public and other Federal agencies to take this opportunity to comment on proposed and/or continuing information collections, as required by the Paperwork Reduction Act of 1995, Pub. L. 104–13 (44 U.S.C. 3506(c)(2)(A)). Currently, the IRS is soliciting comments concerning Form 10318, Deduction For Depletion On Ground Water Used For Irrigation.

DATES: Written comments should be received on or before June 7, 1999 to be assured of consideration.

ADDRESSES: Direct all written comments to Garrick R. Shear, Internal Revenue Service, room 5571, 1111 Constitution Avenue NW., Washington, DC 20224.

FOR FURTHER INFORMATION CONTACT: Requests for additional information or copies of the form(s) and instructions should be directed to Carol Savage, (202) 622–3945, Internal Revenue Service, room 5569, 1111 Constitution Avenue NW., Washington, DC 20224.

SUPPLEMENTARY INFORMATION:

Title: Deduction For Depletion On Ground Water Used For Irrigation.

OMB Number: 1545–0520.

Form Number: Form 10318.

Abstract: This form provides a standard method of computing and reporting water depletion deductions by taxpayers who extract ground water from Ogallala geological formation. The IRS uses the information to determine if the depletion deduction has been computed correctly.

Current Actions: There are no changes being made to the form at this time.

Type of Review: Extension of a currently approved collection.

Affected Public: Business or other for-profit organizations, individuals, and farms.

Estimated Number of Respondents: 2,000.

Estimated Time Per Respondent: 2 hours.

Estimated Total Annual Burden Hours: 4,000.

The following paragraph applies to all of the collections of information covered by this notice:

An agency may not conduct or sponsor, and a person is not required to respond to, a collection of information unless the collection of information displays a valid OMB control number. Books or records relating to a collection of information must be retained as long as their contents may become material in the administration of any internal revenue law. Generally, tax returns and tax return information are confidential, as required by 26 U.S.C. 6103.

REQUEST FOR COMMENTS: Comments submitted in response to this notice will be summarized and/or included in the request for OMB approval. All comments will become a matter of public record. Comments are invited on: (a) Whether the collection of information is necessary for the proper performance of the functions of the agency, including whether the information shall have practical utility; (b) the accuracy of the agency's estimate of the burden of the collection of information; (c) ways to enhance the quality, utility, and clarity of the information to be collected; (d) ways to minimize the burden of the collection of information on respondents, including through the use of automated collection techniques or other forms of information technology; and (e) estimates of capital or start-up costs and costs of operation, maintenance, and purchase of services to provide information.

Approved: March 29, 1999.

Garrick R. Shear,

IRS Reports Clearance Officer.

[FR Doc. 99–8347 Filed 4–5–99; 8:45 am]

BILLING CODE 4830–01–P

DEPARTMENT OF THE TREASURY

Internal Revenue Service

[REG–209798–95]

Proposed Collection; Comment Request for Regulation Project

AGENCY: Internal Revenue Service (IRS), Treasury.

ACTION: Notice and request for comments.

SUMMARY: The Department of the Treasury, as part of its continuing effort to reduce paperwork and respondent burden, invites the general public and other Federal agencies to take this opportunity to comment on proposed and/or continuing information collections, as required by the Paperwork Reduction Act of 1995, Pub. L. 104–13 (44 U.S.C. 3506(c)(2)(A)). Currently, the IRS is soliciting comments concerning an existing final regulation, REG–209798–95 (TD 8746), Amortizable Bond Premium, (Reg. sections 1.163–13, 1.171–4, and 1.171–5).

DATES: Written comments should be received on or before June 7, 1999 to be assured of consideration.

ADDRESSES: Direct all written comments to Garrick R. Shear, Internal Revenue Service, room 5571, 1111 Constitution Avenue NW., Washington, DC 20224.

FOR FURTHER INFORMATION CONTACT: Requests for additional information or copies of this regulation should be directed to Faye Bruce, (202) 622–6665, Internal Revenue Service, room 5577, 1111 Constitution Avenue NW., Washington, DC 20224.

SUPPLEMENTARY INFORMATION:

Title: Amortizable Bond Premium.

OMB Number: 1545–1491.

Regulation Project Number: REG–209798–95.

Abstract: This regulation addresses the tax treatment of bond premium. The regulation provides that a holder may make an election to amortize bond premium by offsetting interest income with bond premium, and the holder must attach a statement to their tax return providing certain information. The regulation also provides that a taxpayer may receive automatic consent to change its method of accounting for premium provided the taxpayer attaches a statement to its tax return. The information requested is necessary for the IRS to determine whether a holder of a bond has elected to amortize bond premium and to determine whether an issuer or a holder has changed its method of accounting for premium.

Current Actions: There is no change to this existing regulation.

Type of Review: Extension of a currently approved collection.

Affected Public: Business or other for-profit organizations and individuals.

Estimated Number of Respondents: 100,000.

Estimated Time Per Respondent: 30 min.

Estimated Total Annual Burden Hours: 50,000.

The following paragraph applies to all of the collections of information covered by this notice:

An agency may not conduct or sponsor, and a person is not required to respond to, a collection of information unless the collection of information displays a valid OMB control number. Books or records relating to a collection of information must be retained as long as their contents may become material in the administration of any internal revenue law. Generally, tax returns and tax return information are confidential, as required by 26 U.S.C. 6103.

REQUEST FOR COMMENTS: Comments submitted in response to this notice will be summarized and/or included in the request for OMB approval. All comments will become a matter of public record. Comments are invited on: (a) Whether the collection of information is necessary for the proper performance of the functions of the agency, including whether the information shall have practical utility; (b) the accuracy of the agency's estimate of the burden of the collection of information; (c) ways to enhance the quality, utility, and clarity of the information to be collected; (d) ways to minimize the burden of the collection of information on respondents, including through the use of automated collection techniques or other forms of information technology; and (e) estimates of capital or start-up costs and costs of operation, maintenance, and purchase of services to provide information.

Approved: March 25, 1999.

Garrick R. Shear,

IRS Reports Clearance Officer.

[FR Doc. 99–8348 Filed 4–5–99; 8:45 am]

BILLING CODE 4830–01–P

DEPARTMENT OF THE TREASURY

Internal Revenue Service

Publication of Inflation Adjustment Factor, Nonconventional Source Fuel Credit, and Reference Price for Calendar Year 1998

AGENCY: Internal Revenue Service (IRS), Treasury.

ACTION: Publication of inflation adjustment factor, nonconventional source fuel credit, and reference price for calendar year 1998 as required by section 29 of the Internal Revenue Code (26 U.S.C. section 29).

SUMMARY: The inflation adjustment factor, nonconventional source fuel credit, and reference price are used in determining the tax credit allowable on the production of fuel from nonconventional sources under section 29.

DATES: The 1998 inflation adjustment factor, nonconventional source fuel credit, and reference price apply to qualified fuels sold during calendar year 1998.

INFLATION FACTOR: The inflation factor for calendar year 1998 is 2.0384.

CREDIT: The nonconventional source fuel credit for calendar year 1998 is $6.12 per barrel-of-oil equivalent of qualified fuels.

PRICE: The reference price for calendar year 1998 is $10.88. Because this reference price does not exceed $23.50 multiplied by the inflation adjustment factor, the phaseout of credit provided for in section 29(b)(1) does not occur for any qualified fuel sold in calendar year 1998.

FOR FURTHER INFORMATION CONTACT:

For the inflation factor and credit—Thomas Thompson, OP:RS:R:E, Internal Revenue Service, 1111 Constitution Avenue, NW., Washington, DC 20224, Telephone Number (202) 874–0585 (not a toll-free number)

For the reference price—Alan Cooper or David McMunn, CC:DOM:P&SI:6, Internal Revenue Service, 1111 Constitution Avenue, NW., Washington, DC 20224, Telephone Number (202) 622–3110 (not a toll-free number)

Judith C. Dunn,

Associate Chief Counsel (Domestic).

[FR Doc. 99–8371 Filed 4–5–99; 8:45 am]

BILLING CODE 4830–01–U

federal register

Tuesday
April 6, 1999

Part II

Federal Housing Finance Board

12 CFR Parts 935, et al.

Prohibition on Payment Fee in Lieu of Mandatory Excess Capital Stock Redemption; Final Rule

Mandatory Excess Capital Stock Redemption; Prohibited Stock Dividends; Proposed Rule

FEDERAL HOUSING FINANCE BOARD

12 CFR Part 935

[No. 99–21]

RIN 3069–AA83

Prohibition on Payment of Fee In Lieu of Mandatory Excess Capital Stock Redemption

AGENCY: Federal Housing Finance Board.

ACTION: Interim final rule.

SUMMARY: The Federal Housing Finance Board (Finance Board) is amending its regulation governing Federal Home Loan Bank (Bank) advances to prohibit the Banks from imposing or accepting a fee in lieu of redeeming a member's excess capital stock held in the Bank. The Finance Board has determined that allowing the payment of such fees would detract from the agency's ongoing efforts and initiatives to ensure that the Banks carry out their housing finance and community investment mission.

EFFECTIVE DATE: This interim final rule shall be effective on April 6, 1999. The Finance Board will accept written comments on this interim final rule on or before May 6, 1999.

FOR FURTHER INFORMATION CONTACT: Joseph A. McKenzie, Deputy Chief Economist, (202) 408–2845, Office of Policy, Research and Analysis; or Sharon B. Like, Senior Attorney-Advisor, (202) 408–2930, or Jane S. Converse, Senior Attorney-Advisor, (202) 408–2976, Office of General Counsel, Federal Housing Finance Board, 1777 F Street, N.W., Washington, D.C. 20006.

SUPPLEMENTARY INFORMATION:

I. Statutory and Regulatory Background

A. The Banks' Housing Finance and Community Investment Mission

The Federal Home Loan Bank System (Bank System) is comprised of 12 District Banks that are federally chartered and managed by boards of directors that set policies pursuant to regulations established by the Finance Board. As government-sponsored enterprises (GSEs), the Banks act as intermediaries in the capital markets, raising funds on favorable terms and passing the proceeds on to member institutions in the form of advances (loans).

Under section 10(a) of the Federal Home Loan Bank Act (Bank Act) and part 935 of the Finance Board's regulations, the Banks have broad authority to make advances in support of housing finance, which includes community investment finance. *See* 12 U.S.C. 1430(a), (i), (j); 12 CFR part 935. The Banks also are required to offer two programs, the Affordable Housing Program (AHP) and the Community Investment Program (CIP), to provide subsidized or at-cost advances, respectively, in support of unmet housing finance or economic development credit needs. *See* 12 U.S.C. 1430(i), (j); 12 CFR parts 960, 970. In addition, section 10(j)(10) of the Bank Act, as implemented by a recently issued Finance Board regulation, authorizes the Banks to establish Community Investment Cash Advance (CICA) Programs for community lending, defined as providing financing for economic development projects for targeted beneficiaries. *See* 12 U.S.C. 1430(j)(10); 63 FR 65536 (Nov. 27, 1998).

The Bank Act provides that the Finance Board's primary duty is to ensure that the Banks operate in a financially safe and sound manner. *See id.* section 1422a(a)(3)(A). The Bank Act further provides that, to the extent consistent with this primary duty, the Finance Board also is responsible for supervising the Banks, ensuring that the Banks carry out their housing finance mission, and ensuring that the Banks remain adequately capitalized and able to raise funds in the capital markets. *See id.* section 1422a(a)(3)(B).

B. Statutory and Regulatory Minimum Capital Stock, Dividend and Redemption Provisions

Under the Bank Act and implementing Finance Board regulations, a member's required minimum capital stock investment in its Bank is the greater of: (1) 1 percent of the member's aggregate unpaid loan principal (defined as the member's home mortgage loans, home purchase contracts, and similar obligations) but not less than $500; (2) 0.3 percent of the member's total assets; or (3) 5 percent of total advances outstanding to the member. In the case of members that are not ''qualified thrift lenders'' (QTLs), the third option is computed as 5 percent of total advances outstanding to the member divided by the member's ''actual thrift investment percentage'' (as defined in 12 U.S.C. 1467a(m)). *See* 12 U.S.C. 1426(b)(1), (2), (4); 1430(c), (e)(1), (3); 12 CFR 933.20(a).

Section 6(b)(1) further provides that the Bank shall annually adjust, at such time and in such manner as the Finance Board may by regulations or otherwise prescribe, the amount of capital stock held by each member so that such member shall have invested its minimum capital stock requirement. *See id.* section 1426(b)(1); 12 CFR 933.22(b)(1). Section 6(b)(1) also provides that if the Bank finds that the investment of any member in capital stock is greater than that required under section 6(b), the Bank may, unless prohibited by the Finance Board, in its discretion and upon application of the member, retire the capital stock of such member in excess of the amount so required. *See id.* section 1426(b)(1); 12 CFR 933.22(b)(2).

Section 16(a) of the Bank Act provides, among other things, that dividends may be paid by the Banks with the approval of the Finance Board. *See* 12 U.S.C. 1436(a). Section 6(g) of the Bank Act provides that all stock of any Bank shall share in dividend distributions without preference. *See id.* section 1426(g). Section 934.17 of the Finance Board's regulations on the operations of the Banks implements these provisions by providing, among other things, that dividends may be paid by the Banks in cash or in the form of stock. *See* 12 CFR 932.3; 63 FR 65683, 65687 (Nov. 30, 1998) (redesignating § 932.3 as § 934.17).

Section 935.15(b) of the Finance Board's Advances Regulation provides that ''[a] Bank, after providing 15 calendar days advance written notice to a member, may unilaterally redeem that amount of the member's Bank stock that exceeds'' the member's minimum statutory and regulatory capital stock requirements. *See* 12 CFR 935.15(b). Section 935.15(b) further provides that the Bank shall have discretion to determine the timing of such unilateral redemption, provided that the Bank's redemption policy is consistent with the requirement in section 7(j) of the Bank Act that the affairs of the Bank shall be administered fairly and impartially and without discrimination in favor of or against member borrowers, *see* 12 U.S.C. section 1427(j).

The Bank Act and § 935.15(b) of the Advances regulation are silent on whether a Bank, in administering its mandatory redemption policy, may impose on or accept from a member a fee in lieu of redeeming the member's excess Bank capital stock.

II. Analysis of the Interim Final Rule

A. Proposed Fee In Lieu of Mandatory Excess Capital Stock Redemption

A Bank has adopted a policy, effective March 31, 1999, pursuant to which the Bank generally will redeem that amount of each member's capital stock exceeding 115 percent of the member's minimum statutory capital stock requirement, with an option, if lawful and appropriate, for the member to pay

a fee to the Bank in lieu of such redemption. The Bank has requested confirmation from the Finance Board that the proposed fee would be authorized under the Bank Act and Finance Board regulations.

As noted above, the Bank Act and § 935.15(b) of the Finance Board's Advances regulation are silent on whether a Bank may impose on or accept from a member a fee in lieu of redeeming the member's excess Bank capital stock. Even though the Bank Act is susceptible to an interpretation that the payment of such fees would be authorized under law, the Finance Board has determined that allowing the payment of such fees would detract from the agency's ongoing efforts and initiatives to ensure that the Banks carry out their housing finance and community investment mission, as discussed below. Therefore, the Finance Board is adopting this interim final rule prohibiting the payment of such fees. Although this interim final rule will become effective on the date of publication in the **Federal Register**, the Finance Board requests comment on all aspects of the rule during a 30-day comment period.

According to the Bank, the purpose of the Bank's proposed redemption policy is to enhance the Bank's competitiveness vis a vis other Banks by increasing its earnings per share and therefore its dividend rate. The Bank forecasts that mandatory redemption of surplus capital stock or payment of the fee in lieu of redemption would add approximately 12 basis points to the Bank's quarterly dividend. The Bank has a number of large members owned by holding companies that also have subsidiaries located in other Bank districts. The Bank is concerned that these members may discontinue borrowing from the Bank and that their affiliates will become members and borrow from these other Banks because those Banks pay higher dividend rates than the Bank.

Under the Bank's proposed policy, the Bank would unilaterally redeem ''surplus'' capital stock (defined by the Bank as capital stock in excess of 115 percent of minimum capital stock requirements but not less than $100,000) held by all members, unless the member pays a fee to the Bank, on a monthly basis, to continue holding its surplus capital stock. The 115 percent threshold was adopted to allow membership flexibility for future borrowings from the Bank and absorb the stock dividends. The $100,000 minimum was adopted in order to reduce the operational impact of the redemption policy on smaller members. The Bank states that the fee, which is 1.65 percent of the value of a member's surplus capital stock, was designed to make the Bank financially indifferent to a member's decision to continue to hold surplus capital stock. The fee income paid to the Bank would act as an offset to the dividend dilution caused by those members holding surplus capital stock.

As of August 31, 1998, the Bank had excess capital stock of $554 million, or 14 percent of its total capital of $3.9 billion. The Bank's total ''surplus'' capital stock, as of August 31, 1998, was $312 million. One mandatory thrift member held 70 percent of the Bank's total surplus capital stock as of that date. The Bank has excess capital stock, in part, because it pays members quarterly stock dividends rather than cash dividends. The Bank has indicated that paying a stock dividend rather than a cash dividend provides tax benefits for its members, and the Bank intends to continue paying stock dividends for this reason.

B. The Banks Are Significantly Overcapitalized

By many standards, the 12 Banks are significantly overcapitalized. As of December 31, 1998, the 12 Banks had total capital stock of $22.8 billion, with $2.8 billion, or 12.6 percent, of this amount constituting capital stock in excess of the Banks' statutory minimum capital stock requirements. On a risk-adjusted basis (using the current risk-based standards applicable to federally regulated depositories), the total capital is estimated at 22 percent of the Banks' total assets, a level far above that of large commercial banks and other housing GSEs.[1] The highest percentage of excess capital stock to total capital stock at a Bank was 30.1 percent, and the lowest was 1.2 percent.

Even without excess capital stock in the Bank System, *i.e.*, capital stock at only the statutorily required minimum stock levels, the Banks would be significantly overcapitalized. A redemption of all excess capital stock in the Bank System would reduce the Banks' risk-based capital ratio to approximately 19.2 percent.

Members have excess capital stock holdings, in part, because they receive stock dividends from the Banks. Currently, five Banks pay stock dividends, and seven Banks pay cash dividends. The Internal Revenue Service has ruled that the issuance of stock dividends by the Banks is not taxable income for members. *See* IRS Rev. Rul. 90–98, November 26, 1990, 1990–48–I.R.B.4, 26 CFR 1.305–2. However, cash dividends and redemptions of stock received as dividends generally are taxable income to members. *See* 26 U.S.C. 301(c), 302(a). Because of the deferred tax liability associated with stock dividends, many members may have allowed their stock dividends to accumulate rather than request redemption of their capital stock, as is their option under the Bank Act. *See* 12 U.S.C. 1426(b)(1).

The members' holdings of excess capital stock are concentrated, with the largest holder of excess capital stock having 9 percent of the Bank System's total excess capital stock. The top five holders of excess capital stock represent 19 percent of the Bank System's total excess capital stock.

Excess capital stock holdings also arise where members' total assets, home mortgage loans or outstanding advances have decreased since their last capital stock purchases, or where members have changed to QTL status, thereby reducing their advances-based capital stock requirement. Members may continue to hold some excess capital stock in order to minimize the transaction costs associated with capital stock purchases that would be required if the member's levels of total assets, home mortgage loans or outstanding advances fluctuate.

C. The Banks' Arbitrage Activities With Non-Core Mission Assets Detract From the Mission of the Banks To Promote Housing Finance and Community Investment

The Banks pay dividends on all capital stock, including excess capital stock. Since the average Bank System dividend rate of 6.64 percent exceeds the rate of return a Bank can earn by investing members' capital in core mission assets, a Bank must leverage its excess capital stock to pay dividends. The leveraging cannot involve advances, since they are already capitalized by required capital stock. Thus, the Banks must leverage excess capital stock by investing in non-core mission assets in order to generate sufficient earnings to pay a uniform dividend on all capital stock, including the excess capital stock.

There is a strong correlation between the amount of excess capital stock at a Bank and the level of that Bank's non-

[1] A depository institution generally is deemed to be ''well-capitalized'' if it has a total risk-based capital ratio of 10 percent or greater, a Tier 1 risk-based capital ratio of 6 percent or greater, and a leverage ratio of 5 percent or greater. *See* 12 CFR 6.4(b)(1), 208.33(b)(1), 325.103(b)(1), 565.4(b)(1). The minimum capital requirement for the other housing GSEs—the Federal National Mortgage Association and the Federal Home Loan Mortgage Corporation—generally is 2.5 percent of on-balance sheet assets plus .45 percent of off-balance sheet obligations. *See* 12 U.S.C. 4612(a).

core mission assets. In demonstrating the correlation between excess capital stock and non-mission-related assets, the Finance Board looked at the concept of ''core mission assets,'' defined as Bank advances, which include AHP advances and subsidies, CIP advances, community lending advances, Mortgage Partnership Finance assets, and other assets generated for the Banks by members and nonmember borrowers. Core mission assets do not include mortgage-backed securities (MBS) and money market instruments, which are not generated for the Banks by members or nonmember borrowers and their purchase by the Banks does not materially facilitate housing and community lending by members or nonmember borrowers. As demonstrated in the following table, the Banks with the highest levels of excess capital stock also have the lowest ratios of core mission assets to consolidated obligations:

EXCESS CAPITAL STOCK AND CORE MISSION ASSETS

Bank	Core mission assets to consolidated obligations (%)	Descending rank	Excess capital stock to total capital stock (%)	Rank
A	86.5	1	10.4	7
B	85.1	2	1.0	1
C	81.8	3	10.2	6
D	81.3	4	4.2	2
E	80.7	5	3.0	3
F	79.7	6	7.8	4
G	70.5	7	9.3	5
H	69.4	8	17.1	10
I	65.4	9	26.8	11
J	63.8	10	15.2	8
K	59.9	11	30.1	12
L	58.6	12	16.2	9
Bank System	75.8	.....	12.6	.....

Approximately 75.8 percent of total Bank System consolidated obligations are invested in core mission assets.

The four Banks with the highest ratios of core mission assets to consolidated obligations had ratios of excess capital stock to total capital stock of 10.4 percent, 1.2 percent, 10.4 percent, and 4.2 percent. The five Banks with the lowest ratios of core mission assets to consolidated obligations had the highest ratios of excess capital stock to total capital stock. Of these five, three pay stock dividends, and one pays the highest dividend in the Bank System. At present, core mission assets are no more than 86.5 percent of consolidated obligations at any Bank.

The Finance Board believes that the Banks' arbitrage activities for the purpose of generating sufficient earnings to pay adequate dividends on excess capital stock detract from the mission of the Banks to promote housing finance and community investment, by encouraging activities not related to the Banks' mission and thereby detracting from the financial incentive to engage in mission-related activity. While the Banks' interest in paying a reasonable dividend to members is a legitimate business consideration, and it is appropriate to redeem excess capital stock to assist in this purpose, allowing members to pay a fee in lieu of such mandatory redemption would perpetuate excess capital stock at the Banks and the Banks' continued need to invest in non-core mission assets to pay dividends on such excess stock.

D. Amendment of Advances Regulation To Prohibit Payment of Fee In Lieu of Mandatory Excess Capital Stock Redemption—§ 935.15(b)

For the reasons discussed above, this interim final rule amends § 935.15(b) of the Finance Board's Advances regulation to prohibit the Banks from imposing on or accepting from a member a fee in lieu of mandatory redemption of the member's excess capital stock. Specifically, the interim final rule adds a new paragraph (b)(2) which provides that: ''A Bank may not impose on or accept from a member a fee in lieu of redeeming the member's excess Bank capital stock.''

In addition, the second sentence of current § 935.15(b), which is redesignated as paragraph (b)(1), is revised to clarify that the Bank's implementation of its redemption policy, and not just the timing of redemptions, shall be consistent with the requirement of section 7(j) of the Bank Act (12 U.S.C. 1427(j)) that the affairs of the Bank shall be administered fairly and impartially and without discrimination in favor of or against any member borrower.

This action is taken as an interim final rule, effective on the date of publication in the **Federal Register**, because the Bank's proposed fee policy is intended to be effective on March 31, 1999.

III. Issues For Consideration

Reducing Levels of Excess Capital Stock by Prohibiting Payment of Stock Dividends and Requiring Unilateral Redemption of Excess Capital Stock

The Finance Board believes that the Banks' levels of excess capital stock should be significantly reduced. As discussed above, the Banks are substantially overcapitalized and, thus, reduction in the amount of their excess capital would not adversely affect the safety and soundness of the Banks. The statutory minimum capital stock requirements guarantee that a Bank's capital stock will grow as the scope of its operations increases.

As discussed above, excess capital stock requires the Banks to generate earnings, through investments in non-core mission assets, in order to pay dividends on such stock, which is not needed to capitalize advances and other core mission assets. The Banks' arbitrage activities for this purpose detract from the mission of the Banks to promote housing finance and community investment, by encouraging activities not related to the Banks' mission and thereby detracting from the financial incentive to engage in mission-related activity. A reduction in the amount of excess capital stock would reduce the amount of capital stock on which dividends must be paid, thereby

reducing the level of arbitrage activities conducted in order to generate earnings to pay dividends on such capital stock.

One cause of the Banks' excess capital stock levels is the payment by some Banks of stock dividends rather than cash dividends to members. Prohibiting the Banks from paying stock dividends would help reduce excess capital stock levels in the Bank System and the consequent arbitrage activities.

Another way to reduce excess capital stock in the Bank System and thereby reduce arbitrage activities in non-core mission assets by the Banks, would be to require the Banks to unilaterally redeem members' excess capital stock. In the past year, five Banks unilaterally redeemed their excess capital stock expressly for the purpose of reducing the amount of their money market investments.

The Finance Board recognizes that payment of stock dividends has Federal tax advantages to members over payment of cash dividends, and that excess capital stock redemptions incur Federal tax liabilities for members. However, the private financial advantage to members from minimizing their taxes through the payment of stock dividends, while having no safety and soundness implications for the Banks, ultimately detracts from the Banks' housing finance and community investment mission and serves no other legitimate business purpose for the Banks.

Accordingly, simultaneously with this rulemaking, the Finance Board in a separate Advance Notice of Proposed Rulemaking (ANPRM) published elsewhere in this issue of the **Federal Register**, is requesting comment on how, by what means, and to what extent prohibiting or limiting the Banks' ability to pay stock dividends to members would assist the Finance Board in achieving the goal of reducing excess capital stock in the Bank System. Similarly, the Finance Board is requesting comment on whether the Banks should be required to unilaterally redeem members' excess Bank capital stock to help achieve the goal of reducing excess capital stock in the Bank System. Regarding required unilateral redemption of excess capital stock, the Finance Board specifically requests comment on whether a member should be allowed to maintain some amount of excess capital stock, *e.g.*, 10 percent of its total minimum capital stock requirement, in anticipation of fluctuations in its assets or outstanding advances that may affect its minimum capital stock requirement. The Finance Board also requests comment on what the timing of unilateral redemptions should be, *e.g.*, no less frequently than quarterly, semi-annually, or annually at the time of the Banks' adjustments of the members' minimum capital stock requirements? The Finance Board also requests comment on whether the currently required 15 days' notice to members before redemption should be retained or modified. In addition, the Finance Board requests comment on whether § 933.23 of the Finance Board's membership regulation, which permits a member to purchase excess capital stock if approved by the Bank, should be removed or modified. *See* 12 CFR 933.23.

In the alternative, the Finance Board requests comment on whether the Banks should be permitted to hold excess capital stock, but be prohibited from paying dividends on such stock, as a way to reduce the Banks' arbitrage activities with non-core mission assets. The Finance Board also requests comment on whether and to what extent excess capital stock holdings could be allowed so long as they are not being leveraged in the consolidated obligations market. In addition, the Finance Board requests comment on whether excess capital stock holdings should be permitted for a limited period of time, such as up to six months, where the member indicates that it intends to increase its advance borrowings during that time period.

Comments received in response to the ANPRM will be reviewed and considered by the Finance Board in preparation for further action in connection with the issues discussed in the ANPRM.

IV. Regulatory Flexibility Act

Because no notice of proposed rulemaking is required for this interim final rule, the provisions of the Regulatory Flexibility Act (5 U.S.C. 601 *et seq.*) do not apply.

V. Paperwork Reduction Act

This interim final rule does not contain any collections of information pursuant to the Paperwork Reduction Act of 1995. *See* 44 U.S.C. 3501 *et seq.* Therefore, the Finance Board has not submitted any information to the Office of Management and Budget for review.

VI. Notice and Public Participation

The Finance Board for good cause finds that the notice and public comment procedure required by the Administrative Procedure Act is impracticable, unnecessary or contrary to the public interest in this instance, because the change made by this interim final rule prohibits an immediately pending Bank action that would detract from the Banks' mission to promote housing finance and community investment. *See* 5 U.S.C. 553(b)(3)(B).

List of Subjects in 12 CFR Part 935

Credit, Federal home loan banks, Reporting and recordkeeping requirements.

Accordingly, the Finance Board hereby amends title 12, chapter IX, part 935 of the *Code of Federal Regulations* as follows:

PART 935—ADVANCES

1. The authority citation for part 935 continues to read as follows:

Authority: 12 U.S.C. 1422a(a)(3), 1422b(a)(1), 1426, 1429, 1430, 1430b, 1431.

2. Section 935.15 is amended by revising paragraph (b) to read as follows:

§ 935.15 Capital stock requirements; unilateral redemption of excess stock.

* * * * *

(b) *Unilateral redemption of excess capital stock; fee in lieu prohibited.* (1) A Bank, after providing 15 calendar days advance written notice to a member, may require the redemption of that amount of the member's Bank capital stock that exceeds the capital stock requirements set forth in paragraph (a) of this section or, in the case of a non-QTL member, the capital stock requirements set forth in § 935.13(a)(1)(ii) of this part, provided the minimum amount required in sections 6(b)(1) and 10(e)(3) of the Act is maintained. The Bank shall have the discretion to determine the timing of such unilateral redemption. The Bank's implementation of its redemption policy shall be consistent with the requirement of section 7(j) of the Act (12 U.S.C. 1427(j)) that the affairs of the Bank shall be administered fairly and impartially and without discrimination in favor of or against any member borrower.

(2) A Bank may not impose on or accept from a member a fee in lieu of redeeming the member's excess Bank capital stock.

Dated: March 19, 1999.

By the Board of Directors of the Federal Housing Finance Board.

Bruce A. Morrison,

Chairman.

[FR Doc. 99–8357 Filed 4–5–99; 8:45 am]

BILLING CODE 6725–01–P

FEDERAL HOUSING FINANCE BOARD

12 CFR Parts 933, 934, 935

[No. 99–22]

RIN 3069–AA85

Mandatory Excess Capital Stock Redemption; Prohibited Stock Dividends

AGENCY: Federal Housing Finance Board.

ACTION: Advance notice of proposed rulemaking (ANPRM).

SUMMARY: The Federal Housing Finance Board (Finance Board) is requesting public comment on how, by what means, and to what extent prohibiting or limiting the ability of the Federal Home Loan Banks (Banks) to pay stock dividends to members would assist the Finance Board in achieving the goal of reducing excess capital stock in the Bank System. Similarly, the Finance Board is requesting comment on whether the Banks should be required to unilaterally redeem members' excess Bank capital stock to help achieve the goal of reducing excess capital stock in the Bank System.

DATES: Comments must be received in writing on or before May 6, 1999.

ADDRESSES: Comments should be mailed to: Elaine L. Baker, Secretary to the Board, Federal Housing Finance Board, 1777 F Street, NW, Washington, DC 20006. Comments will be available for public inspection at this address.

FOR FURTHER INFORMATION CONTACT: Joseph A. McKenzie, Deputy Chief Economist, (202) 408–2845, Office of Policy, Research and Analysis; or Sharon B. Like, Senior Attorney-Advisor, (202) 408–2930, or Jane S. Converse, Senior Attorney-Advisor, (202) 408–2976, Office of General Counsel, Federal Housing Finance Board, 1777 F Street, NW, Washington, DC 20006.

SUPPLEMENTARY INFORMATION:

I. Statutory and Regulatory Background

A. The Banks' Housing Finance and Community Investment Mission

The Federal Home Loan Bank System (Bank System) is comprised of 12 District Banks that are federally chartered and managed by boards of directors that set policies pursuant to regulations established by the Finance Board. As government-sponsored enterprises (GSEs), the Banks act as intermediaries in the capital markets, raising funds on favorable terms and passing the proceeds on to member institutions in the form of advances (loans).

Under section 10(a) of the Federal Home Loan Bank Act (Bank Act) and part 935 of the Finance Board's regulations, the Banks have broad authority to make advances in support of housing finance, which includes community investment finance. *See* 12 U.S.C. 1430 (a), (i), (j); 12 CFR part 935. The Banks also are required to offer two programs, the Affordable Housing Program (AHP) and the Community Investment Program (CIP), to provide subsidized or at-cost advances, respectively, in support of unmet housing finance or economic development credit needs. *See* 12 U.S.C. 1430 (i), (j); 12 CFR parts 960, 970. In addition, section 10(j)(10) of the Bank Act, as implemented by a recently issued Finance Board regulation, authorizes the Banks to establish Community Investment Cash Advance (CICA) Programs for community lending, defined as providing financing for economic development projects for targeted beneficiaries. *See* 12 U.S.C. 1430(j)(10); 63 FR 65536 (Nov. 27, 1998).

The Bank Act provides that the Finance Board's primary duty is to ensure that the Banks operate in a financially safe and sound manner. *See id.* section 1422a(a)(3)(A). The Bank Act further provides that, to the extent consistent with this primary duty, the Finance Board also is responsible for supervising the Banks, ensuring that the Banks carry out their housing finance mission, and ensuring that the Banks remain adequately capitalized and able to raise funds in the capital markets. *See id.* section 1422a(a)(3)(B).

B. Statutory and Regulatory Minimum Capital Stock, Redemption and Dividend Provisions

Under the Bank Act and implementing Finance Board regulations, a member's required minimum capital stock investment in its Bank is the greater of: (1) 1 percent of the member's aggregate unpaid loan principal (defined as the member's home mortgage loans, home purchase contracts, and similar obligations) but not less than $500; (2) 0.3 percent of the member's total assets; or (3) 5 percent of total advances outstanding to the member. In the case of members that are not ''qualified thrift lenders'' (QTLs), the third option is computed as 5 percent of total advances outstanding to the member divided by the member's ''actual thrift investment percentage'' (as defined in 12 U.S.C. 1467a(m)). *See* 12 U.S.C. 1426(b)(1), (2), (4); 1430(c), (e)(1), (3); 12 CFR 933.20(a).

Section 6(b)(1) further provides that the Bank shall annually adjust, at such time and in such manner as the Finance Board may by regulations or otherwise prescribe, the amount of capital stock held by each member so that such member shall have invested its minimum capital stock requirement. *See id.* section 1426(b)(1); 12 CFR 933.22(b)(1). Section 6(b)(1) also provides that if the Bank finds that the investment of any member in capital stock is greater than that required under section 6(b), the Bank may, unless prohibited by the Finance Board, in its discretion and upon application of the member, retire the capital stock of such member in excess of the amount so required. *See id.* section 1426(b)(1); 12 CFR 933.22(b)(2).

Section 16(a) of the Bank Act provides, among other things, that dividends may be paid by the Banks with the approval of the Finance Board. *See* 12 U.S.C. 1436(a). Section 6(g) of the Bank Act provides that all stock of any Bank shall share in dividend distributions without preference. *See id.* section 1426(g). Section 934.17 of the Finance Board's regulations on the operations of the Banks implements these provisions by providing, among other things, that dividends may be paid by the Banks in cash or in the form of stock. *See* 12 CFR 932.3; 63 FR 65683, 65687 (Nov. 30, 1998) (redesignating § 932.3 as § 934.17).

Section 935.15(b) of the Finance Board's Advances Regulation provides that ''[a] Bank, after providing 15 calendar days advance written notice to a member, may unilaterally redeem that amount of the member's Bank stock that exceeds'' the member's minimum statutory and regulatory capital stock requirements. *See* 12 CFR 935.15(b). Section 935.15(b) further provides that the Bank shall have discretion to determine the timing of such unilateral redemption, provided that the Bank's redemption policy is consistent with the requirement in section 7(j) of the Bank Act that the affairs of the Bank shall be administered fairly and impartially and without discrimination in favor of or against member borrowers, *see* 12 U.S.C. section 1427(j).

The Bank Act and § 935.15(b) of the Advances regulation are silent on whether a Bank, in administering its mandatory redemption policy, may impose on or accept from a member a fee in lieu of redeeming the member's excess Bank capital stock.

II. Interim Final Rule Prohibiting Fee In Lieu of Mandatory Excess Capital Stock Redemption—§ 935.15(b)

A. Proposed Fee In Lieu of Mandatory Excess Capital Stock Redemption

A Bank has adopted a policy, effective March 31, 1999, pursuant to which the Bank generally will redeem that amount of each member's capital stock exceeding 115 percent of the member's minimum statutory capital stock requirement, with an option, if lawful and appropriate, for the member to pay a fee to the Bank in lieu of such redemption. The Bank has requested confirmation from the Finance Board that the proposed fee would be authorized under the Bank Act and Finance Board regulations.

As noted above, the Bank Act and § 935.15(b) of the Finance Board's Advances regulation are silent on whether a Bank may impose on or accept from a member a fee in lieu of redeeming the member's excess Bank capital stock. Even though the Bank Act is susceptible to an interpretation that the payment of such fees would be authorized under law, the Finance Board has determined that allowing the payment of such fees would detract from the agency's ongoing efforts and initiatives to ensure that the Banks carry out their housing finance and community investment mission, as discussed below. Therefore, simultaneously with this ANPRM, the Finance Board has adopted a separate interim final rule, published elsewhere in this issue of the **Federal Register**, that prohibits the payment of such fees. Although the interim final rule is effective on the date of publication in the **Federal Register**, the Finance Board is requesting comment on all aspects of that rule during a 30-day comment period.

According to the Bank, the purpose of the Bank's proposed redemption policy is to enhance the Bank's competitiveness vis a vis other Banks by increasing its earnings per share and therefore its dividend rate. The Bank forecasts that mandatory redemption of surplus capital stock or payment of the fee in lieu of redemption would add approximately 12 basis points to the Bank's quarterly dividend. The Bank has a number of large members owned by holding companies that also have subsidiaries located in other Bank districts. The Bank is concerned that these members may discontinue borrowing from the Bank and that their affiliates will become members and borrow from these other Banks because those Banks pay higher dividend rates than the Bank.

Under the Bank's proposed policy, the Bank would unilaterally redeem ''surplus'' capital stock (defined by the Bank as capital stock in excess of 115 percent of minimum capital stock requirements but not less than $100,000) held by all members, unless the member pays a fee to the Bank, on a monthly basis, to continue holding its surplus capital stock. The 115 percent threshold was adopted to allow membership flexibility for future borrowings from the Bank and absorb the stock dividends. The $100,000 minimum was adopted in order to reduce the operational impact of the redemption policy on smaller members. The Bank states that the fee, which is 1.65 percent of the value of a member's surplus capital stock, was designed to make the Bank financially indifferent to a member's decision to continue to hold surplus capital stock. The fee income paid to the Bank would act as an offset to the dividend dilution caused by those members holding surplus capital stock.

As of August 31, 1998, the Bank had excess capital stock of $554 million, or 14 percent of its total capital of $3.9 billion. The Bank's total ''surplus'' capital stock, as of August 31, 1998, was $312 million. One mandatory thrift member held 70 percent of the Bank's total surplus capital stock as of that date. The Bank has excess capital stock, in part, because it pays members quarterly stock dividends rather than cash dividends. The Bank has indicated that paying a stock dividend rather than a cash dividend provides tax benefits for its members, and the Bank intends to continue paying stock dividends for this reason.

B. The Banks Are Significantly Overcapitalized

By many standards, the 12 Banks are significantly overcapitalized. As of December 31, 1998, the 12 Banks had total capital stock of $22.8 billion, with $2.8 billion, or 12.6 percent, of this amount constituting capital stock in excess of the Banks' statutory minimum capital stock requirements. On a risk-adjusted basis (using the current risk-based standards applicable to federally regulated depositories), the total capital is estimated at 22 percent of the Banks' total assets, a level far above that of large commercial banks and other housing GSEs.[1] The highest percentage of excess capital stock to total capital stock at a Bank was 30.1 percent, and the lowest was 1.2 percent.

Even without excess capital stock in the Bank System, *i.e.*, capital stock at only the statutorily required minimum stock levels, the Banks would be significantly overcapitalized. A redemption of all excess capital stock in the Bank System would reduce the Banks' risk-based capital ratio to approximately 19.2 percent.

Members have excess capital stock holdings, in part, because they receive stock dividends from the Banks. Currently, five Banks pay stock dividends, and seven Banks pay cash dividends. The Internal Revenue Service has ruled that the issuance of stock dividends by the Banks is not taxable income for members. *See* IRS Rev. Rul. 90–98, November 26, 1990, 1990–48–I.R.B.4, 26 CFR 1.305–2. However, cash dividends and redemptions of stock received as dividends generally are taxable income to members. *See* 26 U.S.C. 301(c), 302(a). Because of the deferred tax liability associated with stock dividends, many members may have allowed their stock dividends to accumulate rather than request redemption of their stock, as is their option under the Bank Act. *See* 12 U.S.C. 1426(b)(1). The members' holdings of excess capital stock are concentrated, with the largest holder of excess capital stock having 9 percent of the Bank System's total excess capital stock. The top five holders of excess capital stock represent 19 percent of the Bank System's total excess capital stock.

Excess capital stock holdings also arise where members' total assets, home mortgage loans or outstanding advances have decreased since their last capital stock purchases, or where members have changed to QTL status, thereby reducing their advances-based capital stock requirement. Members may continue to hold some excess stock in order to minimize the transaction costs associated with capital stock purchases that would be required if the member's levels of total assets, home mortgage loans or outstanding advances fluctuate.

C. The Banks' Arbitrage Activities With Non-Core Mission Assets Detract From the Mission of the Banks To Promote Housing Finance and Community Investment

The Banks pay dividends on all capital stock, including excess capital

[1] A depository institution generally is deemed to be ''well-capitalized'' if it has a total risk-based capital rtio of 10 percent or greater, a Tier 1 risk-based capital ratio of 6 percent or greater, and a leverage ratio of 5 percent or greater. *See* 12 CFR 6.4(b)(1), 208.33(b)(1), 325.103(b)(1), 565.4(b)(1). The minimum capital requirement for the other housing GSEs—the Federal National Mortgage Association and the Federal Home Loan Mortgage Corporation—generally is 2.5 percent of on-balance sheet assets plus .45 percent of off-balance sheet obligations. *See* 12 U.S.C. 4612(a).

stock. Since the average Bank System dividend rate of 6.64 percent exceeds the rate of return a Bank can earn by investing members' capital in core mission assets, a Bank must leverage its excess capital stock to pay dividends. The leveraging cannot involve advances, since they are already capitalized by required capital stock. Thus, the Banks must leverage excess capital stock by investing in non-core mission assets in order to generate sufficient earnings to pay a uniform dividend on all capital stock, including the excess capital stock.

There is a strong correlation between the amount of excess capital stock at a Bank and the level of that Bank's non-core mission assets. In demonstrating the correlation between excess capital stock and non-mission-related assets, the Finance Board looked at the concept of ''core mission assets,'' defined as Bank advances, which include AHP advances and subsidies, CIP advances, community lending advances, Mortgage Partnership Finance assets, and other assets generated for the Banks by members and nonmember borrowers. Core mission assets do not include mortgage-backed securities (MBS) and money market instruments, which are not generated for the Banks by members or nonmember borrowers and their purchase by the Banks does not materially facilitate housing and community lending by members or nonmember borrowers. As demonstrated in the following table, the Banks with the highest levels of excess capital stock also have the lowest ratios of core mission assets to consolidated obligations:

EXCESS CAPITAL STOCK AND CORE MISSION ASSETS

Bank	Core mission assets to consolidated obligations (%)	Descending rank	Excess capital stock to total capital stock (%)	Rank
A	86.5	1	10.4	7
B	85.1	2	1.0	1
C	81.8	3	10.2	6
D	81.3	4	4.2	2
E	80.7	5	3.0	3
F	79.7	6	7.8	4
G	70.5	7	9.3	5
H	69.4	8	17.1	10
I	65.4	9	26.8	11
J	63.8	10	15.2	8
K	59.9	11	30.1	12
L	58.6	12	16.2	9
Bank System	75.8		12.6	

Approximately 75.8 percent of total Bank System consolidated obligations are invested in core mission assets.

The four Banks with the highest ratios of core mission assets to consolidated obligations had ratios of excess capital stock to total capital stock of 10.4 percent, 1.2 percent, 10.4 percent, and 4.2 percent. The five Banks with the lowest ratios of core mission assets to consolidated obligations had the highest ratios of excess capital stock to total capital stock. Of these five, three pay stock dividends, and one pays the highest dividend in the Bank System. At present, core mission assets are no more than 86.5 percent of consolidated obligations at any Bank.

The Finance Board believes that the Banks' arbitrage activities for the purpose of generating sufficient earnings to pay adequate dividends on excess capital stock detract from the mission of the Banks to promote housing finance and community investment, by encouraging activities not related to the Banks' mission and thereby detracting from the financial incentive to engage in mission-related activity. While the Banks' interest in paying a reasonable dividend to members is a legitimate business consideration, and it is appropriate to redeem excess capital stock to assist in this purpose, allowing members to pay a fee in lieu of such mandatory redemption would perpetuate excess capital stock at the Banks and the Banks' continued need to invest in non-core mission assets to pay dividends on such excess stock.

D. Amendment of Advances Regulation To Prohibit Payment of Fee In Lieu of Mandatory Excess Capital Stock Redemption—§ 935.15(b)

For the reasons discussed above, the interim final rule adopted by the Finance Board and published elsewhere in this issue of the **Federal Register** amends § 935.15(b) of the Finance Board's Advances regulation to prohibit the Banks from imposing on or accepting from a member a fee in lieu of mandatory redemption of the member's excess capital stock.

III. Issues for Consideration

Reducing Levels of Excess Capital Stock By Prohibiting Payment of Stock Dividends and Requiring Unilateral Redemption of Excess Capital Stock—§§ 934.17, 935.15(b)

The Finance Board believes that the Banks' levels of excess capital stock should be significantly reduced. As discussed above, the Banks are substantially overcapitalized and, thus, reduction in the amount of their excess capital would not adversely affect the safety and soundness of the Banks. The statutory minimum capital stock requirements guarantee that a Bank's capital stock will grow as the scope of its operations increases.

As discussed above, excess capital stock requires the Banks to generate earnings, through investments in non-core mission assets, in order to pay dividends on such stock, which is not needed to capitalize advances and other core mission assets. The Banks' arbitrage activities for this purpose detract from the mission of the Banks to promote housing finance and community investment, by encouraging activities not related to the Banks' mission and thereby detracting from the financial incentive to engage in mission-related activity. A reduction in the amount of excess capital stock would reduce the amount of capital stock on which dividends must be paid, thereby reducing the level of arbitrage activities conducted in order to generate earnings to pay dividends on such capital stock.

One cause of the Banks' excess capital stock levels is the payment by some Banks of stock dividends rather than

cash dividends to members. Prohibiting the Banks from paying stock dividends would help reduce excess capital stock levels in the Bank System and the consequent arbitrage activities.

Another way to reduce excess capital stock in the Bank System and thereby reduce arbitrage activities in non-core mission assets by the Banks, would be to require the Banks to unilaterally redeem members' excess capital stock. In the past year, five Banks unilaterally redeemed their excess capital stock expressly for the purpose of reducing the amount of their money market investments.

The Finance Board recognizes that payment of stock dividends has Federal tax advantages to members over payment of cash dividends, and that excess capital stock redemptions incur Federal tax liabilities for members. However, the private financial advantage to members from minimizing their taxes through the payment of stock dividends, while having no safety and soundness implications for the Banks, ultimately detracts from the Banks' housing finance and community investment mission and serves no other legitimate business purpose for the Banks.

Accordingly, the Finance Board is requesting comment on how, by what means, and to what extent prohibiting or limiting the Banks' ability to pay stock dividends to members would assist the Finance Board in achieving the goal of reducing excess capital stock in the Bank System. *See* 12 CFR 934.17. Similarly, the Finance Board is requesting comment on whether the Banks should be required to unilaterally redeem members' excess Bank capital stock to help achieve the goal of reducing excess capital stock in the Bank System. *See id.* § 935.15(b). The Finance Board specifically requests comment on whether a member should be allowed to maintain some amount of excess capital stock, *e.g.*, 10 percent of its total minimum capital stock requirement, in anticipation of fluctuations in its assets or outstanding advances that may affect its minimum capital stock requirement. The Finance Board also requests comment on what the timing of unilateral redemptions should be, *e.g.*, no less frequently than quarterly, semi-annually, or annually at the time of the Banks' adjustments of the members' minimum capital stock requirements? The Finance Board also requests comment on whether the currently required 15 days' notice to members before redemption should be retained or modified. In addition, the Finance Board requests comment on whether § 933.23 of the Finance Board's membership regulation, which permits members to purchase excess capital stock if approved by the Bank, should be removed or modified. *See id.* § 933.23.

In the alternative, the Finance Board requests comment on whether the Banks should be permitted to hold excess capital stock, but be prohibited from paying dividends on such stock, as a way to reduce the Banks' arbitrage activities with non-core mission assets. The Finance Board also requests comment on whether and to what extent excess capital stock holdings could be allowed so long as they are not being leveraged in the consolidated obligations market. In addition, the Finance Board requests comment on whether excess capital stock holdings should be permitted for a limited period of time, such as up to six months, where the member indicates that it intends to increase its advance borrowings during that time period.

Comments received in response to this ANPRM will be reviewed and considered by the Finance Board in preparation for further action in connection with the issues discussed in this ANPRM.

Dated: March 19, 1999.

By the Board of Directors of the Federal Housing Finance Board.

Bruce A. Morrison,

Chairman.

[FR Doc. 99–8358 Filed 4–5–99; 8:45 am]

BILLING CODE 6725–01–P

Reader Aids

Federal Register

Vol. 64, No. 65

Tuesday, April 6, 1999

CUSTOMER SERVICE AND INFORMATION

Federal Register/Code of Federal Regulations

General Information, indexes and other finding aids	**202–523–5227**
Laws	**523–5227**
Presidential Documents	
Executive orders and proclamations	**523–5227**
The United States Government Manual	**523–5227**
Other Services	
Electronic and on-line services (voice)	**523–4534**
Privacy Act Compilation	**523–3187**
Public Laws Update Service (numbers, dates, etc.)	**523–6641**
TTY for the deaf-and-hard-of-hearing	**523–5229**

ELECTRONIC RESEARCH

World Wide Web

Full text of the daily Federal Register, CFR and other publications:

http://www.access.gpo.gov/nara

Federal Register information and research tools, including Public Inspection List, indexes, and links to GPO Access:

http://www.nara.gov/fedreg

E-mail

PENS (Public Law Electronic Notification Service) is an E-mail service that delivers information about recently enacted Public Laws. To subscribe, send E-mail to

listproc@lucky.fed.gov

with the text message:

subscribe publaws-l <firstname> <lastname>

Use listproc@lucky.fed.gov only to subscribe or unsubscribe to PENS. We cannot respond to specific inquiries at that address.

Reference questions. Send questions and comments about the Federal Register system to:

info@fedreg.nara.gov

The Federal Register staff cannot interpret specific documents or regulations.

FEDERAL REGISTER PAGES AND DATES, APRIL

15633–15914 1
15915–16332 2
16333–16600 5

CFR PARTS AFFECTED DURING APRIL

At the end of each month, the Office of the Federal Register publishes separately a List of CFR Sections Affected (LSA), which lists parts and sections affected by documents published since the revision date of each title.

3 CFR

Executive Orders:
11223 (Amended by EO 13118) 16595
11269 (Amended by EO 13118) 16595
11958 (Amended by EO 13118) 16595
12163 (Amended by EO 13118) 16595
12188 (Amended by EO 13118) 16595
12260 (Amended by EO 13118) 16595
12293 (Amended by EO 13118) 16595
12301 (Amended by EO 13118) 16595
12599 (Amended by EO 13118) 16595
12703 (Amended by EO 13118) 16595
12884 (Amended by EO 13118) 16595
12981 (Amended by EO 13117) 16391
13116 16333
13117 16391

Memorandums:
March 23, 1999 (Amended by EO 13118) 16595

Administrative Orders:
Presidential Determination No. 99-18 of March 25, 1999 16337

5 CFR

532 15915
870 00000
890 15633
1200 15916

7 CFR

301 15916
1753 00000

Proposed Rules:
28 15937
340 16364
905 15634
944 15634
1000 16026
1001 16026
1002 16026
1004 16026
1005 16026
1006 16026
1007 16026
1012 16026
1013 16026
1030 16026
1032 16026
1033 16026
1036 16026
1040 16026
1044 16026
1046 16026
1049 16026
1050 16026
1064 16026
1065 16026
1068 16026
1076 16026
1079 16026
1106 16026
1124 16026
1126 16026
1131 16026
1134 16026
1135 16026
1137 16026
1138 16026
1139 16026

9 CFR

1 15918
3 15918

Proposed Rules:
93 00000
201 15938

10 CFR

2 ..... 15636, 15920
10 15636
11 15636
25 15636
95 15636

Proposed Rules:
170 15876
171 15876

12 CFR

213 00000
226 00000
330 15653
611 00000
620 00000
935 00000

Proposed Rules:
933 00000
934 00000
935 00000

13 CFR

Proposed Rules:
120 15942
121 15708

14 CFR

39 ..... 15657, 15659, 15661, 15669, 15920, 16339, 00000
71 ..... 15673, 15674, 15675, 15676, 15678, 15679, 16024,

16340, 16341, 16342, 16343, 16344
91 15912
Proposed Rules:
39 ....16364, 16366, 00000
71 ....15708, 16024, 16368, 16369, 16370, 16371
119 16298
121 16298
129 16298
135 16298
183 16298

17 CFR

275 15680
279 15680

19 CFR

178 00000
192 00000
10 16345
18 16345
113 16345
178 16345
Proposed Rules:
146 15873

21 CFR

26 16347
510 15683
520 ....15683, 15684
522 ....15683, 15685
558 15683
Proposed Rules:
1 15944
101 15948

22 CFR

Ch. II 15685
Ch. VI 15686

24 CFR

100 16324

26 CFR

1 ....15686, 15687
7 15687
31 15687
301 00000
602 ....15687, 15688, 15873
Proposed Rules:
1 16372

30 CFR

Proposed Rules:
206 15949

33 CFR

100 16348
117 ....16350, 00000
165 ....16348, 00000
Proposed Rules:
175 15709
177 15709
179 15709
181 15709
183 15709

40 CFR

52 ....15688, 15922
90 16526
261 00000
300 ....15926, 16351
Proposed Rules:
52 ....15711, 15949, 00000
70 00000
82 16373

41 CFR

Ch. 301 16352
60-250 15690
60-999 15690

45 CFR

260 00000
261 00000
262 00000
263 00000
264 00000
265 00000
Proposed Rules:
1635 16383

46 CFR

Proposed Rules:
10 15709
15 15709
24 15709
25 15709
26 15709
28 15709
70 15709
169 15709
175 15709

47 CFR

69 16353
Proposed Rules:
0 16388
1 00000
2 00000
25 00000
69 16389
73 ....15712, 15713, 15714, 15715, 16388, 16396
76 16388

48 CFR

701 00000
703 00000
715 00000
731 00000
752 00000
909 00000
970 00000
1333 00000

49 CFR

195 15926
571 16358
581 16359
Proposed Rules:
578 00000

50 CFR

17 15691
648 ....15704, 16361, 16362
679 ....16361, 16362, 00000
Proposed Rules:
17 16397
223 ....16396, 16397
224 16397
226 16397
600 16414
648 16417

REMINDERS

The items in this list were editorially compiled as an aid to Federal Register users. Inclusion or exclusion from this list has no legal significance.

RULES GOING INTO EFFECT APRIL 6, 1999

ENVIRONMENTAL PROTECTION AGENCY

Hazardous waste:

Identification and listing—

Exclusions; published 4-6-99

FEDERAL HOUSING FINANCE BOARD

Federal home loan bank system:

Mandatory excess capital stock redemption; prohibition of fee payment in lieu of stock redemption; published 4-6-99

COMMENTS DUE NEXT WEEK

AGRICULTURE DEPARTMENT

Agricultural Marketing Service

Avocados grown in—

South Florida; comments due by 4-16-99; published 3-17-99

Prunes (dried) produced in California; comments due by 4-15-99; published 1-25-99

AGRICULTURE DEPARTMENT

Farm Service Agency

Program regulations:

Preferred lender program implementation and guaranteed loan regulations streamlining; comments due by 4-13-99; published 2-12-99

AGRICULTURE DEPARTMENT

Rural Business-Cooperative Service

Program regulations:

Preferred lender program implementation and guaranteed loan regulations streamlining; comments due by 4-13-99; published 2-12-99

AGRICULTURE DEPARTMENT

Rural Housing Service

Program regulations:

Preferred lender program implementation and guaranteed loan regulations streamlining; comments due by 4-13-99; published 2-12-99

AGRICULTURE DEPARTMENT

Rural Utilities Service

Program regulations:

Preferred lender program implementation and guaranteed loan regulations streamlining; comments due by 4-13-99; published 2-12-99

COMMERCE DEPARTMENT

Census Bureau

Foreign trade statistics:

Automated Export System; shipper's export data; electronic filing; comments due by 4-13-99; published 2-12-99

COMMERCE DEPARTMENT

National Oceanic and Atmospheric Administration

Fisheries assistance programs; fishing capacity reduction program; comments due by 4-12-99; published 2-11-99

Fishery conservation and management:

Northeastern United States fisheries—

Northeast multispecies; comments due by 4-13-99; published 3-29-99

DEFENSE DEPARTMENT

Federal Acquisition Regulation (FAR):

Progress payments and related financing policies; comments due by 4-12-99; published 2-10-99

EDUCATION DEPARTMENT

Special education and rehabilitative services:

Infants and toddlers with disabilities early intervention program; advice and recommendations request; comments due by 4-12-99; published 3-12-99

ENVIRONMENTAL PROTECTION AGENCY

Air pollutants, hazardous; national emission standards:

Secondary aluminum production; comments due by 4-12-99; published 2-11-99

Air pollution control; new motor vehicles and engines:

New nonroad spark-ignition engines rated above 19 kilowatts and new land-based recreational spark-ignition engines; comments due by 4-12-99; published 2-8-99

Air quality implementation plans; approval and promulgation; various States:

Delaware; comments due by 4-12-99; published 3-11-99

Iowa; comments due by 4-12-99; published 3-11-99

Kentucky; comments due by 4-14-99; published 3-15-99

Air quality implementation plans; approval and promulgation; various States; air quality planning purposes; designation of areas:

Ohio; comments due by 4-16-99; published 3-17-99

Air quality implementation plans; approval and promulgation; various States:

Oregon; comments due by 4-14-99; published 3-15-99

Texas; comments due by 4-14-99; published 3-15-99

Hazardous waste:

Mixed low-level radioactive waste; storage, treatment, and disposition; comments due by 4-15-99; published 3-1-99

FEDERAL COMMUNICATIONS COMMISSION

Common carrier services:

Inter-carrier compensation for Internet service provider (ISP)-bound traffic; comments due by 4-12-99; published 3-24-99

Radio broadcasting:

Broadcast and cable EEO rules and policies; extension; comments due by 4-15-99; published 4-5-99

Low power FM radio service; creation and operation; comments due by 4-12-99; published 2-16-99

FEDERAL HOUSING FINANCE BOARD

Federal home loan bank system:

Consolidated obligations; joint and several liability allocation; comments due by 4-12-99; published 2-11-99

FEDERAL RETIREMENT THRIFT INVESTMENT BOARD

Thrift savings plan:

Death benefits; transfer into G Fund after participant's death; comments due by 4-12-99; published 2-11-99

GENERAL SERVICES ADMINISTRATION

Federal Acquisition Regulation (FAR):

Progress payments and related financing policies; comments due by 4-12-99; published 2-10-99

Federal property management:

Purchase or lease determinations guidelines and use of private inspection, testing, and grading services; comments due by 4-12-99; published 2-10-99

Federal travel:

Travel and relocation expenses test programs; comments due by 4-12-99; published 2-10-99

HEALTH AND HUMAN SERVICES DEPARTMENT

Children and Families Administration

Personal Responsibility and Work Opportunity Reconciliation Act of 1996; implementation:

Child support enforcement program; revision or elimination of obsolete or inconsistent provisions; comments due by 4-12-99; published 2-9-99

HEALTH AND HUMAN SERVICES DEPARTMENT

Food and Drug Administration

Food for human consumption:

Food labeling—

Nutrient content claims; ''healthy'' definition; partial stay extension; comments due by 4-15-99; published 3-16-99

Human drugs and biological products:

In vivo radiopharmaceuticals used for diagnosis and monitoring—

Evaluation and approval; developing medical imaging drugs and biologics; guidance availability; comments due by 4-14-99; published 2-16-99

HEALTH AND HUMAN SERVICES DEPARTMENT

Health Care Financing Administration

Medicare:

Outpatient diabetes self-management training services; expanded coverage; comments due by 4-12-99; published 2-11-99

HOUSING AND URBAN DEVELOPMENT DEPARTMENT

Fair housing:

Fair Housing Act violations; civil penalties; comments due by 4-12-99; published 2-10-99

INTERIOR DEPARTMENT

Minerals Management Service

Royalty management:

Audit functions; delegation to States; comments due by 4-12-99; published 2-10-99

Federal and Indian leases; oil valuation; comments due by 4-12-99; published 3-12-99

INTERIOR DEPARTMENT

Reclamation Bureau

Farm operation in excess 960 acres, information requirements; and formerly excess land eligibility to receive non-full cost irrigation water; comments due by 4-12-99; published 3-11-99

INTERIOR DEPARTMENT

Surface Mining Reclamation and Enforcement Office

Permanent program and abandoned mine land reclamation plan submissions:

Pennsylvania; comments due by 4-12-99; published 3-12-99

Surface coal mining and reclamation operations:

Ownership and control mining operations; definitions, permit requirements, enforcement actions, etc.; comments due by 4-15-99; published 3-31-99

JUSTICE DEPARTMENT

Drug Enforcement Administration

Records, reports, and exports of listed chemicals:

Chemical mixtures that contain regulated chemicals; comments due by 4-16-99; published 2-12-99

JUSTICE DEPARTMENT

Immigration and Naturalization Service

Immigration:

Aliens—

Employment eligibility verification; acceptable receipts; comments due by 4-12-99; published 2-9-99

JUSTICE DEPARTMENT

Illegal Immigration Reform and Immigrant Responsibility Act and Debt Collection Improvement Act; implementation:

Employer sanctions, unfair immigration-related employment practice cases, and immigration-related document fraud; comments due by 4-13-99; published 2-12-99

NATIONAL AERONAUTICS AND SPACE ADMINISTRATION

Federal Acquisition Regulation (FAR):

Progress payments and related financing policies; comments due by 4-12-99; published 2-10-99

SECURITIES AND EXCHANGE COMMISSION

Securities and investment companies:

Electronic Data Gathering, Analysis, and Retrieval (EDGAR) system modernization; comments due by 4-15-99; published 3-16-99

Securities:

International disclosure standards; foreign private issuers conformance; comments due by 4-12-99; published 2-9-99

Registered broker dealers and transfer agents and Year 2000 compliance; operational capability requirements; comments due by 4-12-99; published 3-11-99

TRANSPORTATION DEPARTMENT

Coast Guard

Drawbridge operations:

Florida; comments due by 4-12-99; published 2-9-99

Massachusetts; comments due by 4-14-99; published 3-15-99

Ports and waterways safety:

Hudson River, NY; safety zone; comments due by 4-13-99; published 2-12-99

TRANSPORTATION DEPARTMENT

Federal Aviation Administration

Airworthiness directives:

Fairchild; comments due by 4-12-99; published 2-18-99

Fokker; comments due by 4-14-99; published 3-15-99

McDonnell Douglas; comments due by 4-16-99; published 3-2-99

Rolls-Royce Ltd.; comments due by 4-12-99; published 2-10-99

Texton Lycoming; comments due by 4-12-99; published 2-10-99

Class E airspace; comments due by 4-15-99; published 3-8-99

Restricted areas; comments due by 4-12-99; published 2-26-99

TRANSPORTATION DEPARTMENT

National Highway Traffic Safety Administration

Fuel economy standards:

Passenger autombiles; low volume manufacturer exemptions; comments due by 4-12-99; published 3-11-99

TREASURY DEPARTMENT

Alcohol, Tobacco and Firearms Bureau

Alcoholic beverages:

Distilled spirits, wine, and malt beverages; labeling and advertising—

Fill standards; comments due by 4-12-99; published 2-9-99

TREASURY DEPARTMENT

Customs Service

Automated Export System:

Shipper's export declarations and outbound vessel manifest information; electronic transmission; cross reference to Census Bureau regulations; comments due by 4-13-99; published 2-12-99

TREASURY DEPARTMENT

Internal Revenue Service

Income taxes:

Group-term life insurance coverage costs; uniform premium table; comments due by 4-13-99; published 1-13-99

Procedure and administration:

Timely mailing treated as timely filing/electronic postmark; comments due by 4-15-99; published 1-15-99

LIST OF PUBLIC LAWS

This is a continuing list of public bills from the current session of Congress which have become Federal laws. It may be used in conjunction with "P L U S" (Public Laws Update Service) on 202–523–6641. This list is also available online at http://www.nara.gov/fedreg.

The text of laws is not published in the **Federal Register** but may be ordered in "slip law" (individual pamphlet) form from the Superintendent of Documents, U.S. Government Printing Office, Washington, DC 20402 (phone, 202–512–1808). The text will also be made available on the Internet from GPO Access at http://www.access.gpo.gov/nara/index.html. Some laws may not yet be available.

H.R. 1212/P.L. 106–7

To protect producers of agricultural commodities who applied for a Crop Revenue Coverage PLUS supplemental endorsement for the 1999 crop year. (Apr. 1, 1999; 113 Stat. 12)

Last List April 2, 1999.

Public Laws Electronic Notification Service (PENS)

PENS is a free electronic mail notification service of newly enacted public laws. To subscribe, send E-mail to **listproc@lucky.fed.gov** with the text message:

subscribe PUBLAWS-L Your Name.

Note: This service is strictly for E-mail notification of new public laws. The text of laws is not available through this service. **PENS** cannot respond to specific inquiries sent to this address.