6–25–99
Vol. 64 No. 122
Pages 34109–34510

federal register

Friday
June 25, 1999

The **FEDERAL REGISTER** is published daily, Monday through Friday, except official holidays, by the Office of the Federal Register, National Archives and Records Administration, Washington, DC 20408, under the Federal Register Act (44 U.S.C. Ch. 15) and the regulations of the Administrative Committee of the Federal Register (1 CFR Ch. I). The Superintendent of Documents, U.S. Government Printing Office, Washington, DC 20402 is the exclusive distributor of the official edition.

The **Federal Register** provides a uniform system for making available to the public regulations and legal notices issued by Federal agencies. These include Presidential proclamations and Executive Orders, Federal agency documents having general applicability and legal effect, documents required to be published by act of Congress, and other Federal agency documents of public interest.

Documents are on file for public inspection in the Office of the Federal Register the day before they are published, unless the issuing agency requests earlier filing. For a list of documents currently on file for public inspection, see http://www.nara.gov/fedreg.

The seal of the National Archives and Records Administration authenticates the Federal Register as the official serial publication established under the Federal Register Act. Under 44 U.S.C. 1507, the contents of the **Federal Register** shall be judicially noticed.

The **Federal Register** is published in paper and on 24x microfiche. It is also available online at no charge as one of the databases on GPO Access, a service of the U.S. Government Printing Office.

The online edition of the **Federal Register** is issued under the authority of the Administrative Committee of the Federal Register as the official legal equivalent of the paper and microfiche editions (44 U.S.C. 4101 and 1 CFR 5.10). It is updated by 6 a.m. each day the **Federal Register** is published and it includes both text and graphics from Volume 59, Number 1 (January 2, 1994) forward.

GPO Access users can choose to retrieve online **Federal Register** documents as TEXT (ASCII text, graphics omitted), PDF (Adobe Portable Document Format, including full text and all graphics), or SUMMARY (abbreviated text) files. Users should carefully check retrieved material to ensure that documents were properly downloaded.

On the World Wide Web, connect to the **Federal Register** at http://www.access.gpo.gov/nara. Those without World Wide Web access can also connect with a local WAIS client, by Telnet to swais.access.gpo.gov, or by dialing (202) 512-1661 with a computer and modem. When using Telnet or modem, type swais, then log in as guest with no password.

For more information about GPO Access, contact the GPO Access User Support Team by E-mail at gpoaccess@gpo.gov; by fax at (202) 512–1262; or call (202) 512–1530 or 1–888–293–6498 (toll free) between 7 a.m. and 5 p.m. Eastern time, Monday–Friday, except Federal holidays.

The annual subscription price for the **Federal Register** paper edition is $555, or $607 for a combined **Federal Register,** Federal Register Index and List of CFR Sections Affected (LSA) subscription; the microfiche edition of the **Federal Register** including the Federal Register Index and LSA is $220. Six month subscriptions are available for one-half the annual rate. The charge for individual copies in paper form is $8.00 for each issue, or $8.00 for each group of pages as actually bound; or $1.50 for each issue in microfiche form. All prices include regular domestic postage and handling. International customers please add 25% for foreign handling. Remit check or money order, made payable to the Superintendent of Documents, or charge to your GPO Deposit Account, VISA, MasterCard or Discover. Mail to: New Orders, Superintendent of Documents, P.O. Box 371954, Pittsburgh, PA 15250–7954.

There are no restrictions on the republication of material appearing in the **Federal Register.**

How To Cite This Publication: Use the volume number and the page number. Example: 64 FR 12345.

SUBSCRIPTIONS AND COPIES

PUBLIC	
Subscriptions:	
Paper or fiche	**202–512–1800**
Assistance with public subscriptions	**512–1806**
General online information	**202–512–1530; 1–888–293–6498**
Single copies/back copies:	
Paper or fiche	**512–1800**
Assistance with public single copies	**512–1803**
FEDERAL AGENCIES	
Subscriptions:	
Paper or fiche	**523–5243**
Assistance with Federal agency subscriptions	**523–5243**

Printed on recycled paper.

Contents

Federal Register

Vol. 64, No. 122

Friday, June 25, 1999

Agricultural Marketing Service
RULES
Potatoes (Irish) grown in—
California and Oregon, 34113–34117
PROPOSED RULES
Kiwifruit grown in—
California, 34144–34154

Agricultural Research Service
NOTICES
Patent licenses; non-exclusive, exclusive, or partially exclusive:
Wisconsin Global Technologies, Ltd., et al., 34187

Agriculture Department
See Agricultural Marketing Service
See Agricultural Research Service
See Animal and Plant Health Inspection Service
See Commodity Credit Corporation

Animal and Plant Health Inspection Service
RULES
Plant-related quarantine, domestic:
Karnal bunt disease—
Compensation, 34109–34113
PROPOSED RULES
Exportation and importation of animals and animal products:
Recognition of animal disease status of regions in European Union, 34155–34168
Foreign quarantine notices:
Mexican Haas avocados, 34141–34144

Blind or Severely Disabled, Committee for Purchase From People Who Are
See Committee for Purchase From People Who Are Blind or Severely Disabled

Coast Guard
RULES
Ports and waterways safety:
Kill Van Kull Channel et al., NY and NJ; regulated navigation area
Correction, 34313

Commerce Department
See Foreign-Trade Zones Board
See International Trade Administration
See National Oceanic and Atmospheric Administration

Committee for Purchase From People Who Are Blind or Severely Disabled
NOTICES
Procurement list; additions and deletions, 34187–34188

Commodity Credit Corporation
PROPOSED RULES
Loan and purchase programs:
Wheat, feed grains, rice, and upland cotton; production flexibility contracts, 34154–34155

Council on Environmental Quality
NOTICES
World Trade Organization:
Forest products sector; tariff elimination; economic and environmental effects; comment request, 34304–34306

Defense Contract Audit Agency
NOTICES
Senior Executive Service:
Performance Review Boards; membership, 34225

Defense Department
See Defense Contract Audit Agency
NOTICES
Arms sales notification; transmittal letter, etc., 34218–34224
Meetings:
National Security Senior Advisory Board, 34224–34225

Education Department
PROPOSED RULES
Postsecondary education:
Secretary's recognition of accrediting agencies, 34465–34485
NOTICES
Grants and cooperative agreements; availability, etc.:
Even Start Statewide Family Literacy Initiative, 34225–34226

Employment and Training Administration
NOTICES
Grants and cooperative agreements; availability, etc.:
School-to-Work systems, 34271–34279

Employment Standards Administration
NOTICES
Minimum wages for Federal and federally-assisted construction; general wage determination decisions, 34280–34281

Energy Department
See Federal Energy Regulatory Commission
See Western Area Power Administration
NOTICES
Grants and cooperative agreements; availability, etc.:
Boxed waste form nondestructive assay development and demonstration project, 34226
Powerplant and industrial fuel use, new electric powerplant coal capability:
Self-certification filings—
ANP Blackstone Energy Co., 34226–34227

Environmental Protection Agency
RULES
Air pollution control; new motor vehicles and engines:
New nonroad spark-ignition nonhandheld engines at or below 19 kilowatts; phase 2 emission standards
Correction, 34313
Air programs:
Diesel fuel sulfur requirements; Alaska exemption petition, 34126–34133

Air quality implementation plans; approval and promulgation; various States:
California, 34126
Hazardous waste program authorizations:
Idaho, 34133–34137
PROPOSED RULES
Air programs:
Accidental release prevention—
Flammable hydrocarbon fuel exemption, 34179–34180
Air quality implementation plans; approval and promulgation; various States:
California, 34173–34179
Hazardous waste program authorizations:
Idaho, 34180
Superfund program:
National oil and hazardous substances contingency plan—
National priorities list update, 34180–34183
NOTICES
Environmental statements; availability, etc.:
Agency statements—
Weekly receipts, 34235–34236
Meetings:
Science Advisory Board, 34236–34237
Pesticide, food, and feed additive petitions:
Rohm & Haas Co., 34237–34243
Water pollution; discharge of pollutants (NPDES):
Texas; petroleum bulk stations and terminals; general permit, 34243–34253

Environmental Quality Council
See Council on Environmental Quality

Executive Office of the President
See Council on Environmental Quality
See Management and Budget Office
See Trade Representative, Office of United States

Federal Aviation Administration
PROPOSED RULES
Airworthiness directives:
Boeing, 34168–34170
Lockheed, 34170–34173
Commercial space transportation:
Launch site operation; licensing and safety requirements, 34315–34412

Federal Bureau of Investigation
NOTICES
Agency information collection activities:
Submission for OMB review; comment request, 34269

Federal Communications Commission
RULES
Common carrier services:
Truth-in-billing and billing format; common sense principles, 34487–34498
Wireline services offering advanced telecommunications capability; deployment
Correction, 34137–34138
PROPOSED RULES
Common carrier services:
Truth-in-billing and billing format; common sense principles, 34499–34501
NOTICES
Common carrier services:
Telecommunications numbering conservation measures; implementation, 34253–34254
Rulemaking proceedings; petitions filed, granted, denied, etc., 34254–34255

Federal Emergency Management Agency
NOTICES
Agency information collection activities:
Submission for OMB review; comment request, 34255–34256

Federal Energy Regulatory Commission
RULES
Electric utilities (Federal Power Act):
Open access same-time information system (OASIS), 34117–34125
NOTICES
Electric rate and corporate regulation filings:
Phelps Dodge Energy Services, LLC, et al., 34229–34233
Somerset Power LLC et al., 34233–34235
Applications, hearings, determinations, etc.:
California Independent System Operator Corp., 34227
Cleco Trading & Marketing LLC et al., 34227
Consolidated Edison Co. of New York, Inc., 34227–34228
Indeck-Olean L.P., 34228
Indiana Municipal Power Agency, 34228
Niagara Mohawk Power Corp. et al., 34228–34229

Federal Maritime Commission
PROPOSED RULES
Shipping Act of 1984; implementation:
Ocean common carriers; definition clarification, 34183–34184

Federal Reserve System
NOTICES
Banks and bank holding companies:
Change in bank control, 34256–34257
Formations, acquisitions, and mergers, 34257
Permissible nonbanking activities, 34257
Applications, hearings, determinations, etc.:
Fleet Financial Group, Inc., 34256

Fish and Wildlife Service
NOTICES
Endangered and threatened species:
Incidental take permits—
Washington State; Canada lynx and Puget Sound/Coastal bull trout, etc., 34216–34217

Food and Drug Administration
RULES
Food for human consumption:
Food labeling—
Apple cider food safety control; workshop, 34125–34126
NOTICES
Agency information collection activities:
Reporting and recordkeeping requirements, 34258
Food additive petitions:
California Day-Fresh Foods, Inc., 34258
Harmonisation International Conference; guidelines availability:
Chronic toxicity testing duration in animals (rodent and nonrodent), 34259–34260
Meetings:
Blood donor suitability; donor history of hepatitis; workshop, 34260–34261

Foreign-Trade Zones Board
NOTICES
Applications, hearings, determinations, etc.:
Missouri, 34188–34189
South Carolina
Borg-Warner Automotive Powertrain Systems Corp.; automotive transfer case manufacturing plant; correction, 34189
Texas
Dow Chemical Co.; petrochemical complex, 34189

Health and Human Services Department
See Food and Drug Administration
See National Institutes of Health
See Substance Abuse and Mental Health Services Administration
NOTICES
Grant and cooperative agreement awards:
Minority Access, Inc., 34257–34258

Housing and Urban Development Department
NOTICES
Grants and cooperative agreements; availability, etc.:
Facilities to assist homeless—
Excess and surplus Federal property, 34262–34263

Indian Affairs Bureau
PROPOSED RULES
Human services:
Financial assistance and social services programs, 34173
NOTICES
Environmental statements; availability, etc.:
Cabazon Resource Recovery Park, Cabazon Indian Reservation, CA, 34264
High Mesa Environmental Facility, Pueblo of Nambe, NM, 34264–34265

Interior Department
See Fish and Wildlife Service
See Indian Affairs Bureau
See Land Management Bureau
See Minerals Management Service

International Trade Administration
NOTICES
Antidumping:
Circular welded non-alloy steel pipe and tube from—
Mexico, 34190–34194
Cold-rolled flat-rolled carbon-quality steel products from—
Various countries, 34194–34204
Antidumping and countervailing duties:
Five-year (sunset) reviews—
Industrial phosphoric acid from Israel and Belgium; extension, 34189–34190
Countervailing duties:
Cold-rolled flat-rolled carbon-quality steel products from—
Various countries, 34204–34209
Live swine from—
Canada, 34209–34215

International Trade Commission
NOTICES
Meetings; Sunshine Act, 34268–34269

Justice Department
See Federal Bureau of Investigation
See Juvenile Justice and Delinquency Prevention Office
See National Institute of Corrections
See Parole Commission
See Prisons Bureau

Juvenile Justice and Delinquency Prevention Office
NOTICES
Grants and cooperative agreements; availability, etc.:
Life Skills Training Drug Prevention Program; training and technical assistance, 34503–34509

Labor Department
See Employment and Training Administration
See Employment Standards Administration
See Pension and Welfare Benefits Administration

Land Management Bureau
NOTICES
Environmental statements; availability, etc.:
ASARCO Inc.; Ray Mine and Hayden Complex, AZ; land exchange, 34265–34266
Owyhee Resource Area, ID, 34266–34267
Resource management plans, etc.:
El Malpais National Conservation Area et al., NM, 34267

Management and Budget Office
NOTICES
Budget rescissions and deferrals
Cumulative reports, 34299–34301

Minerals Management Service
NOTICES
Agency information collection activities:
Submission for OMB review; comment request, 34267–34268

National Archives and Records Administration
NOTICES
Agency records schedules; availability, 34297–34299

National Highway Traffic Safety Administration
NOTICES
Motor vehicle safety standards:
Nonconforming vehicles—
Importation eligibility; determinations, 34306–34309
Motor vehicle safety standards; exemption petitions, etc.:
General Motors Corp., 34309–34310

National Institute of Corrections
NOTICES
Grants and cooperative agreements; availability, etc.:
Staff sexual misconduct; training video development, 34269–34270

National Institutes of Health
NOTICES
Reports and guidance documents; availability, etc.:
Electric and magnetic fields research and public information dissemination program, 34261

National Oceanic and Atmospheric Administration
RULES
Fishery conservation and management:
Atlantic highly migratory species—
Bluefin tuna catch reporting, 34138–34139
Northeastern United States fisheries—
Atlantic mackerel, squid, and butterfish, 34139–34140

NOTICES
Agency information collection activities:
Proposed collection; comment request, 34215
Endangered and threatened species:
Incidental take permits—
Washington State; Canada lynx and Puget Sound/ Coastal bull trout, etc., 34216–34217
Marine mammals:
Incidental taking—
Italy as large-scale high seas driftnet nation, 34217–34218

Office of Management and Budget
See Management and Budget Office

Office of United States Trade Representative
See Trade Representative, Office of United States

Parole Commission
NOTICES
Meetings; Sunshine Act, 34270–34271

Pension and Welfare Benefits Administration
NOTICES
Employee benefit plans; prohibited transaction exemptions:
Chase Manhattan Bank et al., 34281–34293
First Security Corp. et al., 34293–34296
Meetings:
Employee Welfare and Pension Benefit Plans Advisory Council, 34296–34297

Personnel Management Office
NOTICES
Agency information collection activities:
Proposed collection; comment request, 34302
Submission for OMB review; comment request, 34302–34303

Prisons Bureau
NOTICES
Agency information collection activities:
Submission for OMB review; comment request, 34271

Public Health Service
See Food and Drug Administration
See National Institutes of Health
See Substance Abuse and Mental Health Services Administration

Securities and Exchange Commission
NOTICES
Agency information collection activities:
Submission for OMB review; comment request, 34303–34304

State Department
NOTICES
Munitions export licenses policy:
Nigeria, 34304

Substance Abuse and Mental Health Services Administration
NOTICES
Agency information collection activities:
Submission for OMB review; comment request, 34261–34262

Surface Transportation Board
PROPOSED RULES
Rail procedures:
Rail rate reasonableness, exemption and revocation proceedings; expedited procedures, 34185–34186
NOTICES
Railroad operation, acquisition, construction, etc.:
Delaware Transportation Group, Inc., 34310–34311
Diamond State Port Corp. et al., 34311–34312
Rock & Rail, Inc., 34312

Trade Representative, Office of United States
NOTICES
World Trade Organization:
Forest products sector; tariff elimination; economic and environmental effects; comment request, 34304–34306

Transportation Department
See Coast Guard
See Federal Aviation Administration
See National Highway Traffic Safety Administration
See Surface Transportation Board

Western Area Power Administration
NOTICES
Electric utility industry restructuring; impact on power allocation policies, 34433–34464
Energy Planning and Management Program Power Marketing Initiative:
Salt Lake City Area Integrated Projects, 34413–34417
Power marketing plans:
Sierra Nevada Region (2004), 34417–34433

Separate Parts In This Issue

Part II
Department of Transportation, Federal Aviation Administration, 34315–34412

Part III
Department of Energy, Western Area Power Administration, 34413–34464

Part IV
Department of Education, 34465–34485

Part V
Federal Communications Commission, 34487–34501

Part VI
Department of Justice, Juvenile Justice and Delinquency Prevention Office, 34503–34509

Reader Aids
Consult the Reader Aids section at the end of this issue for phone numbers, online resources, finding aids, reminders, and notice of recently enacted public laws.

CFR PARTS AFFECTED IN THIS ISSUE

A cumulative list of the parts affected this month can be found in the Reader Aids section at the end of this issue.

7 CFR
301.....34109
947.....34113
Proposed Rules:
319.....34141
920.....34144
1412.....34154

9 CFR
Proposed Rules:
92.....34155
94.....34155
98.....34155

14 CFR
Proposed Rules:
39 (2 documents) 34168, 34170
417.....34316
420.....34316

18 CFR
37.....34117

21 CFR
101.....34125

25 CFR
Proposed Rules:
20.....34173

33 CFR
165.....34313

34 CFR
Proposed Rules:
602.....34466

40 CFR
52.....34126
69.....34126
90.....34313
272.....34133
Proposed Rules:
52.....34173
68.....34179
272.....34180
300.....34180

46 CFR
Proposed Rules:
515.....34183
520.....34183
530.....34183
535.....34183

47 CFR
51.....34137
64.....34488
Proposed Rules:
64.....34499

49 CFR
Proposed Rules:
1121.....34185

50 CFR
285.....34138
635.....34138
648.....34139

Rules and Regulations

Federal Register
Vol. 64, No. 122
Friday, June 25, 1999

This section of the FEDERAL REGISTER contains regulatory documents having general applicability and legal effect, most of which are keyed to and codified in the Code of Federal Regulations, which is published under 50 titles pursuant to 44 U.S.C. 1510.

The Code of Federal Regulations is sold by the Superintendent of Documents. Prices of new books are listed in the first FEDERAL REGISTER issue of each week.

DEPARTMENT OF AGRICULTURE

Animal and Plant Health Inspection Service

7 CFR Part 301

[Docket No. 96–016–35]

RIN 0579–AA83

Karnal Bunt; Compensation for the 1997–1998 Crop Season

AGENCY: Animal and Plant Health Inspection Service, USDA.

ACTION: Final rule.

SUMMARY: We are amending the Karnal bunt regulations to provide compensation for certain growers, handlers, seed companies, owners of grain storage facilities, flour millers, and participants in the National Karnal Bunt Survey who incur losses and expenses because of Karnal bunt in the 1997–1998 crop season. The payment of compensation is necessary in order to reduce the economic impact of the Karnal bunt regulations on affected wheat growers and other individuals, and to help obtain cooperation from affected individuals in efforts to contain and reduce the prevalence of Karnal bunt.

EFFECTIVE DATE: June 25, 1999.

FOR FURTHER INFORMATION CONTACT: Mr. Mike Stefan, Operations Officer, Domestic and Emergency Operations, PPQ, APHIS, 4700 River Road Unit 134, Riverdale, MD 20737–1236; (301) 734–8247; or e-mail: michael.b.stefan@usda.gov.

SUPPLEMENTARY INFORMATION:

Background

Karnal bunt is a fungal disease of wheat (*Triticum aestivum*), durum wheat (*Triticum durum*), and triticale (*Triticum aestivum* X *Secale cereale*), a hybrid of wheat and rye. Karnal bunt is caused by the smut fungus *Tilletia indica* (Mitra) Mundkur and is spread by spores, primarily through the movement of infected seed. In the absence of measures taken by the Animal and Plant Health Inspection Service (APHIS), U.S. Department of Agriculture (USDA), to prevent its spread, the establishment of Karnal bunt in the United States could have significant consequences with regard to the export of wheat to international markets. The regulations regarding Karnal bunt are in 7 CFR 301.89–1 through 301.89–16 (referred to below as the regulations). Among other things, the regulations define areas regulated for Karnal bunt and restrict the movement of certain regulated articles, including wheat seed and grain, from the regulated areas.

On December 17, 1998, we published a proposed rule in the **Federal Register** (63 FR 69563–69569, Docket No. 96–016–31), to amend the regulations to provide compensation for certain growers, handlers, seed companies, owners of grain storage facilities, flour millers, and participants in the National Karnal Bunt Survey who incurred losses and expenses because of Karnal bunt in the 1997–1998 crop season. The compensation we proposed was the same as we provided in the 1996–1997 crop season.

For areas under the first crop season of regulation in 1997–1998, we proposed that growers, handlers, and seed companies would be eligible for a maximum of $1.80 per bushel of positive-testing wheat. For areas that were regulated in previous crop seasons, we proposed that growers, handlers, and seed companies would be eligible for $.60 per bushel of positive-testing wheat. For owners of grain storage facilities, we proposed to compensate for up to 50 percent of the direct cost of decontamination of a grain storage facility, but compensation would not exceed $20,000 per facility. For flour millers, we proposed to compensate for the treatment of millfeed at the rate of $35.00 per short ton of millfeed if APHIS required the millfeed to be treated. For National Karnal Bunt Survey participants, we proposed to compensate for positive-testing wheat at a maximum of $1.80 per bushel, and for up to 50 percent of the direct cost of decontamination of grain storage facilities, but not exceeding $20,000 per facility.

We solicited comments concerning our proposal for 60 days ending February 16, 1999. We received seven comments by that date. They were from wheat industry associations, wheat producers and handlers, State departments of agriculture, and a food manufacturer. All of the commenters recommended additions or revisions to the proposed compensation. The comments are discussed below by topic.

In the proposed rule, we said that all regulated areas in the 1997–1998 crop season were previously regulated areas, and would, therefore, be eligible for the $.60 per bushel compensation rate. Two commenters said that (1) the ''certification are'' established by APHIS in August 1998 is a ''first regulated crop season'' area and positive wheat from that area should get at least $1.80 per bushel compensation, and (2) the maximum $1.80 per bushel will not cover their losses, and we should offer the same maximum of $2.50 per bushel that we offered in the 1995–1996 crop season (the first year we regulated for Karnal bunt).

We are not making any changes to the proposed rule based on these comments. However, we agree with the commenters that wheat from the certification area that tested positive for Karnal bunt should be eligible for up to $1.80 per bushel compensation under the provisions for first regulated crop season areas. The certification area was established by APHIS as an emergency measure in August 1998 when random sampling of fields in Arizona showed there was a concentration of positive fields in a specific area. APHIS drew a boundary around the positive fields and called it a ''certification area.'' All of the certification area was within the regulated area in Arizona. Most of the fields within the certification area were classified as restricted areas for seed; the remaining fields were classified as surveillance areas. Under the regulations, wheat grain may move from restricted areas for seed without testing. Wheat grain from surveillance areas must be tested before movement from the area. When the certification area was established in August 1998, APHIS required all wheat grain that had not already moved out of the certification area to be tested for bunted kernels before movement from the area.

Wheat grain growers and handlers from the portion of the certification area

that was outside the surveillance areas did not expect restrictions on the movement of their wheat grain at the time they made their planting and contract decisions. It is consistent with the intent of the compensation regulations to consider the certification area outside of the surveillance areas to be under the first regulated crop season for 1997–1998. Therefore, growers, handlers, and seed companies who sold positive-testing wheat from the certification area outside of the surveillance areas will be eligible for up to $1.80 per bushel compensation. Positive-testing wheat grain from the surveillance areas within the certification area would be eligible for $.60 per bushel. This decision does not require any change to the proposed regulations.

One commenter said that $.60 per bushel is inadequate to compensate for losses from positive-testing breeder or foundation seed. Breeder and foundation seed are stages in the seed production process that come before the final stage of certified seed (certified seed is the seed sold for planting). The commenter said that seed companies lost future royalties from not being able to use positive-testing breeder or foundation seed as stock for producing large quantities of certified seed. The commenter also said that the contract price for foundation seed is normally $27.00 per bushel. The commenter asked us to offer higher compensation for breeder and foundation seed to cover these losses.

We are not making any changes to the proposed rule based on this comment. We have not compensated in the past for losses in future royalties or for other losses at the early stages of seed production. The loss in value of certified, market-ready seed is the most quantifiable and direct loss associated with actions taken by APHIS to prevent the spread of Karnal bunt. Many losses connected with seed in other stages of production are less quantifiable and may have been otherwise imposed by market forces, such as market demand and prices over the long term.

One commenter said that we should offer the same $1.80 per bushel compensation for all positive wheat, and not offer less ($.60 per bushel) for wheat from previously regulated areas. We are not making any changes based on this comment. We continue to believe it is appropriate to provide a lower level of compensation to growers, handlers, and seed companies from previously regulated areas. Growers, handlers, and seed companies in areas under the first regulated crop season would not have known that their area was to become regulated at the time they made their planting and many of their contracting decisions, and would not have been prepared for the loss in value of their wheat due to Karnal bunt. Growers, handlers, and seed companies in previously regulated areas knew they were in an area regulated for Karnal bunt at the time they made planting and contracting decisions for the 1997–1998 crop season. Understanding the restrictions, and realizing they were planting in a higher risk area, they could have chosen to alter their planting and contracting decisions to avoid losses from positive wheat. We believe the proposed compensation amounts are appropriate for the circumstances in each area.

Several commenters requested compensation for losses not addressed in the proposed rule, such as demurrage charges, the cost of cleaning contaminated railcars, and losses due to transportation delays caused by the Karnal bunt regulations. We are not making any changes to the proposed rule in response to these comments. We have not offered compensation for these costs and losses in past crop seasons. However, we have made a decision to provide some compensation for railcar cleaning and demurrage costs that were incurred in the 1995–1996 crop season due to the presence of Karnal bunt spores found in wheat in railcars. We are not offering compensation for railcar cleaning and demurrage costs for other crop seasons. Unlike handlers in later crop seasons, handlers in the 1995–1996 crop season would not have been prepared for potential costs associated with shipping wheat from the newly quarantined area. At the time of the 1995–1996 wheat harvest in Arizona, California, and New Mexico, the extent of Karnal bunt infestation was not completely known. In addition, even though samples were taken at the field level for testing, the testing did not reveal all the positive wheat in the affected area. The result was that significant quantities of positive wheat were commingled with negative wheat in railcars, and, when samples were taken from railcars for testing, high numbers of railcars with positive wheat were found. In subsequent crop seasons, the areas at higher risk for Karnal bunt were known, and handlers were able to take precautions to not commingle wheat from higher risk areas with wheat from other areas or to not move wheat from higher risk areas out of the regulated area.

During the 1995–1996 crop season, wheat in 22 railcars in California and 416 railcars in Arizona tested positive for Karnal bunt and the railcars were required to be cleaned, at an estimated cost of $50 per car. The time taken to remove the positive wheat from and clean the railcars often resulted in several days of demurrage charges, at a cost of about $50 per car per day (demurrage is charged by a railcar company to compensate for delays, such as if a handler fails to load or unload freight within the time allowed) . We estimate that the total cost of railcar cleaning and demurrage in the 1995–1996 crop season was $750,000. APHIS will contact all eligible claimants with information on how to submit claims.

The following comments did not address compensation and, therefore, are not within the scope of the proposed rule. Nevertheless, they are addressed below.

Two commenters said that Karnal bunt is not a dangerous plant pest, and asked that we work with trading partners to advocate international deregulation of Karnal bunt. We agree with the commenters that Karnal bunt is a minor crop pest in that it produces little direct economic loss to agricultural production. Research and information from USDA's Agricultural Research Service and international scientists support this view. However, international trading partners continue to consider Karnal bunt a quarantine issue, jeopardizing exports of U.S. wheat. Therefore, we continue to regulate the movement of wheat from areas affected by Karnal bunt to protect our export markets, although we are relieving restrictions on growers, handlers, and seed companies as appropriate.

We have taken steps to address international views on appropriate levels of protection against minor crop pests like Karnal bunt. In cooperation with the North American Plant Protection Organization (NAPPO), APHIS hosted an international symposium in 1997 to assess the importance of bunt and smut diseases of wheat for quarantine purposes. Following this symposium, at the request of NAPPO, the International Plant Protection Convention Secretariat convened a science panel in June 1998 to evaluate the issue of categorizing regulated pests that have minor biological impacts, like Karnal bunt, for the purpose of determining the appropriate strength of protective measures for these types of pests. The science panel concluded that it was unnecessary and inappropriate to create a specific category for pests that have minor biological impact and that countries should rely on the current pest risk analysis process (under the World Trade Organization ''Agreement

on the Application of Sanitary and Phytosanitary Measures'') as the basis for determining the strength of protective measures. We are continuing to work with our international trading partners to minimize the impact of Karnal bunt on wheat trade.

One commenter asked that we deregulate the Bard-Winterhaven area in California. One commenter asked that we address the issue of Mexico not accepting wheat from parts of California outside the regulated areas. We recently published a final rule that removes the Bard-Winterhaven area in Imperial County, CA, from the regulations (see Docket No. 96–016–36, 64 FR 23749–23754, published in the **Federal Register** on May 4, 1999). In regard to wheat exports to Mexico, we are working with the Government of Mexico to establish mutually recognized criteria for considering areas as free of Karnal bunt.

Therefore, for the reasons given in the proposed rule and in this document, we are adopting the proposed rule as a final rule, without change.

Effective Date

This is a substantive rule that provides compensation to persons who experienced economic losses in the 1997–1998 crop season because of the Karnal bunt regulations and emergency actions. Immediate action is necessary to compensate for these losses. Therefore, pursuant to the provisions of 5 U.S.C. 553, the Administrator of the Animal and Plant Health Inspection Service finds good cause for making this rule effective upon publication in the **Federal Register**.

Executive Order 12866 and Regulatory Flexibility Act

This rule has been reviewed under Executive Order 12866. The rule has been determined to be significant for the purposes of Executive Order 12866 and, therefore, has been reviewed by the Office of Management and Budget.

This final rule establishes compensation provisions for certain growers, handlers, seed companies, owners of grain storage facilities, flour millers, and participants in the National Karnal Bunt Survey to mitigate losses and expenses incurred in the 1997–1998 crop season because of the Karnal bunt regulations and emergency actions.

In accordance with Executive Order 12866, this analysis examines the economic costs and benefits of providing such compensation. The wheat industry within the regulated area is largely composed of businesses that can be considered ''small'' according to guidelines established by the Small Business Administration. Therefore, this analysis also fulfills the requirements of the Regulatory Flexibility Act (5 U.S.C. 601 *et seq.*), which require agencies to consider the economic effects of rules on small entities.

Upon detection of Karnal bunt in Arizona in March 1996, Federal quarantine and emergency actions were imposed to prevent the interstate spread of the disease to other wheat producing areas in the United States. The unexpected discovery of Karnal bunt and subsequent Federal emergency actions disrupted the production and marketing flows of wheat in the quarantined areas. We estimate that the impact of Karnal bunt and subsequent Federal actions on the wheat industry totaled $44 million in the 1995–1996 crop season.

In order to alleviate some of the economic hardships and to ensure full and effective compliance with the regulatory program, we offered compensation in the 1995–1996 and 1996–1997 crop seasons to mitigate certain losses to growers, handlers, seed companies, and other affected persons in the areas regulated for Karnal bunt. The payment of compensation is in recognition of the fact that, while benefits from regulation accrue to a large portion of the wheat industry outside the regulated areas, the regulatory burden falls predominately on a small segment of the affected wheat industry within the regulated areas. The compensation in this final rule for the 1997–1998 crop season is the same as the compensation offered in the 1996–1997 crop season.

Under this final rule, growers, handlers, and seed companies will be eligible for compensation for losses in the 1997–1998 crop season due to wheat grain or seed that tested positive for Karnal bunt. Only positive-testing wheat will be eligible for compensation because of the lack of restrictions on the movement of negative-testing wheat. As in the 1996–1997 crop season, we are offering different levels of compensation depending on whether the wheat was grown in an area under the first regulated crop season or in a previously regulated area. An area in the first regulated crop season is an area that became regulated for Karnal bunt after the 1997–1998 crop was planted. A previously regulated area is an area that became regulated for Karnal bunt before the 1997–1998 crop was planted.

For growers, handlers, and seed companies in previously regulated areas, compensation for positive grain or seed will be $.60 per bushel. Growers, handlers, and seed companies in areas under the first regulated crop season will be eligible for compensation at a rate not to exceed $1.80 per bushel. These compensation rates apply to both wheat grain and seed. The difference in compensation rates reflects the fact that affected entities in areas under the first regulated crop season would not have known that their area was to become regulated for Karnal bunt at the time that they made planting and contracting decisions, and would not have been prepared for the loss in value of their wheat due to Karnal bunt. Growers and handlers in previously regulated areas knew they were in an area regulated for Karnal bunt at the time that they made planting and contracting decisions for the 1997–1998 crop season. Given the restrictions, growers and handlers could have chosen to alter planting or contract decisions to avoid experiencing potential losses due to Karnal bunt.

We have completed testing of 1997–1998 harvest wheat from the surveillance areas in Arizona, California, New Mexico, and Texas. The amount of positive wheat from the surveillance areas is shown in the table below. The table also shows levels of positive wheat from an area called the certification area. The certification area was established by APHIS as an emergency measure in August of 1998 when random sampling of fields in Arizona showed there was a concentration of positive fields in a specific area. As discussed in the response to comments in this final rule, growers, handlers, and seed companies with positive wheat from the certification area (not including surveillance areas within the certification area) will be eligible for first regulated crop season compensation (maximum of $1.80 per bushel). We have not completed testing of wheat from the certification area outside of the surveillance areas. Therefore, the amounts shown in the table below are estimated based on the rate of infection we have found to date from the certification area. It should be noted that, in the proposed rule, we estimated that compensation for wheat grain and seed in the 1997–1998 crop season would total $87,000. The estimated total compensation in the table below is significantly higher due to a higher than expected infection rate and the higher rate of compensation for growers, handlers, and seed companies in the certification area.

COMPENSATION FOR POSITIVE-TESTING WHEAT IN THE 1997–1998 CROP SEASON

	Total bushels of wheat harvested	Positive wheat, bushels	Maximum compensation per bushel	Estimated total compensation
Arizona, surveillance area	1,577,858	284,042	$.60	$170,425
Arizona, certification area [1]	3,328,234	977,482 (estimated)	1.80	1,759,468
California	1,910,792	10,302	.60	6,181
New Mexico	318,000	0	.60	0
Texas	784,200	0	.60	0
Totals	7,919,084	1,271,826		1,936,074

[1] We estimate that the field infection rate in the Arizona certification area in 1998 was 6.45 percent. The amount of positive bushels in the Arizona certification area shown in this table does not reflect the field infection rate in this area. This is due to the fact that positive wheat was commingled with negative wheat in grain storage facilities in the certification area before it was known that the wheat was positive, resulting in a higher infection rate per bushel.

This final rule also provides compensation for the decontamination of grain storage facilities found with positive wheat, the treatment of millfeed, and participants in the National Karnal Bunt Survey whose wheat or grain storage facility is found to be positive for Karnal bunt.

Compensation for decontamination of grain storage facilities will be on a one-time-only basis for up to 50 percent of the cost of decontamination, not to exceed $20,000 per facility. In the 1997–1998 crop season, only one grain storage facility was required to be decontaminated.

Compensation for the cost of heat treating millfeed that APHIS requires to be treated is at the rate of $35.00 per short ton of millfeed. Under current regulations, APHIS requires heat treatment of millfeed made from wheat that tested positive for Karnal bunt. In the 1997–1998 crop season, no positive wheat was used for milling; therefore, no heat treatment of millfeed was required.

No new areas were regulated in the 1997–1998 crop season as a result of the National Karnal Bunt Survey. Therefore, no one will be eligible for compensation for National Karnal Bunt Survey participants under this final rule. (As discussed previously, although no new areas were regulated in the 1997–1998 crop season as a result of the National Karnal Bunt Survey, producers within the certification area in Arizona will be eligible for first regulated crop season compensation. The additional restrictions imposed in the certification area in the 1997–1998 crop season were not as a result of testing done for the National Karnal Bunt Survey.)

There are approximately 18,000 acres within the areas regulated for Karnal bunt where planting of wheat was prohibited in the 1997–1998 crop season. This rule does not contain provisions for compensating growers in areas where wheat planting is prohibited, since many of these growers rotate wheat with other crops that are not prohibited from being planted. These growers generate revenue from these other crops, effectively minimizing the impact of the prohibition on planting wheat.

Growers and handlers of wheat grain and seed, and wheat seed companies, are the entities most affected by this rule. We estimate that there are a total of 712 wheat growers in the regulated areas: 378 in Arizona, 48 in California, 200 in New Mexico, and 86 in Texas. There are 149 growers in surveillance areas, and 563 growers in regulated areas lying beyond surveillance areas.[1] Most of these entities have total sales of less than $0.5 million, the Small Business Administration's threshold for classifying wheat producers as small entities. Accordingly, the economic effects of this rule will largely be on small entities.

We expect this rule will have a positive economic effect on all affected entities, large and small. Compensation for the loss in value of wheat that tests positive for Karnal bunt serves to encourage compliance with testing requirements within the regulated area, thereby aiding in the preservation of an important wheat growing region in the United States. It also serves to encourage participation in the National Karnal Bunt Survey.

Under these circumstances, the Administrator of the Animal and Plant Health Inspection Service has determined that this action will not have a significant economic impact on a substantial number of small entities.

[1] The 149 growers in surveillance areas are distributed as follows: 54 in Arizona, 27 in California, 68 in Texas, and none in New Mexico. The 563 growers in regulated areas lying beyond surveillance areas are distributed as follows: 324 in Arizona, 21 in California, 200 in New Mexico, and 18 in Texas.

Executive Order 12372

This program/activity is listed in the Catalog of Federal Domestic Assistance under No. 10.025 and is subject to Executive Order 12372, which requires intergovernmental consultation with State and local officials. (See 7 CFR part 3015, subpart V.)

Executive Order 12988

This rule has been reviewed under Executive Order 12988, Civil Justice Reform. This rule: (1) Preempts all State and local laws and regulations that are inconsistent with this rule; (2) has no retroactive effect; and (3) does not require administrative proceedings before parties may file suit in court challenging this rule.

Paperwork Reduction Act

In accordance with section 3507(d) of the Paperwork Reduction Act of 1995 (44 U.S.C. 3501 *et seq.*), the information collection or recordkeeping requirements included in this final rule have been approved by the Office of Management and Budget (OMB). The assigned OMB control number is 0579–0140.

List of Subjects in 7 CFR Part 301

Agricultural commodities, Plant diseases and pests, Quarantine, Reporting and recordkeeping requirements, Transportation.

Accordingly, we are amending 7 CFR part 301 as follows:

PART 301—DOMESTIC QUARANTINE NOTICES

1. The authority citation for part 301 continues to read as follows:

Authority: 7 U.S.C. 147a, 150bb, 150dd, 150ee, 150ff, 161, 162, and 164–167; 7 CFR 2.22, 2.80, and 371.2(c).

2. Section 301.89–15 is amended by revising the section heading, the introductory text to the section, the

introductory text to paragraph (a), all of paragraph (b), the introductory text to paragraph (c), and the last sentence of paragraph (c)(2), to read as follows:

§ 301.89–15 Compensation for growers, handlers, and seed companies in the 1996–1997 and 1997–1998 crop seasons.

Growers, handlers, and seed companies are eligible to receive compensation from the United States Department of Agriculture (USDA) for the 1996–1997 and 1997–1998 crop seasons to mitigate losses or expenses incurred because of the Karnal bunt regulations and emergency actions, as follows:

(a) *Growers, handlers, and seed companies in areas under first regulated crop season.* Growers, handlers, and seed companies are eligible to receive compensation for the loss in value of their wheat in accordance with paragraphs (a)(1) and (a)(2) of this section if: the wheat was grown in a State where the Secretary has declared an extraordinary emergency; and, the wheat was grown in an area of that State that became regulated for Karnal bunt after the crop was planted, or for which an Emergency Action Notification (PPQ Form 523) was issued after the crop was planted; and, the wheat was grown in an area that remained regulated or under Emergency Action Notification at the time the wheat was sold. Growers, handlers, and seed companies in areas under the first regulated crop season are eligible for compensation for 1996–1997 crop season wheat or 1997–1998 crop season wheat (as appropriate) and for wheat inventories in their possession that were unsold at the time the area became regulated. The compensation provided in this section is for wheat grain, certified wheat seed, and wheat grown with the intention of producing certified wheat seed.

* * * * *

(b) *Growers, handlers, and seed companies in previously regulated areas.* Growers, handlers, and seed companies are eligible to receive compensation for the loss in value of their wheat in accordance with paragraphs (b)(1) and (b)(2) of this section if: the wheat was grown in a State where the Secretary has declared an extraordinary emergency; and, the wheat was grown in an area of that State that became regulated for Karnal bunt before the crop was planted, or for which an Emergency Action Notification (PPQ Form 523) was issued before the crop was planted; and, the wheat was grown in an area that remained regulated or under Emergency Action Notification at the time the wheat was sold. Growers, handlers, and seed companies in previously regulated areas are eligible for compensation only for 1996–1997 or 1997–1998 crop season wheat. The compensation provided in this section is for wheat grain, certified wheat seed, and wheat grown with the intention of producing certified wheat seed.

(1) *Growers.* Growers of wheat in a previously regulated area who sell wheat that was tested by APHIS and found positive for Karnal bunt prior to sale, or that was tested by APHIS and found positive for Karnal bunt after sale and the price received by the grower is contingent on the test results, are eligible to receive compensation at the rate of $.60 per bushel of positive testing wheat.

(2) *Handlers and seed companies.* Handlers and seed companies who sell wheat grown in a previously regulated area are eligible to receive compensation only if the wheat was not tested by APHIS prior to purchase by the handler, but was tested by APHIS and found positive for Karnal bunt after purchase by the handler or seed company, as long as the price to be paid by the handler or seed company is not contingent on the test results. Compensation will be at the rate of $.60 per bushel of positive testing wheat.

(c) *To claim compensation.* Compensation payments to growers, handlers, and seed companies under paragraphs (a) and (b) of this section will be issued by the Farm Service Agency (FSA). Claims for compensation for the 1996–1997 crop season must be received by FSA on or before October 8, 1998. Claims for compensation for the 1997–1998 crop season must be received by FSA on or before October 25, 1999. The Administrator may extend the deadline, upon request in specific cases, when unusual and unforeseen circumstances occur which prevent or hinder a claimant from requesting compensation on or before these dates. To claim compensation, a grower, handler, or seed company must complete and submit to the local FSA county office the following documents:

* * * * *

(2) *Growers.* * * * Growers compensated under paragraph (b)(1) of this section (previously regulated areas) whose wheat was not tested prior to sale must submit documentation showing that the price paid to the grower was contingent on test results (such as a copy of the receipt for the final sale of the wheat or a copy of the contract the grower has for the wheat, if this information appears on those documents).

* * * * *

§ 301.89–16 [Amended]

3. Section 301.89–16 is amended as follows:

a. In the heading, by removing the words ''1996–1997 crop season'' and adding the words ''1996–1997 and 1997–1998 crop seasons'' in their place.

b. In the introductory text, by removing the words ''1996–1997 crop season'' and adding the words ''1996–1997 and 1997–1998 crop seasons'' in their place.

c. In paragraphs (a), (b), (c)(1), and (c)(2), by removing the last two sentences in each paragraph and by adding three sentences in their place to read as follows: ''Claims for compensation for the 1996–1997 crop season must be received by APHIS on or before October 8, 1998. Claims for compensation for the 1997–1998 crop season must be received by APHIS on or before October 25, 1999. The Administrator may extend these deadlines upon written request in specific cases, when unusual and unforeseen circumstances occur which prevent or hinder a claimant from requesting compensation on or before these dates.''

Done in Washington, DC, this 18th day of June 1999.

Craig A. Reed,

Administrator, Animal and Plant Health Inspection Service.

[FR Doc. 99–16167 Filed 6–24–99; 8:45 am]

BILLING CODE 3410–34–P

DEPARTMENT OF AGRICULTURE

Agricultural Marketing Service

7 CFR Part 947

[Docket No. FV99–947–1 IFR]

Irish Potatoes Grown in Modoc and Siskiyou Counties, California, and in all Counties in Oregon, Except Malheur County; Temporary Suspension of Handling Regulations and Establishment of Reporting Requirements

AGENCY: Agricultural Marketing Service, USDA.

ACTION: Interim final rule with request for comments.

SUMMARY: This rule suspends, for the 1999–2000 season only, the minimum grade, size, quality, maturity, pack, inspection, and other related requirements currently prescribed under the Oregon-California potato marketing order. The marketing order regulates the handling of Irish potatoes grown in Modoc and Siskiyou Counties, California, and in all Counties in

Oregon, except Malheur County, and is administered locally by the Oregon-California Potato Committee (Committee). During this suspension of the handling regulations, reports from handlers will be required to obtain information necessary to administer the marketing order. This rule is expected to reduce industry expenses.

DATES: Effective July 1, 1999, through June 30, 2000; comments received by August 24, 1999 will be considered prior to issuance of a final rule.

ADDRESSES: Interested persons are invited to submit written comments concerning this rule. Comments must be sent to the Docket Clerk, Fruit and Vegetable Programs, AMS, USDA, Room 2525–S, P.O. Box 96456, Washington, DC 20090–6456; Fax: (202) 720–5698; or E-mail: moab.docketclerk@usda.gov. All comments should reference the docket number and the date and page number of this issue of the **Federal Register** and will be made available for public inspection in the Office of the Docket Clerk during regular business hours.

FOR FURTHER INFORMATION CONTACT: Teresa L. Hutchinson, Northwest Marketing Field Office, Marketing Order Administration Branch, Fruit and Vegetable Programs, AMS, USDA, 1220 SW Third Avenue, Room 369, Portland, Oregon 97204–2807; telephone: (503) 326–2724, Fax: (503) 326–7440 or George Kelhart, Technical Advisor, Marketing Order Administration Branch, Fruit and Vegetable Programs, AMS, USDA, Room 2525–S, P.O. Box 96456, Washington, DC 20090-6456; telephone: (202) 720–2491, Fax: (202) 720–5698. Small businesses may request information on complying with this regulation, or obtain a guide on complying with fruit, vegetable, and specialty crop marketing agreements and orders by contacting Jay Guerber, Marketing Order Administration Branch, Fruit and Vegetable Programs, AMS, USDA, P.O. Box 96456, Room 2525–S, Washington, DC 20090–6456; telephone (202) 720–2491, Fax: (202) 720–5698, or E-mail: Jay.Guerber@usda.gov. You may view the marketing agreement and order small business compliance guide at the following web site: http://www.ams.usda.gov/fv/moab.html.

SUPPLEMENTARY INFORMATION: This rule is issued under Marketing Agreement No. 114 and Marketing Order No. 947, both as amended (7 CFR part 947), regulating the handling of Irish potatoes grown in Modoc and Siskiyou Counties in California, and in all counties in Oregon, except Malheur County, hereinafter referred to as the ''order.'' The marketing agreement and order are effective under the Agricultural Marketing Agreement Act of 1937, as amended, (7 U.S.C. 601–674), hereinafter referred to as the ''Act.''

The Department of Agriculture (Department) is issuing this rule in conformance with Executive Order 12866.

This rule has been reviewed under Executive Order 12988, Civil Justice Reform. This rule is not intended to have retroactive effect. This rule will not preempt any State or local laws, regulations, or policies, unless they present an irreconcilable conflict with this rule.

The Act provides that administrative proceedings must be exhausted before parties may file suit in court. Under section 608c(15)(A) of the Act, any handler subject to an order may file with the Secretary a petition stating that the order, any provision of the order, or any obligation imposed in connection with the order is not in accordance with law and request a modification of the order or to be exempted therefrom. A handler is afforded the opportunity for a hearing on the petition. After the hearing the Secretary would rule on the petition. The Act provides that the district court of the United States in any district in which the handler is an inhabitant, or has his or her principal place of business, has jurisdiction to review the Secretary's ruling on the petition, provided an action is filed not later than 20 days after date of the entry of the ruling.

This rule suspends the handling and related regulations currently prescribed under the order from July 1, 1999, to June 30, 2000. This rule allows the Oregon-California potato industry to market potatoes without minimum grade, size, quality, maturity, pack, and inspection requirements. These regulations will resume July 1, 2000, for the 2000–2001 season and future seasons. This rule also establishes handler reporting requirements during the same time period. Reporting requirements will allow the Committee to obtain information from handlers necessary to administer the order.

Section 947.52 of the order authorizes the issuance of regulations for grade, size, quality, maturity, and pack for any variety of potatoes grown in the production area during any period. Section 947.51 authorizes the modification, suspension, or termination of regulations issued under § 947.52.

Section 947.60 provides that whenever potatoes are regulated pursuant to § 947.52, such potatoes must be inspected by the Federal-State Inspection Service, and certified as meeting the applicable requirements of such regulations. The cost of inspection and certification is borne by handlers.

Section 947.80 authorizes the Committee, with the approval of the Secretary, to require reports and other information from handlers that are necessary for the Committee to perform its duties.

Minimum grade, size, quality, maturity, and pack requirements for potatoes regulated under the order are specified in § 947.340 *Handling Regulation* [7 CFR 947.340]. This regulation, with modifications and exemptions for different varieties and types of shipments, provides that all potatoes grade at least U.S. No. 2; be at least 2 inches in diameter or weigh at least 4 ounces; and be not more than moderately skinned. Additionally, potatoes packed in cartons must be U.S. No. 1 grade or better, with an additional tolerance allowed for internal defects, or U.S. No. 2 grade weighing at least 10 ounces. Section 947.340 also includes waivers of inspection procedures, reporting and safeguard requirements for special purpose shipments, and a minimum quantity exemption of 19 hundredweight per day. Related provisions appear in the regulations at § 947.130, *Special Purpose Certificates—application and issuance*; § 947.132 *Reports*; § 947.133 *Denial and appeals*; and § 847.134 *Establishment of list of manufacturers of potato products*.

The Committee meets prior to and during each season to consider recommendations for modification, suspension, or termination of the regulatory requirements for Oregon-California potatoes which have been issued on a continuing basis. Committee meetings are open to the public and interested persons may express their views at these meetings. The Department reviews Committee recommendations and information submitted by the Committee and other available information, and determines whether modification, suspension, or termination of the regulatory requirements would tend to effectuate the declared policy of the Act.

At its February 23, 1999, meeting, the Committee unanimously recommended suspending the handling regulations and related sections and establishing handler reporting requirements for the 1999–2000 season. The Committee met again on May 14, 1999, to review the recommendation made at the earlier meeting. After extensive discussion, the Committee decided not to rescind or modify their earlier recommendation to suspend handling regulations and related sections. The Committee requested that this rule be effective at

the beginning of the next fiscal period, July 1, 1999, which is also the date shipments of the 1999 Oregon-California potato crop are expected to begin.

The objective of the handling and inspection requirements is to ensure that only acceptable quality potatoes enter fresh market channels, thereby ensuring consumer satisfaction, increasing sales, and improving returns to producers. While the industry continues to believe that quality is an important factor in maintaining sales, the Committee believes the cost of inspection and certification (mandated when minimum requirements are in effect) may exceed the benefits derived.

Potato prices have been at low levels in recent seasons, and many producers have faced difficulty covering their production costs. Therefore, the Committee has been discussing the possibility of reducing costs through the elimination of mandatory inspection. The Committee is concerned, however, that the elimination of current requirements could possibly result in lower quality potatoes being shipped to fresh markets. Also, there is some concern that the Oregon-California potato industry could lose sales to other potato producing areas that are covered by quality and inspection requirements. For these reasons, the Committee recommended that the suspension of the requirements be effective for the 1999–2000 season only. This will enable the Committee to study the impacts of the suspension and consider appropriate actions for ensuing seasons.

This rule will enable handlers to ship potatoes without regard to the minimum grade, size, quality, maturity, pack, and inspection requirements for the 1999–2000 season only. This rule will allow handlers to decrease costs by eliminating the costs associated with inspection. This rule will not restrict handlers from seeking inspection on a voluntary basis. The Committee will evaluate the effects of removing the minimum requirements on marketing and on producer returns at its meeting next spring.

The suspension action also will result in the elimination of the monthly inspection report from the Federal-State Inspection Service which the Committee used as a basis for the collection of assessments from handlers. This inspection report was compiled by the Federal-State Inspection Service from inspection certificates. During the suspension of the regulations, reports from handlers will be needed for the Committee to obtain information on which to collect assessments. Therefore, a new § 947.180 *Reports* is established which requires each handler to submit a monthly assessment report to the Committee containing the following information: (a) The date and quantity of fresh potatoes sold including identification numbers; (b) the name and address of the producers; (c) the assessment payment due; and (d) the name and address of the handler. Authorization to assess handlers enables the Committee to incur expenses that are reasonable and necessary to administer the program. Although adding reporting requirements, this rule through the elimination of inspection and certification and other related requirements is expected to reduce industry expenses.

Consistent with the suspension of § 947.340, this rule also suspends §§ 947.120, 947.123, 947.130, 947.132, 947.133, and 947.134 of the rules and regulations in effect under the order. Sections 947.120 and 947.123 provide authority for hardship exemptions from inspection and certification, and establish reporting and recordkeeping requirements when such exemptions are in place. Sections 947.130, 947.132, 947.133, and 947.134 are safeguard and reporting provisions of the order that are applicable to special purpose shipments when inspection and certification requirements are in place.

Contained within § 947.340(i) of the current handling regulations is a minimum quantity exemption under which a handler may ship not more than 19 hundredweight of potatoes on any day without regard to the inspection and assessment requirements issued under the order. The suspension of the handling regulations removes all inspection requirements. To continue the current minimum quantity exemption for assessments, a new § 947.125 *Minimum quantity exemption* is established. This section simply continues the current minimum quantity exemption under which a handler may ship not more than 19 hundredweight of potatoes on any day without regard to the assessment requirements issued under the order.

Pursuant to requirements set forth in the Regulatory Flexibility Act (RFA), the Agricultural Marketing Service (AMS) has considered the economic impact of this action on small entities. Accordingly, AMS has prepared this initial regulatory flexibility analysis.

The purpose of the RFA is to fit regulatory actions to the scale of business subject to such actions in order that small businesses will not be unduly or disproportionately burdened. Marketing orders issued pursuant to the Act, and the rules issued thereunder, are unique in that they are brought about through group action of essentially small entities acting on their own behalf. Thus, both statutes have small entity orientation and compatibility.

There are approximately 30 handlers of Oregon-California potatoes who are subject to regulation under the marketing order and approximately 450 potato producers in the regulated area. Small agricultural service firms have been defined by the Small Business Administration (13 CFR 121.601) as those having annual receipts of less than $5,000,000, and small agricultural producers are defined as those having annual receipts of less than $500,000.

Currently, about 83 percent of the Oregon-California potato handlers ship less that $5,000,000 worth of potatoes and 17 percent ship more than $5,000,000 worth on an annual basis. In addition, based on acreage, production, and producer prices reported by the National Agricultural Statistics Service, and the total number of Oregon-California potato producers, average annual producer receipts are approximately $285,000. In view of the foregoing, it can be concluded that the majority of handlers and producers of Oregon-California potatoes may be classified as small entities.

This rule suspends the handling and related regulations and establishes reporting requirements from July 1, 1999, through June 30, 2000. This rule will allow the Oregon-California potato industry to market potatoes without minimum grade, size, quality, maturity, pack, and inspection requirements. The handling regulations currently specified in § 947.340 and in other related sections will resume July 1, 2000, for the 2000–2001 season and future seasons. New reporting requirements will allow the Committee to obtain information from handlers necessary to collect assessments during the period of suspension.

At its February 23, 1999, meeting, the Committee unanimously recommended suspending the handling and related regulations and establishing reporting requirements for the 1999–2000 season. The Committee met again on May 14, 1999, to review the recommendation made at the earlier meeting. After extensive discussion, the Committee decided not to rescind or modify their earlier recommendation to suspend the regulations. The Committee requested that this rule be effective at the beginning of the next fiscal period, July 1, 1999, which is also the date shipments of the 1999 Oregon-California potato crop are expected to begin.

The objective of the handling requirements is to ensure that only acceptable quality potatoes enter fresh market channels, thereby ensuring

consumer satisfaction, increasing sales, and improving returns to producers. While the industry continues to believe that quality is an important factor in maintaining sales, the Committee believes the cost of inspection and certification (mandated when minimum requirements are in effect) may exceed the benefits derived.

Potato prices have been at low levels in recent seasons, and many producers have faced difficulty covering their production costs. Therefore, the Committee has been discussing the possibility of reducing costs through the elimination of mandatory inspection. The Committee is concerned, however, that the elimination of current requirements could possibly result in lower quality potatoes being shipped to fresh markets. Also, there is some concern that the Oregon-California potato industry could lose sales to other potato producing areas that are covered by quality and inspection requirements. For these reasons, the Committee recommended that the suspension of the requirements be effective for the 1999–2000 season only. This will enable the Committee to study the impacts of the suspension and consider appropriate actions for ensuing seasons.

This rule will enable handlers to ship potatoes without regard to the minimum grade, size, quality, maturity, pack, inspection, and related requirements for the 1999–2000 season only. This rule will allow handlers to decrease costs by eliminating the costs associated with inspection. This rule will not restrict handlers from seeking inspection on a voluntary basis. The Committee will evaluate the effects of removing the minimum requirements on marketing and on producer returns at its meeting next spring.

The suspension action also will result in the elimination of the monthly inspection report from the Federal-State Inspection Service which the Committee used for billing purposes. This inspection report was compiled by the Federal-State Inspection Service from inspection certificates. During this suspension of the regulations, reports from handlers will be necessary for the Committee to obtain information on which to collect assessments. This rule establishes a new § 947.180 *Reports* which requires each handler to submit a monthly assessment report to the Committee containing the following information: (a) The date and quantity of fresh potatoes sold including identification numbers; (b) the name and address of the producers; (c) the assessment payment due; and (d) the name and address of the handler. Authorization to assess handlers enables the Committee to incur expenses that are reasonable and necessary to administer the program. Although adding reporting requirements, this rule through the elimination of inspection and certification and other related requirements is expected to reduce industry expenses.

Contained within § 947.340(i) of the current handling regulations is a minimum quantity exemption under which a handler may ship not more than 19 hundredweight of potatoes on any day without regard to the inspection and assessment requirements issued under the order. The suspension of the handling regulations removes all inspection requirements. To continue the current minimum quantity exemption for assessments, a new § 947.125 *Minimum quantity exemption* is established. This section simply continues the current minimum quantity exemption under which a handler may ship not more than 19 hundredweight of potatoes on any day without regard to the assessment requirements issued under the order.

The Committee anticipates that this rule will not negatively impact small businesses. This rule will suspend minimum grade, size, quality, maturity, pack, and inspection requirements. Further, this rule will allow handlers and producers the choice to obtain inspection for potatoes, as needed, thereby reducing costs for producers and handlers. The total cost of inspection and certification for fresh shipments of Oregon-California potatoes during the 1998–99 marketing season is estimated at $600,000. This is approximately $20,000 per handler. The Committee expects, however, that most handlers will continue to have some of their potatoes inspected and certified by the Federal-State Inspection Service.

The Committee investigated the use of other types of inspection programs as another option to reduce the cost of inspection, but believed they were not viable at this time. With the suspension of handling regulations, there are no alternatives to reporting requirements to ensure the collection of assessments needed to administer the order.

This rule will require monthly reports from handlers to obtain information necessary to collect assessments. Although this rule establishes new reporting requirements, the suspension of the handling regulations eliminates the more frequent reporting requirements that were included under the safeguard provisions of the order.

Therefore, any additional reporting or recordkeeping requirements on either small or large potato handlers are expected to be offset by the elimination of reporting requirements currently in effect. In addition, the elimination of inspection and certification requirements is expected to further reduce industry expenses. Finally, as with all Federal marketing order programs, reports and forms are periodically reviewed to reduce information requirements and duplication by industry and public sectors.

In accordance with the Paperwork Reduction Act of 1995 (44 U.S.C. Chapter 35), the information collection requirements that are contained in this rule have been approved by the Office of Management and Budget (OMB) and have been assigned OMB No. 0581–0178. It is estimated that it will take a handler 20 minutes to complete a monthly assessment report, and that each handler will fill out 12 monthly assessment reports each year. This creates an estimated total industry burden of approximately 120 hours. It is estimated that it currently takes a handler 5 minutes to complete a safeguard reporting form. With an estimated 2,000 safeguard reports completed each year, the estimated decrease in burden because of the suspension of safeguard reporting requirements is estimated to be 167 hours. Five other miscellaneous forms are also being suspended. With an estimated 31 responses each year, the estimated decrease in burden because of the suspension of these forms is estimated to be 6.5 hours.

The Department has not identified any relevant Federal rules that duplicate, overlap or conflict with this rule. Further, the Committee's meetings were widely publicized throughout the Oregon-California potato industry and all interested persons were invited to attend the meetings and participate in Committee deliberations. Like all Committee meetings, the February 23, 1999, and May 14, 1999, meetings were public meetings and all entities, both large and small, were able to express their views on this issue. The Committee itself is composed of 14 members, of which 5 are handlers and 9 are producers. Finally, interested persons are invited to submit information on the regulatory and informational impacts of this action on small businesses.

After consideration of all relevant material presented, including the Committee's recommendation, and other information, it is found that (1) The regulations suspended by this action for a specified period no longer tend to effectuate the declared policy of the Act and (2) the addition of new regulations, as hereinafter set forth, will

tend to effectuate the declared policy of the Act.

This rule invites comments on suspension of the handling regulations and establishment of reporting requirements under the Oregon-California potato marketing order. Any comments received will be considered prior to finalization of this rule.

Pursuant to 5 U.S.C. 553, it is also found and determined upon good cause that it is impracticable, unnecessary, and contrary to the public interest to give preliminary notice prior to putting this rule into effect and that good cause exists for not postponing the effective date of this rule until 30 days after publication in the **Federal Register** because: (1) This rule suspends the current handling and related regulations and establishes reporting requirements for Oregon-California potatoes for the 1999–2000 marketing year which begins July 1, 1999; (2) this rule was unanimously recommended by the Committee at open public meetings and all interested persons had an opportunity to express their views and provide input; (3) Oregon-California potato handlers are aware of this rule and need no additional time to comply with the relaxed requirements; (4) this rule should be in effect by July 1, 1999, the date 1999–2000 season shipments of the Oregon-California potato crop are expected to begin, and this action should apply to the entire season's shipments; and (5) this rule provides a 60-day comment period, and any comments received will be considered prior to finalization of this rule.

List of Subjects in 7 CFR Part 947

Marketing agreements, Potatoes, Reporting and recordkeeping requirements.

For the reasons set forth in the preamble, 7 CFR Part 947 is amended as follows:

PART 947—IRISH POTATOES GROWN IN MODOC AND SISKIYOU COUNTIES, CALIFORNIA, AND IN ALL COUNTIES IN OREGON, EXCEPT MALHEUR COUNTY

1. The authority citation for 7 CFR Part 947 continues to read as follows:

Authority: 7 U.S.C. 601–674.

2. In Part 947, §§ 947.120, 947.123, 947.130, 947.132, 947.133, 947.134 and 947.340 are suspended in their entirety effective July 1, 1999, through June 30, 2000.

3. In Subpart—Rules and Regulations, under the undesignated center heading ''Exemptions'', a new § 947.125 is added, and a new undesignated center heading and §194.180 are added to read as follows:

§ 947.125 Minimum quantity exemption.

From July 1, 1999, through June 30, 2000, any person may handle not more than 19 hundredweight of potatoes on any day without regard to the assessment requirements of § 947.41 of this part. This exemption shall not apply to any part of a shipment which exceeds 19 hundredweight.

Reports

§ 947.180 Reports.

From July 1, 1999, through June 30, 2000, each person handling potatoes shall submit a Monthly Assessment Report to the Committee containing the following information:

(a) The date and quantity of fresh potatoes sold including identification numbers;

(b) the name and address of the producers;

(c) the assessment payment due; and

(d) the name and address of such handler.

Dated: June 18, 1999.

Robert C. Keeney,

Deputy Administrator, Fruit and Vegetable Programs.

[FR Doc. 99–16056 Filed 6–24–99; 8:45 am]

BILLING CODE 3410–02–P

DEPARTMENT OF ENERGY

Federal Energy Regulatory Commission

18 CFR Part 37

[Docket No. RM98–3–000; Order No. 605]

Open Access Same-Time Information System

Issued May 27, 1999.

AGENCY: Federal Energy Regulatory Commission.

ACTION: Final rule.

SUMMARY: The Federal Energy Regulatory Commission (Commission) is amending its regulations to: Extend the retention period and availability of information on curtailments and interruptions; allow the Commission staff and the public to access the supporting information on curtailments and interruptions, upon request; codify that OASIS users are allowed to make file transfers and queries as defined in the Standards and Communications Protocols (S&CP) Document; clarify that Responsible Parties are required to provide access to their OASIS sites for OASIS users making automated queries for extensive amounts of data; add a provision to allow Responsible Parties, under certain circumstances, to limit a user's access to an OASIS node; and add a provision to require OASIS users to notify Responsible Parties one month in advance of initiating a significant amount, or significantly increasing the use, of automated queries. The Commission believes that additional information about the state of the transmission system will enable customers to make better decisions about the quality of the transmission service they intend to purchase.

EFFECTIVE DATE: This final rule is effective on July 26, 1999.

FOR FURTHER INFORMATION CONTACT:

Marvin Rosenberg (Technical Information), Office of Economic Policy, Federal Energy Regulatory Commission, 888 First Street, NE., Washington, D.C. 20426, (202) 208–1283

Paul Robb (Technical Information), Office of Electric Power Regulation, Federal Energy Regulatory Commission, 888 First Street, NE., Washington, D.C. 20426, (202) 219–2702

Andrea Weinstein (Legal Information), Office of the General Counsel, Federal Energy Regulatory Commission, 888 First Street, NE., Washington, D.C. 20426, (202) 208–1017

SUPPLEMENTARY INFORMATION: In addition to publishing the full text of this document in the **Federal Register**, the Commission also provides all interested persons an opportunity to inspect or copy the contents of this document during normal business hours in the Public Reference Room at 888 First Street, N.E., Room 2A, Washington, D.C. 20426.

The Commission Issuance Posting System (CIPS) provides access to the texts of formal documents issued by the Commission from November 14, 1994, to the present. CIPS can be accessed via Internet through FERC's Home page (http://www.ferc.fed.us) using the CIPS Link or the Energy Information Online icon. Documents will be available on CIPS in ASCII and WordPerfect 6.1. User assistance is available at 202–208–2474 or by E-mail to cipsmaster@ferc.fed.us.

This document is also available through the Commission's Records and Information Management System (RIMS), an electronic storage and retrieval system of documents submitted to and issued by the Commission after November 16, 1981. Documents from November 1995 to the present can be viewed and printed. RIMS is available in the Public Reference Room or

remotely via Internet through FERC's Home page using the RIMS link or the Energy Information Online icon. User assistance is available at 202–208–2222, or by E-mail to rimsmaster@ferc.fed.us.

Finally, the complete text on diskette in WordPerfect format may be purchased from the Commission's copy contractor, RVJ International, Inc. RVJ International, Inc. is located in the Public Reference Room at 888 First Street, N.E., Washington, D.C. 20426.

Before Commissioners: James J. Hoecker, Chairman; Vicky A. Bailey, William L. Massey, Linda Breathitt, and Curt Hébert, Jr.

Background

This proceeding began with the issuance of a Notice of Proposed Rulemaking (NOPR) on July 29, 1998.[1] The NOPR addressed three main Open Access Same-Time Information System (OASIS)[2] issues: (1) The retention period and availability of information about curtailments and interruptions; (2) the ability of OASIS users to make file transfers and automated computer-to-computer file transfers and queries; and (3) limiting a user's access to an OASIS node.

We invited comments on enumerated issues, along with general comments. Comments were filed by 16 commenters. These comments were generally favorable to the proposed changes, although numerous disagreements remained as to the details. The comments will be discussed below on an issue-by-issue basis.[3]

This final rule is being issued after a review of the comments filed in response to the Commission's NOPR issued in this proceeding on July 29, 1998. The final rule becomes effective on July 26, 1999.

Discussion

In this final rule, we are making revisions to 18 CFR Part 37. These revisions include: (1) Amending the retention period for supporting information about curtailments and interruptions in § 37.6(e)(3)(ii); (2) amending § 37.6(e)(3)(ii) to allow the Commission staff and the public access to the supporting information on curtailments and interruptions, upon request; (3) amending § 37.6(a)(6) to allow OASIS users to make file transfers and queries as defined in the S&CP Document; (4) adding § 37.5(c) to require Responsible Parties to provide access to their OASIS sites for OASIS users making automated queries for extensive amounts of data; (5) adding § 37.5(d) and § 37.5(e) to allow Responsible Parties, under certain circumstances, to limit a user's access to an OASIS node; and (6) adding § 37.8(a) to require OASIS users to notify Responsible Parties one month in advance of initiating a significant amount, or significantly increasing the use, of automated queries.

A. Access to, and Retention of Supporting Information on Curtailments and Interruptions

1. Retention Period

The first issue is whether to extend the retention period of supporting information on curtailments and interruptions. Currently, our regulations at 18 CFR 37.6(e)(ii) require that Transmission Providers make available supporting information about curtailments and interruptions for 60 days after the occurrence of the curtailment or interruption, upon request by the affected customer. Our regulations at § 37.6(e)(i) require that a Transmission Provider post notice of the curtailment or interruption on the OASIS and state why the transaction could not be continued or completed. Furthermore, § 37.6(e)(ii) required that information to support the curtailment and the operating status of the facilities involved in the constraint must be maintained.

In the NOPR, we noted that issues concerning curtailments and interruptions have been the subject of a number of informal complaints to the FERC Enforcement Hotline. Accordingly, we proposed to revise our regulations to require that Transmission Providers retain supporting information about curtailments and interruptions for three years.

Comments

A number of commenters supported the Commission's proposal to require Transmission Providers to retain the supporting information about curtailments and interruptions for three years. Numerous commenters believe that several aspects of the Commission's proposal need clarification.

The How Group[4] recognizes that supporting data can be voluminous and it recommends the following clarification: OASIS systems are still required to provide curtailment information on-line in the current templates for ninety (90) days [18 CFR 37.6(e)(3)(i)], and supporting information must be retained off-line for three years.[5] The How Group notes that their recommendation is consistent with the retention requirements for audit data. Cal ISO, MAIN and Southwest support the How Group's proposal.[6]

Cinergy is unclear as to where the information needs to be maintained. Cinergy requests that, if storage of the supporting information is to be off-line, then the Commission should require the Transmission Providers to provide near-term curtailment and interruption data on-line for at least 120 days.[7]

EPSA supports the Commission's proposal to amend its regulations to require that Transmission Providers retain supporting information about curtailments and interruptions for three years. EPSA, however, argues that three years may be insufficient in some circumstances. EPSA argues that Transmission Providers should be required to maintain the supporting data for so long as necessary if such data relates to a complaint pending before the Commission, or otherwise is needed to resolve issues in an ongoing proceeding.[8]

CSW and VEPCO argue that a three-year retention period is too long and that Transmission Providers would be transformed into archivists.[9] CSW asserts that a one-year retention period is a more cost-effective approach. VEPCO recommends that the Commission keep the 60-day retention requirement. However, VEPCO notes that at a maximum, requiring retention for one year might be useful in

[1] Open Access Same-Time Information System, Notice of Proposed Rulemaking, FERC Stats. & Regs. ¶ 32,531 (1998); 63 FR 42296, August 7, 1998.

[2] Open Access Same-Time Information System (Formerly Real-Time Information Networks) and Standards of Conduct, Order No. 889, FERC Stats. & Regs. ¶ 31,035 (1996), *order on reh'g*, Order No. 889–A, FERC Stats. & Regs. ¶ 31,049 (1997), *order on reh'g*, Order No. 889–B, 81 FERC ¶ 61,253 (1997).

[3] In the discussion that follows, our references to comments are illustrative and not exhaustive. While we have identified all of the major issues raised by the commenters, we have not attempted to identify all commenters in instances where more than one comment makes the same point.

[4] During a technical conference held by the Commission's staff in July 1995, a consensus developed that two industry groups should be formed, one dealing with ''what'' information should be posted on the network and the other dealing with ''how'' to design the OASIS. The ''what'' group would be facilitated by the North American Electric Reliability Council (NERC) and the ''how'' group would be facilitated by the Electric Power Research Institute. *See* Real-Time Information Networks, Notice of Timetable and Opportunity for Participation in Industry Working Groups, FERC Stats. & Regs. ¶ 35,029 (1995).

[5] How Group comments at 2.

[6] A list of Commenters' full names and corresponding abbreviations is contained in Attachment 1.

[7] *See* Cinergy comments at 2.

[8] EPSA comments at 4.

[9] *See* CSW comments at 2; VEPCO comments at 5–6.

comparing curtailments and interruptions on a seasonal basis.

Commission Conclusion

After considering the comments, we continue to believe that three years is an appropriate period for maintaining supporting information about curtailments and interruptions. As the How Group notes, the proposed three-year retention period for supporting curtailment and interruption data is consistent with the retention period for audit data.[10] Therefore, we will modify the regulations at 18 CFR 37.6(e)(3)(ii) to require that the information to support a curtailment or interruption must be retained off-line for three years. In our judgment, a three-year retention period is useful in comparing curtailments and interruptions over time.

In response to EPSA, we note that under the Federal Power Act, public utilities have record-keeping and reporting obligations and are subject to the Commission's investigation and enforcement powers.[11] These requirements provide safeguards for the handling of documents during pending cases. In any event, we see no need at this time to adopt regulations specifically on retention of information relevant to pending proceedings on curtailments or interruptions.

2. Access to and Availability of Supporting Information

Currently, our regulations at § 37.6(e)(3)(ii) give access to the supporting curtailment and interruption information to affected customers, upon request. In the NOPR, we expressed concern that the regulations did not allow the Commission staff and the public access to the supporting information. We noted that lack of access to the supporting information limits the Commission's ability to audit the circumstances under which a curtailment or interruption occurs, as well as the Commission's ability to identify compliance problems and resolve complaints. Therefore, we proposed to make the supporting information about curtailments and interruptions available on request, not only to affected customers, but also to the Commission staff and the public.

Comments

EPMI strongly supports the Commission's proposal to require Transmission Providers to make the supporting information relating to curtailments and interruptions available to affected customers, the Commission Staff and the public. Due to the commercial sensitivity of the supporting curtailment and interruption information, however, EPMI proposes that the information not be made available for at least 30 days after the end of the month in which the curtailment or interruption was imposed.

EEI recommends that access to information on curtailments and interruptions should only be available to Transmission Customers. EEI argues that there are serious risks to the reliability of the interconnected transmission system that could result from disclosure to the general public. EEI recommends that the Commission modify § 37.6(e)(3)(ii) to provide the information to ''any other transmission customer who: (i) Demonstrates a legitimate basis for requesting the information and (ii) agrees to keep the information on curtailment or interruptions confidential, provided that the information may be disclosed to the Commission pursuant to 18 CFR 388.112.'' [12] VEPCO recommends the same modifications to this section of our regulations.

Commission Conclusion

First, disclosure of supporting curtailment and interruption data to the Commission will provide useful information for discerning patterns of undue discrimination. With access to the additional information, the Commission will have a greater ability to examine the circumstances under which a curtailment or interruption occurred. This in turn, will lead to early identification of compliance problems and faster resolution of complaints. Accordingly, we will revise § 37.6(3)(ii) to include the Commission staff.

Second, commenters raised two types of arguments concerning the Commission's proposal to allow the public access to the supporting information on curtailments and interruptions, upon request: (1) Commercial sensitivity; and (2) reliability of the transmission system.

We have given careful consideration to the possible harmful commercial effects of disclosing supporting curtailment and interruption information to the public. We believe that the disclosure of this information to the public will provide useful information to the public for discerning any patterns of undue discrimination in the rendering of transmission services. Thus, disclosure to the public should promote non-discrimination and lead to better competitive utilization of transmission systems.

The Commission considers the reliability of the interconnected transmission system to be of utmost importance. NERC and the industry have made significant efforts to ensure that reliability of the transmission system is maintained and that reliability criteria are compatible with competitive markets.[13] NERC and its member Regional Reliability Councils have worked cooperatively and effectively to provide reliability standards for public utilities. Furthermore, these entities have not cited any risks to reliability from disclosure of this information. Currently, Transmission Providers already post curtailment-related information on the OASIS including the Available Transmission Capacity for a constrained path. Also, section 213(b) of the Federal Power Act requires transmitting utilities to make annual filings informing the ''public of potentially available transmission capacity and known constraints.'' [14] However, we are taking the precaution of requesting the Market Interface Committee (MIC) [15] to review and specify the supporting information about curtailments and interruptions that should be maintained.[16] In these circumstances, the Commission believes that the disclosure of information on curtailments and interruptions to the public is appropriate at this time.

3. Additional Information on the Congested Path

In the NOPR, we proposed that the information under 18 CFR 37.6(e)(3)(ii) should include information on any other uses of the congested path at the time of the curtailment or interruption. We noted that it would be helpful to know whether the curtailment or interruption was imposed on other

[10] *See* 18 CFR 37.7 (1998).

[11] *See* Federal Power Act, Section 301 (making and preservation of accounts, records, and memoranda; Commission's right to inspect and examine); Section 304 (periodic and special reports; obstruction of the making or keeping of required information unlawful); Section 307 (investigations) and Section 314 (enforcement). These Sections are codified at 16 U.S.C. 825, 825c, 825f and 825m.

[12] EEI comments at 3–4.

[13] *See* Order No. 888–A, FERC Stats. & Regs. ¶ 31,048 at 30,185 (1997).

[14] 16 U.S.C. 8241 (1994).

[15] The Commercial Practices Working Group (CPWG) was an independent industry-initiated and managed group committed to providing an open forum dedicated to the development and consensus-based business practices in support of reliable and competitive bulk electricity markets. CPWG's membership included members from various segments of the wholesale electric industry, including Transmission Providers and Customers. Recently, the CPWG has been reconstituted and its functions taken over by a replacement group, the MIC, sponsored by NERC.

[16] *See infra* section 3.

users. Furthermore, information on any other uses of the congested path at the time of the curtailment or interruption would not be burdensome to assemble.

Comments

Many commenters supported the Commission's proposal to include additional information on other uses of the congested path at the time of curtailment or interruption. Many commenters argued that the supporting information must be clearly defined and consistent across all nodes.

Cinergy asserts that it is not always possible for Transmission Providers to know all of the uses of a given path due to the dynamic nature of the power system.[17] Cinergy recommends that the Commission clarify that the information furnished for congested paths be scheduled uses only.

Dynegy states that OASIS operators should be required to provide information with respect to the depth of transmission loading relief (TLR) cuts, *i.e.,* whether transactions are being cut hourly or daily, as well as the number of transactions and the total amount in megawatts of each curtailment.[18]

EPMI proposes that the Commission require hourly load data and generation output levels. EPMI further proposes that the names of impacted parties to the curtailment and the magnitude of the curtailment should be disclosed.[19]

PECO submits that each Transmission Provider's OASIS site should identify, for each incident for which transmission TLR procedures are invoked, resulting in a halting or curtailment: (1) Each transaction that is halted or curtailed; (2) the time at which halting or curtailment commenced; (3) the time at which the halting or curtailment terminated; (4) which Security Coordinator instituted the TLR procedures that led to such a halt or curtailment; (5) the name of the transmission facility or flowgate for which the TLR procedures were instituted; (6) what level in the TLR procedures has been called; (7) what paths are affected by the TLR procedures; (8) the quantity of megawatts per hour necessary to halt or curtail in order to achieve the desired relief for the constrained transmission facility or flowgate; (9) the total aggregate of megawatts per hour halted or curtailed; and (10) the quantity of megawatts per hour that are made available as a result of such halt or curtailment that would not have otherwise been available.[20]

Commission Conclusion

We believe that additional information about the state of the transmission system will enable customers to make better decisions about the quality of the transmission service they intend to purchase. We further believe that additional supporting information concerning curtailments and interruptions will make it easier to document unduly discriminatory practices concerning facilities critical to transmission capacity. However, a thorough consideration of this issue necessitates a more extensive record than we have before us at this time. To this end, we conclude that the industry is best situated to identify what other supporting information concerning curtailments and interruptions would be helpful and appropriate. We request that the MIC and the How Group prepare a report within three months from the date of publication of this final rule in the **Federal Register** outlining what additional supporting information about curtailments and interruptions should be posted on the OASIS and available for query. This report should address the scope of the information to support curtailments and interruptions and also include templates for queries of the additional information and for responses containing the information.

B. File Transfers, Automated Queries, and Extensive Requests for Data

When the Commission first proposed OASIS, it envisioned two primary methods of accessing information on OASIS. First, small customers would generally retrieve and post information using the interactive features of OASIS. Second, medium and large customers would generally use computer-to-computer communications to upload and download files. Using computer-to-computer communications, a customer could send a request (automated query) to an OASIS node's computer and the node's computer would respond with the requested files (download). To facilitate these file uploads and downloads, the Commission previously requested that the How Group develop standardized templates for OASIS transactions.

1. File Transfers and Automated Queries

In the NOPR, the Commission noted that it received Hotline calls showing misunderstandings about the use of file transfers and automated queries. In the NOPR, we proposed to add 18 CFR 37.6(a)(6) to allow OASIS users to make file transfers and automated computer-to-computer file transfers and queries of the nodes.

Comments

Cal ISO, MAPP and the How Group submitted comments on this issue. All three note that the S&CP Document has definitions and standards for ''file transfers'' and they recommend that the Commission replace references to ''file transfers'' with references to the upload and download specifications in the S&CP.

Commission Conclusion

At the outset, we note that the commenters correctly recognize that the S&CP Document contains definitions and standardized procedures for file transfers. The Commission did not intend to propose file transfers that were not defined in the S&CP Document. Accordingly, we will amend § 37.6 (a)(6) to clarify that OASIS nodes must allow OASIS users to make file transfers and queries as defined in the S&CP Document.

2. Extensive Requests for Data and Limits on OASIS Use

In the NOPR, we proposed to add a provision, 18 CFR § 37.5(c), to clarify that Responsible Parties are required to provide access to their OASIS sites for OASIS users making automated queries and extensive requests for data. In the NOPR, we also proposed to add a provision, 18 CFR 37.5(d), to permit Responsible Parties, under certain circumstances, to restrict access by OASIS users who use the system in a grossly inefficient manner and degrade the performance of the node. We suggested that if a Responsible Party and an OASIS user could not resolve the matter informally, the Responsible Party would be able to seek Commission approval to limit the grossly inefficient use of the system. Comments on this issue fall into three categories: (a) Disagreements with the proposal to require Commission approval before limits can be placed on individual OASIS users; (b) limits on heavy OASIS usage; and (c) the meaning of grossly inefficient use.

a. *Prior Commission Approval for OASIS Limits.* In the NOPR, we proposed that Commission approval be needed for imposition of limits on a user's access to OASIS because we wanted to avoid unwarranted limits on access. Furthermore, we wished to assure OASIS users that they would not be disconnected without cause.

[17] *See* Cinergy comments at 2–3.

[18] *See* Dynegy comments at 2.

[19] *See* EPMI comments at 3–4.

[20] *See* PECO comments at 2.

Comments

All commenters recognize that there are circumstances under which a user's automated query capability should be limited. However, commenters disagree over whether limits should be imposed before or after notification and concurrence by the Commission.

EPSA, EPMI and Power Navigator agree with the Commission's proposal to require Transmission Providers to obtain Commission approval before limiting a user's access to an OASIS node for grossly inefficient usage. Dynegy cautions that permitting Transmission Providers to limit OASIS use presents the potential for abuse and Transmission Providers could punish certain customers.[21]

The How Group, Cal ISO, Cinergy, MAPP, VEPCO, Southern Company and Southwest support allowing Responsible Parties to limit access to an OASIS node prior to Commission notification and approval. The How Group states that because OASIS nodes operate 24 hours a day, seven days a week and process transmission requests as they are received, the nodes are vulnerable to excessive demands by individual customers and therefore, limits on access should be available without Commission authorization.[22]

Furthermore, MAPP, MAIN, Cinergy, VEPCO and the How Group argue that mistakes and bugs in computer programs used to make the automated requests can inadvertently result in a request for more information than the user desires or the same data is repeatedly requested. These commenters argue that node performance could be seriously impaired unless Responsible Parties have the ability to limit a user's access before obtaining Commission concurrence. MAPP further cites the rapid responses associated with computer-to-computer communications and claims that a delay in disconnecting requests due to mistakes or bugs can inadvertently bring down a whole OASIS node.[23] Cinergy proposes that requests be terminated when it is clear that computer bugs or mistakes have occurred.

MAIN proposes that when a user's request seriously impacts node performance, the Responsible Party administering the node and the user should try to resolve the problem together. Cal ISO proposes that Responsible Parties should follow specific procedures, including promptly notifying the Commission about OASIS limits, working with the user to solve the problem and providing the Commission with a closure report that describes the problem and the resolution.[24] The How Group and MAPP also propose specific procedures for Responsible Parties to follow when they block access to OASIS nodes.

Commission Conclusion

We are persuaded that Responsible Parties should be permitted, without prior Commission concurrence, to limit access by users who seriously degrade node performance. At the same time, we must ensure that limits on usage are imposed for good reason and that reasonable efforts are made by both parties to resolve problems. Restrictions and disconnections from OASIS should occur in only very limited circumstances. When a problem arises due to grossly inefficient use, all parties should first attempt to resolve the problem in a cooperative manner without OASIS restriction or limitation. If the problem is not resolved in a timely fashion, a Responsible Party can limit a user's access without prior Commission approval. Notification of the restriction must be made to the Commission within two business days of the incident and include a description of the problem and whether a resolution was reached. A closure report describing how the problem was resolved must be filed with the Commission within one week of the incident.

If the problem requires Commission resolution, the Responsible Party will have the obligation to demonstrate to the Commission that the limited user seriously impacted the performance of the node, the node is properly sized for the number of users and types of customers and that the Responsible Party made a good faith effort to resolve the problem. In response, the user will have the obligation of demonstrating to the Commission that its queries were efficient and were the result of reasonable business needs. We anticipate in cases where a Responsible Party has no interest in generation that these types of disputes can be resolved without resort to Commission processes.

Similarly, for errors in queries, the Responsible Party can block the affected query and notify the user of the nature of the error. Users should correct the error before making any additional query. If there is a dispute over whether an error occurred, then the rules for grossly inefficient use would apply.

b. *Limits on Heavy Use of OASIS.* In the NOPR, the Commission proposed not to limit heavy use of automated computer-to-computer uploads and downloads (queries and responses) that arise from legitimate ordinary course of business needs. The NOPR distinguished between heavy use in the ordinary course of business and grossly inefficient use.

Comments

Detroit Edison, Southern Company, EPMI and EPSA agree with the Commission that heavy use alone should not justify disconnection from an OASIS node. Southern Company notes that the Commission's requirements regarding automated queries are consistent with the industry's movement toward conducting business on a moment-to-moment basis. Southern Company argues that moment-to-moment transactions can only be accommodated if large volumes of automated information can be transmitted by an OASIS node. Southern requests that the Commission emphasize automated query access over browser access.[25]

Power Navigator describes its experiences with OASIS nodes when using automated queries. Power Navigator states that it has been disconnected from an OASIS node, as a punitive measure after a problem was resolved and also, Power Navigator has been restricted by a node to only one automated query a day.[26] Furthermore, Power Navigator was disconnected from an OASIS node because of queries deemed inefficient without notice and the opportunity to make the query more efficient.

Southern Company reports that it has also experienced problems using automated queries and file transfers on several OASIS nodes. Southern argues that the ''inability of these OASIS nodes to meet the minimum requirements of the S&CP Document regarding automated queries and file transfers increases the transaction costs of market participants by increasing manpower and the time required to gather and analyze information.'' [27] Southern notes that the Commission has not sufficiently defined ''minimum performance requirements'' and that the lack of specificity has resulted in some OASIS nodes lacking sufficient capacity to accommodate bulk transactions. Southern Company requests that the Commission develop, or encourage the industry to develop, a benchmark program to determine if a node satisfies

[21] *See* Dynegy comments at 4.

[22] *See* How Group comments at 3–4.

[23] *See* MAPP comments at 4.

[24] *See* Cal ISO comments at 7–8.

[25] *See* Comments of Southern Company at 7.

[26] *See* Comments of Power Navigator at 1–2.

[27] Comments of Southern Company at 6–7.

the minimum performance requirements.

MAIN argues that even well-designed automated queries can significantly degrade OASIS performance. MAIN states that OASIS requires a substantial database and MAIN maintains the database on a daily basis. During periods of maintenance, the ability of computer systems to respond to queries and requests is inherently limited. Thus, MAIN claims that even well-designed automated queries can significantly degrade OASIS performance during periods of database maintenance.[28] MAIN notes that it was forced to put limits on ''traffic from particular Internet addresses that sent repeated and multiple queries to the MAIN OASIS node.''[29] The result is that MAIN restricts access by automated queries ten and one-half hours a day. MAIN suggests that some problems caused by automated queries could be reduced if users were required to furnish Transmission Providers with adequate and timely advance notice of usage requirements. MAIN would use this information in planning for system upgrades and other system modifications.

The How Group raises the question of what constitutes basic service and disagrees with the Commission's interpretation that the basic service level agreement allows large volume, computer-to-computer usage of OASIS to meet ordinary legitimate business needs of users. The How Group argues that the basic service level agreement only provides for average or normal uses of the system. The How Group further argues that the performance requirements in the S&CP Document are based on average, expected usage levels and cover average or normal users of the system.[30]

Commission Conclusion

We continue to believe that large volume usage and automated computer-to-computer file transfers and queries do not constitute the kind of excessive use of resources warranting limitation or disconnection, as discussed in the previous section. Thus, a particular user's heavy use of an OASIS node, even if it would require the node to be upgraded, would not, by itself, be a basis for limitation or disconnection.

However, based on the comments, we are convinced that the standards for node performance and bandwidth need refinement. We therefore request the MIC and the How Group to develop standards for node response time, node capabilities and the bandwidth of the node's connection to the Internet. We further request that the MIC and the How Group report back to the Commission within three months from the date of publication of this final rule in the **Federal Register**. The standards should explicitly incorporate the concept of requiring nodes to meet the legitimate, ordinary course of business needs of users.

The new standards should take into account the industry's experience with OASIS. The MIC and How Group have the option of proposing a redefinition of the existing standards[31] or if appropriate, they can develop a new approach. If the existing approach is used, the MIC and the How Group should consider that the assumption in the existing standard of 5 percent of customers in communication with a node at any time was developed before OASIS was implemented. The MIC should determine if a higher or lower percentage is more appropriate. Furthermore, the 28,800 bps/customer, used in the existing standards was a relatively fast modem speed in 1996 when the OASIS standards were formulated.[32] Today, many customers use faster connections to the Internet.

Furthermore, we agree with MAIN's suggestion that OASIS nodes would better meet user needs for automated queries if users notify Responsible Parties prior to increasing their demands significantly. We will, therefore, require users to notify a node of anticipated usage one month in advance of initiating a significant amount of queries or when users expect their use of automated queries to increase significantly. We believe it is appropriate to allow each node to determine reasonable criteria for such notification because nodes have varying requirements. Responsible Parties will post on their OASIS nodes the criteria under which users must notify them of increased usage of automated queries.

c. *''Grossly Inefficient'' Usage of OASIS.* In the NOPR, we proposed to not limit heavy use of automated queries that arose from legitimate, ordinary business needs. We distinguished between legitimate OASIS uses and grossly inefficient uses. By using the term grossly inefficient, we intended to address situations where a user fails to adopt more efficient methods of accessing a node or obtaining information in favor of very inefficient methods that may needlessly degrade or damage the node.

Comments

Cinergy, Detroit Edison, MAIN, Southern Company and VEPCO argue that unless the Commission clarifies the definition of ''grossly inefficient'' and what constitutes degradation of service on an OASIS node, there will be continued disputes over automated queries.

Commission Conclusion

We continue to believe that it would be impracticable to delineate all instances of ''gross inefficiency''. At the same time, we have narrowed the definition of grossly inefficient use by adding the new error category, by clarifying that heavy volume usage and automated computer-to-computer file transfers and queries do not constitute grossly inefficient use and by requiring OASIS users to notify Responsible Parties in advance of substantial increases in automated query usage. We believe that these actions reduce the areas of dispute.

Examples of grossly inefficient use include: (1) When a user seeks data in a resource-intensive wasteful way even though the same data could be obtained as quickly in a far less resource-consuming manner; and (2) when an OASIS user seeks updates more frequently than information on the OASIS is updated. This list, however, is not exhaustive and questions as to whether a particular user's access or use of the node is ''grossly inefficient'' will be resolved on a case-by-case basis. We also believe that Responsible Parties should use the disconnection procedures as a last resort.

[28] *See* comments of MAIN at 6–7.

[29] *Id.* at 7.

[30] *See* comments of How Group at 6.

[31] The existing standards are as follows:

Transmission Services Information Providers can only be responsible for the response capabilities of two portions of the Internet-based OASIS network:

- The response capabilities of the OASIS node server to process interactions with users; and
- The bandwidth of the connection(s) between the OASIS node server and the Internet.

Therefore, the OASIS response time requirements are as follows:

a. OASIS Node Server Response Time: The OASIS node server shall be capable of supporting its connection(s) to users with an average aggregate data rate of at least ''A'' bits per second. ''A'' is defined as follows:

A = N * R bits/sec

Where: N = 5% of registered Customers and R = 28,800 bits/sec per Customer.

b. OASIS Node Network Connection Bandwidth: The bandwidth ''B'' of the OASIS node connection(s) to the Internet shall be at least:

See Standards & Communications Protocol Document (Version 1.3) at section 5.3 (1998). Version 1.3 of the S&CP Document is posted on the Commission Issuance Posting System (accessed through the Commission's Internet Home Page at http://ferc.fed.us) or may be inspected in the Commission's Public Reference Room.

[32] See Order No. 889, FERC Stats & Regs. at 31,623.

C. Other Issues

MAIN proposed that users of automated query systems be charged for their use.[33] Similarly, CSW proposes an industry-wide OASIS usage charge whereby subscribers pay more when they use an OASIS node continuously and/or intensively.

We note that the issue of OASIS cost recovery was addressed in Orders No. 889[34] and 889–A.[35] In those orders, we concluded that the cost of developing an OASIS should be included in unbundled transmission rates and that variable costs of operating an OASIS should be recovered, to the extent possible, in usage fees. We left it to individual rate proceedings to determine which OASIS costs can be identified as varying with usage and how to set the recovery of these fees. However, the concept of automated queries has been a basic part of the functionality of OASIS since its inception and special charges for legitimate, ordinary course of business queries should not be imposed.[36]

A few other commenters raised issues that were not discussed in the NOPR. For example, Dynegy asks the Commission to revisit the posting of generator run status on OASIS nodes.[37] In addition, Southern Company complains that some Transmission Providers require users of their system to purchase expensive proprietary security software from third party vendors and that this practice imposes limits on OASIS. EPMI requests that the Commission require Transmission Providers to acknowledge receipt of faxed or electronically transferred OASIS requests when the request is received.[38]

All of these issues are beyond the scope of this proceeding and therefore, we will not address them at this time. Commenters will have the opportunity to raise these issues, as well as submit comments on additional issues, during the OASIS Phase II proceedings.

Regulatory Flexibility Act

The Regulatory Flexibility Act (RFA)[39] requires any proposed or final rule issued by the Commission to contain a description and analysis of the impact that the proposed or final rule would have on small entities or to contain a certification that the rule, if promulgated, will not have a significant economic impact on a substantial number of small entities. Order No. 889 contained a certification under section 605(b) of the RFA that the OASIS Final Rule would not have a significant economic impact on small entities within the meaning of the RFA.[40]

As discussed above, this final rule will make minor revisions to Part 37. Given that we do not expect these minor revisions to have any significant economic impact and given that we have granted waivers from the requirements of the OASIS Final Rule to small entities where appropriate, and will continue to do so, we hereby certify that the changes in 18 CFR Part 37 will not have a significant economic impact on a substantial number of small entities and that no regulatory flexibility analysis is required pursuant to 5 U.S.C. 603.

Environmental Statement

As explained in Order Nos. 888–A and 889–A, Order Nos. 888 and 889 were the joint subjects of the Final Environmental Impact Statement issued in Docket Nos. RM95–8–000 and RM94–7–001 on April 12, 1996. Given that this final rule makes only minor changes in the regulations, none of which would have any environmental impact, no separate environmental assessment or environmental impact statement is being prepared for this final rule.

Public Reporting Burden

As discussed previously, this final rule makes minor revisions to 18 CFR 37.6(e)(3)(ii). We do not believe that extending the retention period or extending the category of persons who may request the information on curtailments or interruptions will measurably increase the public reporting burden.

Nor do we believe our rule to amend 18 CFR 37.5 and 37.6 to clarify the required minimum access that Responsible Parties must provide to OASIS users, or to allow (under certain circumstances) limitations on access by grossly inefficient users, will increase the public reporting burden.

Consequently, the public reporting burden associated with issuance of this final rule is unchanged from our estimation in Order Nos. 889, 889–A, and 889–B.[41] The Commission has conducted an internal review of this conclusion and thereby has assured itself that there is specific, objective support for this information burden estimate. Moreover, the Commission has reviewed the collection of information required by Order Nos. 889, 889–A, and 889–B, and has determined that the collection of information is necessary and conforms to the Commission's plan, as described in those prior orders, for the collection, efficient management, and use of the required information.

Information Collection Statement

As explained in Order Nos. 889–A and 889–B, Order No. 889 contained an information collection statement for which the Commission obtained approval from the Office of Management and Budget (OMB).[42] Given that the changes on curtailments and interruptions make only minor revisions to the regulations, we do not believe that these changes would require any revision to the information collection statement approved by OMB for Order No. 889. Nor do we believe that our revisions to 18 CFR 37.5 and 37.6, to clarify the required minimum access Responsible Parties must provide to OASIS users, or to allow (under certain circumstances) limitations on access by grossly inefficient users, would require any revision to the information collection statement approved by OMB for Order No. 889. Accordingly, we conclude that OMB approval for this final rule will not be necessary. However, the Commission will send a copy of this final rule to OMB, for informational purposes only.

Interested persons may obtain information on the reporting requirements and associated burden estimates by contacting the Federal Energy Regulatory Commission, 888 First Street, N.E., Washington, D.C. 20426 [Attention: Michael Miller, Office of the Chief Information Officer, (202) 208–1415], and the Office of Management and Budget [Attention: Desk Officer for the Federal Energy Regulatory Commission (202) 395–3087 (telephone), 202–395–7285 (facsimile)]. In addition, interested persons may file written comments on the collections of information required by this rule and associated burden estimates by sending written comments to the Desk Officer for FERC at: Office of Management and Budget, Room 10202 NEOB, Washington, D.C. 20503, within 30 days of publication of this document in the **Federal Register**. Three copies of any comments filed with the Office of Management and Budget also should be sent to the following address: Secretary,

[33] MAIN comments at 12.

[34] *See* Order No. 889, FERC Stats. & Regs. ¶ 31,035 at 31,624–26.

[35] *See* Order No. 889–A, FERC Stats. & Regs. ¶ 31,049 at 30,576–77.

[36] This would also include automated queries by the public.

[37] Dynegy comments at 5.

[38] EPMI comments at 4.

[39] 5 U.S.C. 601–612.

[40] *See* Order No. 889, FERC State. & Regs. at 31,628.

[41] Order No. 889, FERC Stats. & Regs. ¶ 31,035 at 31,587–88, Order No. 889–A, FERC Stats. & Regs. ¶ 31,049 at 30,549–50, Order No. 889–B, 81 FERC ¶ 61,253 at 62,171 (1998).

[42] OMB Control No. 1902–0173.

Federal Energy Regulatory Commission, Room 1A, 888 First Street, N.E., Washington, D.C. 20426.

Effective Date and Congressional Notification

This rule will take effect on July 26, 1999. The Commission has determined, with the concurrence of the Administrator of the Office of Information and Regulatory Affairs of the Office of Management and Budget, that this rule is not a ''major rule'' within the meaning of section 351 of the Small Business Regulatory Enforcement Fairness Act of 1996.[43] The Commission will submit the rule to both houses of Congress and the Comptroller General prior to its publication in the **Federal Register**.

This final rule will not have an adverse effect on Year 2000 readiness. This rule makes only minor revisions to our regulations and no major system changes to OASIS are required. Furthermore, commenters did not cite any adverse effects of the rule on their Year 2000 preparation.

In this rule, we are extending the retention period and the availability of supporting information on curtailments and interruptions. These changes will not jeopardize work on the Year 2000 problem. Currently, our regulations require that the supporting information about curtailments and interruptions be maintained for 60 days and available to affected customers. We are extending the retention period to three years and we are allowing the Commission Staff and the public access to the information. Because Transmission Providers already must maintain information on curtailments and interruptions, extending the retention period and the access to this information will not affect Year 2000 preparations.

In addition, we are asking the How Group/MIC to prepare a report outlining what additional supporting information about curtailments and interruptions should be posted on the OASIS. We request that the report be prepared within 3 months from the date of publication of this final rule in the **Federal Register**. Therefore, the report will be received by the Commission in early September and final implementation, including the adoption of new templates, will not occur until after January 2000.

We also believe that the provision to allow (under certain circumstances) limitations on OASIS access by grossly inefficient users will not have any effect on Year 2000 readiness. The procedures we are adopting in 18 CFR 37.5(d) and 37.5(e) will not add any new information technology requirements. Instead, these regulations enable Responsible Parties to disconnect or limit an OASIS user's access to the node.

Finally, we are adopting a new procedure whereby OASIS users notify Responsible Parties one month prior to increasing their automated query demands. Each OASIS node will determine reasonable criteria for such notification and the methods for notification will be posted on the OASIS. We believe that this new provision will not hinder Year 2000 efforts. Posting the notification criteria on the OASIS is only a minor administrative change and this requirement should not divert resources from Year 2000 efforts.

List of Subjects in 18 CFR Part 37

Conflict of interests, Electric power plants, Electric utilities, Reporting and recordkeeping requirements.

By the Commission. Commissioner Bailey concurred with a separate statement attached.

Linwood A. Watson, Jr.,

Acting Secretary.

In consideration of the foregoing, the Commission amends part 37 in chapter I, title 18, Code of Federal Regulations, as set forth below.

PART 37—OPEN ACCESS SAME-TIME INFORMATION SYSTEMS AND STANDARDS OF CONDUCT FOR PUBLIC UTILITIES

1. The authority citation for part 37 continues to read as follows:

Authority: 16 U.S.C. 791–825r, 2601–2645; 31 U.S.C. 9701; 42 U.S.C. 7101–7352.

2. Section 37.5 is amended by redesignating paragraph (c) as paragraph (f), and by adding paragraphs (c), (d) and (e) to read as follows:

§ 37.5 Obligations of Transmission Providers and Responsible Parties.

* * * * *

(c) A Responsible Party may not deny or restrict access to an OASIS user merely because that user makes automated computer-to-computer file transfers or queries, or extensive requests for data.

(d) In the event that an OASIS user's grossly inefficient method of accessing an OASIS node or obtaining information from the node seriously degrades the performance of the node, a Responsible Party may limit a user's access to the OASIS node without prior Commission approval. The Responsible Party must immediately contact the OASIS user to resolve the problem. Notification of the restriction must be made to the Commission within two business days of the incident and include a description of the problem. A closure report describing how the problem was resolved must be filed with the Commission within one week of the incident.

(e) In the event that an OASIS user makes an error in a query, the Responsible Party can block the affected query and notify the user of the nature of the error. The OASIS user must correct the error before making any additional queries. If there is a dispute over whether an error has occurred, the procedures in paragraph (d) of this section apply.

* * * * *

3. Section 37.6 is amended by revising the section heading and paragraphs (a) introductory text, (a)(4), (a)(5), and (e)(3)(ii), and adding paragraph (a)(6) to read as follows:

§ 37.6 Information to be posted on the OASIS.

(a) The information posted on the OASIS must be in such detail and the OASIS must have such capabilities as to allow Transmission Customers to:

* * * * *

(4) Clearly identify the degree to which transmission service requests or schedules were denied or interrupted;

(5) Obtain access, in electronic format, to information to support available transmission capability calculations and historical transmission service requests and schedules for various audit purposes; and

(6) Make file transfers and automated computer-to-computer file transfers and queries as defined by the Standards and Communications Protocols Document.

* * * * *

(e) * * *

(3) * * *

(ii) Information to support any such curtailment or interruption, including the operating status of the facilities involved in the constraint or interruption, must be maintained and made available upon request, to the curtailed or interrupted customer, the Commission's Staff, and any other person who requests it, for three years.

* * * * *

4. Section 37.8 is added to read as follows:

§ 37.8 Obligations of OASIS users.

Each OASIS user must notify the Responsible Party one month in advance of initiating a significant amount of automated queries. The

[43] 5 U.S.C. 804(2).

OASIS user must also notify the Responsible Party one month in advance of expected significant increases in the volume of automated queries.

Note: The following attachments will not appear in the Code of Federal Regulations.

ATTACHMENT 1.—LIST OF COMMENTERS TO THE NOPR

Number/Commenter name	Abbreviation
(1) California Independent System Operator, Corp	(Cal ISO).
(2) Cinergy Services, Inc	(Cinergy).
(3) CSW Operating Companies	(CSW).
(4) Detroit Edison Company	(Detroit Edison).
(5) Dynegy, Inc	(Dynegy).
(6) Edison Electric Institute	(EEI).
(7) Electric Power Supply Association	(EPSA).
(8) Enron Power Marketing, Inc	(EPMI).
(9) Mid-America Interconnected Network, Inc	(MAIN).
(10) Mid-Continent Area Power Pool	(MAPP).
(11) OASIS How Working Group	(How Group).
(12) PECO Energy Co-Power Team	(PECO).
(13) Power Navigator	(Power Navigator).
(14) Southern Company Services, Inc	(Southern Company).
(15) Southwest Power Pool	(Southwest).
(16) Virginia Electric & Power Co	(VEPCO).

Attachment 2—Concurring Statement by Commissioner Bailey

Issued May 27, 1999.

Bailey, Commissioner, *concurring*

I support this rulemaking, which amends the Commission's regulations to improve in several respects the operation and effectiveness of OASIS sites. I write separately only to explain my support for one aspect of the final rule.

The Commission revises its OASIS regulations to allow access to supporting information on curtailments and interruptions, upon request, to Commission staff and the public, as well as to affected customers. Slip op. at 8–10. The Commission makes this revision despite the articulated concern of two intervenors—EPMI and EEI—that this type of information is commercially sensitive (EPMI) and, if disclosed, might impair the reliability of the interconnected transmission system (EEI).

In my judgment, the Commission's and the public's need for this type of information—for the purpose of detecting any undue discrimination in any pattern or practice of transmission curtailment—outweighs the articulated concern for the commercial and reliability implications of disclosure. Significantly, intervenor concerns of commercial and reliability sensitivity here are presented with little explanation and vigor.

In contrast, I have dissented in other cases where the commercial and competitive implications of information disclosure have been well defined and vigorously argued. *See Open Access Same-Time Information System and Standards of Conduct*, 83 FERC ¶ 61,360 at 62,467–69 (1998), *reh'g denied*, 85 FERC ¶ 61,139 at 61,493 (1999); *American Electric Power Company and Central and South West Corp.*, 86 FERC ¶ 61,091 at 61,334 (1999). I continue to believe that it is important for the Commission, when confronted with concern for the competitive implications of information disclosure, to balance carefully those concerns against the usefulness of that information in fulfilling the Commission's regulatory responsibilities. Here, unlike in other cases in which I have dissented, I am comfortable with the Commission's conclusion that the balance tips in favor of immediate disclosure.

Vicky A. Bailey,

Commissioner.

[FR Doc. 99–15061 Filed 6–24–99; 8:45 am]

BILLING CODE 6717–01–P

DEPARTMENT OF HEALTH AND HUMAN SERVICES

Food and Drug Administration

21 CFR Part 101

[Docket No. 99N–1979]

Apple Cider Food Safety Control; Workshop

AGENCY: Food and Drug Administration, HHS.

ACTION: Notice of workshop.

SUMMARY: The Food and Drug Administration (FDA) is announcing a workshop on food safety controls for the apple cider industry. The workshop will clarify issues related to the implementation of the agency's regulations requiring a warning statement for certain juice products. Specifically, the workshop will address pathogen reduction interventions that may be effective for apple cider production and the methods used to measure and validate such interventions. Results of research conducted by Federal, State, private, and academic institutions will be presented.

DATES: The workshop will be held on Thursday, July 15, 1999, from 9 a.m. to 4 p.m., and Friday, July 16, 1999, from 9 a.m. to noon. Written comments and requests to distribute materials and scientific studies at the meeting will be accepted until Friday, July 2, 1999. Submit written notices of registration by July 8, 1999.

ADDRESSES: The workshop will be held at the Department of Health and Human Services, Hubert Humphrey Bldg., conference room 705–A, 200 Independence Ave. SW., Washington, DC 20201. Submit registration and written notices of participation to Darrell J. Schwalm (address below). Submit written comments, written requests to distribute materials, and materials regarding relevant scientific studies to be distributed at the workshop to the Dockets Management Branch (HFA–305), Food and Drug Administration, 5630 Fishers Lane, rm. 1061, Rockville, MD 20852. Two copies of any comments and materials to be distributed are to be submitted, except that individuals may submit one copy. Comments and materials to be distributed are to be identified with the docket number found in brackets in the heading of this document.

FOR FURTHER INFORMATION CONTACT: Darrell J. Schwalm, Center for Food Safety and Applied Nutrition (HFS–625), Food and Drug Administration, 200 C. St. SW., Washington, DC 20204, 202–205–4040, FAX 202–205–4121 or e-mail ''dschwalm@bangate.fda.gov''.

Registration for the workshop will be provided on a first come first served basis. Persons interested in attending this workshop should, by Friday, July 8, 1999, fax their name, title, firm name,

address, telephone and fax number, and e-mail address to Darrell J. Schwalm (fax number above). If you need special accommodations due to a disability, please contact Darrell J. Schwalm (address above) at least 7 days in advance.

Interested persons should note that additional information regarding the workshop will be posted on FDA's web site ''www.cfsan.fda.gov'', as it becomes available. Accordingly, such persons are encouraged to visit that web site on a regular basis until the workshop convenes.

SUPPLEMENTARY INFORMATION: In the **Federal Register** of July 8, 1998 (63 FR 37030), FDA published a final regulation that required a warning statement on fruit and vegetable juice products that have not been processed to prevent, reduce, or eliminate pathogenic microorganisms that may be present in such juices. The regulation provides that the warning statement requirement does not apply to a juice that has been processed in a manner that will result in, at a minimum, a reduction in the pertinent microorganism of at least a 5-log magnitude (i.e., 100,000 fold). In the preamble to the proposed rule (63 FR 20486, April 24, 1998), FDA recognized that pasteurization is a process that can produce the 5-log reduction. The agency also noted that manufacturers may be able to use other technologies and practices, individually or in combination, to achieve the 5-log reduction, provided that the manufacturer's process is validated to achieve the 5-log reduction in the target microorganism.

In the preamble to the final regulation, FDA indicated it would be willing to meet with manufacturers or groups of manufacturers to discuss and evaluate their proposed processes. FDA also stated that in order to help processors meet the pathogen reduction standard, the agency would make available, in accordance with part 20 (21 CFR part 20) of its regulations, information received by the agency regarding processes that have been validated to achieve a 5-log reduction.

The July 15 and 16, 1999, workshop will include a discussion of the control measures, that FDA is aware of, that can be used for apple cider production and of the methods for measuring and validating the effectiveness of measures in reducing pathogens. At the beginning of the workshop, a proceedings document will be provided to registered participants.

FDA believes that this workshop will also provide an opportunity for industry representatives and other members of the public to discuss information regarding control measures that are believed to achieve the 5-log reduction. Participants are requested to bring to the workshop at least 50 copies of any written or published materials they wish to distribute. Agency experts will be available to answer technical food safety questions.

A video recording of the proceedings will be prepared; copies of the video may be requested in writing from the Freedom of Information Office (HFI–35), Food and Drug Administration, 5600 Fishers Lane, rm. 12A–16, Rockville, MD 20857, approximately 15-working days after the meeting. The video recording of the meeting, submitted comments, and materials for distribution will be available for public examination at the Dockets Management Branch (address above) between 9 a.m. and 4 p.m., Monday through Friday.

Dated: June 21, 1999.

Margaret M. Dotzel,

Acting Associate Commissioner for Policy Coordination.

[FR Doc. 99–16188 Filed 6–22–99; 12:38 pm]

BILLING CODE 4160–01–F

ENVIRONMENTAL PROTECTION AGENCY

40 CFR Part 52

[CA 207–155; FRL 6366–3]

Partial Withdrawal of Direct Final Rule for Approval and Promulgation of Implementation Plans; California State Implementation Plan Revision, South Coast Air Quality Management District

AGENCY: Environmental Protection Agency (EPA).

ACTION: Partial withdrawal of direct final rule.

SUMMARY: Due to an adverse comment, EPA is withdrawing the addition of a paragraph that was included as part of a direct final rule for the approval of revisions to the California State Implementation Plan. EPA published the direct final rule on May 4, 1999 (64 FR 23774), approving revisions of rules from the South Coast Air Quality Management District (SCAQMD). As stated in that **Federal Register** document, if adverse or critical comments were received by June 3, 1999, the rule would be withdrawn and it would not take effect. EPA subsequently received one adverse comment on one provision of that direct final rule and is withdrawing that provision. EPA will address the comment received in a subsequent final action in the near future. EPA will not institute a second comment period on this action.

DATES: The addition of 40 CFR 52.220(c)(254)(i)(D)(*2*) is withdrawn as of June 25, 1999.

FOR FURTHER INFORMATION CONTACT: Andrew Steckel, Rulemaking Office (AIR–4), Air Division, U.S. Environmental Protection Agency, Region IX, 75 Hawthorne Street, San Francisco, CA 94105, Telephone: (415) 744–1185.

SUPPLEMENTARY INFORMATION: See the information provided in the direct final rule located in the final rules section of the May 4, 1999 **Federal Register**, and in the proposed rule published in the May 4, 1999 (64 FR 23813) **Federal Register**. EPA received an adverse comment only on the addition of § 52.220(c)(254)(i)(D)(*2*), and we are withdrawing only that provision of the direct final rule. The other actions in the May 4, 1999 **Federal Register** are not affected.

List of Subjects in 40 CFR Part 52

Environmental protection, Air pollution control, Hydrocarbons, Incorporation by reference, Intergovernmental relations, Ozone, Reporting and recordkeeping requirements, Volatile organic compounds.

Dated: June 19, 1999.

David P. Howekamp,

Acting Regional Administrator, Region IX.

Accordingly, the addition of § 52.220(c)(254)(i)(D)(*2*) is withdrawn as of June 25, 1999.

[FR Doc. 99–16094 Filed 6–24–99; 8:45 am]

BILLING CODE 6560–50–M

ENVIRONMENTAL PROTECTION AGENCY

40 CFR Part 69

[FRL–6367–1]

State of Alaska Petition for Exemption From Diesel Fuel Sulfur Requirements

AGENCY: Environmental Protection Agency (EPA).

ACTION: Final rule.

SUMMARY: In this action, the Environmental Protection Agency (EPA) is granting areas of Alaska served by the Federal Aid Highway System a temporary exemption from EPA's sulfur and dye requirements for highway diesel fuel until January 1, 2004. EPA is not making a final decision at this time

on Alaska's request for a permanent exemption. Additional time is needed to consider Alaska's request for a permanent exemption because of the need to coordinate the decision with an upcoming nationwide rule on diesel fuel quality, lead-time considerations, and fuel dyeing requirements of another federal agency.

This decision is not expected to have a significant impact on the ability of Alaska's communities to attain the National Ambient Air Quality Standards for carbon monoxide or particulate matter, due to the limited contribution of emissions from diesel highway vehicles in those areas and the sulfur level currently found in highway vehicle diesel fuel used in Alaska.

DATES: This final rule is effective on July 1, 1999.

ADDRESSES: Copies of information relevant to this final rule are available for inspection in public docket A–96–26 at the Air Docket of the EPA, first floor, Waterside Mall, room M–1500, 401 M Street SW., Washington, D.C. 20460, (202) 260–7548, between the hours of 8:00 a.m. to 5:30 p.m. Monday through Friday. A duplicate public docket has been established at EPA Alaska Operations Office-Anchorage, Federal Building, Room 537, 222 W. Seventh Avenue, #19, Anchorage, AK 99513–7588, and is available from 8:00 a.m. to 5:00 p.m. Monday through Friday. A reasonable fee may be charged for copying docket materials.

FOR FURTHER INFORMATION CONTACT: Mr. Richard Babst, Environmental Engineer, Fuels Implementation Group, Fuels and Energy Division (6406-J), 401 M Street SW., Washington, D.C. 20460, Telephone (202) 564–9473, Telefax 202–565–2085, Internet address babst.richard@epa.gov.

SUPPLEMENTARY INFORMATION:

Table of Contents

I. Regulated Entities
II. Electronic Copies of Rulemaking Documents
III. Statutory Background for Alaska Exemption
IV. Petition by Alaska for Exemption
V. Decision to Grant Alaska Temporary Exemption
A. Description of Temporary Exemption
B. Justification for Temporary Exemption
C. Guidance Regarding Compliance Under Temporary Exemption
D. Impact of Exemption on Engine Warranty, Recall and Tampering
VI. Judicial Review of Today's Decision
VII. Public Participation in Today's Decision
VIII. Statutory Authority for Today's Decision
IX. Administrative Requirements for Today's Decision
A. Executive Order 12866: Administrative Designation and Regulatory Analysis
B. Regulatory Flexibility Act
C. Paperwork Reduction Act
D. Congressional Review Act
E. Unfunded Mandates Act
F. Executive Order 12875: Enhancing Intergovernmental Partnerships
G. Executive Order 13084: Consultation and Coordination with Indian Tribal Governments
H. Executive Order 13045: Children's Health Protection
I. National Technology Transfer and Advancement Act of 1995 (NTTAA)

I. Regulated Entities

Entities potentially regulated by this action are refiners, marketers, distributors, retailers and wholesale purchaser-consumers of diesel fuel for use in the state of Alaska. Regulated categories and entities include:

Category	NAICS codes	SIC codes	Examples of potentially regulated entities
Industry	32411 48691 42271 42272 48422 48423 44711 44719	2911 4613 5171 5172 4212 4213 5541	Petroleum distributors, marketers, retailers (service station owners and operators), wholesale purchaser consumers (fleet managers who operate a refueling facility to refuel highway vehicles).
Individuals			Any owner or operator of a diesel highway vehicle.

This table is not intended to be exhaustive, but rather provides a guide for readers regarding entities likely to be regulated by this action. This table lists the types of entities that EPA is now aware could potentially be regulated by this action. Other types of entities not listed in the table could also be regulated. To determine whether your facility, company, business organization, etc., is regulated by this action, you should carefully examine the criteria contained in § 69.51, § 80.29 and § 80.30 of title 40 of the Code of Federal Regulations as modified by today's action. If you have questions regarding the applicability of this action to a particular entity, consult the person listed in the preceding **FOR FURTHER INFORMATION CONTACT** section.

II. Electronic Copies of Rulemaking Documents

The preamble and regulatory language are also available electronically from the Government Printing Office Web sites. This service is free of charge, except for any cost you already incur for Internet connectivity. The electronic Federal Register version is made available on the day of publication on the Web site listed below.

http://www.access.gpo.gov/nara/cfr/ (either select desired date or use Search feature)

Please note that due to differences between the software used to develop the document and the software into which the document may be downloaded, changes in format, page length, etc. may occur.

III. Statutory Background for Alaska Exemption

Section 211(i)(1) of the Clean Air Act prohibits the manufacture, sale, supply, offering for sale or supply, dispensing, transport, or introduction into commerce of motor (highway) vehicle diesel fuel which contains a concentration of sulfur in excess of 0.05 percent by weight, or which fails to meet a cetane index minimum of 40, beginning October 1, 1993. Section 211(i)(2) requires the Administrator to promulgate regulations to implement and enforce the requirements of paragraph (1), and authorizes the Administrator to require that diesel fuel not intended for highway vehicles be dyed in order to segregate that fuel from highway vehicle diesel fuel. Section 211(i)(4) provides that the states of Alaska and Hawaii may seek an exemption from the requirements of subsection 211(i) in the same manner as provided in section 325 [1] of the Act, and

[1] Section 211(i)(4) mistakenly refers to exemptions under Section 324 of the Act (''Vapor Recovery for Small Business Marketers of Petroleum Products''). The proper reference is to section 325, and Congress clearly intended to refer to section 325, as shown by the language used in section 211(i)(4), and the United States Code

Continued

requires the Administrator to take final action on any petition filed under this subsection, which seeks exemption from the requirements of section 211(i), within 12 months of the date of such petition.

Section 325 of the Act provides that upon application by the Governor of Guam, American Samoa, the Virgin Islands, or the Commonwealth of the Northern Mariana Islands, the Administrator may exempt any person or source, or class of persons or sources, in such territory from any requirement of the Act, with some specific exceptions. Such exemption may be granted if the Administrator finds that compliance with such requirement is not feasible or is unreasonable due to unique geographical, meteorological, or economic factors of such territory, or such other local factors as the Administrator deems significant.

IV. Petition by Alaska for Exemption

On February 12, 1993, the Honorable Walter J. Hickel, then Governor of the State of Alaska, submitted a petition to exempt highway vehicle diesel fuel in Alaska from paragraphs (1) and (2) of section 211(i), except the minimum cetane index requirement of 40. Paragraph (1) prohibits highway vehicle diesel fuel from having a sulfur concentration greater than 0.05 percent by weight, or failing to meet a minimum cetane index of 40. Paragraph (2) requires the Administrator to promulgate regulations to implement and enforce the requirements of paragraph (1), and authorizes the Administrator to require that diesel fuel not intended for highway vehicles be dyed in order to segregate that diesel fuel from highway vehicle diesel fuel. The petition requested that the Environmental Protection Agency (EPA) temporarily exempt highway vehicle diesel fuel manufactured for sale, sold, supplied, or transported within the Federal Aid Highway System from meeting the sulfur content requirement specified in section 211(i) until October 1, 1996. The petition also requested a permanent exemption from such requirements for those areas of Alaska not reachable by the Federal Aid Highway System. The petition was based on geographical, meteorological, air quality, and economic factors unique to the State of Alaska.

EPA's decision on the petition was published on March 22, 1994 (59 FR 13610), and applied to all persons in Alaska subject to section 211(i) and related provisions in section 211(g) of the Act and EPA's low-sulfur requirement for highway vehicle diesel fuel in 40 CFR 80.29. Persons in communities served by the Federal Aid Highway System were exempted from compliance with the diesel fuel sulfur content requirement until October 1, 1996. Persons in communities that are not served by the Federal Aid Highway System were permanently exempted from compliance with the diesel fuel sulfur content requirement. Both the permanent and temporary exemptions apply to all persons who manufacture, sell, supply, offer for sale or supply, dispense, transport, or introduce into commerce, in the State of Alaska, highway vehicle diesel fuel. Alaska's exemptions do not apply to the minimum cetane requirement for highway vehicle diesel fuel.

On December 12, 1995, the Honorable Governor Tony Knowles, Governor of the State of Alaska, petitioned the Administrator for a permanent exemption (Petition) for all areas of the state served by the Federal Aid Highway System, that is, those areas covered only by the temporary exemption. On August 19, 1996, EPA published an extension to the temporary exemption until October 1, 1998 (61 FR 42812), to give ample time for EPA to consider comments to that petition that were subsequently submitted. On April 28, 1998 (63 FR 23241) EPA published a proposal to grant the Petition for a permanent exemption for all areas of the state served by the Federal Aid Highway System. Substantial public comments and substantive new information was submitted in response to the proposal. On September 16, 1998 (63 FR 49459) EPA extended the temporary exemption for another nine months until July 1, 1999, to give ample time for EPA to consider and evaluate that new information and to promulgate a final decision.

V. Decision To Grant Alaska Temporary Exemption

A. Description of Temporary Exemption

In this action, the Agency is granting a temporary exemption until January 1, 2004 from the diesel fuel sulfur content requirement of 0.05 percent by weight to those areas in Alaska served by the Federal Aid Highway System. For the same reasons, the Agency also is granting a temporary exemption until January 1, 2004 from those provisions of section 211(g)(2)[2] of the Act that prohibit the fueling of highway vehicles with high-sulfur diesel fuel. Sections 211(g) and 211(i) restrict the use of high-sulfur diesel fuel in highway vehicles.

Further, consistent with the March 22, 1994 Notice of Final Decision (59 FR 13610), and September 15, 1998 Notice of Final Decision (63 FR 49459), dyeing diesel fuel to be used in applications other than highway vehicles will be unnecessary in Alaska during the exemption period as long as that diesel fuel has a minimum cetane index of 40. The highway vehicle diesel fuel regulations, codified at 40 CFR 80.29, specifies that any diesel fuel that does not show visible evidence of the dye solvent red 164 is considered to be available for use in highway vehicles and subject to the sulfur and cetane index requirements. The Alaska Department of Environmental Conservation and refiners in Alaska have indicated to EPA that all diesel fuel produced for sale and marketed in Alaska meets the minimum cetane requirement for highway vehicle diesel fuel.

B. Justification for Temporary Exemption

Section 325 of the Clean Air Act provides that an exemption from the requirements of the Act may be granted upon petition of a governor of the territories if the Administrator determines that compliance with such requirement is ''not feasible or is unreasonable, due to unique geographical, meteorological, or economic factors of such territory, or such other local factors as the Administrator deems significant.'' Section 211(i) of the Act extends this authority to Alaska for purposes of exemption from the low-sulfur diesel fuel requirements of that provision.

Parts of Alaska have operated under temporary exemptions from the low-sulfur diesel fuel requirements since 1993, and the current exemption expires on July 1, 1999. For the reasons described later in this section, EPA will not make a final decision on a

citation used in § 806 of the Clean Air Act Amendments of 1990, Public Law No. 101–549. Section 806 of the Amendments, which added paragraph (i) to section 211 of the Act, used 42 U.S.C. 7625–1 as the United States Code designation, the proper designation for section 325 of the Act. Also see 136 Cong. Rec. S17236 (daily ed. October 26, 1990) (statement of Sen. Murkowski).

[2] This subsection makes it unlawful for any person to introduce or cause or allow the introduction into any highway vehicle of diesel fuel which they know or should know contains a concentration of sulfur in excess of 0.05 percent (by weight). It would clearly be impossible to hold persons liable for misfueling with diesel fuel with a sulfur content higher than 0.05 percent by weight when such fuel is permitted to be sold or dispensed for use in highway vehicles. The final action of this document includes an exemption from this prohibition, but does not include an exemption from the prohibitions in Section 211(g)(2) relating to the minimum cetane index or alternative aromatic level.

permanent exemption prior to the expiration of the current temporary exemption. EPA believes that it would be unreasonable to require compliance in Alaska with the low-sulfur diesel fuel requirements as of July 1, 1999. The prior history of temporary exemptions for Alaska, the need to coordinate the decision on Alaska's petition for a permanent exemption with an upcoming nationwide rule on diesel fuel quality, lead-time considerations, and fuel dyeing requirements are significant local factors that are the basis for granting Alaska this extension to the current temporary exemption.

Prior History of Temporary Exemptions

On February 12, 1993, the Governor of Alaska petitioned EPA under sections 211(i) and 325 for a temporary exemption from diesel fuel sulfur requirements for areas served by the FAHS. EPA granted Alaska the temporary exemption until October 1, 1996. Because the State of Alaska planned to establish a Task Force (in which an EPA representative participated) to evaluate the need for a permanent exemption, EPA provided Alaska with ''adequate time to prepare and submit another exemption request.'' 59 FR 13613 (March 22, 1994). ''If a new exemption request is submitted, EPA will publish another notice in the **Federal Register** and re-examine the issue of an exemption.'' *Id*.

On December 12, 1995, the Governor petitioned EPA for a permanent exemption from the diesel sulfur requirements for the areas served by the FAHS. EPA ''reserv[ed] the decision on the state's request for a permanent exemption, so the agency may consider possible alternatives for a longer period'' than the two years granted. 61 FR 42814 (August 19, 1996). EPA extended the exemption for another period of 24 months ''or until such time as a decision is made on the permanent exemption, whichever is shorter.'' (61 FR 42816, August 19, 1996). EPA also stated that ''areas in Alaska served by the Federal Aid Highway System are also exempt from the related 211(g)(2) provisions until such time as a decision has been made on the state's petition for a permanent exemption.'' *Id*. The Agency stated it would propose a decision on Alaska's request for a permanent waiver. *Id*.

On April 28, 1998, EPA published a proposed decision to grant Alaska a permanent exemption. 63 FR 23241 (April 28, 1998.) On September 16, 1998, EPA granted another temporary extension until July 1, 1999 to provide EPA and the State of Alaska more time to evaluate the public comments submitted in response to the proposal, specifically regarding the use of high-sulfur diesel fuel in engines manufactured to meet future more stringent emissions standards. 63 FR 49459 (September 16, 1998).

Subsequent to granting the last temporary exemption, EPA issued an Advance Notice of Proposed Rulemaking summarizing the issues and inviting comment on whether EPA should set new nationwide requirements for fuel used in diesel engines under section 211(c) of the Clean Air Act, in order to bring about large environmental benefits through the enabling of a new generation of diesel emission control technologies. 64 FR 26142, May 13, 1999. EPA expects that the section 211(c) rulemaking will also address the issue of the appropriate level of diesel sulfur in Alaska in the context of the proposed Tier 2 emission standards for light-duty vehicles and possible future more stringent emission standards for heavy-duty vehicles and non-road equipment.

Lead-Time Considerations

EPA believes that in this situation lead-time considerations are also a significant local factor as provided under section 325. Requiring Alaska to comply with low-sulfur diesel fuel requirements as of July 1, 1999 when the current temporary exemption expires, is unreasonable due to lead-time considerations. Because of the temporary status of the previous and current exemptions, EPA did not intend that Alaska would be required to comply prior to a final decision on a permanent exemption. Therefore, the affected parties in Alaska are not in a position to reasonably comply as of July 1, 1999, as EPA has not made a decision on a permanent exemption. Alaska has recently indicated to EPA that at least three years would be needed to implement any new requirements once a final decision has been reached by EPA.

Need To Coordinate Decision With Upcoming Nationwide Rule

The need to coordinate a decision on a permanent exemption with the upcoming section 211(c) rulemaking presents a significant local factor. In effect, there are two rulemakings involving almost the same question of the appropriate level of diesel sulfur in Alaska. EPA believes that coordination between the final decision on the exemption and the section 211(c) rulemaking is important, and EPA plans to make a final decision on Alaska's petition for a permanent exemption in the section 211(c) rulemaking.

Failure to coordinate the petition for exemption from the section 211(i) requirements with the section 211(c) rulemaking could potentially cause significantly increased costs for regulated parties in Alaska. For example, if EPA were to deny Alaska's petition for a permanent exemption, fuel in Alaska would have to meet the 0.05 percent sulfur requirement. EPA would provide necessary lead-time as part of setting the termination date for an exemption, and regulated parties in Alaska would have to make investments to refine, distribute and sell the low-sulfur diesel fuel. If EPA were to promulgate even lower sulfur standards in the section 211(c) rulemaking, the regulated parties in Alaska would be subject to a two-tiered implementation. Because EPA has not determined what, if any, lower sulfur level would be required, parties in Alaska are not able to prepare in advance for a possible second tier. The costs associated with a two-tiered implementation could be substantially higher than the cost of a single implementation, based on a single coordinated decision in the section 211(c) rulemaking about the level of sulfur for diesel fuel in Alaska.

Fuel Dyeing Requirements

Any expiration of the low-sulfur exemption has implications under the Internal Revenue Code. Section 4081 of the Internal Revenue Code (26 U.S.C. 4081) imposes a tax on the removal of diesel fuel from a terminal at the terminal rack. However, a tax is not imposed if, among other conditions, the diesel fuel is indelibly dyed in accordance with Treasury regulations. Dyed diesel fuel can be used legally (for tax purposes) in nontaxable uses such as for heating oil, fuel in stationary engines, or fuel in non-highway vehicles. A substantial penalty applies if dyed diesel fuel is used for taxable purposes such as in registered highway vehicles.

In 1996, Congress enacted an exception to the dyeing requirement so that undyed diesel fuel could be removed from a terminal tax free if, among other requirements, the fuel is removed for ultimate sale or use in an area of Alaska during the period the area is exempt from EPA's sulfur content requirements under section 211(i)(4) of the Clean Air Act. Treasury regulations (26 CFR 46.4082–5) generally establish a system for collecting the federal diesel fuel tax at the wholesale level in Alaska. This system is similar to the system used by the State of Alaska for state fuel tax. The person liable for the federal tax generally is the person who is licensed by Alaska as a qualified dealer or a

retailer that has been registered by the Internal Revenue Service (IRS).

If EPA's temporary exemption for the FAHS areas of Alaska were to expire on July 1, 1999, then under Treasury regulations, the federal fuel tax would be imposed on all undyed diesel fuel that is removed from any terminal in the FAHS areas, regardless of the use that is later made of the fuel. Removals from these terminals would be exempt from the tax only if the fuel contains a dye of a prescribed color and composition. Consequently, Alaska would be required by the Treasury regulations to either dye the non-road tax-exempt fuel or pay the on-road tax at the current rate of 24.4 cents per gallon.

According to an attachment to the comments submitted by the Trustees for Alaska, Alaska used approximately 600 million gallons of distillate each year (excluding fuel used for aviation) for the fiscal years ending June 30, 1996 and June 30, 1997. If none of that fuel were dyed and the sulfur exemption were to expire, the tax liability for Alaska (at 24.4 cents per gallon) would be approximately $146.4 million per year, compared to only $19.4 million per year if only that fuel used for highway purposes were taxed. The taxed parties could later file for refunds for the fuel they could show was not used in highway vehicles. Alternatively, Alaska could comply with the Treasury regulations by dyeing the approximately 86 percent of that fuel intended for non-highway use. However, to implement such capacity by July 1, 1999 would be a significant and unreasonable burden for refiners, distributors and consumers of diesel fuel. Comments received in response to the proposal indicated that each additional storage tank needed to segregate the dyed and undyed fuels with supporting infrastructure may cost $600,000, and there are over 80 tank farms in Alaska that would require additional tankage. Similarly each additional tanker truck required to avoid cross-contamination of dyed and undyed fuels costs approximately $250,000. Finally, those comments indicated that significant lead-time would be needed.

Conclusion That EPA Should Grant Temporary Exemption Until 2004

Based on all of these significant local factors, it is unreasonable to mandate that low-sulfur highway vehicle diesel fuel be available for use in Alaska for areas served by the Federal Aid Highway System after the current temporary exemption expires on July 1, 1999. Instead, EPA is extending the temporary exemption until January 1, 2004.

The section 211(c) rulemaking discussed above will make a coordinated and final decision on the level of motor vehicle diesel sulfur that will be required in Alaska. EPA therefore does not expect that there would be any further extensions of the temporary exemption. EPA expects final action in the upcoming section 211(c) rulemaking to be in 2000.

The January 1, 2004 date in today's final rule would provide Alaska approximately four years lead time, and approximately three years lead time from the section 211(c) rulemaking. If appropriate, EPA will re-evaluate the January 1, 2004 date for expiration of the exemption during the section 211(c) rulemaking, for example when considering in detail the impacts of any two-tiered implementation for Alaska. EPA will also evaluate whether it is appropriate to shorten the timeframe of the exemption, as part of the process of coordinating a final decision on these matters in that rulemaking.

C. Guidance Regarding Compliance Under Temporary Exemption

Since today's rule exempts diesel fuel in Alaska from the sulfur requirement until January 1, 2004, dyeing diesel fuel under EPA's regulations to be used in applications other than highway vehicles will be unnecessary in Alaska until January 1, 2004. However, in the event high-sulfur diesel fuel is shipped from Alaska to the lower-48 states, it would be necessary for the producer or shipping facility to add dye to the noncomplying fuel before it is introduced into commerce in the lower-48 states. In addition, supporting documentation (e.g., product transfer documents) must clearly indicate the fuel may not comply with the sulfur standard for highway vehicle diesel fuel and is not to be used as a highway vehicle fuel. Conversely, EPA will not require high-sulfur diesel fuel to be dyed if it is being shipped from the lower-48 states to Alaska, but supporting documentation must substantiate that the fuel is only for shipment to Alaska and that it may not comply with the sulfur standard for highway vehicle diesel fuel.

EPA will assume that all undyed diesel fuel found in any state, except in the state of Alaska, is intended for sale in any state and subject to the diesel fuel standards, unless the supporting documentation clearly specifies the fuel is to be shipped only to Alaska. The documentation should further clearly state that the fuel may not comply with the Federal diesel fuel standards. If such product enters the market of any state, other than Alaska, (e.g., is on route to or at a dispensing facility in a state other than Alaska) and is found to exceed the applicable sulfur content standard, all parties will be presumed liable, as set forth in the regulations. However, EPA will consider the appropriate evidence in determining whether a party caused the violation.

With regard to the storage of diesel fuel in any state other than Alaska, a refiner or transporter will not be held liable for diesel fuel that does not comply with the applicable sulfur content standard and dye requirement if it can show that the diesel fuel is truly being stored and is not being sold, offered for sale, supplied, offered for supply, transported or dispensed. However, once diesel fuel leaves a refinery or transporter facility, a party can no longer escape liability by claiming that the diesel fuel was simply in storage. Although diesel fuel may temporarily come to rest at some point after leaving a refinery or transporter facility, the intent of the regulations is to cover all diesel fuel being distributed in the marketplace. Once diesel fuel leaves a refinery or shipping facility it is in the marketplace and as such is in the process of being sold, supplied, offered for sale or supply, or transported.

D. Impact of Exemption on Engine Warranty, Recall and Tampering

EPA previously addressed the impact of an exemption from the low-sulfur diesel fuel requirements on engine recall liability, warranty and tampering issues in the American Samoa decision,[3] Guam decision,[4] and initial Alaska decision.[5] For this final rule, EPA is addressing the recall liability and warranty issues in a manner consistent with those earlier decisions. The tampering issue is treated in a somewhat different manner.

Impact of Exemption on Recall Liability

If EPA determines that a substantial number of any class or category of heavy-duty engines do not comply with the federal emission requirements, although properly used and maintained, the engine manufacturer is responsible for recalling and repairing the engines. EPA typically determines whether engines comply with applicable federal emission standards by testing in-use

[3] The Agency granted American Samoa's petition for a permanent exemption from the diesel sulfur requirements on July 20, 1992, 57 FR 32010.

[4] The Agency granted Guam's petition for a permanent exemption from the diesel sulfur requirements on September 21, 1993, 58 FR 48968.

[5] The Agency granted the State of Alaska's petition for a temporary exemption from the diesel sulfur requirements on March 22, 1994, 59 FR 13610.

engines which have been properly maintained and used. If an engine fueled with exempted diesel fuel (such as the high-sulfur fuel supplied in Alaska) was included in such testing, and the testing showed exceedance of the applicable emission standards, EPA will determine, on a case-by-case basis, if the exceedance is the result of the use of exempted fuel. If EPA determines that the use of exempted diesel fuel is the sole cause why a substantial number of the class or category of heavy-duty engines fails to meet the applicable emission standards, EPA would not seek a recall of the class or category of engines based on these data.

For Alaska, as in the Guam and American Samoa decisions, EPA does not intend to use test results (emissions levels) from engines used and operated in Alaska that utilize high-sulfur diesel fuel (over 0.05 percent by weight) to show noncompliance by those engines for the purpose of recalling an engine class. However, in cases in which it is determined that the overall class is subject to recall for reasons other than the use of exempted fuel in Alaska, individual engines will not be excluded from repair on the basis of the fuel used. Manufacturers are responsible for repairing any engine in the recalled class regardless of its history of tampering or improper maintenance.

Impact of Exemption on the Manufacturers' Emission Warranty and on the Durability of New Technology Engines

The Agency acknowledges that engines that were certified to meet the federal emission standards using low-sulfur diesel fuel may in some cases be unable to meet those federal emissions standards if they use high-sulfur diesel fuel. However, EPA believes an exemption from the general warranty provisions of section 207 of the Act is unnecessary to protect manufacturers from unreasonable warranty recoveries by purchasers. The emission defect warranty requirements under section 207(a) require an engine manufacturer to warrant that the engine shall conform at the time of sale to applicable emission regulations and that the engine is free from defects that cause the engine to fail to conform with applicable regulations for its useful life. In practice, this warranty is applicable to a specific list of emissions and emissions-related engine components.

It has been consistent EPA policy that misuse or improper maintenance of a vehicle or engine by the purchaser, including misfueling, may create a reasonable basis for denying warranty coverage for the specific emissions and emissions-related engine components affected by the misuse. In Alaska, while use of fuel exempted from the sulfur content limitation cannot be considered ''misfueling,'' it will have the same adverse effect on emissions control components. Thus, EPA believes that where the use of exempted diesel fuel in fact has an adverse impact on the emissions durability of specific engine parts or systems, such as a catalyst, the manufacturer has a reasonable basis for denying warranty coverage on that part or other related parts. As has consistently been EPA's policy, those components not adversely affected by the use of exempted diesel fuel should continue to receive full emissions warranty coverage.

EPA anticipates that many on-highway, heavy-duty diesel engines will utilize some form of cooled EGR technology in order to meet the 2004 emission standards. Further, the Agency recognizes that under the recent Consent Decrees entered into by the majority of diesel engine manufacturers, diesel engines will have to meet the 2004 emission standards beginning in October of 2002. Finally, the Agency recognizes that the use of cooled EGR systems with high-sulfur fuel may contribute to engine durability problems, requiring owners to overhaul their engines more frequently than the intervals for which they were designed. EPA believes, however, that within the time frame of this temporary exemption, engine durability problems will not likely be a significant problem for heavy-duty engine owners.

Because the new engine technology is not expected to be marketed until late 2002, and because of the slow turnover rate of new heavy-duty diesel vehicles in Alaska, EPA estimates that during the temporary exemption less then five percent of the total Alaska diesel fleet will incorporate the new engine technology, and only during the last 15 months of the exemption. Additionally, the State of Alaska expects that during the temporary exemption adequate low-sulfur fuel will be supplied to the Alaska market to meet the market demands created by operators of the new technology diesel engines. EPA and the State of Alaska have been informed that diesel fuel with sulfur levels near or below the low sulfur limit of 500 ppm currently is being produced at one refinery in Alaska. Further, the State of Alaska has committed to work with the petroleum industry in Alaska to make low sulfur fuel available to truck owners with new technology heavy-duty diesel engines.

EPA will address the durability issue when making the final decision on Alaska's section 211(i) petition for permanent exemption as part of the upcoming nationwide rule on diesel fuel quality. However, if subsequent to today's document, the Administrator determines that supplies of low sulfur diesel fuel are inadequate to meet the requirements of new technology diesel engines and that significant environmental harm is resulting from adverse impacts of high sulfur diesel fuel on these vehicles, this exemption may be reconsidered.

Impact of Exemption on Tampering Liability

Subsequent to the 1995 petition for a permanent exemption from the diesel fuel sulfur requirements, the Engine Manufacturers Association (EMA) requested enforcement discretion regarding the removal of catalytic converters because of an indicated plugging problem caused by the high-sulfur diesel fuel in Alaska. However, information subsequently collected by EPA from several heavy-duty engine manufacturers demonstrates that catalyst plugging is mainly a cold weather problem and not a high-sulfur fuel issue. EPA is also aware that the majority of the plugged catalysts have been eliminated. In a letter to EPA of September 19, 1997, the EMA indicated that the immediate problems that led to EMA's earlier request have been resolved. Accordingly, EPA sees no need for an exemption that allows the removal of catalysts in the field, or that permits manufacturers to introduce into commerce catalyzed-engines without catalysts.

VI. Judicial Review of Today's Decision

Under section 307(b)(1) of the Clean Air Act, EPA hereby finds that these regulations are of local or regional applicability. Accordingly, judicial review of this action is available only in the United States Court of Appeals for the circuit applicable to Alaska within 60 days of publication.

VII. Public Participation in Today's Decision

The Agency received Alaska's request for a permanent exemption for the Federal Aid Highway System areas in December of 1995. Soon afterwards, the Agency received comments on the petition from the Alaska Center for the Environment, the Alaska Clean Air Coalition, and the Engine Manufacturers of America. EPA believed the issues raised by those comments and possible tightening of heavy-duty highway vehicle engine standards in 2004 necessitated further consideration before the Agency made a decision on

Alaska's request for a permanent exemption.

The Agency published a proposed rule for a permanent exemption to allow interested parties an additional opportunity to request a hearing or to submit comments. EPA subsequently received a request for a public hearing, but that request was soon withdrawn. EPA extended the comment period until June 12, 1998, and received comments before and after that date.

EPA's decision to extend the exemption until January 1, 2004 is not a decision based on the merits of those comments. Instead, EPA's decision is based on the unreasonableness of imposing the low-sulfur diesel fuel requirement as of July 1, 1999, based on the significant local factors supporting this decision are described herein.

VIII. Statutory Authority For Today's Decision

Authority for the action in this final rule is in sections 211 (42 U.S.C. 7545) and 325(a)(1) (42 U.S.C. 7625–1(a)(1)) of the Clean Air Act, as amended.

The effective date of this rule is July 1, 1999. If the effective date of this rule were any later, there would be some period of time when Alaska would lose its current exemption from low-sulfur diesel fuel and dye requirements because the current exemption expires on July 1, 1999. ''EPA did not intend that parties in Alaska would be required to comply with low sulfur diesel fuel or dye requirements prior to the effective date of this final rule. EPA therefore finds that there is good cause under 5 U.S.C. 553(d) to make this rule effective on July 1, 1999.''

IX. Administrative Requirements for Today's Decision

A. Executive Order 12866: Administrative Designation and Regulatory Analysis

Under Executive Order 12866[6], the Agency must determine whether a regulation is ''significant'' and therefore subject to OMB review and the requirements of the Executive Order. The Order defines ''significant regulatory action'' as one that is likely to result in a rule that may:

(1) Have an annual effect on the economy of $100 million or more, or adversely affect in a material way the economy, a sector of the economy, productivity, competition, jobs, the environment, public health or safety, or State, local or tribal governments of communities;

(2) Create a serious inconsistency or otherwise interfere with an action taken or planned by another agency;

(3) Materially alter the budgetary impact of entitlements, grants, user fees, or loan programs or the rights and obligations of recipients thereof, or

(4) Raise novel legal or policy issues arising out of legal mandates, the President's priorities, or the principles set forth in this Executive Order.[7]

It has been determined that this rule is not a ''significant regulatory action'' under the terms of Executive Order 12866 and is therefore not subject to OMB review.

B. Regulatory Flexibility Act

The Regulatory Flexibility Act (RFA) generally requires an agency to conduct a regulatory flexibility analysis of any rule subject to notice and comment rulemaking requirements unless the agency certifies that the rule will not have a significant economic impact on a substantial number of small entities. Small entities include small businesses, small not-for-profit enterprises, and small governmental jurisdictions.

This final rule will not have a significant impact on a substantial number of small entities because today's action to continue the current temporary exemption of the low-sulfur diesel fuel requirements in the State of Alaska for four and a half more years, will not result in any additional economic burden on any of the affected parties, including small entities involved in the oil industry, the automotive industry and the automotive service industry. EPA is not imposing any new requirements on regulated entities, but instead is continuing an exemption from a requirement, which makes it less restrictive and less burdensome. Therefore, EPA has determined that this action will not have a significant economic impact on a substantial number of small entities.

C. Paperwork Reduction Act

The Paperwork Reduction Act of 1980, 544 U.S.C. 3501 *et seq.*, and implementing regulations, 5 CFR Part 1320, do not apply to this action as it does not involve the collection of information as defined therein.

D. Congressional Review Act

The Congressional Review Act, 5 U.S.C. 801 *et seq.*, as added by the Small Business Regulatory Enforcement Fairness Act of 1996, generally provides that before a rule may take effect, the agency promulgating the rule must submit a rule report, which includes a copy of the rule, to each House of the Congress and to the Comptroller General of the United States. EPA will submit a report containing this rule and other required information to the U.S. Senate, the U.S. House of Representatives, and the Comptroller General of the United States prior to publication of the rule in the **Federal Register**. A Major rule cannot take effect until 60 days after it is published in the **Federal Register**. This action is not a ''major rule'' as defined by 5 U.S.C. 804(2). This rule will be effective July 1, 1999.

E. Unfunded Mandates Act

Under section 202 of the Unfunded Mandates Reform Act of 1995, EPA must prepare a budgetary impact statement to accompany any proposed or final rule that includes a federal mandate with estimated costs to the private sector of $100 million or more, or to state, local, or tribal governments of $100 million or more in the aggregate. Under section 205, EPA must select the most cost-effective and least burdensome alternative that achieves the objectives of the rule and is consistent with statutory requirements. Section 203 requires EPA to establish a plan for informing and advising any small governments that may be significantly or uniquely impacted by the rule.

EPA has determined that this final rule imposes no new federal requirements and does not include any federal mandate with costs to the private sector or to state, local, or tribal governments. Therefore, the Administrator certifies that this rule does not require a budgetary impact statement.

F. Executive Order 12875: Enhancing the Intergovernmental Partnership

Under Executive Order 12875, EPA may not issue a regulation that is not required by statute and that creates a mandate upon a State, local or tribal government, unless the Federal government provides the funds necessary to pay the direct compliance costs incurred by those governments, or EPA consults with those governments. If EPA complies by consulting, Executive Order 12875 requires EPA to provide to the Office of Management and Budget a description of the extent of EPA's prior consultation with representatives of affected State, local and tribal governments, the nature of their concerns, copies of any written communications from the governments, and a statement supporting the need to issue the regulation. In addition, Executive Order 12875 requires EPA to develop an effective process permitting

[6] 58 FR 51736 (October 4, 1993).

[7] *Id.* at section 3(f)(1)–(4).

elected officials and other representatives of State, local and tribal governments ''to provide meaningful and timely input in the development of regulatory proposals containing significant unfunded mandates.''

Today's rule does not create a mandate on State, local or tribal governments. The rule does not impose any enforceable duties on these entities. It only extends an existing temporary exemption of the low-sulfur diesel fuel requirements in the State of Alaska. Accordingly, the requirements of section 1(a) of Executive Order 12875 do not apply to this rule.

G. Executive Order 13084: Consultation and Coordination With Indian Tribal Governments

Under Executive Order 13084, EPA may not issue a regulation that is not required by statute, that significantly or uniquely affects the communities of Indian tribal governments, and that imposes substantial direct compliance costs on those communities, unless the Federal government provides the funds necessary to pay the direct compliance costs incurred by the tribal governments, or EPA consults with those governments. If EPA complies by consulting, Executive Order 13084 requires EPA to provide to the Office of Management and Budget, in a separately identified section of the preamble to the rule, a description of the extent of EPA's prior consultation with representatives of affected tribal governments, a summary of the nature of their concerns, and a statement supporting the need to issue the regulation. In addition, Executive Order 13084 requires EPA to develop an effective process permitting elected officials and other representatives of Indian tribal governments ''to provide meaningful and timely input in the development of regulatory policies on matters that significantly or uniquely affect their communities.''

Today's rule does not significantly or uniquely affect the communities of Indian tribal governments. EPA has determined that this final rule imposes no new federal requirements, but rather extends an existing temporary exemption of the low-sulfur diesel fuel requirements in the State of Alaska. Accordingly, the requirements of section 3(b) of Executive Order 13084 do not apply to this rule.

H. Executive Order 13045: Children's Health Protection

''Protection of Children from Environmental Health Risks and Safety Risks'' (62 FR 19885, April 23, 1997) applies to any rule that: (1) Is determined to be ''economically significant'' as defined under E.O. 12866, and (2) concerns an environmental health or safety risk that EPA has reason to believe may have a disproportionate effect on children. If the regulatory action meets both criteria, the Agency must evaluate the environmental health or safety effects of the planned rule on children, and explain why the planned regulation is preferable to other potentially effective and reasonably feasible alternatives considered by the Agency.

This State of Alaska Petition from Exemption from Diesel Fuel Sulfur Requirements rule is not subject to the Executive Order because it is not economically significant as defined in E.O. 12866, and because in the circumstances present in this rulemaking, the analysis required under section 5–501 of the Order would not have the potential to influence the regulation. The decision to extend the exemption in this rulemaking is based primarily on factors other than health and safety, because those factors will be addressed separately in a related national rulemaking that will address the appropriate level of sulfur in diesel fuel. EPA has issued an Advanced Notice of Proposed Rulemaking (64 FR 26142, May 13, 1999) involving the appropriate level of diesel sulfur nationwide. This national rulemaking will include any analysis that is required under Executive Order 13045.

I. National Technology Transfer and Advancement Act of 1995 (NTTAA)

Section 12(d) of the National Technology Transfer and Advancement Act of 1995 (NTTAA), Pub L. No. 104–113, section 12(d) (15 U.S.C. 272 note) directs EPA to use voluntary consensus standards in its regulatory activities unless to do so would be inconsistent with applicable law or otherwise impractical. Voluntary consensus standards are technical standards (e.g., materials specifications, test methods, sampling procedures, and business practices) that are developed or adopted by voluntary consensus standards bodies. The NTTAA directs EPA to provide Congress, through OMB, explanations when the Agency decides not to use available and applicable voluntary consensus standards.

This action does not involve technical standards. Therefore, EPA did not consider the use of any voluntary consensus standards.

List of Subjects in 40 CFR Part 69

Environmental protection, Air pollution control, Alaska.

Dated: June 18, 1999.

Carol M. Browner,

Administrator.

For the reasons set out in the preamble, title 40 chapter I of the Code of Federal Regulations is amended as follows:

PART 69—SPECIAL EXEMPTIONS FROM REQUIREMENTS OF THE CLEAN AIR ACT

1. The authority citation for part 69 continues to read as follows:

Authority: 42 U.S.C. 7545(1) and (g), 7625–1.

Subpart E—[Amended]

2. Section 69.51 is amended by revising paragraph (c) to read as follows:

§ 69.51 Exemptions.

* * * * *

(c) Beginning January 1, 2004, the exemptions provided in paragraphs (a) and (b) of this section are applicable only to fuel used in those areas of Alaska that are not served by the Federal Aid Highway System.

[FR Doc. 99–16228 Filed 6–24–99; 8:45 am]

BILLING CODE 6560–50–P

ENVIRONMENTAL PROTECTION AGENCY

40 CFR Part 272

[FRL–6364–2]

Idaho: Incorporation by Reference of Approved State Hazardous Waste Management Program

AGENCY: Environmental Protection Agency (EPA).

ACTION: Immediate final rule.

SUMMARY: Under the Resource Conservation and Recovery Act of 1976, as amended (RCRA), the EPA may grant States Final Authorization to operate their hazardous waste management programs in lieu of the Federal program. EPA uses part 272 of Title 40 Code of Federal Regulations (CFR) to provide notice of the authorization status of State programs and to incorporate by reference those provisions of the State statutes and regulations that are part of the authorized State program. The purpose of this action is to codify Idaho's authorized hazardous waste program in 40 CFR part 272. This rule incorporates by reference provisions of Idaho's hazardous waste statutes and regulations and clarifies which of these provisions are authorized and federally enforceable. Unless adverse written comments are received, the EPA's

decision to incorporate by reference Idaho's authorized hazardous waste program will take effect as provided below.

DATES: This incorporation by reference of the approved state hazardous waste management program for Idaho will become effective on August 24, 1999, if EPA receives no adverse comment. Should EPA receive such comments, EPA will withdraw this rule before its effective date by publishing a notice of withdrawal in the FR. Any comments on Idaho's incorporation by reference of the approved state hazardous waste management program must be filed by July 26, 1999.

ADDRESSES: Mail written comments to Jeff Hunt, U.S. EPA, Region 10, 1200 Sixth Avenue, Mail stop WCM–122, Seattle, WA 98101.

FOR FURTHER INFORMATION CONTACT: Jeff Hunt, U.S. EPA, Region 10, 1200 Sixth Avenue, Mail stop WCM–122, Seattle, WA 98101, phone number (206) 553–0256.

SUPPLEMENTARY INFORMATION:

A. Background

Section 3006 of RCRA, 42 U.S.C. 6926 *et seq.*, allows the EPA to authorize State hazardous waste programs to operate in the State in lieu of the Federal hazardous waste program. EPA provides notice of its authorization of State programs in 40 CFR part 272 and incorporates by reference therein the State statutes and regulations that are a part of the authorized State program under RCRA. This effort provides clearer notice to the public of the scope of the authorized programs. The incorporation by reference of State authorized programs in the CFR should substantially enhance the public's ability to discern the current status of the authorized State program and clarify the extent of Federal enforcement authority.

Effective February 4, 1991 (55 FR 50327) and subsequently revised effective August 10, 1992 (57 FR 24757), EPA incorporated by reference Idaho's then authorized hazardous waste program, including all HSWA and non-HSWA Federal requirements promulgated as of June 30, 1990. The purpose of today's **Federal Register** document is to incorporate by reference EPA's authorization of Idaho's subsequent two revisions to that program. This rule incorporates by reference provisions of State hazardous waste statutes and regulations and clarifies which of these provisions are included in the authorized and Federally enforceable program.

B. Idaho Authorized Hazardous Waste Program

Idaho received Final Authorization for its RCRA hazardous waste base program on March 26, 1990, effective April 9, 1990 (55 FR 11015). EPA incorporated by reference the then authorized hazardous waste program in Subpart N of 40 CFR part 272. The State statutes and regulations are incorporated by reference at Sec. 272.651(a), and the Memorandum of Agreement, the Attorney General's Statement and the Program Description are referenced at 40 CFR 272.651(b), 272.651(c) and 272.651(d), respectively.

Since the most recent codification, Idaho has received authorization for revisions to its program on April 12, 1995, effective June 11, 1995 (60 FR 18549) and on October 21, 1998, effective January 19, 1999 (63 FR 56086). In this document EPA is revising the incorporation by reference of Idaho's authorized hazardous waste program in Subpart N of 40 CFR part 272, to include these revisions.

The Agency retains the authority under sections 3007, 3008, 3013 and 7003 of RCRA to undertake enforcement actions in authorized States. With respect to such an enforcement action, the Agency will rely on Federal sanctions, Federal inspection authorities, and the Federal Administrative Procedure Act rather than the authorized State analogues to these requirements. Therefore, the Agency does not intend to incorporate by reference for purposes of enforcement such particular, authorized Idaho enforcement authorities. Section 272.651(a)(1) of 40 CFR lists those enforcement authorities that are part of the authorized program but are not incorporated by reference.

The public also needs to be aware that some provisions of a State's hazardous waste management program are not part of the Federally authorized State program. These nonauthorized provisions include:

(1) Provisions that are not part of the RCRA subtitle C program because they are ''broader in scope'' than RCRA subtitle C (see 40 CFR 271.1(i));

(2) Federal provisions which the State incorporated into its regulations when the State adopted Federal regulations by reference, but for which the State is not authorized;

(3) Unauthorized amendments to authorized State provisions.

State provisions that are ''broader in scope'' than the Federal program are not part of the RCRA authorized program and EPA will not enforce them. Therefore, they are not incorporated by reference in 40 CFR part 272. For reference and clarity, section 272.651(a)(3) of 40 CFR lists the Idaho statutory and regulatory provisions which are ''broader in scope'' than the Federal program. Although EPA will not enforce these provisions, the State may enforce them under State law.

C. HSWA Provisions

The Agency is not amending 40 CFR part 272 to include HSWA requirements and prohibitions that are implemented by EPA. Section 3006(g) of RCRA provides that any HSWA requirement or prohibition (including implementing regulations) take effect in authorized and not authorized States at the same time. A HSWA requirement or prohibition supersedes any less stringent or inconsistent State provision which may have been previously authorized by EPA (50 FR 28702, July 15, 1985). EPA has the authority to implement HSWA requirements in all States, including authorized States, until the States become authorized for such requirement or prohibition. Authorized States are required to revise their programs to adopt the HSWA requirements and prohibitions, and then to seek authorization for those revisions pursuant to 40 CFR part 271.

Instead of amending the 40 CFR part 272 every time a new HSWA provision takes effect under the authority of RCRA section 3006(g), EPA will wait until the State receives authorization for its analog to the new HSWA provision before amending the State's 40 CFR part 272 incorporation by reference. Until then, persons wanting to know whether a HSWA requirement or prohibition is in effect should refer to 40 CFR 271.1(j), as amended, which lists each such provision.

Some existing State requirements may be similar to the HSWA requirement implement by EPA. However, until EPA authorizes those State requirements, EPA can only enforce the HSWA requirements and not the State analogs. EPA will not codify those State requirements until the State receives authorization for those requirements.

Unfunded Mandates Reform Act

Title II of the Unfunded Mandates Reform Act of 1995 (UMRA), Pub. L. 104–4, establishes requirements for Federal agencies to assess the effects of their regulatory actions on State, local, and tribal governments and the private sector. Under section 202 of the UMRA, EPA generally must prepare a written statement, including a cost-benefit analysis, for proposed and final rules with ''Federal mandates'' that may result in expenditures to State, local,

and tribal governments, in the aggregate, or to the private sector, of $100 million or more in any one year. Before promulgating an EPA rule for which a written statement is needed, section 205 of the UMRA generally requires EPA to identify and consider a reasonable number of regulatory alternatives and adopt the least costly, most cost-effective or least burdensome alternative that achieves the objectives of the rule. The provisions of section 205 do not apply when they are inconsistent with applicable law. Moreover, section 205 allows EPA to adopt an alternative other than the least costly, most cost-effective or least burdensome alternative if the Administrator publishes with the final rule an explanation why that alternative was not adopted. Before EPA establishes any regulatory requirements that may significantly or uniquely affect small governments, including tribal governments, it must have developed under section 203 of the UMRA a small government agency plan. The plan must provide for notifying potentially affected small governments, enabling officials of affected small governments to have meaningful and timely input in the development of EPA regulatory proposals with significant Federal intergovernmental mandates, and informing, educating, and advising small governments on compliance with the regulatory requirements.

The section 202 and 205 requirements do not apply to today's action because it is not a ''Federal mandate'' and because it does not impose annual costs of $100 million or more for State, local and/or tribal governments in the aggregate, or the private sector. Today's action contains no Federal mandates for State, local or tribal governments or the private sector because it does not impose new or additional enforceable duties on any State, local or tribal governments or the private sector. This rule merely incorporates by reference existing requirements with which regulated entities must already comply under State and Federal law. For this same reason, this action will not result in annual expenditures of $100 million or more for State, local, and/or tribal governments in the aggregate, or the private sector because it incorporates by reference an existing State program that EPA previously authorized. Costs to the State, local and/or tribal governments, and to regulated entities already exist under the authorized program. Further, as it applies to the State, this action does not impose a Federal intergovernmental mandate because UMRA does not include duties arising from participation in a voluntary federal program.

The requirements of section 203 of UMRA also do not apply to today's action because it contains no regulatory requirements that might significantly or uniquely affect small governments. Although small governments may be hazardous waste generators, transporters, or own and/or operate treatment, storage, and disposal facilities, this codification incorporates into the CFR Idaho's requirements which EPA already authorized under 40 CFR part 271. Small governments are not subject to any additional significant or unique requirements by virtue of this action.

Certification Under the Regulatory Flexibility Act

Pursuant to the Regulatory Flexibility Act (5 U.S.C. 601 *et seq.*, as amended by the Small Business Regulatory Enforcement Fairness Act of 1996), whenever an agency is required to publish a notice of rulemaking for any proposed or final rule, it must prepare and make available for public comment a regulatory flexibility analysis that describes the effect of the rule on small entities (i.e., small businesses, small organizations, and small governmental jurisdictions). This analysis is unnecessary, however, if the agency's administrator certifies that the rule will not have a significant economic impact on a substantial number of small entities.

The EPA has determined that this codification will not have a significant economic impact on a substantial number of small entities. Such small entities which are hazardous waste generators, transporters, or which own and/or operate treatment, storage, or disposal facilities are already subject to the State requirements authorized by EPA under 40 CFR part 271. The EPA's codification does not impose any additional burdens on these small entities.

Pursuant to the provision at 5 U.S.C. 605(b), the Agency hereby certifies that this codification will not have a significant economic impact on a substantial number of small entities. This codification incorporates Idaho's requirements which have been authorized by EPA under 40 CFR part 271 into the CFR. It does not impose any new burdens on small entities. This rule, therefore, does not require a regulatory flexibility analysis.

Submission to Congress and the Comptroller General

The Congressional Review Act, 5 U.S.C. 801 *et seq.*, as added by the Small Business Regulatory Enforcement Fairness Act of 1996, generally provides that before a rule may take effect, the agency promulgating the rule must submit a rule report, which includes a copy of the rule, to each House of the Congress and to the Comptroller General of the United States. The EPA will submit a report containing this rule and other required information to the U.S. Senate, the U.S. House of Representatives and the Comptroller General of the United States prior to publication of the rule in today's **Federal Register**. This rule is not a ''major rule'' as defined by 5 U.S.C. 804(2).

Compliance With Executive Order 12866

The Office of Management and Budget has exempted this rule from the requirements of Executive Order 12866.

Compliance With Executive Order 12875

Under Executive Order 12875, EPA may not issue a regulation that is not required by statute and that creates a mandate upon a State, local or tribal government, unless the Federal government provides the funds necessary to pay the direct compliance costs incurred by those governments, or EPA consults with those governments. If EPA complies with consulting, Executive Order 12875 requires EPA to provide to the Office of Management and Budget a description of the extent of EPA's prior consultation with representatives of affected State, local and tribal governments, the nature of their concerns, copies of any written communications from the governments, and a statement supporting the need to issue the regulation. In addition, Executive Order 12875 requires EPA to develop an effective process permitting elected officials and other representatives of State, local and tribal governments ''to provide meaningful and timely input in the development of regulatory proposals containing significant unfunded mandates.''

This rule does not create a mandate on State, local or tribal governments. The rule does not impose any enforceable duties on these entities. The State administers its hazardous waste program voluntarily, and any duties on other State, local or tribal governmental entities arise from that program, not from this today's action. This rule merely incorporates by reference existing requirements with which regulated entities must already comply under State and Federal law. Accordingly, the requirements of

Executive Order 12875 do not apply to this rule.

Compliance With Executive Order 13045

Executive Order 13045, ''Protection of Children from Environmental Health Risks and Safety Risks,'' applies to any rule that: (1) The Office of Management and Budget determines is ''economically significant'' as defined under Executive Order 12866, and (2) concerns an environmental health or safety risk that EPA has reason to believe may have a disproportionate effect on children. If the regulatory action meets both criteria, the Agency must evaluate the environmental health or safety effects of the planned rule on children and explain why the planned regulation is preferable to other potentially effective and reasonably feasible alternatives considered by the Agency.

This rule is not subject to E.O. 13045 because it is not an economically significant rule as defined by E.O. 12866, and because it does not involve decisions based on environmental health or safety risks.

Compliance With Executive Order 13084

Under Executive Order 13084, EPA may not issue a regulation that is not required by statute, that significantly or uniquely affects the communities of Indian tribal governments, and that imposes substantial direct compliance costs on those communities, unless the Federal government provides the funds necessary to pay the direct compliance costs incurred by the tribal governments, or EPA consults with those governments. If EPA complies with consulting, Executive Order 13084 requires EPA to provide to the Office of Management and Budget, in a separately identified section of the preamble to the rule, a description of the extent of EPA's prior consultation with representatives of affected tribal governments, a summary of the nature of their concerns, and a statement supporting the need to issue the regulation. In addition, Executive Order 13084 requires EPA to develop an effective process permitting elected officials and other representatives of Indian tribal governments ''to provide meaningful and timely input in the development of regulatory policies on matters that significantly or uniquely affect their communities.''

This rule is not subject to E.O. 13084 because it does not significantly or uniquely affects the communities of Indian tribal governments. Idaho is not authorized to implement the RCRA hazardous waste program in Indian country. This action has no effect on the hazardous waste program that EPA implements in the Indian country within the State.

Paperwork Reduction Act

Under the Paperwork Reduction Act, 44 U.S.C. 3501 *et seq.*, Federal agencies must consider the paperwork burden imposed by any information request contained in a proposed rule or a final rule. This rule will not impose any information requirements upon the regulated community.

National Technology Transfer and Advancement Act

Section 12(d) of the National Technology Transfer and Advancement Act of 1995 (''NTTAA''), Pub L. No. 104–113, § 12(d) (15 U.S.C. 272 note) directs EPA to use voluntary consensus standards in its regulatory activities unless to do so would be inconsistent with applicable law or otherwise impractical. Voluntary consensus standards are technical standards (e.g., materials specifications, test methods, sampling procedures, and business practices) that are developed or adopted by voluntary consensus standards bodies. The NTTAA directs EPA to provide Congress, through OMB, explanations when the Agency decides not to use available and applicable voluntary consensus standards.

This action does not involve technical standards. Therefore, EPA did not consider the use of any voluntary consensus standards.

List of Subjects in 40 CFR Part 272

Environmental Protection, Administrative practice and procedure, Confidential business information, Hazardous waste, Hazardous waste transportation, Incorporation by reference, Indian lands, Intergovernmental relations, Penalties, Reporting and recordkeeping requirements, Water pollution control, Water supply.

Authority: This rule is issued under the authority of Sections 2002(a), 3006 and 7004(b) of the Solid Waste Disposal Act as amended 42 U.S.C. 6912(a), 6926, 6974(b).

Dated: June 9, 1999.

Chuck Findley,

Acting Regional Administrator, U.S. Environmental Protection Agency, Region 10.

For the reasons set forth in the preamble, 40 CFR part 272 is amended as follows:

PART 272—APPROVED STATE HAZARDOUS WASTE MANAGEMENT PROGRAMS

1. The authority citation for part 272 continues to read as follows:

Authority: Sections 2002(a), 3006, and 7004(b) of the Solid Waste Disposal Act, as amended by the Resource Conservation and Recovery Act of 1976, as amended, 42 U.S.C. 6912(a), 6926, and 6974(b).

Subpart N—[Amended]

§ 272.650 [Amended]

2. Section 272.650 is removed and reserved.

3. Section 272.651 is revised to read as follows:

§ 272.651 Idaho State-Administered Program: Final Authorization.

(a) Pursuant to section 3006(b) of RCRA, 42 U.S.C. 6926(b), Idaho has final authorization for the following elements as submitted to EPA in Idaho's base program application for final authorization which was approved by EPA effective on April 9, 1990. Subsequent program revision applications were approved effective on June 5, 1992, August 10, 1992, June 11, 1995, and January 19, 1999.

(b) *State statutes and regulations.* (1) The Idaho statutes and regulations cited in this paragraph are incorporated by reference as part of the hazardous waste management program under subtitle C of RCRA, 42 U.S.C. 6921 *et seq.*

(i) The EPA Approved Idaho Statutory Requirements Applicable to the Hazardous Waste Management Program, dated April 1999.

(ii) The EPA Approved Idaho Regulatory Requirements Applicable to the Hazardous Waste Management Program, dated April 1999.

(2) The following statutes and regulations concerning State procedures and enforcement, although not incorporated by reference, are part of the authorized State program:

(i) Idaho Code (I.C.) containing the General Laws of Idaho Annotated, Volume 7A, Title 39, Chapter 44, ''Hazardous Waste Management'', published in 1993 by the Michie Company, Law Publishers, Charlottesville, Virginia: sections 39–4404; 39–4405 (except 39–4405(8)); 39–4406; 39–4407; 39–4408(4); 39–4409(2) (except first sentence); 39–4409(3); 39–4409(4) (first sentence); 39–4410; 39–4412 through 39–4416; 39–4418; 39–4419; 39–4421; 39–4422; and 39–4423(3) (a)&(b).

(ii) 1996 Cumulative Pocket Supplement to the Idaho Code, Volume 7A, Title 39, Chapter 44, ''Hazardous Waste Management'', published in 1996

by the Michie Company, Law Publishers, Charlottesville, Virginia: sections 39–4411(1); 39–4411(3); and 39–4411(6).

(iii) Idaho Code (I.C.) containing the General Laws of Idaho Annotated, Volume 7A, Title 39, Chapter 58, ''Hazardous Waste Facility Siting Act'', published in 1993 by the Michie Company, Law Publishers, Charlottesville, Virginia: sections 39–5804; 39–5809; 39–5810; 39–5813(2); 39–5814; 39–5816; 39–5817; and 39–5818(1).

(iv) Idaho Code (I.C.) containing the General Laws of Idaho Annotated, Volume 2, Title 9, Chapter 3, ''Public Writings'', published in 1990 by the Michie Company, Law Publishers, Charlottesville, Virginia: sections 9–337(10); 9–337(11); 9–338; 9–339; and 9–344(2).

(v) 1994 Cumulative Pocket Supplement to the Idaho Code (I.C.), Volume 2, Title 9, Chapter 3, ''Public Writing'', published in 1994 by the Michie Company, Law Publishers, Charlottesville, Virginia: sections 9–340 and 9–343.

(vi) Idaho Department of Health and Welfare Rules and Regulations, Idaho Administrative Code, IDAPA 16, Title 1, Chapter 5, ''Rules and Standards for Hazardous Waste'', as published on July 1, 1997: sections 16.01.05.000; 16.01.05.356.02 through 16.01.05.356.05; 16.01.05.800; 16.01.05.850; 16.01.05.996; 16.01.05.997; and 16.01.05.999.

(3) The following statutory and regulatory provisions are broader in scope than the Federal program, are not part of the authorized program, and are not incorporated by reference:

(i) Idaho Code containing the General Laws of Idaho Annotated, Volume 7A, Title 39, Chapter 44, ''Hazardous Waste Management'', published in 1993 by the Michie Company, Law Publishers, Charlottesville, Virginia: sections 39–4428 and 39–4429.

(ii) 1996 Cumulative Pocket Supplement to the Idaho Code, Volume 7A, Title 39, Chapter 44, ''Hazardous Waste Management'', published in 1994 by the Michie Company, Law Publishers, Charlottesville, Virginia: sections 39–4403 (6)&(14) and 39–4427.

(iii) Idaho Code containing the General Laws of Idaho Annotated, Volume 7A, Title 39, Chapter 58, ''Hazardous Waste Siting Act'', published in 1993 by the Michie Company, Law Publishers, Charlottesville, Virginia: section 39–5813(3).

(iv) Idaho Department of Health and Welfare Rules and Regulations, Idaho Administrative Code, IDAPA 16, Title 1, Chapter 5, ''Rules and Standards for Hazardous Waste'', as published on July 1, 1997: sections 16.01.05.355; and 16.01.05.500.

(4) *Memorandum of Agreement.* The Memorandum of Agreement between EPA Region 10 and the Division of Environmental Quality, signed by the EPA Regional Administrator on October 6, 1998, is referenced as part of the authorized hazardous waste management program under subtitle C of RCRA, 42 U.S.C. 6921 *et seq.*

(5) *Statement of Legal Authority.* ''Attorney General's Statement for Final Authorization'', signed by the Attorney General of Idaho on July 5, 1988 and revisions, supplements and addenda to that Statement dated July 3, 1989, February 13, 1992, December 29, 1994, September 16, 1996, and October 3, 1997 are referenced as part of the authorized hazardous waste management program under subtitle C of RCRA, 42 U.S.C. 6921 *et seq.*

(6) *Program Description.* The Program Description and any other materials submitted as part of the original application or as supplements thereto are referenced as part of the authorized hazardous waste management program under subtitle C of RCRA, 42 U.S.C. 6921 *et seq.*

4. Appendix A to part 272, State Requirements, is amended by adding in alphabetical order the listing for ''Idaho'' to read as follows:

* * * * *

Idaho

The statutory provisions include:

Idaho Code containing the General Laws of Idaho Annotated, Volume 7A, Title 39, Chapter 44, ''Hazardous Waste Management'', 1993: sections 39–4402; 39–4408 (1)–(3); 39–4409(1) (except fourth and fifth sentences); 39–4409(2) (first sentence); 39–4409(4) (except first sentence); 39–4409(5); 39–4409(6); 39–4409(7); 39–4409(8); 39–4423 (except 39–4423(3)(a)&(b)); and 39–4424.

1996 Cumulative Pocket Supplement to the Idaho Code, Volume 7A, Title 39, Chapter 44, ''Hazardous Waste Management'', 1996: sections 39–4403 (except 39–4403 (6)&(14)); 39–4411(2); 39–4411(4); and 39–4411(5).

Idaho Code containing the General Laws of Idaho Annotated, Volume 7A, Title 39, Chapter 58, ''Hazardous Waste Facility Siting Act'', published in 1993 by the Michie Company, Law Publishers, Charlottesville, Virginia: sections 39–5802; 39–5803; 39–5808; 39–5811; 39–5813(1); and 39–5818(2).

Copies of the Idaho statutes that are incorporated by reference are available from Michie Company, Law Publishers, 1 Town Hall Square, Charlottesville, VA 22906–7587.

The regulatory provisions include:

Idaho Department of Health and Welfare Rules and Regulations, Idaho Administrative Code, IDAPA 16, Title 1, Chapter 5, ''Rules and Standards for Hazardous Waste'', as published on July 1, 1997: sections 16.01.05.001; 16.01.05.002; 16.01.05.003; 16.01.05.004; 16.01.05.005; 16.01.05.006; 16.01.05.007; 16.01.05.008; 16.01.05.009; 16.01.05.010; 16.01.05.011; 16.01.05.012; 16.01.05.013; 16.01.05.014; 16.01.05.015; 16.01.05.016; 16.01.05.356.01; and 16.01.05.998.

Note: The 1997 Idaho Code, section 16.01.05.011, contains a typographical error discovered during codification. The reference to ''39–4403(16)'' should read ''39–4403(17)''. Idaho has subsequently corrected this typographical error in the 1998 Idaho Code and will submit the corrected version in the next authorization package.

* * * * *

[FR Doc. 99–16088 Filed 6–24–99; 8:45 am]

BILLING CODE 6560–50–P

FEDERAL COMMUNICATIONS COMMISSION

47 CFR Part 51

[CC Docket No. 98–147]

Deployment of Wireline Services Offering Advanced Telecommunications Capability; Correction

AGENCY: Federal Communications Commission.

ACTION: Final rule; correction.

SUMMARY: This document corrects the announcement of effective date of a final rule relating to local competition published in the **Federal Register** on June 2, 1999.

EFECTIVE DATE: The amendment to 47 CFR 51.321 (f) and (h) and 51.323 (b) and (i)(3) published at 64 FR 23229 (April 30, 1999) are effective June 1, 1999.

FOR FURTHER INFORMATION CONTACT: Staci Pies, Attorney, Common Carrier Bureau, Policy and Program Planning Division, (202) 418–1580 or via the Internet at *spies@fcc. gov.* Further information may also be obtained by calling the Common Carrier Bureau's TTY number: 202–418–0484.

SUPPLEMENTARY INFORMATION:

Background

The Commission amended its rules relating to local competition. See 63 FR

23229, April 30, 1999. Sections 51.321 (f) and (h) and 51.323 (b) and (i)(3) of these rules contain new and modified information collection requirements. We stated that these sections ''contain information collection requirements that are not effective until approved by the Office of Management and Budget. The FCC will publish a document in the **Federal Register** announcing the effective date for those sections.''

Correction

The announcement of effective date contained the wrong date. We inadvertently announced that the collections of information were effective on May 13, 1999. In the **Federal Register** of June 2, 1999, on page 29599, in the first column, the effective date should be changed to read: ''The amendments to 47 CFR 51.321 (f) and (h) and 51.323 (b) and (i)(3) published at 64 FR 23229 (April 30, 1999) are effective on June 1, 1999.''

Federal Communications Commission.

Magalie Roman Salas,

Secretary.

[FR Doc. 99–16183 Filed 6–24–99; 8:45 am]

BILLING CODE 6712–01–P

DEPARTMENT OF COMMERCE

National Oceanic and Atmospheric Administration

50 CFR Parts 285 and 635

[Docket No. 990618163–9163–01; I.D. 052799D]

RIN 0648–AM81

Atlantic Highly Migratory Species; Bluefin Tuna Catch Reporting

AGENCY: National Marine Fisheries Service (NMFS), National Oceanic and Atmospheric Administration (NOAA), Commerce.

ACTION: Final rule; determination of state jurisdiction.

SUMMARY: NMFS has determined that the State of Maryland has implemented regulations for reporting of Atlantic bluefin tuna (BFT) landings in the recreational fishery that are mandatory, at least as restrictive as the Federal reporting requirements, and effectively enforced. Therefore, participants in the recreational fishery who land BFT in the State of Maryland are exempt from calling in their catch through NMFS' automated catch reporting system and must report their catch via the Maryland BFT landing tag program. All other Federal regulations applicable to Atlantic tunas still apply within the boundary of the State of Maryland.

DATES: Effective June 22,1999 through November 27, 1999.

ADDRESSES: Requests for copies of the final rule and information on Atlantic tunas catch reporting should be directed to Rebecca Lent, Chief, Highly Migratory Species Management Division, Office of Sustainable Fisheries (F/SF1), NMFS, 1315 East-West Highway, Silver Spring, MD 20910–3282. Send comments regarding the burden-hour estimates or other aspects of the collection-of-information requirement contained in this rule to Rebecca Lent and to the Office of Information and Regulatory Affairs, Office of Management and Budget (OMB), Washington, DC 20503 (Attention: NOAA Desk Officer).

FOR FURTHER INFORMATION CONTACT: Maria Uitterhoeve, 301–713–2347; Pat Scida, 978–281–9208.

SUPPLEMENTARY INFORMATION:

Background

The Atlantic Tunas Convention Act (ATCA), codified at 16 U.S.C. 971 *et seq.*, provides for U.S. participation in the conduct of scientific research programs and regulation of fishing operations by the International Commission for the Conservation of Atlantic Tunas (ICCAT). Section 971g.(d)(2)(B) of ATCA provides that Federal regulations promulgated to implement ICCAT recommendations shall apply within the boundary of any state bordering on any convention area if the Secretary of Commerce determines that any such state has laws or regulations that are less restrictive than the Federal regulations or, if not less restrictive, are not effectively enforced.

Regulations implemented under the authority of ATCA governing the harvest of Atlantic highly migratory species by persons and vessels subject to U.S. jurisdiction presently appear at 50 CFR part 285. Effective July 1, 1999, these regulations will be replaced by consolidated regulations at 50 CFR part 635 (64 FR 29090, May 28, 1999). Specifically, regulations limiting the harvest of BFT and requiring reporting of BFT landings implement ICCAT recommendations regarding country catch quotas and catch reporting. In the case of the U.S. recreational fishery for young (pre-spawning) BFT, ICCAT has recommended that landings of fish 27 to 47 inches (69 to 119 cm) in fork length be limited to 8 percent of the country quota. BFT of this size are the target of a popular summertime recreational fishery off the mid-Atlantic and southern New England coasts, and the potential catch far exceeds the available quota. Consequently, NMFS must restrict harvest of BFT through annual quotas and trip limits and must monitor landings in real-time.

Automated Catch Reporting System

NMFS has set up an automated catch reporting system (ACRS), and regulations at 50 CFR 285.29(f) (consolidated at 50 CFR 635.5(c), effective July 1, 1999) require that anglers who land BFT call a toll-free number (1–888–USA-TUNA) to report the number and size of fish. NMFS also conducts dockside and telephone surveys of permitted anglers to estimate fishing effort and collect more detailed scientific information on catch. Recognizing that the states also have an interest in collecting information on the economically important fisheries for Atlantic highly migratory species, NMFS has cooperated with the states to minimize duplication of effort and reduce the reporting burden while ensuring that BFT catch information is collected as quickly as possible. In the event that NMFS determines a state reporting system to be equally effective as the ACRS, NMFS will notify participating anglers that compliance with the state system satisfies the reporting requirement of 50 CFR 285.29(f) (50 CFR 635.5(c) after June 30, 1999).

Maryland BFT Landing Tag Program

State regulations promulgated under Natural Resources Article § #4–2A–03 of the Annotated Code of Maryland (COMAR) regarding landing of BFT in Maryland are found at COMAR 08.02.05.23. An emergency regulation to be published in the *Maryland Register*, allows BFT to be landed in the State of Maryland only if consistent with the applicable fishing seasons, size limits and retention limits specified in the Code of Federal Regulations at 50 CFR part 285 (50 CFR part 635 after July 1, 1999). Further, the State regulation requires that, effective June 1, 1999, through November 27, 1999, all BFT landed in Maryland be landed in whole form and have a landing tag affixed before removal of the fish from the vessel. If the BFT is on board a vessel on a trailer, a landing tag must be affixed before such vessel is removed from the water. A landing tag can be obtained only from officially designated reporting stations and only after the angler completes a catch reporting card for each BFT.

The catch reporting and landing tag regulations of the State of Maryland are enforced by the Maryland Natural Resources Police. Violations of the Maryland BFT catch reporting

regulations are subject to a fine. Anglers may obtain further information on the Maryland BFT landing tag program and on the locations of reporting stations from Al Wesche of the Maryland Department of Natural Resources at 410–213–1531.

Determination of State Jurisdiction

NMFS has determined that the State of Maryland has implemented regulations for reporting BFT landings that are at least as restrictive as the Federal reporting requirements and are effectively enforced. Therefore, participants in the recreational fishery who land BFT in the State of Maryland are exempt from calling in their catch through the NMFS ACRS. Under State of Maryland regulations, recreational fishermen must report all BFT landings through the Maryland BFT landing tag program. This exemption applies only to ACRS catch reporting; all other Federal regulations for BFT (e.g., seasons, quotas, catch limits, permit requirements, survey participation) continue to apply within the boundary of the State of Maryland. Information on applicable Federal regulations may be obtained by calling 1–888–USA-TUNA or through the internet at: www.usatuna.com.

Classification

This action is taken under 50 CFR 285.29(f), and after June 30, 1999, will continue in effect under 50 CFR 635.5(c).

Notwithstanding any other provision of law, no person is required to respond to nor shall a person be subject to a penalty for failure to comply with a collection of information subject to the requirements of the Paperwork Reduction Act (PRA) unless that collection of information displays a currently valid OMB control number.

This rule involves a collection of information requirement subject to the PRA and approved by OMB under control number 0648–0328. The burden associated with Atlantic BFT catch reporting is estimated at 5 minutes per report, including the time for reviewing instructions, searching existing data sources, gathering and maintaining the data needed, and completing and reviewing the collection of information. Send comments regarding this burden estimate, or any other aspect of this data collection, including suggestions for reducing the burden, to NMFS and OMB (see **ADDRESSES**).

This final rule has been determined to be not significant for purposes of E.O. 12866.

The AA has determined that under 5 U.S.C. 553(b)(B) there is good cause to waive the requirement for prior notice and opportunity for public comment because delaying the final rule to provide for such procedures would be contrary to the public interest in that it would subject recreational fishermen landing BFT in Maryland to duplicative federal and state regulations. This determination of state jurisdiction relieves a restriction by exempting recreational anglers landing BFT in Maryland from the federal requirement to report BFT catch since they are now subject to an effective State reporting requirement that fulfills the same purpose. Under 5 U.S.C. 553(d)(1), because this action relieves a restriction, it is not subject to a 30-day delay in effective date.

Because prior notice and opportunity for public comment is not required for this action by 5 U.S.C. 553 or by any other law, under 5 U.S.C. 603 it is not subject to the analytical requirements of the Regulatory Flexibility Act. Accordingly, no regulatory flexibility analysis was prepared.

Dated: June 21, 1999.

Gary C. Matlock,

Acting Assistant Administrator for Fisheries, National Marine Fisheries Service.

[FR Doc. 99–16166 Filed 6–22–99; 9:10 am]

BILLING CODE 3510–22–F

DEPARTMENT OF COMMERCE

National Oceanic and Atmospheric Administration

50 CFR Part 648

[Docket No. 981106278–8336–02; I.D. 060999A]

RIN 0648–AL76

Fisheries of the Northeastern United States; Atlantic Mackerel, Squid, and Butterfish Fisheries; 1999 Specifications

AGENCY: National Marine Fisheries Service (NMFS), National Oceanic and Atmospheric Administration (NOAA), Commerce.

ACTION: Inseason adjustment of *Illex* squid annual specifications.

SUMMARY: NMFS issues this notification to announce that the Administrator, Northeast Region, NMFS (Regional Administrator), is adjusting the annual specifications for *Illex* squid (*Illex illecebrosus*), including allowable biological catch (ABC), initial optimum yield (IOY), domestic annual harvest (DAH) and domestic annual processing (DAP), from 19,000 metric tons (mt) to 22,800 mt. The regulations for the Atlantic mackerel, squid and butterfish fisheries require publication of this announcement to provide interested parties the opportunity to comment on the adjustments.

DATES: Effective June 25, 1999. Comments on this notification must be received by July 26, 1999.

ADDRESSES: Comments should be sent to Patricia A. Kurkul, Regional Administrator, NMFS, Northeast Regional Office, 1 Blackburn Drive, Gloucester, MA 01930. Mark on the outside of the envelope ''Comments on Adjustment of *Illex* Squid Annual Specifications.''

FOR FURTHER INFORMATION CONTACT: Peter Christopher, Fishery Management Specialist, at 978–281–9288.

SUPPLEMENTARY INFORMATION: Final 1999 initial specifications for the Atlantic mackerel, squid, and butterfish fisheries were published in the **Federal Register** at 64 FR 1139, January 8, 1999. The *Illex* squid specifications were established as follows: 24,000 mt maximum optimum yield (Max OY); 19,000 mt ABC, IOY, DAH and DAP; 0 mt joint venture processing (JVP); and 0 mt total allowable level of foreign fishing (TALFF).

The Mid-Atlantic Fishery Management Council (Council) submitted Amendment 8 to the Atlantic Mackerel, Squid, and Butterfish Fishery Management Plan (FMP) on October 6, 1998, to bring the FMP into accord with the Magnuson-Stevens Fishery Conservation Management Act as amended by the Sustainable Fisheries Act. The new overfishing definition for *Illex* squid in Amendment 8 included a target yield associated with 75 percent of the fishing mortality at maximum sustainable yield (F_{MSY}). The yield was calculated to be 18,000 mt in the Amendment. However, upon review of the new overfishing definition, the Northeast Fishery Science Center (Center) discovered an error in the calculation of the 18,000 mt target yield. The Center's review identified that the Council had calculated the 18,000 mt target yield as 75 percent of maximum sustainable yield, rather than 75 percent of F_{MSY}. Further, the overfishing definition had inadvertently cited the draft version of the 21st Stock Assessment Workshop stock assessment of *Illex*. The Center determined that the actual yield associated with F_{MSY} in the overfishing definition should be 22,800 mt.

Amendment 8 to the FMP and the associated overfishing definitions were approved on April 28, 1999. The Council chose not to lower the *Illex* squid specifications to the 18,000 mt target yield indicated in Amendment 8

so that the maximum amount of *Illex* squid could be harvested within the goals of the existing FMP. However, the Council, notified of the error in the determination of the 18,000 mt target yield in the Amendment, recommended at its April 29, 1999, meeting that the specifications for *Illex* squid fishery be adjusted to 22,800 mt to allow the maximum amount of harvest allowed by the amended FMP and the new overfishing definition.

The Council requested that NMFS process an emergency action ''...or any other action deemed necessary...'' to change the specifications. While an emergency action would not be appropriate, the regulations at § 648.21(e) for Atlantic mackerel, squid, and butterfish allow the Regional Administrator to process an inseason action to adjust the specifications. There is no justifiable reason to limit the industry to 19,000 mt since the target yield to prevent overfishing has been determined to be 22,800 mt. The 22,800 mt specifications would provide the industry with the maximum amount of harvest based on the overfishing definition for *Illex* squid. Therefore, 22,800 mt is specified as the allowed for ABC, IOY, DAH, and DAP. This action is warranted by the new overfishing definition for *Illex* squid. Max OY would remain at 24,000 mt, and JVP and TALFF would remain at 0 mt.

1999 Final Specifications

The following table contains the final initial specifications for the 1999 Atlantic mackerel, *Loligo* and *Illex* squids, and butterfish fisheries as recommended by the Council.

FINAL INITIAL ANNUAL SPECIFICATIONS FOR ATLANTIC MACKEREL, SQUID, AND BUTTERFISH FOR THE FISHING YEAR JANUARY 1 THROUGH DECEMBER 31, 1999.

[mt]

Specifications	Squid		Atlantic Mackerel	Butterfish
	Loligo	Illex		
Max OY	26,000	24,000	[1]N/A	16,000
ABC	21,000	22,800	383,000	7,200
IOY	21,000	22,800	[2]75,000	5,900
DAH	21,000	22,800	[3]75,000	5,900
DAP	21,000	22,800	50,000	5,900
JVP	0	0	10,000	0
TALFF	0	0	0	0

[1]Not applicable.
[2]OY may be increased during the year, but the total will not exceed 383,000 mt.
[3]Includes 15,000 mt of Atlantic mackerel recreational allocation.

Authority: 16 U.S.C. 1801 *et seq*.

Dated; June 21, 1999.

Bruce C. Morehead,

Acting Director, Office of Sustainable Fisheries, National Marine Fisheries Service.

[FR Doc. 99–16204 Filed 6–24–99; 8:45 am]

BILLING CODE 3510–22–F

Proposed Rules

Federal Register
Vol. 64, No. 122
Friday, June 25, 1999

This section of the FEDERAL REGISTER contains notices to the public of the proposed issuance of rules and regulations. The purpose of these notices is to give interested persons an opportunity to participate in the rule making prior to the adoption of the final rules.

DEPARTMENT OF AGRICULTURE

Animal and Plant Health Inspection Service

7 CFR Part 319

[Docket No. 99–020–1]

Mexican Hass Avocado Import Program

AGENCY: Animal and Plant Health Inspection Service, USDA.

ACTION: Proposed rule.

SUMMARY: We are proposing to amend our regulations governing the importation of Hass avocados from Mexico to require handlers and distributors to enter into compliance agreements with the Animal and Plant Health Inspection Service. We would also amend the stickering requirement for the avocados and add requirements regarding the repackaging of the avocados after their entry into the United States. These proposed amendments are necessary to ensure that distributors and handlers are familiar with the distribution restrictions and other requirements of the regulations and to strengthen the effectiveness of the marking requirements used to identify the avocados and allow them to be tracked back to their grove of origin. These proposed amendments would serve to reinforce the existing safeguards of the avocado import program.

DATES: We invite you to comment on this docket. We will consider all comments that we receive by August 24, 1999.

ADDRESSES: Please send your comment and three copies to: Docket No. 99–020–1, Regulatory Analysis and Development, PPD, APHIS, Suite 3C03, 4700 River Road Unit 118, Riverdale, MD 20737–1238. Please state that your comment refers to Docket No. 99–020–1.

You may read any comments that we receive on this docket in our reading room. The reading room is located in room 1141 of the USDA South Building, 14th Street and Independence Avenue, SW., Washington, DC. Normal reading room hours are 8 a.m. to 4:30 p.m., Monday through Friday, except holidays. to be sure someone is there to help you please call (202) 690–2817 before coming.

APHIS documents published in the **Federal Register**, and related information, including the names of organizations and individuals who have commented on APHIS rules, are available on the Internet at http://www.aphis.usda.gov/ppd/rad/webrepor.html.

FOR FURTHER INFORMATION CONTACT: Ms. Donna West, Import Specialist, Phytosanitary Issues Management Team, PPQ, APHIS, 4700 River Road Unit 140, Riverdale, MD 20737–1236; (301) 734–6799; e-mail: Donna.L.West@usda.gov.

SUPPLEMENTARY INFORMATION:

Background

The regulations in ''Subpart—Fruits and Vegetables'' (7 CFR 319.56 through 319.56–8, referred to below as the regulations) prohibit or restrict the importation of fruits and vegetables into the United States from certain parts of the world to prevent the introduction and dissemination of plant pests, including fruit flies, that are new to or not widely distributed within the United States.

The regulations in § 319.56–2ff allow fresh Hass avocado fruit grown in approved orchards in approved municipalities in Michoacan, Mexico, to be imported into certain areas of the United States subject to certain conditions. Those conditions, which include pest surveys and pest risk-reducing cultural practices, packinghouse procedures, inspection and shipping procedures, and restrictions on the time of year (November through February) that shipments may enter the United States, are designed to reduce the risk of pest introduction to a negligible level. Further, the regulations in § 319.56–2ff limit the distribution of the avocados to 19 northeastern States and the District of Columbia, where climatic conditions preclude the establishment in the United States of any of the exotic plant pests that may attack avocados in Michoacan. Mexico. In this document, we are proposing to make several changes to the regulations.

Compliance Agreements

The regulations in § 319.56–2ff became effective in March 1997. During the first shipping season (November 1997 through February 1998), we found that one distributor had shipped Mexican Hass avocados to Georgia, Iowa, Missouri, North Carolina, South Carolina, and Tennessee, none of which are among the 19 approved States. In the second shipping season (November 1998 through February 1999), we found that five other distributors had allowed Mexican Hass avocados to be shipped those same six States as well as to the non-approved States of Florida, Minnesota, Mississippi, Nebraska, and South Dakota.

In order to help prevent recurrences of such unauthorized shipments in future shipping seasons, we are proposing to amend the regulations to require all handlers and distributors of Mexican Hass avocados to enter into a compliance agreement with the Animal and Plant Health Inspection Service (APHIS). The compliance agreement would serve both as an educational tool to ensure that all handlers and distributors have been fully informed about the limitations that the regulations place on the movement of the avocados and as an enforcement tool that would provide a greater measure of accountability for handlers or distributors who may violate the distribution restrictions of the regulations. This proposed compliance agreement requirement would be added to the regulations in § 319.56–2ff as a new paragraph (k), ''Compliance agreements.''

Specifically, proposed paragraph (k)(1) would state that any person other than the person who received a permit to import the avocados (the permittee) who moves or distributes Mexican Hass avocados following their importation into the United States must enter into a compliance agreement with APHIS. In that compliance agreement, the person moving or distributing the avocados would have to acknowledge, and agree to observe, the restrictions found in § 319.56–2ff regarding the movement of the avocados in the United States. Those restrictions, a copy of which would be provided to the person entering into the compliance agreement, are found in § 319.56–2ff in paragraph (a), ''Shipping restrictions;'' paragraph (f), ''Ports;'' paragraph (g), ''Shipping areas;''

paragraph (h), ''Shipping requirements;'' and paragraph (i), ''Inspection;'' as well as in proposed new paragraph (j), ''Repackaging'' (which is explained later in this document) and proposed paragraph (k), ''Compliance agreements.''

By requiring handlers and distributors to sign a compliance agreement, we would be able to document that they have received a copy of the regulations and have had those regulations explained to them. This would effectively eliminate any uncertainty or misunderstanding that they may have regarding their responsibilities under the regulations. Paragraph (k)(1) would conclude by stating that compliance agreements forms are available free of charge, from local offices of Plant Protection and Quarantine, which are listed in local telephone directories.

Proposed paragraph (k)(2) would state that the permittee would have to ensure that any person to whom he or she released the avocados for movement or distribution (i.e., a second-party handler) has entered into a compliance agreement with APHIS. While the importers themselves must acknowledge the requirements of the regulations before they receive a permit to import Mexican Hass avocados, it is possible that a second-party handler might fail to fully familiarize himself or herself with the distribution limitations and other restrictions associated with the Avocados. We believe requiring permittees to confirm that the person to whom they are releasing the avocados for distribution has entered into a compliance agreement with APHIS would ensure that second-party handlers are made aware of their responsibilities under the regulations. This proposed requirement would also be made a condition of the permit that the permittee must obtain prior to importing Mexican Hass avocados, and failure to observe the conditions of a permit is grounds for its revocation. Therefore, paragraph (k)(2) would also state that APHIS may revoke an import permit for the remainder of the current shipping season if the permittee failed to confirm that the second-party handler had entered into a compliance agreement.

For the same reasons that we would address the transfer of avocados from the permittee to a second-party handler, as described in the previous paragraph, we are also proposing to require that any second-party or subsequent handler who releases the avocados to another person for movement or distribution must ensure that the person receiving the avocados has entered into a compliance agreement with APHIS. This proposed requirement would be stated in paragraph (k)(3). Again, the compliance agreement would ensure that persons receiving the avocados from second-party or subsequent handlers are made aware of their responsibilities under the regulations. Further, the compliance agreement would serve to establish a chain of custody that would indicate at what point this proposed compliance agreement requirement was disregarded. Because a compliance agreement would be required for persons moving or distributing the avocados, paragraph (k)(3) would also state that APHIS may revoke a second-party or subsequent handler's compliance agreement for the remainder of the current shipping season if that second-party or subsequent handler failed to confirm that the person to whom he or she released the avocados had entered into a compliance agreement.

Finally, in order to help prevent repeated violations of the proposed compliance agreement requirement, paragraph (k)(4) would provide that APHIS may deny an import permit application from, or refuse to enter into a compliance agreement with, a person who has had his or her import permit or compliance agreement revoked twice within any 5-year period. This would prevent permittees or handlers who repeatedly disregard or violate the compliance agreement requirement from receiving or moving shipments of Mexican Hass avocados.

Stickers

The regulations in § 319.56–2ff(c)(3)(vi) require, among other things, that prior to being packed in boxes at the packinghouse in Mexico, each avocado fruit must be labeled with a sticker that bears the Sanidad Vegetal registration number of the packinghouse. This requirement is intended to make it easier to identify Mexican-origin avocados at terminal markets and presents an additional obstacle to transshipment of the fruit to non-approved States.

It has come to our attention that some packinghouses in Mexico may be using the same sticker required by the regulations for ''program fruit'' (i.e., avocados that meet the requirements of § 319.56–2ff for export to the northeastern United States) on ''non-program fruit'' shipped to Canada or used for domestic consumption in Mexico. While using the sticker for non-program fruit is not currently prohibited by the regulations, we believe that such uses of the sticker dilute the effectiveness of the stickers as a tool for identifying Mexican avocados in the United States and for differentiating program fruit from non-program fruit that may have been smuggled into the United States.

Therefore, we are proposing to amend § 319.56–2ff(c)(3)(vi) to require that the stickers used for program fruit not only bear the Sanidad Vegetal registration number of the packinghouse, but that they also bear the letters ''M/US'' after that number, and that those stickers be used only for fruit produced in accordance with § 319.56–2ff for export to the United States. These proposed amendments to the stickering requirement would ensure that the stickers will serve their intended purpose of making it easier to identify Mexican-origin avocados at terminal markets and would further allow us to differentiate between program fruit and non-program fruit that may have been smuggled into the United States.

Repackaging

The regulations in § 319.56–2ff(c)(3)(vii) require that, at the packinghouse in Mexico, the avocados must be packed in clean, new boxes, and the boxes must be clearly marked with the identity of the grower, packinghouse, and exporter, and the statement ''Distribution limited to the following States: CT, DC, DE, IL, IN, KY, ME, MD, MA, MI, NH, NJ, NY, OH, PA, RI, VA, VT, WV, and WI.'' This requirement ensures that the avocados can be traced back to their grove of origin in the event that pests are detected at any time after the avocados are placed in boxes at the packinghouse.

We acknowledge that there may be instances where the avocados may have to be packed in new boxes after their entry into the United States due to damage to the original shipping box or some other legitimate reason. It is also possible that a person may attempt to conceal the origin of the avocados by repackaging them into unmarked boxes or removing the stickers that are required by § 319.56–2ff(c)(3)(vi). The regulations, however, currently do not address the removal of stickers or the repackaging of avocados after their arrival in the United States.

Therefore, we are proposing to add a new paragraph (j) to § 319.56–2ff that would clearly state that if any avocados are removed from their original shipping boxes and repackaged, the stickers may not be removed or obscured and the new boxes must be clearly marked with the same information that must be placed on the original boxes at the packinghouse. Adding these provisions to the regulations would help ensure these identifying measures would be

maintained in the event that repackaging became necessary, thus preserving the important information regarding the identity and origin of the avocados that those measures provide.

Executive Order 12866 and Regulatory Flexibility Act

This proposed rule has been reviewed under Executive Order 12866. The rule has been determined to be not significant for the purposes of Executive Order 12866 and, therefore, has not been reviewed by the Office of Management and Budget.

This proposed rule would amend our regulations governing the importation of Hass avocados from Mexico to require handlers and distributors to enter into compliance agreements with APHIS. This proposed rule would also amend the stickering requirement for the avocados and add requirements regarding the repackaging of the avocados after their entry into the United States. These proposed amendments would ensure that distributors and handlers are familiar with the distribution restrictions and other requirements of the regulations and would strengthen the effectiveness of the marking requirements used to identify the avocados and allow them to be traced back to their grove of origin.

During the first shipping season for Mexican Hass avocados (November 1997 through February 1998), Mexico exported 13.296 million pounds of fresh avocados to the northeastern United States (U.S. Department of Agriculture, Foreign Agricultural Service, GAIN Report No. MX8140, November 24, 1998). During the second shipping season (November 1998 through February 1999), Mexico exported approximately 22 million pounds of fresh avocados to the northeastern United States.

Although it was anticipated that the importation of fresh Hass avocados from Mexico into the northeastern United States would result in lower prices for consumers and losses for domestic avocado producers, there has, to date, been little or no price change. The average wholesale price for avocados in the approved 19 northeastern States and the District of Columbia before the first shipping season began in November 1997 was $1.47 per pound, while after the shipping season began, the average wholesale price was $1.60 per pound. For the non-approved States, the average wholesale prices were $1.46 before November 1997 and $1.57 after the first shipping season began. (The wholesale prices in the approved States are based on averages in Baltimore, Boston, Chicago, Detroit, New York, and Philadelphia; the wholesale prices for the non-approved States are based on averages in Atlanta, Dallas, Los Angeles, Miami, San Francisco, and Seattle.) There was no statistically significant difference between the wholesale prices in the approved States and the non-approved States before or after Mexican Hass avocados entered the domestic market. It should be noted that the average wholesale prices for fresh avocados in Mexico were only about $0.33 and $0.32 per pound in 1997 and 1998, respectively.

As discussed in the background section of this proposed rule, compliance agreements are available from APHIS free of charge and the stickering of individual avocados in Mexico is already required under the regulations. Therefore, the only aspect of this proposed rule that could be expected to result in additional costs for any U.S. entities, large or small, would be the proposed requirement for the marking of new boxes in cases where the avocados are repackaged after their entry into the United States.

According to industry sources, the cost of the current box marking and fruit stickering requirements of the regulations is approximately $0.06 per pound. This cost is borne at the Mexican production/export end of the Hass avocado export program. If 20 percent of all shipments had to be repackaged following their arrival in the United States due to damage to original shipping boxes or for other reasons, the proposed requirement for the marking of new boxes could result in additional costs to U.S. importers or distributors of approximately $160,000 to $264,000. This estimate was arrived at using 20 percent of the total volume of Mexican Hass avocados shipped to the northeastern United States during the two export seasons of 1997–1998 (13.296 million pounds × $0.06 × 0.2=$159,552) and 1998–1999 (22 million pounds × $0.06 ×0.2=$264,000). However, because the $0.06 figure used includes the costs of stickering as well as box marking, it is likely that the costs to U.S. importers or distributors of marking new boxes in the United States would actually be less than that estimate. Since, as noted above, the price spread between domestic and Mexican wholesale prices is so large, U.S. importers and distributors may be able to absorb any additional costs resulting from the proposed requirement for marking new boxes without passing those costs on to consumers.

Under these circumstances, the Administrator of the Animal and Plant Health Inspection Service has determined that this action would not have a significant economic impact on a substantial number of small entities.

Executive Order 12988

This proposed rule has been reviewed under Executive Order 12988, Civil Justice Reform. If this proposed rule is adopted: (1) All State and local laws and regulations that are inconsistent with this rule will be preempted; (2) no retroactive effect will be given to this rule; and (3) administrative proceedings will not be required before parties may file suit in court challenging this rule.

Paperwork Reduction Act

In accordance with section 3507(d) of the Paperwork Reduction Act of 1995 (44 U.S.C. 3501 *et seq.*), the information collection or recordkeeping requirements included in this proposed rule have been submitted for approval to the Office of Management and Budget (OMB). Please send written comments to the Office of Information and Regulatory Affairs, OMB, Attention: Desk Officer for APHIS, Washington, DC 20503. Please state that your comments refer to Docket No. 99–020–1. Please send a copy of your comments to: (1) Docket No. 99–020–1, Regulatory Analysis and Development, PPD, APHIS, suite 3C03, 4700 River Road Unit 118, Riverdale, MD 20737–1238, and (2) Clearance Officer, OCIO, USDA, room 404–W, 14th Street and Independence Avenue, SW., Washington, DC 20250. A comment to OMB is best assured of having its full effect if OMB receives it within 30 days of publication of this proposed rule.

Our regulations currently allow fresh Hass avocado fruit grown in approved orchards in Michoacan, Mexico, to be imported into the United States under certain conditions. In this document, we are proposing to amend our regulations governing the importation of Hass avocados from Mexico to require handlers and distributors to enter into compliance agreements with APHIS. We are also proposing to amend the existing stickering requirement for the avocados and to add requirements regarding the marking of new boxes when avocados are repackaged after their entry into the United States.

These proposed amendments would require the use of several information collection procedures, including a compliance agreement, enhanced product identification, and additional container marking requirements. We are asking OMB to approve our use of these information collections in connection with our efforts to ensure that fresh Hass avocados from Mexico pose a negligible risk of introducing exotic insect pests into the United States.

We are soliciting comments from the public (as well as affected agencies) concerning our proposed information collection and recordkeeping requirements. These comments will help us:

(1) Evaluate whether the proposed information collection is necessary for the proper performance of our agency's functions, including whether the information will have practical utility;

(2) Evaluate the accuracy of our estimate of the burden of the proposed information collection, including the validity of the methodology and assumptions used;

(3) Enhance the quality, utility, and clarity of the information to be collected; and

(4) Minimize the burden of the information collection on those who are to respond (such as through the use of appropriate automated, electronic, mechanical, or other technological collection techniques or other forms of information technology, e.g., permitting electronic submission of responses).

Estimate of burden: Public reporting burden for this collection of information is estimated to average 1.195 hours per response.

Respondents: Packinghouse owner/operators in Mexico and importers, shippers, distributors, and handlers of fresh Hass avocados imported into the United States.

Estimated annual number of respondents: 210.

Estimated annual number of responses per respondent: 1.195.

Estimated annual number of responses: 210.

Estimated total annual burden on respondents: 251 hours. (Due to rounding, the total annual burden hours may not equal the product of the annual number of responses multiplied by the average reporting burden per response.)

Copies of this information collection can be obtained from: Clearance Officer, OCIO, USDA, room 404–W, 14th Street and Independence Avenue, SW., Washington, DC 20250.

List of Subjects in 7 CFR Part 319

Bees, Coffee, Cotton, Fruits, Honey, Imports, Logs, Nursery Stock, Plant diseases and pests, Quarantine, Reporting and recordkeeping requirements, Rice, Vegetables.

Accordingly, we propose to amend 7 CFR part 319 as follows:

PART 319—FOREIGN QUARANTINE NOTICES

1. The authority citation for part 319 would continue to read as follows:

Authority: 7 U.S.C. 150dd, 150ee, 150ff, 151–167, 450, 2803, and 2809; 21 U.S.C. 136 and 136a; 7 CFR 2.22, 2.80, and 371.2(c).

2. In § 319.56–2ff, paragraph (c)(3)(vi) would be revised and new paragraphs (j) and (k) would be added to read as follows:

§ 319.56–ff Administrative instructions governing movement of Hass avocados from Mexico to the Northeastern United States.

* * * * *

(c) * * *

(3) * * *

(vi) Prior to being packed in boxes, each avocado fruit must be cleaned of all stems, leaves, and other portions of plants and labeled with a sticker that bears the Sanidad Vegetal registration number of the packinghouse followed by the letters ''M/US.'' The stickers may be used only for fruit produced in accordance with this section for export to the United States.

* * * * *

(j) *Repackaging.* If any avocados are removed from their original shipping boxes and repackaged, the stickers required by paragraph (c)(3)(vi) of this section may not be removed or obscured and the new boxes must be clearly marked with all the information required by paragraph (c)(3)(vii) of this section.

(k) *Compliance agreements.* (1) Any person other than the permittee (i.e., a second-party or subsequent handler) who moves or distributes the avocados following their importation into the United States must enter into a compliance agreement with APHIS. In the compliance agreement, the person must acknowledge, and agree to observe, the requirements of paragraph (a) and paragraphs (f) through (k) of this section. Compliance agreement forms are available, free of charge, from local offices of Plant Protection and Quarantine, which are listed in local telephone directories.

(2) Before transferring the avocados to any person (i.e., a second-party handler) for movement or distribution, the permittee must confirm that the second-party handler has entered into a compliance agreement with APHIS as required by paragraph (k)(1) of this section. If the permittee transfers the avocados to a second-party handler who has not entered into a compliance agreement, APHIS may revoke the permittee's import permit for the remainder of the current shipping season.

(3) Any second-party or subsequent handler who transfers the avocados to another person for movement or distribution must confirm that the person receiving the avocados has entered into a compliance agreement with APHIS as required by paragraph (k)(1) of this section. If the second-party or subsequent handler transfers the avocados to a person who has not entered into a compliance agreement, APHIS may revoke the handler's compliance agreement for the remainder of the current shipping season.

(4) *Action on repeat violators.* APHIS may deny an application for an import permit from, or refuse to enter into a compliance agreement with, any person who has had his or her import permit or compliance agreement revoked under paragraph (k)(2) or (k)(3) of this section twice within any 5-year period.

Done in Washington, DC, this 21st day of June 1999.

Joan M. Arnoldi,

Acting Administrator, Animal and Plant Health Inspection Service.

[FR Doc. 99–16173 Filed 6–24–99; 8:45 am]

BILLING CODE 3410–34–M

DEPARTMENT OF AGRICULTURE

Agricultural Marketing Service

7 CFR Part 920

[Docket No. FV98–920–4 PR]

Kiwifruit Grown in California; Changes in Minimum Size, Pack, Container, and Inspection Requirements

AGENCY: Agricultural Marketing Service, USDA.

ACTION: Proposed rule.

SUMMARY: This rule invites comments on proposed changes to the minimum size, pack, container, and inspection requirements prescribed under the California kiwifruit marketing order. The marketing order regulates the handling of kiwifruit grown in California and is administered locally by the Kiwifruit Administrative Committee (Committee). This rule would specify minimum size requirements for all kiwifruit as a maximum of 55 pieces of fruit in an 8-pound sample regardless of pack style; require that individual consumer packages placed directly on a pallet be stamped with the applicable inspection lot number; and make minor changes to clarify pack and container marking requirements for several containers. In addition, this rule proposes to continue, for the 1999–2000 season, the suspension of minimum net weight requirements for kiwifruit tray packs scheduled to expire at the end of the 1998–1999 season. Also, proposed to be continued for the 1999–2000 season is

the suspension of the requirement that fruit must be reinspected if it has not been shipped by specified dates. These changes would clarify the minimum size, pack, and container requirements, and are expected to reduce handler packing costs, increase producer returns, and enable handlers to compete more effectively in the marketplace.

DATES: Comments must be received by July 15, 1999.

ADDRESSES: Interested persons are invited to submit written comments concerning this proposal. Comments must be sent to the Docket Clerk, Fruit and Vegetable Programs, AMS, USDA, room 2525–S, PO. Box 96456, Washington, DC 20090–6456; Fax: (202) 720–5698; or E-mail: moab.docketclerk@usda.gov. All comments should reference the docket number and the date and page number of this issue of the **Federal Register** and will be made available for public inspection in the Office of the Docket Clerk during regular business hours.

FOR FURTHER INFORMATION CONTACT: Rose M. Aguayo, Marketing Specialist, California Marketing Field Office, Marketing Order Administration Branch, F&V, AMS, USDA, 2202 Monterey Street, suite 102B, Fresno, California 93721; telephone: (559) 487–5901, Fax: (559) 487–5906; or George Kelhart, Technical Advisor, Marketing Order Administration Branch, Fruit and Vegetable Programs, AMS, USDA, room 2525–S, PO. Box 96456, Washington, DC 20090–6456; telephone: (202) 720–2491, Fax: (202) 720–5698. Small businesses may request information on compliance with this regulation or obtain a guide on complying with fruit, vegetable, and speciality crop marketing agreements and orders by contacting Jay Guerber, Marketing Order Administration Branch, Fruit and Vegetable Programs, AMS, USDA, PO. Box 96456, room 2525–S, Washington, DC 20090–6456; telephone: (202) 720–2491, Fax: (202) 720–5698, or E-mail Jay.Guerber@usda.gov. You may view the marketing agreement and order small business compliance guide at the following web site: http://www.ams.usda.gov/fv/moab.html.

SUPPLEMENTARY INFORMATION: This proposal is issued under Marketing Order No. 920, as amended (7 CFR part 920), regulating the handling of kiwifruit grown in California, hereinafter referred to as the ''order.'' The order is effective under the Agricultural Marketing Agreement Act of 1937, as amended (7 U.S.C. 601–674), hereinafter referred to as the ''Act.''

The Department of Agriculture (Department) is issuing this proposed rule in conformance with Executive Order 12866.

This proposal has been reviewed under Executive Order 12988, Civil Justice Reform. This rule is not intended to have retroactive effect. This proposal will not preempt any State or local laws, regulations, or policies, unless they present an irreconcilable conflict with this rule.

The Act provides that administrative proceedings must be exhausted before parties may file suit in court. Under section 608c(15)(A) of the Act, any handler subject to an order may file with the Secretary a petition stating that the order, any provision of the order, or any obligation imposed in connection with the order is not in accordance with law and request a modification of the order or to be exempted therefrom. A handler is afforded the opportunity for a hearing on the petition. After the hearing the Secretary would rule on the petition. The Act provides that the district court of the United States in any district in which the handler is an inhabitant, or has his or her principal place of business, has jurisdiction to review the Secretary's ruling on the petition, provided an action is filed not later than 20 days after the date of the entry of the ruling.

This proposal invites comments on changes to minimum size, pack, container, and inspection requirements prescribed under the California kiwifruit marketing order. The marketing order regulates the handling of kiwifruit grown in California and is administered locally by the Committee.

This rule would specify the minimum size requirements for all kiwifruit as a maximum of 55 pieces of fruit in an 8-pound sample regardless of pack style; require that individual consumer packages placed directly on a pallet be stamped with the applicable inspection lot number; and make minor changes to clarify pack and container marking requirements for several containers.

In addition, this rule proposes to continue, for the 1999–2000 season, the suspension of the minimum net weight requirements in § 920.302 (a)(4)(iii) for kiwifruit packed in containers with cell compartments, cardboard fillers, or molded trays scheduled to expire at the end of the 1998–1999 season. This suspension action was implemented by an interim final rule published last September (63 FR 46861; September 3, 1998). No comments were received pursuant to the request for comments in the interim final rule. A final rule published last August suspended the requirement in § 920.155 that fruit must be reinspected if it has not been shipped by specified dates for the 1998–1999 season (63 FR 41390 August 4, 1998). This rule also proposes to continue the suspension of this requirement for the 1999–2000 season. The proposed changes were unanimously recommended by the Committee. These changes would clarify the minimum size, pack, and container requirements, and are expected to reduce handler packing costs, increase producer returns, and enable handlers to compete more effectively in the marketplace.

The interim final rule published last September also increased the size variation tolerance, from 10 percent, by count, in any one container, to 25 percent, by count, for Size 42 kiwifruit, and the maximum number of fruit per 8-pound sample for Sizes 42, 39, 36, 33, and 30 of kiwifruit packed in bags, volume fill, or bulk containers for the 1998–1999 and future seasons. No changes to these provisions are proposed in this action.

In early November 1998, the Department determined that suspending the minimum net weight requirements as specified in § 920.302(a)(4)(iii) without redefining the size designation definition in § 920.302 (b)(2) had inadvertently limited application of the minimum size requirements to volume fill packs.

The Committee met on November 19, 1998, and clarified that its original intent had been to maintain the minimum size requirement on all kiwifruit regardless of pack style. The Committee discussed changing the regulatory language so that minimum size would apply to all pack styles for the remainder of the 1998–1999 season, but concluded that it would be unfair to growers and handlers to change this requirement in mid-season. The Committee believed that orderly marketing would continue as harvest was nearly completed at the time of the November 1998 meeting and because a small amount of minimum size kiwifruit had been packed in trays.

The Committee met again on January 13, 1999, to discuss industry issues and to make preliminary recommendations for the 1999–2000 season. The Committee concluded that the recommended changes made for the 1998–1999 season had benefitted the industry. Both small and large handlers were able to reduce packing costs and compete more effectively in the marketplace because of the relaxations made to the requirements.

The Committee made the following preliminary recommendations for the 1999–2000 season: (1) Specify that minimum size requirements apply to all kiwifruit regardless of pack style and define Size 45 in terms of weight and

not pack requirements; (2) make minor changes to clarify pack and container marking requirements for several containers; (3) continue the suspension of the requirement that fruit must be reinspected if it has not been shipped by specified dates for the 1999–2000 season; and (4) continue the suspension of the minimum net weight requirements for kiwifruit packed in containers with cell compartments, cardboard fillers, or molded trays for the 1999–2000 season.

Later in January, the kiwifruit industry held meetings in Northern and Southern California to further study the minimum size issue. Studies showed that while Size 45 fruit filled Size 45 cell cups well during the 1998–1999 season, the fruit packed would not have met the suspended minimum net weight requirement of 6.5 pounds because of an outdated cup size used in the Size 45 tray. A Size 45 tray of kiwifruit weighing a minimum of 6.5 pounds is equivalent to a maximum of 55 pieces of fruit in an 8-pound sample. Based on these findings, the Committee determined that the minimum net weight requirements for Size 45 should be studied further.

The Committee met on February 25, 1999, and unanimously recommended the following changes and clarifications for the 1999–2000 season: (1) Specify that the minimum size requirements be defined as a maximum of 55 pieces of fruit in an 8-pound sample and that the minimum size requirements should apply to all kiwifruit regardless of pack style; (2) require that individual consumer packages placed directly on a pallet be stamped with the applicable inspection lot number; (3) make minor changes to clarify pack and container marking requirements for several containers; (4) continue the suspension of the minimum net weight requirements for kiwifruit packed in containers with cell compartments, cardboard fillers, or molded trays for the 1999–2000 season; and (5) continue the suspension of the requirement that fruit must be reinspected if it has not been shipped by specified dates for the 1999–2000 season. The Committee further recommended that all rules and regulation changes begin as soon as possible to enable handlers to make operational decisions in time for the 1999–2000 harvest and shipping season.

New Proposed Changes for the 1999–2000 Season

Clarification of the Minimum Size Requirements

Under the terms of the order, fresh market shipments of kiwifruit grown in California are required to be inspected and meet grade, size, maturity, pack, and container requirements. Section 920.52 authorizes the establishment of minimum size, pack, and container requirements. Section 920.302(a)(2) of the order's rules and regulations outlines the minimum size requirements for fresh shipments of California kiwifruit and provides that such kiwifruit shall be at least a minimum Size 45.

Section 920.302(a)(4)(iii) specifies minimum net weight requirements for fruit of various sizes packed in containers with cell compartments, cardboard fillers, or molded trays.

Section 920.302(b)(2) of the order's rules and regulations defines size designation to mean the same as defined in the table in paragraph (a)(4)(iii) of this section.

As previously mentioned, the Committee unanimously recommended suspending the minimum net weight requirements specified in § 920.302(a)(4)(iii) for the 1998–1999 season. This recommendation was implemented through an interim final rule published September 3, 1998 (63 FR 46861).

In early November 1998, the Department determined that suspending § 920.302(a)(4)(iii) without redefining the size designation definition in § 920.302(b)(2) had inadvertently limited application of the minimum size requirements to volume fill packs.

The Committee members attended a meeting in November 1998 and again in January 1999 wherein they clarified their initial intent, and set preliminary recommendations for the 1999–2000 season.

The Committee met on February 25, 1999, unanimously recommended that kiwifruit be at least a minimum Size 45, and that Size 45 be defined in terms of weight and not pack requirements. Size 45 was defined as a maximum of 55 pieces of fruit in an 8-pound sample. This recommendation reflects the Committee's original intent to apply uniform minimum size requirements to all kiwifruit regardless of pack style. To further clarify its intent, the Committee recommended adding the size definition to the size requirements in § 920.302(a)(2), deleting the size designation definition in § 920.302(b)(2), and defining Size 45 in terms of weight and not pack.

The Committee considered establishing a count of 58 or 59 pieces of slightly smaller fruit for the Size 45 trays, but concluded that the count should remain a maximum of 55 pieces of fruit per 8-pound sample because the current minimum size continues to prevent shipments of low-quality, undersized fruit, and because repacking problems during the 1998–1999 season resulted from an outdated cup size in the Size 45 tray and not from the current minimum size.

Over the years, the size designation for Size 45 has changed, but the tray inserts for this size fruit have not changed. In 1989, the size designation for Size 45 was changed to 57 pieces of fruit per 8-pound sample and remained there until 1994, when Size 45 became the minimum size and was defined as 55 pieces of fruit per 8-pound sample.

Kiwifruit was not packed in Size 45 trays during the three seasons preceding the 1998–1999 season as it was not profitable for growers. A small amount of kiwifruit was packed during the 1998–1999 season. The Committee believes the molded trays utilized during the 1998–1999 season were manufactured prior to 1994, that the cell cups of these molded trays were designed to fit smaller fruit, and that the size of the cups contributed to the packing problems associated with Size 45 trays during the 1998–1999 season.

Tray manufacturers attending Committee meetings in January and February 1999 expressed interest in working with the industry in developing molded tray inserts with slightly larger cell cups for Size 45 trays. These slightly larger cell cups would allow slightly larger fruit to be packed and thus enable the minimum size requirements to be met.

As a result, the Committee unanimously recommended that the minimum size for all pack styles be established as a maximum of 55 pieces of fruit in an 8-pound sample. These changes would not impact the kiwifruit import regulation implemented under section 8e of the Act, because this recommendation would only clarify that the minimum size requirements apply to all shipments.

The Committee further recommended that all rules and regulation changes begin as soon as possible to enable handlers to make operational decisions in time for the 1999–2000 harvest and shipping season.

Lot Stamp Requirement

Section 920.303 of the order's rules and regulations outlines container marking requirements for fresh shipments of California kiwifruit.

Section 920.303(d) requires all exposed or outside containers of kiwifruit, but not less than 75 percent of the total containers on a pallet, to be plainly marked with the lot stamp number corresponding to the lot inspection conducted by an authorized

inspector. Individual consumer packages and containers that are being directly loaded into a vehicle for export shipment under the supervision of the Federal or Federal-State Inspection Service are not subject to these requirements.

Prior to the 1998–1999 season, handlers did not place individual consumer packages directly on pallets for shipping. Individual consumer packages were placed in master containers and the master containers bore the container marking requirements.

During the 1998–1999 season, new individual consumer packages that interlock and fit on a pallet were utilized. These individual consumer packages are stacked six packages by six packages on a pallet resulting in 36 individual consumer packages per layer. Pallets are normally stacked 8–10 layers high. The Committee determined that this style of container would not meet the current marking requirements of not less than 75 percent of the total containers on a pallet being plainly marked with the lot stamp number. Due to the size and configuration of the interlocking individual consumer packages, approximately 57 percent of the individual consumer packages would be marked if all exposed or outside containers are marked with the lot stamp number.

Therefore, when the Committee met on February 25, 1999, they unanimously recommended adding language to § 920.303(d) that would require individual consumer packages placed directly on a pallet to have all exposed containers plainly marked with the lot stamp number corresponding to the lot inspection conducted by an authorized inspector or that a total of four placards be applied to the pallet of kiwifruit. The Committee believes that relaxing the requirement to have all exposed or outside containers and at least 75 percent of the containers on the pallet marked with the lot stamp number, would allow handlers to ship individual consumer packages without incurring the additional costs of marking containers that are not exposed, and slowing down the packing line to mark the containers.

Changes to Clarify Pack and Container Marking Requirements

Section 920.303 of the order's rules and regulations outlines container marking requirements for fresh shipments of California kiwifruit.

Section 920.303(c)(3) establishes how the quantity shall be marked on bulk bins and requires the quantity to be indicated in terms of the size designation and net weight; or in terms of the size designation, net weight, and count.

Section 920.303(c)(5) establishes how the quantity shall be marked on individual consumer packages and requires that the quantity shall be indicated in terms of either net weight or count (or both) for individual consumer packages. It further requires that if count is used, it must be accompanied by the size designation.

At the February 25, 1999, meeting, the Committee recommended the following changes to pack requirements in §§ 920.302(a)(4)(ii) and (iv): (1) Change language in the first table of § 920.302(a)(4)(ii) as follows: Change ''Sizes'' to ''Count,'' change ''30 or larger'' to ''30 or less,'' and change ''39 or smaller'' to ''39 or more''; (2) add language to § 920.302(a)(4)(ii) to exclude individual consumer packages from the list of containers that utilize the size variation tolerance table for kiwifruit packed in containers with cell compartments, cardboard fillers, or molded trays; (3) change language in the second table of § 920.302(a)(4)(ii) from ''Sizes'' to ''Size Designation''; (4) change language in § 920.302(a)(4)(ii) to add individual consumer packages to the list of containers which specifies size variation tolerances for kiwifruit packed in bags, volume fill, or bulk containers; and (5) change language in § 920.302(a)(4)(iv) by adding ''individual consumer packages'' to the list of containers in the table specifying the numerical size and maximum number of fruit per 8-pound sample; delete the word ''numerical'' when describing size; and delete the words ''Column 1,'' ''Column 2,'' and ''Numerical Count'' from the size designation table in § 920.302(a)(4)(iv) as they are not necessary.

These changes would: (1) Reflect current industry practices; (2) clarify that the size variation tolerances which are applied to fruit packed in volume fill containers are also applied to individual consumer packages; (3) clarify that the size designation chart is utilized to determine the maximum number of fruit per 8-pound sample for individual consumer packages; and (4) delete unnecessary language.

The Committee also recommended the following changes to container requirements in §§ 920.303(c)(3) and (5) as follows: (1) Change language in § 920.303(c)(3) by adding ''individual consumer packages not within a master container'' to the list of containers in the size designation table specifying the size and maximum number of fruit per 8-pound sample; (2) delete the word ''bins'' and replace it with ''containers''; (3) delete the words ''net weight'' as they are not necessary; and (4) change language in § 920.302(a)(5) by adding ''within a master container'' after individual consumer packages.

These changes would ensure that marking requirements are clearly defined for individual consumer packages placed directly on a pallet as well as those packed within a master container.

Continuation of 1998–1999 Season Suspended Actions for the 1999–2000 Season

Continued Suspension of Minimum Net Weight Requirements for Trays

Section 920.302(a)(4) of the order's rules and regulations outlines pack requirements for fresh shipments of California kiwifruit.

Section 920.302(a)(4)(iii) specifies minimum net weight requirements for fruit of various sizes packed in containers with cell compartments, cardboard fillers, or molded trays.

Prior to the 1989–1990 season, there were no minimum tray weight requirements although 73.5 percent of the crop was packed in trays. During the 1989–1990 season, minimum tray weights were mandated, as there were many new packers involved in the kiwifruit packing process and stricter regulations were viewed as necessary to provide uniform container weights for each size. However, since that season the proportion of the crop packed in trays has steadily declined.

During the 1997–1998 season, only 15.5 percent of the crop was packed into molded trays and less than 1 percent of this fruit was rejected for failure to meet minimum tray weights. As a consequence, the Committee believed that minimum tray weight requirements might no longer be necessary to maintain uniformity in the marketplace.

Prior to the 1998–1999 season handlers were required to meet the minimum net weight requirements as shown in the following chart:

Count designation of fruit	Minimum net weight of fruit (Pounds)
34 or larger	7.5
35 to 37	7.25
38 to 40	6.875
41 to 43	6.75
44 and smaller	6.5

The Committee met on July 8, 1998, and unanimously recommended suspension of the minimum net weight requirements for kiwifruit packed in cell compartments, cardboard fillers, or molded trays for the 1998–1999 season.

Section 920.302(a)(4)(iii) was suspended for the 1998–1999 season by an interim final rule published September 3, 1998 (63 FR 14861).

As previously mentioned, both small and large handlers were able to reduce packing costs and to compete more effectively in the market during the 1998-1999 season because of the relaxation in packing requirements. The industry continued to pack well filled trays without having to spend the extra time weighing them. There was no reduction in the uniform appearance of fruit packed into trays.

Therefore, when the Committee met on January 13, 1999, to consider its preliminary recommendations for the season, it concluded that minimum net weight requirements for trays should continue to be suspended for the 1999–2000 season.

The Committee met on February 25, 1999, and unanimously recommended continuing the suspension of § 920.302(a)(4)(iii) for the 1999–2000 season. The 1999–2000 season ends July 31, 2000. The Committee plans to further evaluate the benefits during the 1999–2000 season.

Continued Suspension of Reinspection Requirement

Section 920.55 of the order requires that prior to handling any variety of California kiwifruit, such kiwifruit shall be inspected by the Federal or Federal-State Inspection Service (inspection service) and certified as meeting the applicable grade, size, quality, or maturity requirements in effect pursuant to § 920.52 or § 920.53.

Section 920.55(b) provides authority for the establishment, through the order's rules and regulations, of a period prior to shipment during which inspections must be performed.

Prior to its suspension for 1998–1999 season, § 920.155 of the order's rules and regulations specified that the certification of grade, size, quality, and maturity of kiwifruit pursuant to § 920.52 or § 920.53 during each fiscal year is valid until December 31 of such year or 21 days from the date of inspection, whichever is later. Any inspected kiwifruit to be shipped after the certification period lapses was required to be reinspected and recertified before shipment.

Section 920.155 was suspended for the 1998–1999 season by a final rule published August 1, 1998 (63 FR 41390). The Committee recommended this suspension to lessen the expenses upon the many kiwifruit growers who had either lost money or merely recovered their production costs in recent years. It concluded that the cost of reinspecting kiwifruit was too high to justify requiring it in view of the limited benefit reinspection provides. The Committee also believed it was no longer necessary to have fruit reinspected to provide consumers with a high quality product because storage and handling operations had improved in the industry.

During the 1998–1999 season, handlers voluntarily checked stored fruit prior to shipment to ensure that the condition of the fruit had not deteriorated. This enabled handlers to ship quality kiwifruit during the 1998–1999 season without the necessity for reinspection and recertification and the costs associated with such requirements. The Committee had estimated that handlers would save $50,000 by conducting their own reinspection during the 1998–1999 season.

At the February 25, 1999, meeting, the Committee unanimously recommended suspending § 920.155 for the 1999–2000 season. The Committee still believes that handlers saved $50,000 by conducting their own reinspection during the 1998–1999 season even though the marketed crop was less than projected, more fruit was in-line inspected than projected, and shipments had started later during the 1998–1999 season than anticipated.

Although freezing temperatures and winds during the spring may reduce the size of the 1999–2000 crop, the Committee believes the industry would continue to benefit from conducting its own reinspection.

The Committee would like to evaluate this suspension one more season before making a decision to permanently remove this requirement from the rules and regulations. Thus, the Committee unanimously recommended suspending § 920.155 for the 1999–2000 season. The 1999–2000 season ends July 31, 2000.

Maintaining Current Regulatory Changes

Maintaining the Current Size Variation Tolerance for Size 42 Kiwifruit

Section 920.302(a)(4) of the order's rules and regulations outlines pack requirements for fresh shipments of California kiwifruit.

Section 920.302(a)(4)(ii) specifies size variation ranges in terms of fruit diameter for each size of kiwifruit and size variation tolerances.

Section 920.302(a)(4)(ii) was revised by an interim final rule published September 3, 1998 (63 FR 46861) to include a provision to increase the size variation tolerance for Size 42 kiwifruit from 10 percent, by count, to 25 percent, by count.

During the 1998–1999 season a significantly smaller amount of kiwifruit was packed into the 40 series sizes than anticipated. Only 7 percent of the fruit was packed into Size 42 containers, and only 15.3 percent was packed into Size 42 and 45 containers. This is significantly less than the previous two years when 35 percent of the fruit was packed into the 40 series sizes.

In addition, size variation was not a problem for Size 42 fruit during the 1998–1999 season, as the majority of the fruit was round and short and not a mixture of round and flat fruit. A typical crop has a mixture of round and flat fruit. A mixture of round and flat fruit is difficult to pack and slows down the packing line.

The Committee believes that maintaining the increased size variation tolerance for Size 42 kiwifruit for the 1999–2000 season would continue to benefit the industry by easing the packing burden and reducing costs, while maintaining uniform looking boxes of fruit desired by customers.

Maintaining the Current Maximum Number of Fruit per 8-Pound Sample for Kiwifruit Packed in Bags, Volume Fill, or Bulk Containers

Section 920.302(a)(4) of the order's rules and regulations outlines pack requirements for fresh shipments of California kiwifruit.

Section 920.302(a)(4)(iv) establishes a maximum number of fruit per 8-pound sample for each numerical count size designation for fruit packed in bags, volume fill, or bulk containers.

Section 920.302(a)(4)(iv) was revised by an interim final rule published September 3, 1998 (63 FR 46861) to include a provision that increased the maximum number of fruit per 8-pound sample for Sizes 42 through 30. Size 42 fruit is smaller than Size 30 fruit. The size designation chart below depicts these changes:

Size designation	Maximum number of fruit Per 8 pound sample
21	22
25	27
27/28	30
30	33
33	36
36	42
39	48
42	53
45	55

Currently, under the rules and regulations, kiwifruit packed in bags,

volume fill, or bulk containers, must not exceed the maximum number of fruit per an 8-pound sample for each size designation.

Under the current regulations, handlers are better able to meet the needs of buyers, because kiwifruit sells by the piece, and buyers desire as much fruit in each container as the container can comfortably hold. California handlers are applying weight standards that are similar to those used by importers, thereby lessening confusion in the marketplace and facilitating the marketing of California kiwifruit.

Initial Regulatory Flexibility Analysis

Pursuant to requirements set forth in the Regulatory Flexibility Act (RFA), the Agricultural Marketing Service (AMS) has considered the economic impact of this action on small entities. Accordingly, AMS has prepared this initial regulatory flexibility analysis.

The purpose of the RFA is to fit regulatory actions to the scale of business subject to such actions in order that small businesses will not be unduly or disproportionately burdened. Marketing orders issued pursuant to the Act, and the rules issued thereunder, are unique in that they are brought about through group action of essentially small entities acting on their own behalf. Thus, both statutes have small entity orientation and compatibility.

There are approximately 60 handlers of California kiwifruit subject to regulation under the marketing order and approximately 450 producers in the production area. Small agricultural producers are defined by the Small Business Administration (13 CFR 121.601) as those whose annual receipts are less than $500,000, and small agricultural service firms are defined as those whose annual receipts are less than $5,000,000. One of the 60 handlers subject to regulation has annual kiwifruit receipts of at least $5,000,000. This figure excludes receipts from any other sources. The remaining 59 handlers have annual receipts less than $5,000,000, excluding receipts from other sources. In addition, 10 of the 450 producers subject to regulation have annual sales of at least $500,000, excluding receipts from any other sources. The remaining 440 producers have annual sales less than $500,000, excluding receipts from any other sources. Therefore, a majority of the kiwifruit handlers and producers may be classified as small entities.

This proposal invites comments on changes to minimum size, pack, container, and inspection requirements prescribed under the California kiwifruit marketing order. The marketing order regulates the handling of kiwifruit grown in California and is administered locally by the Committee.

This rule would specify the minimum size requirements for all kiwifruit as a maximum of 55 pieces of fruit in an 8-pound sample regardless of pack style; require that individual consumer packages placed directly on a pallet be stamped with the applicable inspection lot number; and make minor changes to clarify pack and container marking requirements for several containers.

In addition, this rule proposes to continue, for the 1999–2000 season, the suspension of the minimum net weight requirements in § 920.302(a)(4)(iii) for kiwifruit packed in containers with cell compartments, cardboard fillers, or molded trays scheduled to expire at the end of the 1998–1999 season. This suspension action was implemented by an interim final rule published last September (63 FR 46861; September 3, 1998). A final rule published last August suspended, for the 1998–1999 season, the requirement in § 920.155 that fruit must be reinspected if it has not been shipped by specified dates (63 FR 41390; August 4, 1998). This rule also proposes to continue the suspension of this requirement for the 1999–2000 season.

The proposed changes were unanimously recommended by the Committee. These changes would clarify the minimum size, pack, and container requirements, and are expected to reduce handler packing costs, increase producer returns, and enable handlers to compete more effectively in the marketplace.

The interim final rule published last September also increased the size variation tolerance for Size 42 kiwifruit and the maximum number of fruit for the 8-pound sample for the 1998–1999 and future seasons. No changes to these provisions are proposed in this action.

In early November 1998, the Department determined that suspending the minimum net weight requirements as specified in § 920.302(a)(4)(iii) without redefining the size designation definition in § 920.302(b)(2) had inadvertently limited application of the minimum size requirements to volume fill packs.

The Committee met on November 19, 1998, and clarified that the intent of its July 8, 1998, recommendation had been to maintain the minimum size requirement on all kiwifruit regardless of pack style. The Committee discussed changing the regulatory language so that minimum size would apply to all pack styles for the remainder of the 1998–1999 season, but concluded that it would be unfair to growers and handlers to change this requirement in mid-season. The Committee believed that orderly marketing would continue as harvest was nearly completed at the time of the November 1998 meeting and because a small amount of minimum size kiwifruit had been packed in trays.

The Committee met again on January 13, 1999, to discuss industry issues and to make preliminary recommendations for the 1999–2000 season. The Committee concluded that the recommended changes made for the season had benefitted the industry. Both small and large handlers were able to reduce packing costs and compete more effectively in the marketplace in the 1998–1999 season because of the relaxations made to the requirements.

The Committee made the following preliminary recommendations for the 1999–2000 season: (1) Specify that minimum size requirements apply to all kiwifruit regardless of pack style and define Size 45 in terms of weight and not pack requirements; (2) make minor changes to clarify pack and container marking requirements for several containers; (3) continue the suspension of the requirement that fruit must be reinspected if it has not been shipped by specified dates for the 1999–2000 season; and (4) continue the suspension of the minimum net weight requirements for kiwifruit packed in containers with cell compartments, cardboard fillers, or molded trays for the 1999–2000 season.

Later in January the kiwifruit industry held meetings in Northern and Southern California to further study the minimum size issue. Studies showed that while Size 45 fruit filled Size 45 cell cups well during the 1998–1999 season, the fruit would not have met the suspended minimum net weight requirement of 6.5 pounds because of an outdated cup size used in the Size 45 tray. A Size 45 tray of kiwifruit weighing a minimum of 6.5 pounds is equivalent to a maximum of 55 pieces of fruit in an 8-pound sample. Based on these findings, the Committee determined that the minimum net weight requirements for Size 45 should be further evaluated.

The Committee met on February 25, 1999, and unanimously recommended the following changes and clarifications for the 1999–2000 season: (1) Specify that the minimum size requirements be defined as a maximum of 55 pieces of fruit in an 8-pound sample and that the minimum size requirements should apply to all kiwifruit regardless of pack style; (2) require that individual consumer packages placed directly on a pallet be stamped with the applicable inspection lot number; (3) make minor changes to clarify pack and container

marking requirements for several containers; (4) continue the suspension of the minimum net weight requirements for kiwifruit packed in containers with cell compartments, cardboard fillers, or molded trays for the 1999–2000 season; and (5) continue the suspension of the requirement that fruit must be reinspected if it has not been shipped by specified dates for the 1999–2000 season. The Committee further recommended that all rules and regulation changes begin as soon as possible to enable handlers to make operational decisions in time for the 1999–2000 harvest and shipping season.

New Proposed Changes for the 1999–2000 Season

Clarification of the Minimum Size Requirement

Under the terms of the order, fresh market shipments of kiwifruit grown in California are required to be inspected and meet grade, size, maturity, pack, and container requirements. Section 920.52 authorizes the establishment of minimum size, pack, and container requirements. Section 920.302(a)(2) of the order's rules and regulations outlines the minimum size requirements for fresh shipments of California kiwifruit and provides that such kiwifruit shall be at least a minimum Size 45.

Section 920.302(a)(4)(iii) specifies minimum net weight requirements for fruit of various sizes packed in containers with cell compartments, cardboard fillers, or molded trays.

Section 920.302(b)(2) of the order's rules and regulations defines size designation to mean the same as defined in the table in paragraph (a)(4)(iii) of this section.

Prior to the 1998–1999 season, the minimum size for kiwifruit was defined as a maximum of 55 pieces of fruit in an 8-pound sample regardless of pack style. As previously mentioned, a change of pack requirements recommended by the Committee last summer and implemented by an interim final rule published on September 3, 1998 (63 FR 46861) unintentionally limited application of minimum size requirements to volume fill containers. The Committee members attended a meeting in November 1998 and again in January 1999 wherein they clarified their initial intent, and set preliminary recommendations for the 1999–2000 season.

On February 25, 1999, the Committee unanimously recommended that kiwifruit be at least a minimum Size 45, and that Size 45 be defined in terms of weight and not pack requirements. The Committee recommended that Size 45 be defined as a maximum of 55 pieces of fruit in an 8-pound sample. This recommendation reflects the Committee's original intent to apply uniform minimum size requirements to all kiwifruit regardless of pack style. To further clarify its intent, the Committee recommended adding the size definition to the size requirements in § 920.302(a)(2), deleting the size designation definition in § 920.302(b)(2), and defining Size 45 in terms of weight and not pack.

The Committee considered other alternatives to maintaining Size 45, defined as a maximum of 55 pieces of fruit in an 8-pound sample, as the minimum size, but determined that these alternatives would not adequately address the industry's problems. The Committee discussed establishing two minimum net weight requirements, a lower net weight requirement for Size 45 fruit packed into trays and a higher net weight requirement for Size 45 kiwifruit packed into volume fill containers. This suggestion was not acceptable as the Committee believes pack style should not be the deciding factor in what size fruit is acceptable and that lower weights on trays would discriminate against Size 45 kiwifruit packed into containers other than trays. In addition, members commented that packers of volume fill containers might then have to meet a more restrictive minimum size requirement than importers of kiwifruit, and that two different minimum size requirements could cause confusion in the marketplace and result in disorderly marketing.

The Committee also considered establishing a count of 58 or 59 pieces of fruit for the Size 45 trays, but concluded that the count should remain a maximum of 55 pieces of fruit per 8-pound sample because the current minimum size continues to prevent shipments of low-quality, undersized fruit, and because repacking problems during the 1998–1999 season resulted from an outdated cup size in the Size 45 tray and not from the current minimum size.

Over the years, the size designation (pieces of fruit) for Size 45 has changed, but the tray inserts for this size fruit have not changed. In 1989, the size designation for Size 45 was changed to 57 pieces of fruit per 8-pound sample and remained there until 1994, when Size 45 became the minimum size and was defined as 55 pieces of fruit per 8-pound sample.

Kiwifruit was not packed in Size 45 trays during the three seasons preceding the 1998–1999 season as it was not profitable for growers. A small amount of kiwifruit was packed during the 1998–1999 season. The Committee believes that the molded trays utilized during the 1998–1999 season were manufactured prior to 1994, that the cell cups of these molded trays were designed to fit smaller fruit, and that the size of the cups contributed to the packing problems associated with Size 45 trays during the 1998–1999 season.

Tray manufacturers attending Committee meetings in January and February 1999 expressed interest in working with the industry in developing molded tray inserts with slightly larger cell cups for Size 45 trays. These slightly larger cell cups would allow slightly larger fruit to be packed and thus enable the minimum size requirements to be met.

As a result, the Committee unanimously recommended that the minimum size for all pack styles be established as a maximum of 55 pieces of fruit in an 8-pound sample. These changes would not impact the kiwifruit import regulation implemented under section 8e of the Act, because this recommendation would only clarify that the minimum size requirement applies to all shipments regardless of pack style.

The Committee further recommended that all rules and regulation changes begin as soon as possible to enable handlers to make operational decisions in time for the 1999–2000 harvest and shipping season.

Lot Stamp Requirement

Section 920.303 of the order's rules and regulations outlines container marking requirements for fresh shipments of California kiwifruit.

Section 920.303(d) requires all exposed or outside containers of kiwifruit, but not less than 75 percent of the total containers on a pallet, to be plainly marked with the lot stamp number corresponding to the lot inspection conducted by an authorized inspector. Individual consumer packages and containers that are being directly loaded into a vehicle for export shipment under the supervision of the Federal or Federal-State Inspection Service are not subject to this requirement.

Prior to the 1998–1999 season, handlers did not place individual consumer packages directly on pallets for shipping. Individual consumer packages were placed in master containers and the master containers bore the container marking requirements.

During the 1998–1999 season, new individual consumer packages that interlock and fit on a pallet were

utilized. These individual consumer packages are stacked six packages by six packages on a pallet resulting in 36 individual consumer packages per layer. Pallets are normally stacked 8–10 layers high. The Committee determined that this style of container would not meet the current marking requirements of not less than 75 percent of the total containers on a pallet being plainly marked with the lot stamp number. Due to the size and configuration of the interlocking individual consumer packages, approximately 57 percent of the individual consumer packages would be marked if all exposed or outside containers are marked with the lot stamp number.

Therefore, when the Committee met on February 25, 1999, it unanimously recommended adding language to § 920.303(d) that would require individual consumer packages placed directly on a pallet to have all exposed containers plainly marked with the lot stamp number corresponding to the lot inspection conducted by an authorized inspector or that a total of four placards be applied to the pallet of kiwifruit. The Committee believes that relaxing the requirement to have all exposed or outside containers and at least 75 percent of the containers on the pallet marked with the lot stamp number, would allow handlers to ship individual consumer packages without incurring the additional costs of marking containers that are not exposed, and slowing down the packing line to mark the containers.

The Committee considered other alternatives to the requirement to stamp all exposed or outside containers, or to attach four placards to the pallet, but determined that these suggestions would not adequately address the positive lot identification requirements.

One suggestion was to utilize one or two placards, but the industry believed that four placards (one on each side) would be a more adequate means of ensuring that the pallet met the positive lot identification (PLI) requirements.

Another suggestion was to identify each package in such a way that it could be traced back to the original inspection certificate. Placing date codes or other types of codes on every container prior to palletizing and using that as PLI on the inspection certificate was discussed. The Committee did not adopt this suggestion as it believed that all containers, including those in the center stacks would have to be marked with a special code, and that this would be more restrictive than current requirements for other containers placed on pallets. The Committee also believed that this might slow down the packing process, thus resulting in increased packing costs.

After considering the alternatives, the Committee unanimously recommended that individual consumer packages placed directly on a pallet have all exposed containers plainly marked with the lot stamp number corresponding to the lot inspection conducted by an authorized inspector or that a total of four placards be applied to the pallet of kiwifruit.

Changes To Clarify Pack and Container Marking Requirements

Section 920.303 of the order's rules and regulations outlines container marking requirements for fresh shipments of California kiwifruit.

Section 920.303(c)(3) establishes how the quantity shall be marked on bulk bins and requires the quantity to be indicated in terms of the size designation and net weight, or in terms of the size designation, net weight, and count.

Section 920.303(c)(5) establishes how the quantity shall be marked on individual consumer packages and requires that the quantity shall be indicated in terms of either net weight or count (or both) for individual consumer packages. It further requires that if count is used, it must be accompanied by the size designation.

At the February 25, 1999, meeting, the Committee recommended the following changes to pack requirements in §§ 920.302(a)(4)(ii) and (iv): (1) Change language in the first table of § 920.302(a)(4)(ii) as follows: Change ''Sizes'' to ''Count,'' change ''30 or larger'' to ''30 or less,'' and change ''39 or smaller'' to ''39 or more'; (2) add language to § 920.302(a)(4)(ii) to exclude individual consumer packages from the list of containers that utilize the size variation tolerance table for kiwifruit packed in containers with cell compartments, cardboard fillers, or molded trays; (3) change language in the second table of § 920.302(a)(4)(ii) from ''Sizes'' to ''Size Designation'; (4) change language in § 920.302(a)(4)(ii) to add individual consumer packages to the list of containers which specifies size variation tolerances for kiwifruit packed in bags, volume fill, or bulk containers; and (5) change language in § 920.302(a)(4)(iv) by adding ''individual consumer packages'' to the list of containers that utilize the table which specifies the numerical size and maximum number of fruit per 8-pound sample; delete the word ''numerical'' when describing size; and delete the words ''Column 1,'' ''Column 2,'' and ''Numerical Count'' from the size designation table in § 920.302(a)(4)(iv) as they are not necessary.

These changes would: (1) Reflect current industry practices; (2) clarify that the size variation tolerances which are applied to fruit packed in volume fill containers are also applied to individual consumer packages; (3) clarify that the size designation chart is utilized to determine the maximum number of fruit per 8-pound sample for individual consumer packages; and (4) delete unnecessary language.

The Committee also recommended the following changes to container requirements in §§ 920.303(c)(3) and (5) as follows: (1) Change language in § 920.303(c)(3) by adding ''individual consumer packages not within a master container'' to the list of containers in the size designation table specifying the size and maximum number of fruit per 8-pound sample; (2) delete the word ''bins'' and replace it with ''containers'; (3) delete the words ''net weight'' as they are not necessary; and (4) change language in § 920.302(a)(5) by adding ''within a master container'' after individual consumer packages.

These changes would ensure that marking requirements are clearly defined for individual consumer packages placed directly on a pallet as well as those packed within a master container.

Continuation of 1998–1999 Season Suspended Actions for the 1999–2000 Season

Continued Suspension of Minimum Net Weight Requirements for Trays

Section 920.302(a)(4) of the order's rules and regulations outlines pack requirements for fresh shipments of California kiwifruit.

Before the suspension action last September, § 920.302(a)(4)(iii) specified minimum net weight requirements for fruit of various sizes packed in containers with cell compartments, cardboard fillers, or molded trays.

Prior to the 1989–1990 season, there were no minimum tray weight requirements although 73.5 percent of the crop was packed in trays. During the 1989–1990 season, minimum tray weights were mandated, as there were many new packers involved in the kiwifruit packing process and stricter regulations were viewed as necessary to provide uniform container weights for each size. However, since that season the proportion of the crop packed in trays has steadily declined.

During the 1997–1998 season, only 15.5 percent of the crop was packed into molded trays and less than 1 percent of this fruit was rejected for failure to meet

minimum tray weights. As a consequence, the Committee believed that minimum tray weight requirements might no longer be necessary to maintain uniformity in the marketplace.

Prior to the 1998–1999 season handlers were required to meet the minimum net weight requirements as shown in the following chart:

Count designation of fruit	Minimum net weight of fruit (Pounds)
34 or larger	7.5
35 to 37	7.25
38 to 40	6.875
41 to 43	6.75
44 and smaller	6.5

The Committee met on July 8, 1998, and unanimously recommended suspension of the minimum net weight requirements for kiwifruit packed in cell compartments, cardboard fillers, or molded trays for the 1998–1999 season. Section 920.302(a)(4)(iii) was suspended for the 1998–1999 season by an interim final rule published September 3, 1998 (63 FR 46861).

As previously mentioned, both small and large handlers were able to reduce packing costs and to compete more effectively in the market during the 1998–1999 season because of the relaxation in packing requirements. The industry continued to pack well filled trays without having to spend the extra time weighing them. There was no reduction in the uniform appearance of fruit packed into trays.

Therefore, when the Committee met on January 13, 1999, to consider its preliminary recommendations for the season, it concluded that minimum net weight requirements for trays should continue to be suspended for the 1999–2000 season.

The Committee met on February 25, 1999, and unanimously recommended continuing the suspension of § 920.302(a)(4)(iii) for the 1999–2000 season. The 1999–2000 season ends July 31, 2000. The Committee plans to further evaluate the benefits during the 1999–2000 season.

Continued Suspension of Reinspection Requirements

Section 920.55 of the order requires that prior to handling any variety of California kiwifruit, such kiwifruit shall be inspected by the Federal or Federal-State Inspection Service (inspection service) and certified as meeting the applicable grade, size, quality, or maturity requirements in effect pursuant to § 920.52 or § 920.53.

Section 920.55(b) provides authority for the establishment, through the order's rules and regulations, of a period prior to shipment during which inspections must be performed.

Prior to the 1998–1999 season, § 920.155 of the order's rules and regulations prescribed that the certification of grade, size, quality, and maturity of kiwifruit pursuant to § 920.52 or § 920.53 during each fiscal year was valid until December 31 of such year or 21 days from the date of inspection, whichever was later. Any inspected kiwifruit to be shipped after the certification period lapses was required to be reinspected and recertified before shipping.

Section 920.155 was suspended for the 1998–1999 season by a final rule published August 4, 1998 (63 FR 41390). The Committee recommended this suspension to lessen the expenses upon the many kiwifruit growers who had either lost money or merely recovered their production costs in recent years. It concluded that the cost of reinspecting kiwifruit was too high to justify requiring it in view of the limited benefit reinspection provides. The Committee also believed it was no longer necessary to have fruit reinspected to provide consumers with a high quality product because storage and handling operations had improved in the industry.

During the 1998–1999 season, handlers voluntarily checked stored fruit prior to shipment to ensure that the condition of the fruit had not deteriorated. This enabled handlers to ship quality kiwifruit during the 1998–1999 season without the necessity for reinspection and recertification and the costs associated with such requirements. The Committee had estimated that handlers would save $50,000 by conducting their own reinspection during the 1998–1999 season.

At the February 25, 1999, meeting, the Committee unanimously recommended suspending § 920.155 for the 1999–2000 season. The Committee still believes that handlers saved $50,000 by conducting their own reinspection during the 1998–1999 season even though the marketed crop was less than projected, more fruit was in-line inspected than projected, and shipments had started later during the 1998–1999 season than anticipated.

Although freezing temperatures and winds during the spring may reduce the 1999–2000 crop estimate, the Committee believes the industry would continue to benefit from conducting its own reinspection.

The Committee would like to evaluate this suspension one more season before making a decision to permanently remove this requirement from the rules and regulations. Thus, the Committee unanimously recommended suspending § 920.155 for the 1999–2000 season. The 1999–2000 season ends July 31, 2000.

Maintaining Current Regulatory Changes

Maintaining the Current Size Variation Tolerance for Size 42 Kiwifruit

Section 920.302(a)(4) of the order's rules and regulations outlines pack requirements for fresh shipments of California kiwifruit.

Section 920.302(a)(4)(ii) specifies size variation ranges in terms of fruit diameter for each size of kiwifruit and size variation tolerances.

Section 920.302(a)(4)(ii) was revised by an interim final rule published September 3, 1998 (63 FR 46861) to include a provision to increase the size variation tolerance for Size 42 kiwifruit from 10 percent, by count, to 25 percent, by count.

During the 1998–1999 season, a significantly smaller amount of kiwifruit was packed into the 40 series sizes than anticipated. Only 7 percent of the fruit was packed into Size 42 containers, and only 15.3 percent was packed into Size 42 and 45 containers. This is significantly less than the previous two years when 35 percent of the fruit was packed into the 40 series sizes.

In addition, size variation was not a problem for Size 42 fruit during the 1998–1999 season, as the majority of the fruit was round and short and not a mixture of round and flat fruit. A typical crop has a mixture of round and flat fruit. A mixture of round and flat fruit is difficult to pack and slows down the packing line.

The Committee believes that maintaining the increased size variation tolerance for Size 42 kiwifruit for the 1999–2000 season would continue to benefit the industry by easing the packing burden and reducing costs, while maintaining uniform looking boxes of fruit desired by customers.

Maintaining the Current Maximum Number of Fruit per 8-Pound Sample for Kiwifruit Packed in Bags, Volume Fill, or Bulk Containers

Section 920.302(a)(4) of the order's rules and regulations outlines pack requirements for fresh shipments of California kiwifruit.

Section 920.302(a)(4)(iv) establishes a maximum number of fruit per 8-pound sample for each numerical count size designation for fruit packed in bags, volume fill, or bulk containers.

Section 920.302(a)(4)(iv) was revised by an interim final rule published

September 3, 1998 (63 FR 46861) to include a provision that increased the maximum number of fruit per 8-pound sample for Sizes 42 through 30. Size 42 fruit is smaller than Size 30 fruit. The size designation chart below depicts these changes:

Size designation	Maximum number of fruit per 8 pound sample
21	22
25	27
27/28	30
30	33
33	36
36	42
39	48
42	53
45	55

Currently, under the rules and regulations, kiwifruit packed in bags, volume fill, or bulk containers, must not exceed the maximum number of fruit per an 8-pound sample for each size designation.

Under the current regulations, handlers are better able to meet the needs of buyers, because kiwifruit sells by the piece, and buyers desire as much fruit in each container as the container can comfortably hold. California handlers are applying weight standards that are similar to those used by importers, thereby lessening confusion in the marketplace and facilitating the marketing of California kiwifruit.

The proposed changes address the marketing and shipping needs of the kiwifruit industry and are in the interest of handlers, producers, buyers, and consumers. The impact of these changes on producers and handlers is expected to be beneficial for all levels of business.

This action would not impose any additional reporting or recordkeeping requirements on either small or large kiwifruit handlers. As with all Federal marketing order programs, reports and forms are periodically reviewed to reduce information requirements and duplication by industry and public sectors. In addition, the Department has not identified any relevant Federal rules that duplicate, overlap, or conflict with this rule.

Further, the Committee's meetings were widely publicized throughout the kiwifruit industry and all interested persons were invited to attend the meetings and participate in Committee deliberations. Like all Committee meetings, the February 25, 1999, meeting was a public meeting and all entities, both large and small, were able to express their views on this issue. The Committee itself is composed of 12 members. Three of these members are handlers and producers, eight are producers only, and one is a public member. Finally, interested persons are invited to submit information on the regulatory and informational impacts of this action on small businesses.

A 20-day comment period is provided to allow interested persons to respond to this proposal. Twenty days is deemed appropriate because: (1) The changes proposed in this rule, if adopted, should be in place as soon as possible to enable handlers to make operational decisions in time for the 1999–2000 season which begins August 1; and (2) this action was unanimously recommended by the Committee at a public meeting and is not expected to be controversial. All written comments timely received will be considered before a final determination is made on this matter.

List of Subjects in 7 CFR Part 920

Kiwifruit, Marketing agreements, Reporting and recordkeeping requirements.

For the reasons set forth in the preamble, 7 CFR part 920 is proposed to be amended as follows:

PART 920—KIWIFRUIT GROWN IN CALIFORNIA

1. The authority citation for 7 CFR part 920 continues to read as follows:

Authority: 7 U.S.C. 601–674.

§ 920.155 [Suspended]

2. In part 920, § 920.155 is suspended in its entirety effective August 1, 1999, through July 31, 2000.

3. Section 920.302 is amended by revising paragraphs (a)(2), (a)(4)(ii), and (a)(4)(iv), suspending paragraph (a)(4)(iii),effective August 1, 1999, through July 31, 2000, removing the phrase ''Definitions. (1) The term KAC No.'' in paragraph (b) and adding in its place the phrase ''Definitions. The term Kac No.'', and removing paragraph (b)(2) to read as follows:

§ 920.302 Grade, size, pack, and container regulations.

(a) * * *

(2) Size Requirements. Such kiwifruit shall be at least a minimum Size 45. Size 45 is defined as a maximum of 55 pieces of fruit in an 8-pound sample.

* * * * *

(4) * * *

(ii) Kiwifruit packed in cell compartments, cardboard fillers or molded trays (excluding individual consumer packages) may not vary in diameter more than:

Count	Diameter
30 or less	½ inch (12.7 mm).
31–38	⅜ inch (9.5 mm).
39 or more	¼ inch (6.4 mm).

Kiwifruit packed in individual consumer packages, bags, volume fill, or bulk containers, fruit may not vary more than:

Size Designation	Diameter
30 or larger	½ inch (12.7 mm).
33, 36, 39, and 42	⅜ inch (9.5 mm).
45 or smaller	¼ inch (6.4 mm).

Not more than 10 percent, by count of the containers in any lot and not more than 5 percent, by count, of kiwifruit in any container, (except that for Sizes 42 and 45 kiwifruit, the tolerance, by count, in any one container, may not be more than 25 percent) may fail to meet the requirements of this paragraph.

* * * * *

(iv) When kiwifruit is packed in individual consumer packages, bags, volume fill or bulk containers, the following table specifying the size designation and maximum number of fruit per 8-pound sample is to be used.

Size designation	Maximum number of fruit Per 8-pound sample
21	22
25	27
27/28	30
30	33
33	36
36	42
39	48
42	53
45	55

* * * * *

4. In § 920.303, paragraphs (c)(3), (c)(5), and (d) are revised to read as follows:

§ 920.303 Container marking regulations.

* * * * *

(c) * * *

(3) For bulk containers or individual consumer packages not within a master container, the quantity shall be indicated in terms of the size designation and net weight; or in terms of the size designation and count.

* * * * *

(5) The quantity shall be indicated in terms of either net weight or count (or both) for individual consumer packages within a master container. If count is used, it must be accompanied by the size designation.

* * * * *

(d) All exposed or outside containers of kiwifruit, but not less than 75 percent of the total containers on a pallet, shall be plainly marked with the lot stamp number corresponding to the lot inspection conducted by an authorized inspector, except for individual consumer packages within a master container and containers that are being directly loaded into a vehicle for export shipment under the supervision of the Federal or Federal-State Inspection Service. Individual consumer packages of kiwifruit placed directly on a pallet shall have all outside or exposed packages on a pallet plainly marked with the lot stamp number corresponding to the lot inspection conducted by an authorized inspector or have one inspection label placed on each side of the pallet.

* * * * *

Dated: June 21, 1999.

Robert C. Keeney,

Deputy Administrator, Fruit and Vegetable Programs.

[FR Doc. 99–16209 Filed 6–24–99; 8:45 am]

BILLING CODE 3410–02–P

DEPARTMENT OF AGRICULTURE

Commodity Credit Corporation

7 CFR Part 1412

RIN 0560–AF79

Production Flexibility Contracts for Wheat, Feed Grains, Rice, and Upland Cotton

AGENCY: Commodity Credit Corporation, USDA.

ACTION: Advance notice of proposed rulemaking—Additional comments.

SUMMARY: The Commodity Credit Corporation (CCC) is re-issuing this Advance Notice of Proposed Rulemaking (ANPRM) to invite comment from all interested parties on reductions of Production Flexibility Contract (PFC) payments that were affected by the planting of fruits or vegetables in violation of section 118(b)(1) of the Federal Agriculture Improvement and Reform Act of 1996 (7 U.S.C. 7218(b)(1)). Comment was previously requested by a Notice published on May 5, 1999 (64 FR 24091) for which the comment period closed on June 2, 1999. This notice will allow for an extension of the comment period.

DATES: Comments must be received at the address below by July 23, 1999.

ADDRESSES: Comments should be directed to Sharon Biastock, Farm Service Agency (FSA), STOP 0517, 1400 Independence Avenue, SW., Washington, DC 20250.

FOR FURTHER INFORMATION CONTACT: Sharon Biastock, (202) 720–6336.

SUPPLEMENTARY INFORMATION:

Background

The Federal Agriculture Improvement and Reform Act of 1996 (the 1996 Act) provided producers the opportunity to enter into Production Flexibility Contracts (PFC's). The 1996 Act prohibited the planting of fruits and vegetables on PFC acreage except as provided by specific exceptions. Two exceptions require the application of an acre-for-acre payment reduction for each acre of fruit or vegetables planted on PFC acreage. A violation of the PFC occurs when producers do not comply with the fruit and vegetable provisions and the exceptions unless it is determined that the violation is not serious enough to warrant termination of the PFC. The 1996 Act provides that if the Secretary determines that a violation does not warrant termination of the PFC, the Secretary may require the owner or producer subject to the contract to: (1) Refund to the Secretary that part of the contract payments received by the owner or producer during the period of the violation, together with interest on the contract payments as determined by the Secretary; or (2) to accept a reduction in the amount of future contract payments that is proportionate to the severity of the violation, as determined by the Secretary.

Under current regulations, if the county FSA committee determines that a planting violation does not warrant termination of the PFC, a reduction may be made in the current or future contract payments, proportionate to the severity of the violation and equal to the sum of either or both: (1) The market value of the fruits and vegetables planted on contract acreage, and (2) the contract payment for each contract acre. The market value is determined by the State committee for the specific fruit or vegetable without any adjustment to reflect costs associated with planting, cultivating or harvesting the fruit or vegetable. If the number of acres on the farm planted to fruits or vegetables exceeds the total PFC acreage and more than one fruit or vegetable has been planted on the farm, the calculation is based on the fruit or vegetable determined to have the highest value. If the acreage of fruit or vegetable with the highest value is less than the acres in violation, the calculation for the remaining acres in violation is based on the fruit or vegetable with the next highest value. The payment reduction is applied to current PFC payments and any future PFC payments for the farm on which the violation occurred and any other farm in which the producers who share in PFC payments on the violating farm have an interest.

For example, if the county committee determines that 25 acres of fruit or vegetables were planted on PFC acreage in violation of the PFC, but the violation did not warrant termination of the PFC, a payment reduction for the planting violation would be assessed in addition to an acre-for-acre reduction for each of the 25 acres. If, on the farm in this example, the producer planted 100 acres of green peas, which the State committee determined had a value of $500 per acre, and one acre of celery, which the State committee determined had a value of $3,000 per acre, the payment reduction for the planting violation in this example would be $15,000 plus a PFC payment reduction for 25 acres. The $15,000 payment reduction for the planting violation represents the value of the one acre of celery and 24 acres of green peas, as determined by the State committee. This payment reduction would be applied to the current year PFC payments and any future PFC payments for the farm on which the planting violation occurred and any other farm in which the producers sharing in the PFC payments for the farm on which the planting violation occurred have an interest.

The payment reductions calculated in accordance with the current implementing regulations and procedure are viewed by some to be out of proportion to the severity of the fruit or vegetable planting violation. Accordingly, as indicated below, the public is invited to comment on PFC violations for planting fruits and vegetables.

Purpose

The purpose of this ANPRM is to seek comments on: (1) The appropriateness of the current method of calculating PFC payment reductions as a result of a fruit or vegetable planting violation as set forth in 7 CFR 1412.401; (2) alternative methods for calculating PFC payment reductions for fruit or vegetable planting violations, if the current method of calculation is considered inappropriate; (3) the retroactivity of any change in the method of calculating payment reductions; and (4) the effect any change in the method of calculating payment reductions should have on PFC's which have been terminated, or for which contract acreage was reduced, because of the current method of calculating

payment reductions for fruit or vegetable planting violations.

Signed at Washington, DC, on June 17, 1999.

Keith Kelly,

Executive Vice President, Commodity Credit Corporation.

[FR Doc. 99–16168 Filed 6–24–99; 8:45 am]

BILLING CODE 3410–05–P

DEPARTMENT OF AGRICULTURE

Animal and Plant Health Inspection Service

9 CFR Parts 92, 94 and 98

[Docket No. 98–090–1]

RIN 0579–AB03

Recognition of Animal Disease Status of Regions in the European Union

AGENCY: Animal and Plant Health Inspection Service, USDA.

ACTION: Proposed rule.

SUMMARY: We are proposing to amend the regulations concerning the importation of animals and animal products to recognize a region in the European Union as a region in which hog cholera is not known to exist, and from which breeding swine, swine semen, and pork and pork products may be imported into the United States under certain conditions. Additionally, we are proposing to recognize Greece as free of foot-and-mouth disease and swine vesicular disease, and to recognize eight Regions in Italy as free of swine vesicular disease. These proposed actions are based on a request from the European Commission's Directorate General for Agriculture and on our analysis of the supporting documentation supplied by the European Commission and individual Member States. These proposed actions would relieve some restrictions on the importation into the United States of certain animals and animal products from those regions. However, because of the status of those regions with respect to other diseases, and, in some cases, because of other factors that could result in an increased risk of introducing animal diseases into the United States, the importation of animals and animal products into the United States from those regions would continue to be subject to certain restrictions. We invite you to comment on this docket. We also invite you to comment on the related risk assessments.

DATES: We will consider all comments that we receive by August 24, 1999.

ADDRESSES: Please send your comment and three copies to: Docket No. 98–090–1, Regulatory Analysis and Development, PPD, APHIS, Suite 3C03, 4700 River Road Unit 118, Riverdale, MD 20737–1238.

Please state that your comments refer to Docket No. 98–090–1.

You may read any comments that we receive on this docket or its related risk assessments in our reading room. The reading room is located in room 1141 of the USDA South Building, 14th Street and Independence Avenue, SW., Washington, DC. Normal reading room hours are 8 a.m. to 4:30 p.m., Monday through Friday, except holidays. To be sure someone is there to help you, please call (202) 690–2817 before coming.

FOR FURTHER INFORMATION CONTACT: Dr. Gary Colgrove, Chief Staff Veterinarian, National Center for Import and Export (NCIE), VS, APHIS, 4700 River Road Unit 38, Riverdale, MD 20737–1231; (301) 734–8364; or e-mail: gary.s.colgrove@usda.gov.

The full risk assessments associated with this rule can be obtained by calling Dr. Gary Colgrove at (301) 734–8364 or, in the case of the quantitative disease risk assessment, electronically at http://www.aphis.usda.gov/vs/reg-request.html.

SUPPLEMENTARY INFORMATION:

Background

The Animal and Plant Health Inspection Service (APHIS) of the United States Department of Agriculture (the Department) regulates the importation of animals and animal products into the United States to guard against the introduction of animal diseases not currently present or prevalent in this country. The regulations pertaining to the importation of animals and animal products are set forth in the Code of Federal Regulations (CFR), title 9, chapter I, subchapter D (9 CFR parts 91 through 99).

Until recently, the regulations in parts 91 through 99 (referred to below as the regulations) governed the importation of animals and animal products according to the recognized disease status of the exporting country. In general, if a disease occurred anywhere within a country's borders, the entire country was considered to be affected with the disease, and importations of animals and animal products from anywhere in the country were regulated accordingly. However, international trade agreements entered into by the United States—specifically, the North American Free Trade Agreement and the World Trade Organization Agreement on Sanitary and Phytosanitary Measures—require APHIS to recognize regions, rather than only countries, and to recognize levels of risk, for the purpose of regulating the importation of animals and animal products into the United States.

Consequently, on October 28, 1997, we published in the **Federal Register** a final rule (62 FR 56000–56026, Docket No. 94–106–9, effective November 28, 1997) and a policy statement (62 FR 56027–56033, Docket No. 94–106–8) that established procedures for recognizing regions and levels of risk (referred to below as ''regionalization'') for the purpose of regulating the importation of animals and animal products. With the establishment of those procedures, APHIS can now consider requests to allow importations from regions based on levels of risk, as well as to recognize entire countries free of a disease.

In July 1997, APHIS received requests from the European Commission's (EC's) Directorate General for Agriculture to do the following: (1) Recognize certain Member States of the European Union (EU) as free in their entirety of certain specified diseases; and (2) recognize certain regions of EU countries as free of specified diseases, consistent with the disease status of those regions as recognized by the EC.

In response to the first request, and based on our review of supporting documentation accompanying the request, we published a proposed rule in the **Federal Register** (62 FR 61036–61041, Docket No. 97–086–1) on November 14, 1997, to declare Luxembourg and Portugal free of rinderpest and foot-and-mouth disease (FMD); Greece free of rinderpest; France, Greece, Luxembourg, and Spain free of exotic Newcastle disease; Portugal free of African swine fever; and Belgium, France, and Portugal free of swine vesicular disease (SVD). We solicited comments concerning our proposed rule for 60 days ending January 13, 1998. We received one comment by that date. The comment was from a veterinary association and fully supported the proposed rule. As noted, the proposed rule addressed part of the request submitted by the EC. Following publication of the proposed rule, we continued to review the remainder of the EC's request, including information we received following the initial request. (Our regulations establishing procedures for regionalization became effective after the initial request was received from the EC.) On December 8, 1998, we published a final rule in the **Federal Register** (63 FR 67573–67575, Docket

No. 97–086–2), which made final the provisions we had proposed in November 1997. Our determinations regarding the EC's request with regard to hog cholera in the EU, FMD and SVD in Greece, and SVD in Italy are set forth in this document.

Summary of Proposed Changes

In this document, we are proposing to add Greece to the list of regions recognized as free of FMD. We are also proposing to add Greece to the list of FMD-free regions whose exports of ruminant and swine meat and products to the United States are subject to certain restrictions to ensure a negligible risk of introducing FMD into this country.

We are also proposing to add Greece and eight Regions in northern Italy (listed below) to the list of regions recognized as free of SVD, and to the list of SVD-free regions whose exports of pork and pork products to the United States are subject to certain restrictions to ensure a negligible risk of introducing SVD into this country. The following Regions in northern Italy would be added to these lists: Abruzzi, Emilia Romagna, Friuli, Liguria, Marche, Molise, Piemonte, and Valle d'Aosta.

Additionally, with the exception of specified regions in Germany and Italy, we are proposing to recognize Austria, Belgium, France, Germany, Greece, Italy, Luxembourg, The Netherlands, Portugal, and Spain as a region in which hog cholera is not known to exist, and from which breeding swine, swine semen, and pork and pork products may be imported into the United States under certain conditions (discussed below). The regions that would be excepted from this recognition and that would continue to be considered regions in which hog cholera is known to exist are the following: In Germany, the Kreis Vechta in the Land of Lower Saxony, the Kreis Warendorf in the Land of Northrhine Westfalia, and the Kreis Altmarkkreis Salzwedel in the Land of Saxony-Anhalt; and in Italy, the Island of Sardinia and the Regions of Emilia Romagna and Piemonte.

We discuss each of the proposed changes at greater length below.

Greece Free of FMD and SVD; Certain Regions in Italy Free of SVD

We are proposing to recognize Greece as free of both FMD and SVD, and to recognize eight Regions of Italy as free of SVD. Regulations concerning FMD and SVD are as follows.

FMD: In § 94.1 of the regulations, paragraph (a)(1) provides that rinderpest or FMD exists in all regions of the world except those listed in § 94.1(a)(2), which have been declared to be free of those diseases. The regulations in § 94.1(b) prohibit, with specified exceptions, the importation into the United States of any ruminant or swine, or any fresh (chilled or frozen) meat of any ruminant or swine, that is from any region where rinderpest or FMD exists, or that has entered a port in, or otherwise transited, a region where rinderpest or FMD exists. Furthermore, the regulations in § 94.2 restrict the importation of fresh (chilled or frozen) products other than meat, and milk and milk products, of ruminants or swine that originate in or transit a region where rinderpest or FMD exists. Additionally, the importation of organs, glands, extracts, and secretions of ruminants or swine originating in a region where rinderpest or FMD exists is restricted under the regulations in § 94.3, and the importation of cured or cooked meat from a region where rinderpest or FMD exists is restricted under the regulations in § 94.4. Finally, the regulations in part 98 restrict the importation of ruminant and swine embryos and animal semen from a region where rinderpest or FMD exists.

SVD: In § 94.12 of the regulations, paragraph (a) provides that SVD is considered to exist in all regions of the world except those listed in § 94.12(a), which have been declared to be free of SVD. Paragraph (b) of § 94.12 provides that no pork or pork products may be imported into the United States from a region where SVD exists unless the pork or pork product meets specified conditions and is not otherwise prohibited importation into the United States by the regulations.

Proposed Recognition of Greece as Free of FMD and SVD

As indicated above, § 94.1 (a)(1) and (a)(2) categorize countries or other regions regarding their freedom from both rinderpest and FMD. Regions that are recognized as free of only one of the diseases are subject to the same restrictions as those in which both diseases exist. In our December 8, 1998, final rule, we recognized Greece as free of rinderpest. In this document, based on the information submitted to us by the EC's Directorate General for Agriculture, we are proposing to recognize Greece as free of FMD. Additionally, based on the information submitted, we are proposing to recognize Greece as free of SVD. Because a number of the criteria we examined with regard to Greece were common to our review concerning both FMD and SVD, we have combined the discussion of the two diseases. Based on the information submitted to us, we have concluded the following:

Veterinary infrastructure: The veterinary services authorities in Greece have the legal authority, organization, and infrastructure to control and eradicate FMD and SVD. The official veterinary force includes approximately 810 veterinarians located at the country's Veterinary Service headquarters and in the field, 70 laboratory veterinarians, and 190 lay assistants organized under the national Veterinary Service. The field force is distributed among 51 Local Disease Control Centers, each of which reports to the National Disease Control Center in Athens. In the event of an animal disease emergency, the national Veterinary Service has the authority to call on police and local authorities to provide support in depopulating infected premises, disposing of animal carcasses, controlling and restricting animal movements, and closing markets and abattoirs.

Disease History and Surveillance

FMD: The last outbreak of FMD in Greece was diagnosed in 1996 and was confined to the Prefecture of Evros. Surveillance for FMD is primarily passive at present, but active surveillance was carried out during and after the 1996 outbreak.

SVD: The last case of SVD in Greece was diagnosed in 1979. Surveillance for SVD is passive. Any suspected case of vesicular disease in swine is first investigated to determine if it is FMD. If FMD is ruled out, SVD is included in the differential diagnosis.

Diagnostic capabilities: Greece has diagnostic capabilities for both SVD and FMD. Diagnoses are carried out in accordance with the recommendations of the EC's Standing Veterinary Committee, which reflect international standards established by the Office International des Epizooties (OIE).

Vaccination: No vaccination is practiced in Greece for either FMD or SVD. Vaccination for FMD has been prohibited since 1991 and no vaccination for SVD has ever been practiced.

Adjacent regions: Greece is bordered by Albania, Macedonia, Bulgaria, and Turkey, none of which are recognized by the Department as being free of FMD or SVD.

Border controls: Although parts of its borders are mountainous, Greece is not separated from regions of higher risk by a uniform physical barrier. However, because of active FMD infection in Turkey, which is bordered by the Prefecture of Evros, Greece has implemented requirements in that

Prefecture for inspection of animals, along with serological testing of animals moved out of the Prefecture for fattening or breeding.

Under EC requirements, swine are not permitted into Greece from regions where SVD exists without first testing negative for SVD.

Movement across borders: The movement of animals and animal products into Greece from regions of higher disease risk is strictly controlled. The primary outbreaks of FMD that occurred during 1996 were associated with the illegal movement of immigrants into Greece from Turkey. Greece has subsequently tightened security and increased the presence of police and armed forces along the border. The border patrols are assisted by dogs. In addition, the movement controls that have been implemented in Evros create, in effect, a buffer that further mitigates the risk of FMD spreading into other Greek territories should the disease be reintroduced into Evros.

Demographics: According to a 1997 census, the ruminant and swine populations of Greece were as follows: 541,700 head of cattle, 9,244,000 sheep, 5,668,000 goats, and 904,000 pigs. Most production units in Greece can be characterized as small holdings, and there is no known feature of livestock production (e.g., extreme density of livestock) that increases the risk of disease spread.

Detection and eradication of disease: Both FMD and SVD are compulsorily notifiable diseases in Greece. The State Veterinary Service of Greece has the authority, diagnostic capability, and experience to rapidly detect, contain, and eradicate any incursion of FMD and SVD that might occur.

The findings described above are set forth in greater detail in a descriptive risk evaluation that we prepared. The risk evaluation may be obtained by contacting the person listed under **FOR FURTHER INFORMATION CONTACT**.

In addition to proposing to include Greece in the lists in §§ 94.1(a)(2) and 94.12(a) of regions declared free of both rinderpest and FMD, and of SVD, respectively, we are also proposing to add Greece to two other lists: The list in § 94.11(a) of regions declared free of rinderpest and FMD whose exports of meat and other animal products to the United States are nevertheless subject to certain restrictions, and to the list in § 94.13 of regions declared free of SVD whose exports of pork and pork products are also subject to restrictions.

Meat and other animal products from regions listed in § 94.11(a) are subject to those restrictions because the regions: (1) Supplement their national meat supply by importing fresh (chilled or frozen) meat of ruminants or swine from regions where rinderpest or FMD exists; (2) have a common land border with regions where rinderpest or FMD exists; or (3) import ruminants or swine from regions where rinderpest or FMD exists under conditions less restrictive than would be acceptable for importation into the United States.

The regions listed in § 94.13 have risk conditions regarding SVD that are similar to those in § 94.11(a) regarding rinderpest and FMD.

Because Greece meets each of the criteria described above that constitutes additional risk for FMD and SVD, we are proposing to include Greece in the lists of regions in §§ 94.11(a) and 94.13.

Section 94.11 applies to meat and other animal products of ruminants and swine and to ship stores, airplane meals, and baggage containing these meat or animal products. Section 94.11 generally requires that meat and other animal products of ruminants and swine: (1) Be prepared in an inspected establishment that is eligible to have its products imported into the United States under the Federal Meat Inspection Act; and (2) be accompanied by an additional certificate, issued by a full-time salaried veterinary official of the national government that is responsible for the health of the animals within the exporting region, assuring that the meat or other animal products have not been commingled with or exposed to meat or other animal products originating in, imported from, or transported through a region where rinderpest or FMD exists. Section 94.11 also requires that these articles meet applicable requirements of the U.S. Department of Agriculture's Food Safety and Inspection Service (FSIS) at 9 CFR chapter III.

The requirements in § 94.13, concerning SVD, are generally the same as those in § 94.11, which addresses risks associated with rinderpest and FMD. Proposed Recognition of Regions in Italy as Free of SVD

We are also proposing to recognize eight Regions in Italy as free of SVD. An Italian ''Region'' is the largest administrative unit within the country. The Regions that we would recognize as SVD-free are: Abruzzi, Emilia Romagna, Friuli, Liguria, Marche, Molise, Piemonte, and Valle d'Aosta. Based on the information submitted to us, we have concluded the following:

Veterinary infrastructure: The National Veterinary Services of Italy is well-organized and adequately staffed. Animal health programs are organized under the Italian Ministry of Health. Field services are delivered through 21 Regions, each with a regional veterinary chief. There are approximately 220 health units, each headed by a veterinary chief having responsibility for animal health and welfare and public health. The chief of each local unit reports to the regional chief on animal health matters in general, and reports directly to the Ministry of Health in Rome on matters relating to trade in the EU. Approximately 5,000 veterinarians are employed in an official capacity at either the Federal, Regional, or local level.

Disease history and surveillance: The SVD virus is not known to exist in any of the eight Regions. The last cases of SVD that occurred in any of these Regions were in 1996 in Abruzzi and Molise. In the other Regions, the last cases occurred in 1995 or earlier. An active surveillance program for SVD is conducted in each of the eight Regions, as well as in the rest of Italy. Each of the eight Regions has achieved SVD-accredited status in Italy through an established testing and accreditation program.

Diagnostic capabilities: Animal health laboratory services are provided by 10 Regional laboratories and a National Institute in Rome. Each laboratory has a specialized area of competence. The laboratory in Brescia is the national reference laboratory for vesicular diseases. All suspected cases of vesicular disease are forwarded to the Brescia laboratory, which has full competency in conducting serological and virological procedures for SVD. Diagnoses are carried out in accordance with the recommendations of the EC's Standing Veterinary Committee, which reflect international standards established by the OIE.

Vaccination: No vaccination for SVD is carried out in any of the eight Regions or anywhere else in Italy.

Adjacent regions: The Regions under consideration lie in the north of Italy, extending southward into the west-central portion of the country bordering the Adriatic Sea. To the north, several of the Regions are bordered by France, Switzerland, Austria, and/or Yugoslavia. Switzerland, Austria, and Yugoslavia are recognized by the Department as free of SVD. In our December 8, 1998, final rule (discussed above), we recognized France as free of SVD. The Regions of Friuli and Emilia Romagna are bordered by Regions (Lombardia, Trentino Alto Adige and/or Veneto) within Italy that have experienced limited outbreaks of SVD in 1998. The Regions of Emilia Romagna, Marche, Abruzzi, and Molise are bordered by Regions that experienced

outbreaks in 1997. As noted above, all Regions in Italy conduct active surveillance for SVD.

Border controls: The Regions of Italy are administrative units that, in association with Federal authorities, have local responsibility to control animal diseases. The eight Regions in question are delineated, in some areas, by physical features that present a barrier to the movement of animals. In general, however, the introduction of SVD into these Regions is prevented more by the control measures implemented in affected areas than by physical separation of Regions.

Movement across borders: In accordance with the Italian SVD accreditation program, swine can enter an accredited Region only if they originate from accredited premises. In the broader sense, the eight Regions rely on control measures imposed within Regions of higher risk to prevent SVD from entering free areas. Regionalization of affected areas in the EU, including Italy, is based on strict controls being exercised over the movement of animals and animal products within the region where an outbreak occurs. A 3-kilometer protection zone, surrounded by a 7-kilometer surveillance zone, is established around the affected premises or area. All movement of swine and swine products is prohibited from the protection and surveillance zones. The infected herd(s) and all contact herds are depopulated and the carcasses are either rendered or buried. Movement controls are lifted only after clinical examinations and serology indicate the swine remaining in the area are free of SVD.

If it is evident that the disease is not under control in an affected region, the EC's Standing Veterinary Committee may require that control measures be extended to include a buffer zone outside the surveillance zone. In addition, Member States are free to impose additional controls, above and beyond those prescribed by the EC, on affected regions within their territory.

Demographics: Swine raising within the eight Regions is typified by small holdings in which the swine are raised for the owner's consumption. Although commercial operations exist, these are not, in general, regions of high swine density.

Disease detection and surveillance: SVD is a compulsorily notifiable disease in Italy. The Italian Veterinary Services has the diagnostic capability, authority, and experience to rapidly detect, contain, and eradicate any incursion of SVD into these Regions that might occur.

The findings described above are set forth in greater detail in a descriptive risk evaluation that we prepared. The risk evaluation may be obtained by contacting the person listed under **FOR FURTHER INFORMATION CONTACT.**

Although we are adding the Italian Regions of Abruzzi, Emilia Romagna, Friuli, Liguria, Marche, Molise, Piemonte, and Valle d'Aosta to the list of regions in § 94.12(a) in which SVD is considered not to exist, we are also proposing to add each of the eight Regions to the list in § 94.13 of regions declared free of SVD that are subject to special restrictions on the exportation of meat and other animal products to the United States.

As noted above in our discussion regarding Greece's freedom from SVD, pork and pork products from regions listed in § 94.13 are subject to restrictions because the regions: (1) Supplement their national pork supply by importing fresh (chilled or frozen) pork from regions where SVD is considered to exist; or (2) have a common land border with regions designated as regions in which SVD is considered to exist; or (3) have certain import requirements that are less restrictive than are acceptable to the United States.

We are proposing to include in the list in § 94.13 the eight Regions in question because they each meet criteria 1 and 3, and all, except for Valle D'Aosta meet criterion 2 (assuming that Piemonte is recognized as free of SVD as provided in this proposed rule).

Request for Regionalization with Regard to Hog Cholera

In its July 1997 request to the Department, the EC's Directorate General for Agriculture requested that APHIS both recognize certain EU countries as free of specified diseases, and recognize as free from disease (where freedom is not currently recognized) ''all regions of the Community which are not subject to restrictions either in accordance with the provisions of relevant Directives or with decisions taken as safeguard measures * * *''

As discussed above, we have evaluated and are proposing regulatory changes to the disease status of Greece with regard to FMD and SVD, and to the status of eight Regions in Italy with regard to SVD. One of the other diseases specifically addressed by the EC in its request was classical swine fever (referred to in the current regulations and in this proposed rule as hog cholera).

Consistent with procedures for requesting regionalization that were established in our October 28, 1997, final rule, the request from the EC's Directorate General for Agriculture was that APHIS consider the hog cholera status of one region of the EC consisting of multiple member States. (Under the definitions in § 92.1, a region can be ''a group of national entities (countries) combined into a single area.'')

Certain countries or states in the EU are already listed in the regulations at § 94.10 as individual regions in which hog cholera is not known to exist. These countries or states are: Denmark; Finland; Great Britain; Northern Ireland; The Republic of Ireland; and Sweden. The application for regionalization from the EC's Directorate General for Agriculture does not address these Member States of the EU and we are proposing no change to their hog cholera status.

The EC's Directorate General for Agriculture stated that its application with regard to hog cholera was on behalf of the following Member States: Austria, Belgium, France, Germany, Greece, Italy, Luxembourg, The Netherlands, Portugal, and Spain. In its letter of request for regionalization, the EC's Directorate General of Agriculture referred to a veterinary equivalency agreement under discussion between the EC and the United States. The request for regionalization stated that ''[a]n objective of the equivalency agreement is that products which are free to circulate within the territory of one of the Parties to the agreement may be exported to the other Party. On this basis, therefore, animals and products which are derived from the free area of a Member State which is affected by one of these diseases should be eligible for export to the USA.''

The EC requested that we consider all of the EU free of hog cholera except for those regions for which the EC had restrictions in place because of outbreaks of hog cholera. At the time of the request, there were areas under such EC restrictions in Belgium, Germany, Italy, The Netherlands, and Spain.

We reviewed all of the information submitted to us by the EC's Directorate General for Agriculture. Following our receipt of the initial request, we requested and received additional information from the EC and from individual Member States. In addition, in December 1997, we conducted a site visit to and met with veterinary officials in Belgium, Germany, Spain, and The Netherlands—four of the five EC Member States that had experienced outbreaks of hog cholera in 1997. The purpose of the site visit was to gather additional information necessary for APHIS to reach a decision on the EC's

request. (A report on the site visit can be obtained from the person listed under **FOR FURTHER INFORMATION CONTACT**. Additional information on the fifth affected Member State, Italy, was provided by EC officials during meetings with APHIS representatives. During the period we were collecting and reviewing information, the areas subject to EC restrictions changed due to eradication efforts in the affected countries, and, in some cases, additional outbreaks. As of the publication date of this proposal, at least 6 months (the OIE standard for qualifying for freedom from hog cholera) have elapsed since the most recent outbreaks in Belgium (July 1997), The Netherlands (March 1998), and Spain (July 1998).

Based on the information available to us, we believe that, with the exception of specified regions in Germany and Italy, a region consisting of Austria, Belgium, France, Germany, Greece, Italy, Luxembourg, The Netherlands, Portugal, and Spain can be recognized as a region in which hog cholera is not known to exist. Therefore, we are proposing to amend the regulations at §§ 94.9(a) and 94.10(a) to reflect that recognition.

We are proposing to make this change based on the following conclusions—(Please note: Because the request from the EC was for the recognition of one region consisting of multiple countries, where appropriate, we have evaluated the following factors for the region as a whole):

Authority, organization, and veterinary infrastructure: Control is shared between the national services of the individual Member States and the EC. In terms of exports to the United States, the Member States are responsible for control of the production circumstances and requirements, including inspections required by statute, and for issuing health certification attesting to standards and requirements. The EC is responsible for overall coordination of the shared control of animal health, inspections and audits of inspection systems, and the legislative action necessary to ensure uniform application of standards and requirements within the single European Market.

Disease status: The most recent hog cholera outbreaks in the countries addressed in the EC's request occurred as follows: Austria, 1996 (in wild boars); Belgium, 1997; France, 1993; Germany, November 1998; Greece, 1985; Italy, March 1999; Luxembourg, 1987; The Netherlands, March 1998; Portugal, 1985; and Spain, July 1998.

Adjacent regions: Outbreaks of hog cholera occur sporadically in the neighboring border countries of Albania, the Czech Republic, Slovenia, Poland, and Slovakia. Although there have been no outbreaks in the Czech Republic since early 1995, serological tests still show positive results in wild boar.

Extent of an active disease control program: All measures for the control of hog cholera are harmonized within the EU. The EC imposes animal quarantine measures and movement controls for livestock. It also prohibits the importation of swine from any region within the EU or country outside of the EU in which hog cholera is known to exist, unless animals imported from outside the EU are accompanied by a declaration that the animals tested negative for hog cholera. The EC has a ''stamping out'' policy for hog cholera. Eradication is carried out by compulsory slaughter and destruction, by burning, burial, or rendering of all susceptible species on the affected premises and any adjacent premises where animals may have been exposed to hog cholera. Contaminated material is also destroyed.

If an outbreak of hog cholera occurs, a quarantine is placed on the affected premises. Additionally, a protection zone with a radius of at least 3 kilometers and a surveillance zone with a radius of at least 10 kilometers is placed around the affected premises. An immediate stop on movement from the zone is placed on all premises within the protection zone and the surveillance zone for at least 30 days and 15 days, respectively, after depopulation and cleaning and disinfection of the affected premises.

Measures taken within the protection zone, in addition to depopulation of affected premises, include: Serological testing and clinical examination of all remaining swine herds; a ban on transporting swine into or out of the zone; and a movement ban for swine within the zone for the first 21 days after establishment of the protection zone. The veterinary services of the national government of the EU Member State in which the zone is located may grant permission for swine movement for immediate slaughter, immediate destruction of swine, and diagnostic killing. Also, swine markets, auctions, and like events are prohibited.

Measures taken within the surveillance zone include: The serological testing and clinical examination of all swine herds, and a movement ban for all swine within the zone for 7 days following establishment of the zone. The veterinary services of the national government of the EU Member State in which the zone is located may grant permission for swine movement for immediate slaughter, immediate destruction of pigs, and diagnostic killing.

Vaccination: Member States in the EU are prohibited from using hog cholera vaccine and use, instead, purely sanitary measures. All Member States had discontinued vaccination by January 1990.

Movement of animals and animal products: Veterinary checks are conducted at the point of origin and point of destination for swine movements within the EU. With regard to hog cholera within the EU, swine may move to other Member States from regions considered free of hog cholera, and the importation of swine from third countries (countries outside the EU) is allowed with certain conditions if the animals are accompanied by a declaration that the countries are free of hog cholera, or the animals tested negative for hog cholera. Details on movement controls are described in EU Council Directives 90/425/EEC, 89/662/EEC, 97/12/EEC, 64/432/EEC, 91/496/EEC, 90/675/EEC, and others.

Historically, the spread of the hog cholera virus among EU Member States has reflected the complex marketing practices within the EU:

- Swine born in one Member State are commonly fattened or slaughtered in another. For example, in 1995, approximately 3.8 million piglets moved from one Member State to another for fattening. Approximately 3.9 million finished pigs moved from one Member State to another for slaughter.
- Animals moving from one Member State to another are not inspected at the border. Border controls were abolished with the formation of the Internal Market and were replaced with a system of veterinary checks at the points of origin and destination described in EU Council Directives 90/425/EEC, 89/662/EEC, 97/12/EEC, 64/432/EEC, 91/496/EEC, 90/675/EEC, and others.
- Document checks, identity checks, and sanitary inspections may be conducted at the farm of destination.

Livestock are individually tagged prior to movement so that tracebacks to the farm of origin can be done.

There is essentially no control over passenger baggage moving within the EU, although spot checks may be conducted on the baggage of passengers arriving from third countries.

Livestock demographics and marketing practices: The EU has a total of 1,272,631 hog farms. Of those, 845,559 are fattening farms.

Disease surveillance: OIE List A diseases of swine (and other species) are compulsorily notifiable in the EU. (List A diseases are those that have the

potential for very serious and rapid spread, irrespective of national borders, that are of serious socio-economic or public health consequence, and that are of major importance in the international trade of animals and animal products.) Suspicion of such diseases must be reported to the veterinary services of the national government of the EU Member State in question, which must ensure official investigation by an official veterinarian. Veterinary laboratories are available to all Member States to investigate outbreaks of any animal disease. All the laboratories are qualified to recognize and diagnose List A diseases. Laboratory tests for hog cholera are run on all sick swine if hog cholera or another notifiable disease of swine is suspected.

Tests are required for wild boar that are shot or found dead.

Diagnostic laboratories: National reference laboratories are responsible for coordinating the standards and diagnostic methods in other national laboratories in the Member State concerned. Liaison among the national reference laboratories is the responsibility of the Institute for Virology of the Veterinary College, Hanover, Germany, which is the Community Reference Laboratory for hog cholera.

Regions Where Hog Cholera Is Known to Exist

As noted above, the request from the EC's Directorate General for Agriculture that swine and swine products be eligible for import to the United States from most of the EU excluded certain specified areas. We concur that certain areas in the EU must continue to be considered as those in which hog cholera is known to exist.

In delineating such regions, we began with those identified as such by the EC. However, we had to take into account continued outbreaks in certain areas of the EU, and the fact that the EC released certain areas from restrictions prior to the completion of a 6-month waiting period. (According to OIE standards, areas can be recognized as free of hog cholera 6 months after the last case of the disease when ''stamping out'' is practiced.) Therefore, we used the following criteria in identifying those regions where hog cholera is known to exist: (1) The region experienced one or more outbreaks of hog cholera in domestic swine within the past 6 months; or (2) evidence exists that hog cholera exists in wild swine in the region and that the wild swine have been a source of infection in domestic swine.

In establishing geographic boundaries for the regions, we used the boundaries of the smallest administrative jurisdiction that has effective oversight of normal animal movements into, out of, and within that jurisdiction, and that, in association with national authorities if necessary, has the responsibility for controlling animal disease locally. In Germany, this administrative unit is a Kreis; in Italy, it is a Region. Veterinary infrastructures exist within the units we chose and are capable of controlling the movement of swine and pork products in the event of an outbreak of hog cholera.

Based on the above criteria, we are proposing to continue to consider the following regions of the EU as regions in which hog cholera is known to exist:

1. In Germany, the Kreis Vechta in the Land of Lower Saxony, the Kreis Warendorf in the Land of Northrhine Westfalia, and the Kreis Altmarkkreis Salzwedel in the Land of Saxony-Anhalt.

2. In Italy, the Island of Sardinia and the Regions of Emilia Romagna and Piemonte.

Because imports of swine, swine semen, and pork and pork products into the United States from the regions in Germany and Italy described above would pose such a high risk of introducing hog cholera into the United States, such imports would continue to be subject to the current mitigation measures in parts 94 and 98 of the regulations. As such, imports of live swine or swine semen would continue to be prohibited from those regions, as would pork or pork products that have not been treated in accordance with part 94.

Importation Conditions Based on Risk Factors

Although we are proposing to recognize a region consisting of Austria, Belgium, France, Greece, Luxembourg, The Netherlands, Portugal, Spain, and most of Germany and Italy as one in which hog cholera is not known to exist, it should be noted that such a designation does not presume negligible risk. A country or other region may, at a given moment, be one in which a disease does not exist, but if the probability of disease reintroduction is high, the risk of disease in animals and products exported from that country or other region cannot automatically be classified as acceptable. Therefore, import restrictions may have to imposed before exports from that country or region will be allowed into the United States.

In responding to the application for regionalization submitted by the EC's Directorate General for Agriculture, we assessed the disease risk under current EU regulations of the importation of live breeding swine, swine semen, and pork and pork products into the United States from the region described above. In conducting our assessment, we evaluated the risk by means of both a descriptive (formerly referred to as ''qualitative'') and quantitative approach. Each of these assessments is discussed below. (The full risk assessments are available from the person listed under **FOR FURTHER INFORMATION CONTACT**, or, in the case of the quantitative disease risk assessment, electronically at http://www.aphis.usda.gov/vs/reg-request.html).

Descriptive Risk Assessment

In preparing the descriptive assessment, we considered the information described above, and particularly the following facts:

1. The EU system of internal controls on the movement of animals and animal products includes veterinary checks at the points of origin and points of destination (EU Council Directives 90/425/EEC, 89/662/EEC, 97/12/EEC, 64/432/EEC, 91/496/EEC, 90/675/EEC, and others). This system replaced the prior system of veterinary checks at the borders of individual Member States. A ''stamping out'' policy is in effect for hog cholera. In the case of outbreaks, protection zones with a radius of at least 3 kilometers and surveillance zones with a radius of at least 10 kilometers are established to prevent the disease from spreading to other areas. Immediate ''stop movements'' are placed on all premises within the two zones for at least 30 and 15 days, respectively, after depopulation and cleaning and disinfection of an affected premises. In practice, the size and duration of these zones frequently exceed these minimum requirements. The EU practices extensive tracing and preventive slaughter in the event of an outbreak.

2. The EU is known to have endemic hog cholera in wild boar populations in northern Germany, and perhaps also in some alpine areas in Austria, France, and Italy. We have not included some of these endemic areas as high-risk areas in this proposed rule, because there have been no recent hog cholera outbreaks in domestic swine in these areas.

3. Outbreaks of hog cholera in domestic swine have occurred in the EU every year for the past 6 years. In 1993, outbreaks occurred in Belgium, France, Germany, and Italy. In 1994, outbreaks occurred in Austria, Belgium, Germany,

and Italy. In 1995 and 1996, outbreaks occurred in Austria, Germany, and Italy. In 1997, outbreaks occurred in Belgium, Germany, Italy, Spain, and The Netherlands. In 1998, outbreaks occurred in Germany, Italy, Spain, and the Netherlands. In 1999, an outbreak occurred in Italy. Some of these outbreaks have been epidemiologically related to disease in wild boar populations. Secondary and tertiary spread is known to have occurred.

4. In 1997, an estimated 103 of 611 outbreaks in the EU occurred outside any zones that were under restrictions because of hog cholera. Of these 103, only one was a swine semen collection center approved for export, and only one was a breeding operation that engaged in export sales. The remainder were fattening farms, mixed operations, or feeder pig operations. No other export-oriented swine semen collection center or breeding operation outside of restricted zones became infected in 1998. Epidemiological evidence suggests the disease was present in various regions for 7 days to nearly 8 weeks before it was detected and the region was placed under restrictions.

5. Outbreaks of hog cholera occur sporadically in countries adjacent to the EU. Adjacent countries known to have had outbreaks of hog cholera in the past several years include Albania, the Czech Republic, Slovenia, Poland, Bulgaria, and Slovakia. Many of these countries have wild boar populations that commingle with wild boar populations in the EU.

6. APHIS's data indicate that an average of approximately 1,500 breeding swine and 700–1,800 doses of semen were imported into the United States each year from 1994 to 1997 from the EU Member States recognized as free from hog cholera.

Quantitative Risk Assessment

In addition to the descriptive assessment of risk described above, we conducted a quantitative assessment of the probability of the introduction of hog cholera into the United States from the region in question. While we based our proposed consideration of the hog cholera status of the region in question on the descriptive assessment, the quantitative assessment enabled us to assess the likelihood of the introduction of hog cholera from the region into the United States under certain conditions, and to determine what, if any, mitigating measures we considered necessary to reduce any risk to a negligible level.

In conducting our quantitative assessment, we made some starting point assumptions. These assumptions are listed below and are described in more detail in ''Biological Risk Analysis: Risk Assessment and Risk Management Options for Imports of Swine and Swine Products from the European Union, USDA Animal and Plant Health Inspection Service, June 2, 1999.'' (Please note: The Quantitative Risk Assessment methodology is under independent review. We welcome comments on the methodology applied to import questions.)

In general, we made the following starting point assumptions:

- That the region of export adheres to the current APHIS regulations that require that veterinary authorities of the exporting country provide certification of the origin of an animal or animal product to be exported and ensure that the animal or animal product has not been exposed to a contagious disease during shipment from the point of origin to the point of embarkation, and, additionally, that OIE export guidelines are applied to movement of animals and animal products within the EU.
- That 1996 and 1997 outbreaks of hog cholera in the Netherlands should be used as a ''worst case'' scenario of an undetected outbreak of hog cholera occurring outside of an established protection or surveillance zone.
- That the following routine procedures for swine semen currently in place in the EU are adhered to. Specifically, the EU regulations require that animals must have been accompanied to a semen collection center by a veterinary certificate of origin, that they have not been given the opportunity to commingle with swine from hog cholera-affected areas, and that the semen originate from a collection center approved for export by the veterinary services of the national government of the EU Member State in which the collection center is located. In addition, donor boars are held in isolation for at least 30 days prior to entering the semen collection center, and test results for hog cholera using a test approved by the OIE and performed during that 30-day period must be negative.
- That all swine slaughtered to produce pork for export to the United States from the EU are handled in compliance with EU regulations for the control and eradication of hog cholera, and that pork for export to the United States is produced using the EU's standard operating procedures for pork production.
- That if a hog cholera-infected animal is slaughtered, all of the meat from that animal is contaminated with virus. This is a worst case assumption that magnifies the probability of a hog cholera outbreak.

In addition to these starting assumptions for the risk assessment, we assumed that swine slaughtered to produce pork for export to the United States are slaughtered in compliance with the requirements of the United States Department of Agriculture's Food Safety and Inspection Service. These requirements include ante-mortem and post-mortem inspection. Although the impact of these requirements was not considered in the risk assessment, we believe that the requirements would further reduce the quantity of contaminated pork likely to be exported to the United States.

The results of the quantitative risk assessment suggest that unmitigated importation of breeding swine into the United States from the region in question would likely result in one or more outbreaks of hog cholera in this country every 33,670 years; the unmitigated importation of swine semen would likely result in one or more outbreaks in this country every 1,842 years; and the unmitigated importation of fresh (chilled or frozen) pork would likely result in one or more outbreaks in this country every 22,676 years. By unmitigated importation, we mean no additional import requirements beyond certification of the origin of the product, the areas it has transited, and the lack of commingling, as well as the biosecurity measures in place in the EU as discussed above and described in EU Council Directives 90/425/EEC, 89/662/EEC, 97/12/EEC, 64/432/EEC, and 91/496/EEC. Some of these biosecurity measures are set out in our proposed conditions for importation and are described below.

Results of the Risk Assessments

The results of both our descriptive and quantitative assessments suggest that the risk of introduction of hog cholera into the United States due to the importation under the conditions described in the preceding paragraph of fresh (chilled or frozen) pork, and breeding swine would be expected to present negligible hog cholera risk levels. Because importation of live swine other than breeding swine would not be cost-effective, we limited our risk assessment to breeding swine. In the future, if we receive requests to import live swine other than breeding swine, we will conduct a separate assessment of the risk of importing those swine. We are proposing additional import requirements for swine semen, over and above those biosecurity measures required by directive in the EU. Our proposed requirements for pork and

pork products, breeding swine, and swine semen are discussed below.

Importation of Pork and Pork Products

Our conclusion is that, based on the likelihood of importation of the disease agent, the destination of the imported articles and their usage, and disposal of waste, pork and pork products could be imported into the United States from the region in question with negligible risk of introducing hog cholera, provided the pork or pork products meet all other applicable import requirements in the regulations and provided they are accompanied by a certificate of origin certifying the following: (1) That the articles have not been commingled with pork or pork products produced from swine from regions in which hog cholera is known to exist; and (2) that the swine from which the pork or pork products were produced have not lived in a region listed at that time as one in which hog cholera is known to exist and have not transited such a region unless moved directly through such a region in a sealed means of conveyance with the seal determined to be intact upon arrival at the point of destination.

Importation of Live Swine and Semen from Swine

We believe that the risk of the introduction of hog cholera from the importation of live swine and swine semen from the region in question would be negligible if the following risk mitigation measures are taken:

The swine, which would have to be breeding swine, and swine semen would have to meet all import requirements in the regulations and be accompanied by a certificate of origin certifying that the swine or donor boars have never lived in a region listed at that time as a region in which hog cholera is known to exist, have never transited such a region unless moved directly through such a region in a sealed means of conveyance with the seal determined to be intact upon arrival at the point of destination, and have never been commingled with swine that have been in a region listed at that time as one in which hog cholera is known to exist.

Additionally, we are proposing to require that no equipment or materials used in transporting the swine or donor boars under this rule may have previously been used for transporting animals ineligible for export to the United States under the rule, unless they have been cleaned and disinfected following such previous use. This requirement would apply to movement of donor boars from the farm of origin to the semen collection center, and to the movement of other swine from the farm of origin to the point of entry into the United States.

We would not allow swine semen to be imported into the United States from the region unless the semen comes from a semen collection center approved for export by the veterinary services of the national government of the EU Member State in which the collection center is located. Additionally, we would require that the donor boar be held in isolation for at least 30 days prior to entering the semen collection center, and, no more than 30 days prior to being held in isolation, be tested with negative results with a hog cholera test approved by the International Office of Epizootics. We would also require that the semen shipment not be exported to the United States unless the donor boar is observed by the semen collection center veterinarian while the donor boar is at the collection center, including at least a 40-day holding period at the semen collection center following collection of the semen, and, along with all other swine at the center, exhibits no clinical signs of hog cholera.

We are proposing to add these requirements to the regulations, even though the current import requirements regarding certain other diseases already require a quarantine period for donor boars in the country of export. In considering the risk of the introduction of hog cholera into the United States through swine semen, we believe it is necessary to assume that quarantine periods do not exist for other diseases, because it is possible that regions currently affected by these other diseases could one day be considered free of them.

On a practical level, the quarantine requirements we are proposing with regard to swine semen and hog cholera would have minimal current effect on the holding of swine. Currently, quarantine and testing of swine is required for semen imported from regions affected with tuberculosis, brucellosis, and pseudorabies, and each of the diseases is considered to exist in each of the countries included in the region proposed in this document. The current regulations with regard to these diseases require that donor boars be quarantined for a minimum of 60 days before collection of semen for export to the United States (compared to a proposed 30-day minimum quarantine prior to entry into the semen collection center under the hog cholera provisions of this proposal), and that they be tested twice with negative results for tuberculosis, brucellosis, and pseudorabies, as applicable to the region of origin. Tuberculin tests must be conducted with an interval of at least 60 days between tests, and the second test must be conducted no sooner than 30 days following collection of the semen (compared to a minimum holding period of 40 days following collection of semen under the proposed hog cholera regulations).

The requirements pertaining to pork and pork products and live swine would be added to the regulations in a new § 94.22. The requirements pertaining to swine semen would be added to the regulations in a new § 98.38.

Movement Restrictions

We are also proposing to establish a new § 92.3 to provide that whenever the EC establishes a disease quarantine in a region that we have recognized as one in which the disease is not known to exist, the importation of animals and animal products prohibited or restricted movement from the quarantined area in the EU would also be prohibited importation into the United States. We believe this provision, which would be set forth in a new § 92.3, would protect livestock in the United States by establishing a regulatory mechanism that goes into effect as soon as a quarantine is established in the EU and that does not require promulgation of a rule and its publication in the **Federal Register** each time there is a limited disease outbreak in a free area. The proposed provisions would apply only to those disease outbreaks in the EU for which the region where the outbreak occurs had been recognized by the Department as one in which the disease is not known to exist at the time of the outbreak. We would also add a definition of *European Union* in § 92.1.

Miscellaneous

Additionally, we are proposing to make several nonsubstantive changes to the regulations. In §§ 94.9 through 94.13, we would combine the references to ''Great Britain'' and ''Northern Ireland'' to read instead ''the United Kingdom (England, Scotland, Wales, the Isle of Man, and Northern Ireland).'' We are also proposing to change the reference to ''Central American regions'' in § 94.12 to read instead ''Central American countries.'' The word ''countries'' was inadvertently changed to ''regions'' in earlier rulemaking.

Executive Order 12866 and Regulatory Flexibility Act

This proposed rule has been reviewed under Executive Order 12866. The rule has been determined to be significant for the purposes of Executive Order 12866 and, therefore, has been reviewed

by the Office of Management and Budget.

The Secretary of Agriculture is authorized to promulgate regulations to prevent the introduction or dissemination of any contagious, infectious, or communicable disease of animals from a foreign country into the United States. This proposed rule would recognize certain regions in the EU as those in which hog cholera is not known to exist, and from which breeding swine, swine semen, and pork and pork products may be imported into the United States under certain conditions. Additionally, we are proposing to recognize Greece as free of FMD and SVD, and to recognize eight Regions in Italy as free of SVD. These proposed actions are based on a request from the EC's Directorate General for Agriculture and on our review of the supporting documentation supplied by the EC and individual Member States. These proposed actions would relieve some restrictions on the importation into the United States of certain animals and animal products from those regions.

In considering this proposed rulemaking, we considered three options. The first, which we could have applied to all the diseases addressed by this proposed rule, was to retain the current regulations and make no changes. We did not consider this an acceptable option because it was not warranted by the disease status of the regions in question and such inaction would have been contrary to U.S. obligations under international trade agreements. A second option, specific to hog cholera, was to allow free movement of swine, swine semen, and pork from the region we are proposing to recognize as one in which hog cholera does not exist. Based on our risk assessments, however, we concluded that adopting that option would lead to an unacceptable risk of introducing hog cholera into the United States. Therefore, we chose to propose the provisions of this proposed rule, based on the information discussed in this document.

Below is a summary of the economic analysis for the changes in the import regulations proposed in this document. The economic analysis provides a cost-benefit analysis as required by E.O. 12866 and the analysis of impacts on small entities as required by the Regulatory Flexibility Act. A copy of the full economic analysis is available for review at the location listed in the **ADDRESSES** section at the beginning of this document

We do not have enough data for a comprehensive analysis of the economic impact of this proposed rule on small entities. Therefore, in accordance with 5 U.S.C. 603, we have performed an Initial Regulatory Flexibility Analysis for this proposed rule. We are inviting comments about this proposed rule as it relates to small entities. In particular, we are interested in determining the number and kind of small entities that may incur benefits or costs from implementation of this proposed rule and the economic impact of those benefits or costs.

Recognition of Certain EU Regions as Those in Which Hog Cholera Does Not Exist

The analyses with regard to hog cholera examine the economic impact of the potential importation of fresh (chilled or frozen) pork, breeding swine and swine semen from regions in the EU that would be recognized by this proposed rule as those in which hog cholera does not exist. This proposed rule is in response to a request received in July 1997 from the European Commission's Directorate General for Agriculture to do the following: (1) Recognize certain EU Member States as free in their entirety of certain specified diseases; and (2) recognize certain regions of EU Member States as free of specified diseases, consistent with the disease status of those regions as recognized by the European Union.

This proposed rule is in accordance with the policy of ''regionalization,'' whereby import requirements are tailored to regions determined by science-based risk factors, rather than being restricted to political boundaries.

Only certain regions in Germany and Italy would not be recognized by this proposed rule as those in which hog cholera is not known to exist. Five EU Member States that are already recognized in the current regulations as those in which hog cholera is not known to exist are excluded from this analysis, because the regulations governing hog cholera do not currently restrict their pork, live swine, and swine semen exports to the United States.

Potential exports to the United States from the 10 EU Member States of concern (Austria, Belgium, France, Germany, Greece, Italy, Luxembourg, the Netherlands, Portugal, and Spain) constitute the trade volumes used in the analysis, assuming no risk of disease introduction. For pork, the quantities are based on the proportion of Denmark's global pork exports that are imported into the United States. It is assumed that a similar percentage of the global pork exports of each of the Member States of concern could be exported to the United States. The total quantity of pork assumed is about 137,800 metric tons. For breeding swine and swine semen imports, quantities that might be imported are based on historical data and prior U.S. demand for EU swine genetic stock.

It should be noted that present high levels of U.S. pork production and depressed pork prices imply that imports resulting from this regulatory change are likely to be minimal. The import quantities used in the analysis allow assessment of potential impacts if market conditions were to change in favor of U.S. imports of EU swine and swine products. Estimated effects on producers and consumers reflect the expected effects of these imports assuming no disease risks. Net trade benefits are then compared to the likelihood that hog cholera would be introduced into the United States and the projected costs that would arise from such introduction.

Although we expect that the proposed impact from the regulatory changes would be minimal, we used a net trade benefit model to evaluate what would happen should trade occur. The economic model used to evaluate pork imports is a net trade welfare model. Benefits to the United States of pork imports from the EU Member States of concern are calculated as the net change in consumer surplus and producer surplus. Assuming an import volume of 138,000 metric tons of pork, the annual net trade benefit is estimated to be about $5.5 million (1997 dollars). Based on pork data for the period 1993–97, the welfare changes in consumer surplus and producer surplus would represent about a 0.9 percent decrease in U.S. pork production, a 0.8 percent increase in pork consumption, and a 1.0 percent decline in the farmgate price of pork.

The annual value of breeding boar imports is assumed to be zero for the minimum and most likely import volume, and $0.9 million for the maximum import volume. For breeding gilt imports, it is assumed that the annual values are zero for the minimum and most likely import volume, and $1.2 million for the maximum import volume. The reason breeding swine are unlikely to be imported is because of the minimal marginal benefits that would be gained, given the genetic characteristics of many EU swine breeds already incorporated by U.S. breeders. Based on historical data, the annual value of swine semen imports is assumed to be zero, $46,000, and $102,000 for the minimum, most likely, and maximum import volumes, respectively.

The import quantities used to estimate trade impacts are also used to examine the consequences and

likelihoods of hog cholera introduction due to the effects of this proposed rule. Four biological consequence scenarios (low, moderate, high, and very high) are considered for each commodity group (pork, live swine, and swine semen). The consequence scenarios are weighted separately for each commodity group, based on their assumed likelihoods of occurrence. The low and moderate scenarios are considered most likely for pork, due to the expectation that any initial exposure that might occur would be in a small to medium-sized waste feeding operation in a low-density area. Waste feeding is generally considered the most likely means by which a foreign animal disease such as hog cholera could be introduced into the United States via contaminated pork. However, if hog cholera were introduced through breeding swine or swine semen, the first herds affected would most likely be large commercial herds. We invite public comment on the assumed weighting factors for pork, breeding swine, and swine semen. (The quantitative disease risk assessment associated with this rule can be obtained by calling Dr. Gary Colgrove at (301) 734–8364, or electronically at http://www.aphis.usda.gov/vs/reg-request.html.)

Under conservative assumptions, net consequences of any hog cholera introduction under the four biological consequence scenarios are estimated to range from $24 million (1997 dollars) to $355 million for pork, and from $91 million to $958 million for live swine and swine semen.

Despite the serious consequences that could result from a hog cholera outbreak, extremely small likelihoods of hog cholera introduction when risk mitigation measures are taken make overall disease risks insignificant. For pork, assuming no risk mitigation measures other than certification of origin and handling, and the mitigating measures already in place in the EU, the expected frequency of hog cholera introduction was found to be only one or more outbreaks in 22,676 years. For breeding swine, the likelihood of hog cholera introduction, assuming no additional mitigation measures, was estimated to be one or more outbreaks in 33,670 years. Certification of origin and handling is universally accepted in international animal and animal product trade agreements as integral to disease prevention, and is therefore included in the starting analysis.

Swine semen imports would satisfy acceptable levels of risk if they were conducted in accordance with EU provisions for semen collection, with the additional mitigating measure of a 40-day hold on donor boars prior to shipment of the semen to the United States. Again, for this determination of risk, we are assuming that no other regulations are in place that require a holding period after semen collection. This 40-day holding period would allow for observation of the donor animals and other animals in the semen collection center for potential clinical signs of hog cholera. We determined that the most likely expected frequency of simulation distributions of hog cholera introduction without application of the 40-day holding period would be one or more outbreaks in 1,842 years, compared to a most likely expected frequency of one or more outbreaks in 257.7 million years with the 40-day hold.

In our economic analysis, we compared potential trade benefits and disease costs. We expect that pork, breeding swine, and swine semen imports from the region in question would be unlikely to be significantly affected by these proposed regulatory changes, given current hog and pork market conditions. Nevertheless, for purposes of the comparison, we assumed that a certain level of trade in these commodities would occur. We conducted simulations assuming imports of 137,779 metric tons of pork, 800 doses of swine semen, and 1,592 breeding swine, based on historical volumes of imports from countries in the EU in which hog cholera is not known to exist. For each commodity, the simulations generated probability distributions of the annual net benefits of trade minus the product of the annual likelihood of hog cholera introduction and the discounted net economic consequences of hog cholera introduction. The most likely value of the distribution, given the assumed import levels, is $3.4 million for pork imports and $1.22 million for breeding swine imports. For swine semen, the most likely value of the distribution is negative $19,074 without the 40-day hold, and positive $28,714 when the 40-day hold mitigation is included. We emphasize again, however, that we do not expect significant levels of imports as a result of these proposed regulatory changes, but the simulation results are presented to provide some insight into the potential impact of the proposed regulatory changes should market conditions change in the future.

Regarding effects of the proposed rule on small entities, more than 88 percent of all U.S. hog farms meet the Small Business Administration size criterion for small entities of annual revenues of less than $500,000. It is unlikely that any producers, large or small, would be significantly affected. Pork, breeding swine, and swine semen imports from the region in question would be unlikely to be significantly affected by this proposed regulatory change, given current market conditions.

Even if EU pork exports to the United States were to eventually grow to levels that have been assumed in the trade analysis, potential economic effects on small producers would amount to less than 1 percent of average revenues. Therefore, we do not believe this proposed rule would have a significant economic impact on small entities, even if the U.S. pork market were more attractive for EU exports.

Recognition of Greece as Free of FMD and SVD

We are also proposing to recognize Greece as free of FMD and SVD. In the absence of any other restrictions due to other diseases of concern, recognizing Greece as free of FMD and SVD would eliminate certain restrictions on the importation of ruminants, swine, and their products into the United States from that country.

Historically, Greece's exports of hoofed farm animals, meat and meat products, and milk have been very small compared to the amounts and values of these commodities traded by the United States. The average annual value of hoofed farm animals exported by Greece during the period from 1994–1997 was only 0.05 percent of the average value of these animals imported by the United States over the same period. Comparable percentages for meat and meat products and for milk were 0.5 percent and 1.9 percent, respectively. In other words, in the unlikely event that all of Greece's exports of these commodities were diverted to the United States, they would comprise only extremely small portions of U.S. imports.

Entities potentially directly affected by this proposed rule—assuming no other overriding disease restrictions—are brokers, agents, and others in the United States who would be directly involved in the importation and sale of hoofed farm animals, meat and meat products, and milk from Greece. In theory, U.S. producers of these commodities could be indirectly affected if imports were substantial enough to influence prices. As indicated above, this possibility is extremely remote.

The number and sizes of entities that might be directly involved in the importation and sale of hoofed farm animals, meat and meat products, and milk from Greece is not known. Nevertheless, it is reasonable to assume that most of these entities would be

small, based on criteria established by the Small Business Administration.

To the extent that the proposed rule would reduce restrictions on imports from Greece of hoofed farm animals, meat and meat products, and milk, it could have a positive economic effect on U.S. importers. However, imports are likely to be of extremely small amounts compared to U.S. trade overall, and the economic impact on U.S. entities, large and small, is expected to be negligible. Likewise, indirect economic impacts on U.S. producers are expected to be insignificant.

Recognition of Regions in Italy as Free of SVD

We are also proposing to recognize eight Regions in northern Italy as free of SVD. Due to the unavailability of trade statistics for the eight Regions in question, we based our analysis on swine and pork trade for Italy as a whole.

Italy's breeding swine imports far outweigh its exports. The average annual value of such exports during the period 1994–97 was only $4,000, compared to annual imports valued at over $2 million. In contrast, the United States is a net exporter of breeding swine, with the average value of exports, $6.5 million, six times the average value of imports, $1.1 million. For other swine, Italy, again, is a net importer, with imports valued at an annual average of about $135 million, compared to exports valued at less than $2 million. The United States is also a net importer of other swine, with average annual imports of $204 million and exports of $4 million.

Italy is a net importer of pork, with average annual imports of over $1.5 billion, compared to exports of $55 million. The United States is a net exporter of pork, with average annual exports of over $770 million, compared to imports of $466 million. In only one category of pork, ''hams, shoulders with bone,'' is Italy a net exporter. Its annual exports in that category have averaged about $30 million, compared to imports of about $6 million. The United States is also a net exporter of hams, although its trade is more balanced; the average annual value of such exports from 1994–97 was about $6 million, compared to imports valued at about $4 million.

Italy's trade in edible swine offal was fairly balanced during the period 1994–97, with imports slightly outweighing exports. In 1997, however, exports surged to become 40 percent greater than imports. The United States is a strong net exporter of edible swine offal, with exports averaging $94 million annually over the 4-year period, compared to an annual average for imports of $7 million.

Overall, then, Italy's imports of swine and pork outweigh its exports, while the opposite is true for the United States (except in the case of live swine other than breeding swine, a U.S. import market dominated by Canada). The notable exception to this pattern for Italy is the category ''hams, shoulders with bones,'' for which Italy has a sizable export industry. It is not known what percentage of these commodities are produced in the eight Regions of Italy addressed by this proposed rule. Clearly, trade consequences for the United States would be smaller than those indicated by Italy's national statistics, and, thus it is assumed to be insignificant. U.S. imports of ''hams, shoulders with bone'' originating in the eight Regions would compete as much with imports of these products from other countries as they would with those produced in the United States.

Small entities that could be directly affected by the proposed rule change would be buyers and wholesalers of swine and pork products. Pork and swine imports from the eight Regions of Italy would likely be very minor, and economic impacts on U.S. entities, large and small, would be insignificant. Current low pork prices in the United States make it all the more probable that pork imports from the eight Regions in Italy, if they were to occur, would be extremely limited.

This proposed rule contains information collection and recordkeeping requirements. These requirements are described in the section of this document entitled ''Paperwork Reduction Act.''

Executive Order 12988

This proposed rule has been reviewed under Executive Order 12988, Civil Justice Reform. If this proposed rule is adopted: (1) All State and local laws and regulations that are inconsistent with this rule will be preempted; (2) no retroactive effect will be given to this rule; and (3) administrative proceedings will not be required before parties may file suit in court challenging this rule.

National Environmental Policy Act

We are preparing an environmental assessment in accordance with: (1) The National Environmental Policy Act of 1969, as amended (NEPA) (42 U.S.C. 4321 *et seq.*), (2) regulations of the Council on Environmental Quality for implementing the procedural provisions of NEPA (40 CFR parts 1500–1508), (3) USDA regulations implementing NEPA (7 CFR part 1b), and (4) APHIS' NEPA Implementing Procedures (7 CFR part 372). When the environmental assessment is completed, we will inform the public through a notice in the **Federal Register** that it is available.

Paperwork Reduction Act

In accordance with section 3507(d) of the Paperwork Reduction Act of 1995 (44 U.S.C. 3501 *et seq.*), the information collection or recordkeeping requirements included in this proposed rule have been submitted for approval to the Office of Management and Budget (OMB). Please send written comments to the Office of Information and Regulatory Affairs, OMB, Attention: Desk Officer for APHIS, Washington, DC 20503. Please state that your comments refer to Docket No. 98–090–1. Please send a copy of your comments to: (1) Docket No. 98–090–1, Regulatory Analysis and Development, PPD, APHIS, suite 3C03, 4700 River Road Unit 118, Riverdale, MD 20737–1238, and (2) Clearance Officer, OCIO, USDA, room 404-W, 14th Street and Independence Avenue SW., Washington, DC 20250. A comment to OMB is best assured of having its full effect if OMB receives it within 30 days of publication of this proposed rule.

Under this proposed rule, importers of breeding swine, pork and pork products, and swine semen from the region in the EU that we would recognize as one in which hog cholera is not known to exist would be required to include origin and movement certification with the imported commodity. Additionally, importers of breeding swine or swine semen would have to include the results of tests conducted on the imported swine or donor boars.

We are soliciting comments from the public (as well as affected agencies) concerning our proposed information collection and recordkeeping requirements. We need this outside input to help us:

(1) Evaluate whether the proposed information collection is necessary for the proper performance of our agency's functions, including whether the information will have practical utility;

(2) Evaluate the accuracy of our estimate of the burden of the proposed information collection, including the validity of the methodology and assumptions used;

(3) Enhance the quality, utility, and clarity of the information to be collected;

(4) Minimize the burden of the information collection on those who are to respond (such as through the use of appropriate automated, electronic,

mechanical, or other technological collection techniques or other forms of information technology, e.g., permitting electronic submission responses).

Estimate of burden: Public reporting burden for this collection of information is estimated to average 1 hour per response.

Respondents: Importers of swine, swine semen, and pork and pork products.

Estimated annual number of respondents: 30.

Estimated annual number of responses per respondent: 10.

Estimated annual number of responses: 300.

Estimate total annual burden on respondents: 300 hours.

Copies of this information collection can be obtained from: Clearance Officer, OCIO, USDA, room 404-W, 14th Street and Independence Avenue SW., Washington, DC 20250.

List of Subjects

9 CFR Part 92

Animal diseases, Imports.

9 CFR Part 94

Animal diseases, Imports, Livestock, Meat and meat products, Poultry and poultry products, Reporting and recordkeeping requirements.

9 CFR Part 98

Animal diseases, Imports.

Accordingly, we are proposing to amend 9 CFR parts 92, 94, and 98, as follows:

PART 92—IMPORTATION OF ANIMALS AND ANIMAL PRODUCTS: PROCEDURES FOR REQUESTING RECOGNITION OF REGIONS

1. The authority citation for part 92 would continue to read as follows:

Authority: 7 U.S.C. 1622; 19 U.S.C. 1306; 21 U.S.C. 102–105, 111, 114a, 134a, 134b, 134c, 134d, 134f, 135, 136, and 136a; 31 U.S.C. 9701; 7 CFR 2.22, 2.80, and 371.2(d).

2. In § 92.1, a definition of *European Union* would be added, in alphabetical order, to read as follows:

§ 92.1 Definitions.

* * * * *

European Union. The organization of Member States consisting of Austria, Belgium, Denmark, Finland, France, Germany, Greece, Italy, Luxembourg, The Netherlands, Portugal, Republic of Ireland, Spain, Sweden, and the United Kingdom (England, Scotland, Wales, the Isle of Man, and Northern Ireland).

* * * * *

3. A new § 92.3 would be added to read as follows:

§ 92.3 Movement restrictions.

Whenever the European Commission (EC) establishes a quarantine in the European Union in a region the Animal and Plant Health Inspection Service recognizes as one in which the disease is not known to exist and the EC imposes prohibitions or other restrictions on the movement of animals or animal products from the quarantined area in the European Union, such animals and animal products are prohibited importation into the United States.

PART 94—RINDERPEST, FOOT-AND-MOUTH DISEASE, FOWL PEST (FOWL PLAGUE), EXOTIC NEWCASTLE DISEASE, AFRICAN SWINE FEVER, HOG CHOLERA, AND BOVINE SPONGIFORM ENCEPHALOPATHY; PROHIBITED AND RESTRICTED IMPORTATIONS

4. The authority citation for part 94 would continue to read as follows:

Authority: 7 U.S.C. 147a, 150ee, 161, 162, and 450; 19 U.S.C. 1306; 21 U.S.C. 111, 114a, 134a, 134b, 134c, 134f, 136, and 136a; 31 U.S.C. 9701; 42 U.S.C. 4331 and 4332; 7 CFR 2.22, 2.80, and 371.2(d).

5. In § 94.1, paragraph (a)(2) would be amended by adding the word ''Greece,'' immediately after the words ''Isle of Man),'' and paragraph (a)(3) would be revised to read as follows:

§ 94.1 Regions where rinderpest or foot-and-mouth disease exists; importations prohibited.

(a) * * *

(3) The following regions are declared to be free of rinderpest but not foot-and-mouth disease: None.

* * * * *

6. In § 94.9, paragraph (a) would be revised to read as follows:

§ 94.9 Pork and pork products from regions where hog cholera exists.

(a) Hog cholera is known to exist in all regions of the world except Australia; Canada; Denmark; Fiji; Finland; Iceland; New Zealand; Norway; the Republic of Ireland; Sweden; Trust Territory of the Pacific Islands; the United Kingdom (England, Scotland, Wales, the Isle of Man, and Northern Ireland); and a single region in the European Union consisting of Austria, Belgium, France, Greece, Luxembourg, The Netherlands, Portugal, Spain, the country of Germany except for the Kreis Vechta in the Land of Lower Saxony, the Kreis Warendorf in the Land of Northrhine Westfalia, and the Kreis Altmarkkreis Salzwedel in the Land of Saxony-Anhalt, and the country of Italy except for the Island of Sardinia and the Regions of Emilia Romagna and Piemonte.[9]

* * * * *

7. In § 94.10, paragraph (a) would be amended by revising the first sentence to read as follows:

§ 94.10 Swine from regions where hog cholera exists.

(a) Hog cholera is known to exist in all regions of the world except Australia; Canada; Denmark; Fiji; Finland; Iceland; New Zealand; Norway; the Republic of Ireland; Sweden; Trust Territory of the Pacific Islands; the United Kingdom (England, Scotland, Wales, the Isle of Man, and Northern Ireland); and a single region in the European Union consisting of Austria, Belgium, France, Greece, Luxembourg, The Netherlands, Portugal, Spain, the country of Germany except for the Kreis Vechta in the Land of Lower Saxony, the Kreis Warendorf in the Land of Northrhine Westfalia, and the Kreis Altmarkkreis Salzwedel in the Land of Saxony-Anhalt, and the country of Italy except for the Island of Sardinia and the Regions of Emilia Romagna and Piemonte. * * *

* * * * *

§ 94.11 [Amended]

8. In § 94.11, paragraph (a) would be amended by adding the word ''Greece,'' immediately after the word ''Germany,'', by removing the words ''Great Britain (England, Scotland, Wales, and Isle of Man),'' and ''Northern Ireland,'', and by adding the words ''the United Kingdom (England, Scotland, Wales, the Isle of Man, and Northern Ireland),'' immediately after the word ''Switzerland,''.

9. In 94.12, paragraph (a) would be revised to read as follows:

§ 94.12 Pork and pork products from regions where swine vesicular disease exists.

(a) Swine vesicular disease is considered to exist in all regions of the world except Australia; Austria; The Bahamas; Belgium; Bulgaria; Canada; Central American countries; Chile; Denmark; Dominican Republic; Fiji; Finland; France; Germany; Greece; Greenland; Haiti; Hungary; Iceland; Luxembourg; Mexico; The Netherlands; New Zealand; Norway; Panama; Portugal; Republic of Ireland; Romania; Spain; Sweden; Switzerland; Trust Territories of the Pacific; the United Kingdom (England, Scotland, Wales, the Isle of Man, and Northern Ireland);

[9] See also other provisions of this part, parts 92, 95, and 96 of this chapter, and part 327 of this title for other prohibitions and restrictions on the importation of swine and swine products.

Yugoslavia; and the Regions in Italy of Abruzzi, Emilia Romagna, Friuli, Liguria, Marche, Molise, Piemonte, and Valle d'Aosta.

* * * * *

10. In § 94.13, the introductory text would be revised to read as follows:

§ 94.13 Restrictions on importation of pork or pork products from specified regions.

Austria; The Bahamas; Belgium; Bulgaria; Chile; Denmark; France; Germany; Hungary; Luxembourg; The Netherlands; Portugal; Republic of Ireland; Spain; Switzerland; the United Kingdom (England, Scotland, Wales, the Isle of Man, and Northern Ireland); Yugoslavia; and the Regions in Italy of Abruzzi, Emilia Romagna, Friuli, Liguria, Marche, Molise, Piemonte, and Valle d'Aosta are declared free of swine vesicular disease in § 94.12(a) of this part. These regions either supplement their national pork supply by the importation of fresh (chilled or frozen) pork from regions where swine vesicular disease is considered to exist; have a common border with such regions; or have trade practices that are less restrictive than are acceptable to the United States. Thus, the pork or pork products produced in such regions may be commingled with fresh (chilled or frozen) meat of animals from a region where swine vesicular disease is considered to exist, resulting in an undue risk of swine vesicular disease introduction into the United States. Therefore, pork or pork products and shipstores, airplane meals, and baggage containing such pork other than those articles regulated under part 95 or part 96 of this chapter, produced in such regions shall not be brought into the United States unless the following requirements are met in addition to other applicable requirements of part 327 of this title:

* * * * *

11. A new § 94.22 would be added to read as follows:

§ 94.22 Restrictions on the importation of swine, pork, and pork products from parts of the European Union.

In addition to meeting all other applicable provisions of this part, live swine, pork, and pork products imported from the region of the European Union consisting of Austria, Belgium, France, Greece, Luxembourg, The Netherlands, Portugal, Spain, the country of Germany except for the Kreis Vechta in the Land of Lower Saxony, the Kreis Warendorf in the Land of Northrhine Westfalia, and the Kreis Altmarkkreis Salzwedel in the Land of Saxony-Anhalt, and the country of Italy except for the Island of Sardinia and the Regions of Emilia Romagna and Piemonte must meet the following conditions:

(a) *Pork and pork products.* (1) The pork or pork products must not have been commingled with pork or pork products produced from swine from any region listed at that time in § 94.10(a) as a region in which hog cholera is known to exist;

(2) The swine from which the pork or pork products were produced must not have lived in a region listed at that time as one in which hog cholera is known to exist, and must not have transited such a region unless moved directly through such a region in a sealed means of conveyance with the seal determined to be intact upon arrival at the point of destination; and

(3) The pork and pork products must be accompanied by a certificate issued by an official of the national government for the region of origin who is authorized to issue the foreign meat inspection certificate required by § 327.4 of this title, stating that the provisions of paragraphs (a)(1) and (a)(2) of this section have been met.[17]

(b) *Live swine.* (1) The swine must be breeding swine and must not have lived in a region listed at that time in § 94.10(a) as a region in which hog cholera is known to exist, and must not have transited such a region unless moved directly through such a region in a sealed means of conveyance with the seal determined to be intact upon arrival at the point of destination;

(2) The swine must never have been commingled with swine that have been in a region listed at that time as one in which cholera is known to exist;

(3) No equipment or materials used in transporting the swine may have previously been used for transporting swine that do not meet the requirements of this section, unless the equipment or materials have first been cleaned and disinfected; and

(4) The swine must be accompanied by a certificate issued by a salaried veterinary officer of the national government of the country of origin, stating that the provisions of paragraphs (b)(1) through (b)(3) of this section have been met.[18]

(c) The certificates required by paragraphs (a)(3) and (b)(4) of this section must be presented by the importer or his or her agent to the collector of customs at the port of arrival, upon arrival of the swine, pork, or pork products at the port, for the use of the veterinary inspector at the port of entry.

[17] The certification required may be placed on the foreign meat inspection certificate required by § 327.4 of this title or may be contained in a separate document.

[18] The certification required may be placed on the certificate required by § 93.505(a) of this chapter or may be contained in a separate document.

PART 98—IMPORTATION OF CERTAIN ANIMAL EMBRYOS AND ANIMAL SEMEN

12. The authority citation for part 98 would continue to read as follows:

Authority: 7 U.S.C. 1622; 19 U.S.C. 1306; 21 U.S.C. 103–105, 111, 134a, 134b, 134c, 134d, 134f, 136, and 136a; 31 U.S.C. 9701; 7 CFR 2.22, 2.80, and 371.2(d).

13. In part 98, a new § 98.38 would be added to read as follows:

§ 98.38 Restrictions on the importation of swine semen from parts of the European Union.

In addition to meeting all other applicable provisions of this part, swine semen imported from the region of the European Union consisting of Austria, Belgium, France, Greece, Luxembourg, The Netherlands, Portugal, Spain, the country of Germany except for the Kreis Vechta in the Land of Lower Saxony, the Kreis Warendorf in the Land of Northrhine Westfalia, and the Kreis Altmarkkreis Salzwedel in the Land of Saxony-Anhalt, and the country of Italy except for the Island of Sardinia and the Regions of Emilia Romagna and Piemonte must meet the following conditions:

(a) The semen must come only from a semen collection center approved for export by the veterinary services of the national government of the country of origin;

(b) The donor boar must not have lived in a region listed at that time in § 94.10 as one in which hog cholera is known to exist, and must not have transited such a region unless moved directly through such a region in a sealed means of conveyance with the seal determined to be intact upon arrival at the point of destination;

(c) The donor boar must never have been commingled with swine that have been in a region listed at that time as a region in which hog cholera is known to exist;

(d) The donor boar must be held in isolation for at least 30 days prior to entering the semen collection center;

(e) No more than 30 days prior to being held in isolation as required by paragraph (b) of this section, the donor boar must be tested with negative results with a hog cholera test approved by the International Office of Epizootics;

(f) No equipment or materials used in transporting the donor boar from the farm of origin to the semen collection center may have been used previously

for transporting swine that do not meet the requirements of this section, unless such equipment or materials has first been cleaned and disinfected;

(g) The donor boar must be observed at the semen collection center by the center veterinarian, and exhibit no clinical signs of hog cholera;

(h) Before the semen is exported to the United States, the donor boar must be held at the semen collection center for at least 40 days following collection of the semen, and, along with all other swine at the semen collection center, exhibit no clinical signs of hog cholera; and

(i) The semen must be accompanied to the United States by a certificate issued by a salaried veterinary officer of the national government of the country of origin, stating that the provisions of paragraphs (a) through (h) of this section have been met.[3]

Done in Washington, DC, the 21st day of June 1999.

Craig A. Reed,

Administrator, Animal and Plant Health Inspection Service.

[FR Doc. 99–16172 Filed 6–22–99; 4:06 pm]

BILLING CODE 3410–34–P

[3] The certification required may be placed on the certificate required under § 98.35(c) or may be contained in a separate document.

DEPARTMENT OF TRANSPORTATION

Federal Aviation Administration

14 CFR Part 39

[Docket No. 99–NM–53–AD]

RIN 2120–AA64

Airworthiness Directives; Boeing Model 727 Series Airplanes

AGENCY: Federal Aviation Administration, DOT.

ACTION: Notice of proposed rulemaking (NPRM).

SUMMARY: This document proposes the adoption of a new airworthiness directive (AD) that is applicable to certain Boeing Model 727 series airplanes. This proposal would require repetitive structural inspections of certain aging airplanes, and repair, if necessary. This proposal also provides for optional terminating action for the repetitive inspections. This proposal is prompted by reports of incidents involving fatigue cracking and corrosion in transport category airplanes that are approaching or have exceeded their economic design service goal. The actions specified by the proposed AD are intended to prevent degradation of the structural capabilities of the affected airplanes. This proposal relates to the recommendations of the Airworthiness Assurance Task Force assigned to review Model 727 series airplanes, which indicate that, to assure long term continued operational safety, various structural inspections should be accomplished.

DATES: Comments must be received by August 9, 1999.

ADDRESSES: Submit comments in triplicate to the Federal Aviation Administration (FAA), Transport Airplane Directorate, ANM–114, Attention: Rules Docket No. 99–NM–53–AD, 1601 Lind Avenue, SW., Renton, Washington 98055–4056. Comments may be inspected at this location between 9:00 a.m. and 3:00 p.m., Monday through Friday, except Federal holidays.

The service information referenced in the proposed rule may be obtained from Boeing Commercial Airplane Group, P.O. Box 3707, Seattle, Washington 98124–2207. This information may be examined at the FAA, Transport Airplane Directorate, 1601 Lind Avenue, SW., Renton, Washington.

FOR FURTHER INFORMATION CONTACT: Walter Sippel, Aerospace Engineer, Airframe Branch, ANM–120S, FAA, Transport Airplane Directorate, Seattle Aircraft Certification Office, 1601 Lind Avenue, SW., Renton, Washington 98055–4056; telephone (425) 227–2774; fax (425) 227–1181.

SUPPLEMENTARY INFORMATION:

Comments Invited

Interested persons are invited to participate in the making of the proposed rule by submitting such written data, views, or arguments as they may desire. Communications shall identify the Rules Docket number and be submitted in triplicate to the address specified above. All communications received on or before the closing date for comments, specified above, will be considered before taking action on the proposed rule. The proposals contained in this notice may be changed in light of the comments received.

Comments are specifically invited on the overall regulatory, economic, environmental, and energy aspects of the proposed rule. All comments submitted will be available, both before and after the closing date for comments, in the Rules Docket for examination by interested persons. A report summarizing each FAA-public contact concerned with the substance of this proposal will be filed in the Rules Docket.

Commenters wishing the FAA to acknowledge receipt of their comments submitted in response to this notice must submit a self-addressed, stamped postcard on which the following statement is made: ''Comments to Docket Number 99–NM–53–AD.'' The postcard will be date stamped and returned to the commenter.

Availability of NPRMs

Any person may obtain a copy of this NPRM by submitting a request to the FAA, Transport Airplane Directorate, ANM–114, Attention: Rules Docket No. 99–NM–53–AD, 1601 Lind Avenue, SW., Renton, Washington 98055–4056.

Discussion

In April 1988, a high-cycle Boeing Model 737 suffered major structural damage in flight. Investigation revealed that the airplane had numerous fatigue cracks and a great deal of corrosion. This incident prompted the FAA to sponsor a conference on aging airplanes, which was attended by members of the aviation industry, other regulatory authorities, and the general public. The conferees agreed that, because of the huge increase in air travel, the relatively slow pace of new airplane production, and the apparent economic feasibility of operating older technology airplanes, operators will continue to fly aging airplanes rather than retire them. Because of the problems revealed by the accident described above, the consensus was that this aging fleet needed more attention and maintenance to ensure its continued operational safety.

The Air Transport Association (ATA) of America and the Aerospace Industries Association (AIA) of America committed to identifying and implementing procedures to ensure continuing structural airworthiness of aging transport category airplanes. An Airworthiness Assurance Task Force, with representatives from the aircraft operators, manufacturers, regulatory authorities, and other aviation representatives, was established in August 1988. The objective of the Task Force was to sponsor ''Working Groups'' to:

1. Select service bulletins, applicable to each airplane model in the transport fleet, to be recommended for mandatory modification of aging airplanes,
2. Develop corrosion-directed inspections and prevention programs,
3. Review the adequacy of each operator's structural maintenance program,
4. Review and update the Supplemental Structural Inspection Documents (SSID), and
5. Assess repair quality.

The Working Group assigned to review the Boeing Model 727 series airplanes completed its work on Item (2) in July 1989 and developed a baseline program for controlling corrosion problems that may jeopardize the continued airworthiness of the Boeing Model 727 fleet. This program is contained in Boeing Document Number D6–54929, ''Aging Airplane Corrosion Prevention and Control Program—Model 727,'' dated July 28, 1989. The FAA issued AD 90–25–03, Amendment 39–6787 (55 FR 49258, November 27, 1990), which requires implementation of a corrosion prevention and control program.

The Working Group completed a portion of its work on Item (1), above, in March 1989. The Working Group's proposal is contained in Boeing Document Number D6–54860, ''Aging Airplane Service Bulletin Structural Modification Program—Model 727,'' Revision C, dated December 11, 1989. The FAA issued AD 90–06–09, Amendment 39–6488 (55 FR 8370, March 7, 1990), which requires the installation of the structural modifications identified in that document.

The action being proposed herein follows from the ongoing activities of the Working Group relative to Item (1). The Working Group has identified certain service difficulties that warrant mandatory inspections of the airplane. The Working Group considers that these service difficulties can be controlled safely in aging airplanes by inspections and that because of the safety implications, the inspections should be mandatory to assure that all operators perform them. Typically, the addressed unsafe conditions have occurred infrequently on aging airplanes, and the Working Group has a very high degree of confidence in the ability of an inspection program to detect the damage before it adversely affects safety.

The Working Group reviewed 286 service bulletins related to the long term operation of the Model 727 series airplanes. Twelve of these service bulletins were recommended to the FAA for mandatory inspection action to ensure the successful long term operation of Model 727 series airplanes. The conditions addressed by these service bulletins, if not corrected, could result in degradation of the structural capabilities of the affected airplanes. The FAA has concurred with the Working Group's recommendations and has determined that AD action to mandate the inspections is warranted to assure the continued airworthiness of the Model 727 fleet.

Explanation of Relevant Service Information

The FAA has reviewed and approved Boeing Service Bulletin 727–57–0127, Revision 3, dated August 24, 1989, which describes procedures for repetitive dye penetrant inspections of certain wing ribs at the rib-to-stringer attachment, and repair, if necessary. The service bulletin also describes procedures for the accomplishment of a preventative modification, which would eliminate the need for the repetitive inspections.

Boeing Standard Overhaul Practices Manual D6–51702, Chapter 20–20–02, Revision 79, dated March 1, 1999, also describes procedures for the accomplishment of the dye penetrant inspections.

Boeing Commercial Jet Nondestructive Test Manual, Chapter 51–00–00, Part 6, dated August 5, 1997, describes procedures for a high frequency eddy current inspection to detect cracking of certain wing ribs at the rib-to-stringer attachment.

Accomplishment of the actions specified in the service bulletin, the overhaul manual, and the NDT Manual is intended to adequately address the identified unsafe condition.

Other Relevant Rulemaking

AD 94–07–08, amendment 39–8866 (59 FR 14545, March 29, 1994) currently requires initial structural inspections only of certain wing ribs at the rib-to-stringer attachment, as specified in the Boeing Document Number D6–54860, ''Aging Airplane Service Bulletin Structural Modification and Inspection Program—Model 727,'' Revision G, dated March 5, 1993. That AD inadvertently omitted the requirement to mandate repetitive inspections of certain wing ribs at the rib-to-stringer attachment. This proposed AD would mandate those repetitive inspections to detect cracks of certain structural components. In addition, the repetitive inspection requirement in this proposal would be terminated following accomplishment of the modification required by AD 94–05–04, amendment 39–8842 (59 FR 13442, March 22, 1994) as specified in Boeing Service Bulletin 727–57–0127, Revision 3, dated August 24, 1989. That AD requires incorporation of certain structural modifications. This proposed AD would not affect the current requirements of the AD's described previously.

Explanation of Requirements of Proposed Rule

Since an unsafe condition has been identified that is likely to exist or develop on other products of this same type design, the proposed AD would require accomplishment of the repetitive inspections, and repair, if necessary, as specified in the overhaul manual, NDT manual, and service bulletin described previously, except as discussed below. The proposed AD also provides for optional terminating action, which would terminate the repetitive inspections.

Differences Between Proposed Rule and Service Bulletin

Operators should note that, unlike the procedures described in the service bulletin, this proposed AD would require the applicable inspection to be repeated at intervals not to exceed 14,000 flight cycles, regardless of detection of cracking. The FAA has determined that, because of the safety implications and consequences associated with fatigue cracking, repetitive inspections are necessary until accomplishment of the modification required by AD 94–05–04, in order to adequately ensure the safety of the transport airplane fleet.

Operators also should note that, although the service bulletin describes procedures for accomplishment of a dye penetrant inspection only, this proposed AD would include the option of accomplishment of a either a dye penetrant inspection or a high frequency eddy current inspection to detect cracking of certain wing ribs at the rib-to-stringer attachment. This option gives operators greater flexibility for detecting cracking in a timely manner.

Cost Impact

There are approximately 975 airplanes of the affected design in the worldwide fleet. The FAA estimates that 538 airplanes of U.S. registry would be affected by this proposed AD, that it would take approximately 300 work hours per airplane to accomplish the proposed inspection, and that the average labor rate is $60 per work hour. Based on these figures, the cost impact of the inspection proposed by this AD on U.S. operators is estimated to be $9,684,000, or $18,000 per airplane, per inspection cycle.

The cost impact figure discussed above is based on assumptions that no operator has yet accomplished any of the proposed requirements of this AD action, and that no operator would accomplish those actions in the future if this AD were not adopted.

Should an operator elect to accomplish the optional terminating action rather than continue the repetitive inspections, it would take approximately 900 work hours per

airplane to accomplish the modification, at an average labor rate of $60 per work hour. Required parts will cost approximately $31,144 per airplane. Based on these figures, the cost impact of this optional terminating action is estimated to be $85,144 per airplane.

Regulatory Impact

The regulations proposed herein would not have substantial direct effects on the States, on the relationship between the national government and the States, or on the distribution of power and responsibilities among the various levels of government. Therefore, in accordance with Executive Order 12612, it is determined that this proposal would not have sufficient federalism implications to warrant the preparation of a Federalism Assessment.

For the reasons discussed above, I certify that this proposed regulation (1) is not a ''significant regulatory action'' under Executive Order 12866; (2) is not a ''significant rule'' under the DOT Regulatory Policies and Procedures (44 FR 11034, February 26, 1979); and (3) if promulgated, will not have a significant economic impact, positive or negative, on a substantial number of small entities under the criteria of the Regulatory Flexibility Act. A copy of the draft regulatory evaluation prepared for this action is contained in the Rules Docket. A copy of it may be obtained by contacting the Rules Docket at the location provided under the caption **ADDRESSES**.

List of Subjects in 14 CFR Part 39

Air transportation, Aircraft, Aviation safety, Safety.

The Proposed Amendment

Accordingly, pursuant to the authority delegated to me by the Administrator, the Federal Aviation Administration proposes to amend part 39 of the Federal Aviation Regulations (14 CFR part 39) as follows:

PART 39—AIRWORTHINESS DIRECTIVES

1. The authority citation for part 39 continues to read as follows:

Authority: 49 U.S.C. 106(g), 40113, 44701.

§ 39.13 [Amended]

2. Section 39.13 is amended by adding the following new airworthiness directive:

Boeing: Docket 99–NM–53–AD.

Applicability: Model 727–100, –100C, and –200 series airplanes, line numbers 1 through 1214 inclusive; certificated in any category; on which the modification required by AD 94–05–04, amendment 39–8842, as specified in Boeing Service Bulletin 727–57–0127, Revision 3, dated August 24, 1989, has not been accomplished.

Note 1: This AD applies to each airplane identified in the preceding applicability provision, regardless of whether it has been otherwise modified, altered, or repaired in the area subject to the requirements of this AD. For airplanes that have been modified, altered, or repaired so that the performance of the requirements of this AD is affected, the owner/operator must request approval for an alternative method of compliance in accordance with paragraph (e) of this AD. The request should include an assessment of the effect of the modification, alteration, or repair on the unsafe condition addressed by this AD; and, if the unsafe condition has not been eliminated, the request should include specific proposed actions to address it.

Compliance: Required as indicated, unless accomplished previously.

To prevent degradation of the structural capabilities of the affected airplanes, accomplish the following:

Initial Inspection

(a) Within 2,000 flight cycles after the effective date of this AD, unless accomplished within the last 12,000 flight cycles in accordance with AD 94–07–08, amendment 39–8866; accomplish paragraph (a)(1) or (a)(2) of this AD, as applicable.

(1) Perform a dye penetrant inspection to detect cracking of certain wing ribs at the rib-to-stringer attachment, in accordance with Boeing Service Bulletin 727–57–0127, Revision 3, dated August 24, 1989; and Boeing Standard Overhaul Practices Manual D6–51702, Chapter 20–20–02, Revision 79, dated March 1, 1999.

(2) Perform a high frequency eddy current inspection to detect cracking of certain wing ribs at the rib-to-stringer attachment, as specified in Boeing Service Bulletin 727–57–0127, Revision 3, dated August 24, 1989; in accordance with the procedures specified in Boeing Commercial Jet Nondestructive Test Manual, Chapter 51–00–00, Part 6, dated August 5, 1997.

Repetitive Inspections and Corrective Action

(b) If no crack is detected during any inspection required by paragraph (a) of this AD, repeat the applicable inspection thereafter at intervals not to exceed 14,000 flight cycles.

(c) If any crack is detected during any inspection required by paragraph (a) of this AD, prior to further flight, repair in accordance with Boeing Service Bulletin 727–57–0127, Revision 3, dated August 24, 1989. Repeat the applicable inspection thereafter at intervals not to exceed 14,000 flight cycles, following accomplishment of the repair.

Terminating Action

(d) Accomplishment of the structural modification required by paragraph (a) of AD 94–05–04, amendment 39–8842, as specified in Boeing Service Bulletin 727–57–0127, Revision 3, dated August 24, 1989, constitutes terminating action for the requirements of this AD.

Alternative Methods of Compliance

(e) An alternative method of compliance or adjustment of the compliance time that provides an acceptable level of safety may be used if approved by the Manager, Seattle Aircraft Certification Office (ACO), FAA, Transport Airplane Directorate. Operators shall submit their requests through an appropriate FAA Principal Maintenance Inspector, who may add comments and then send it to the Manager, Seattle ACO.

Note 2: Information concerning the existence of approved alternative methods of compliance with this AD, if any, may be obtained from the Seattle ACO.

Special Flight Permits

(f) Special flight permits may be issued in accordance with sections 21.197 and 21.199 of the Federal Aviation Regulations (14 CFR 21.197 and 21.199) to operate the airplane to a location where the requirements of this AD can be accomplished.

Issued in Renton, Washington, on June 18, 1999.

Dorenda D. Baker,

Acting Manager, Transport Airplane Directorate, Aircraft Certification Service.

[FR Doc. 99–16158 Filed 6–24–99; 8:45 am]

BILLING CODE 4910–13–U

DEPARTMENT OF TRANSPORTATION

Federal Aviation Administration

14 CFR Part 39

[Docket No. 98–NM–35–AD]

RIN 2120–AA64

Airworthiness Directives; Lockheed Model L–1011–385 Series Airplanes

AGENCY: Federal Aviation Administration, DOT.

ACTION: Notice of proposed rulemaking (NPRM).

SUMMARY: This document proposes the adoption of a new airworthiness directive (AD) that is applicable to all Lockheed Model L–1011–385 series airplanes. This proposal would require repetitive inspections to detect corrosion or fatigue cracking of certain structural elements of the airplane; corrective action, if necessary; and incorporation of certain structural modifications. This proposal is prompted by new recommendations related to incidents of fatigue cracking and corrosion in transport category airplanes that are approaching or have exceeded their economic design goal. The actions specified by the proposed AD are intended to prevent corrosion or fatigue cracking of certain structural elements, which could result in reduced structural integrity of the airplane.

DATES: Comments must be received by August 9, 1999.

ADDRESSES: Submit comments in triplicate to the Federal Aviation Administration (FAA), Transport Airplane Directorate, ANM–114, Attention: Rules Docket No. 98–NM–35–AD, 1601 Lind Avenue, SW., Renton, Washington 98055–4056. Comments may be inspected at this location between 9:00 a.m. and 3:00 p.m., Monday through Friday, except Federal holidays.

The service information referenced in the proposed rule may be obtained from Lockheed Martin Aircraft & Logistics Center, 120 Orion Street, Greenville, South Carolina 29605. This information may be examined at the FAA, Transport Airplane Directorate, 1601 Lind Avenue, SW., Renton, Washington; or at the FAA, Small Airplane Directorate, Atlanta Aircraft Certification Office, One Crown Center, 1895 Phoenix Boulevard, suite 450, Atlanta, Georgia.

FOR FURTHER INFORMATION CONTACT: Thomas Peters, Aerospace Engineer, Systems and Flight Test Branch, ACE–116A, FAA, Small Airplane Directorate, Atlanta Aircraft Certification Office, One Crown Center, 1895 Phoenix Boulevard, suite 450, Atlanta, Georgia 30349; telephone (770) 703–6063; fax (770) 703–6097.

SUPPLEMENTARY INFORMATION:

Comments Invited

Interested persons are invited to participate in the making of the proposed rule by submitting such written data, views, or arguments as they may desire. Communications shall identify the Rules Docket number and be submitted in triplicate to the address specified above. All communications received on or before the closing date for comments, specified above, will be considered before taking action on the proposed rule. The proposals contained in this notice may be changed in light of the comments received.

Comments are specifically invited on the overall regulatory, economic, environmental, and energy aspects of the proposed rule. All comments submitted will be available, both before and after the closing date for comments, in the Rules Docket for examination by interested persons. A report summarizing each FAA-public contact concerned with the substance of this proposal will be filed in the Rules Docket.

Commenters wishing the FAA to acknowledge receipt of their comments submitted in response to this notice must submit a self-addressed, stamped postcard on which the following statement is made: ''Comments to Docket Number 98–NM–35–AD.'' The postcard will be date stamped and returned to the commenter.

Availability of NPRMs

Any person may obtain a copy of this NPRM by submitting a request to the FAA, Transport Airplane Directorate, ANM–114, Attention: Rules Docket No. 98–NM–35–AD, 1601 Lind Avenue, SW., Renton, Washington 98055–4056.

Discussion

In April 1988, a transport category airplane managed to land after tiny cracks in rivet holes in the upper fuselage linked together, causing structural failure and explosive decompression. An 18-foot section ripped from the fuselage. This accident focused greater attention on the problem of aging aircraft.

Subsequently, in June 1988, the FAA sponsored a conference on aging airplane issues, which was attended by representatives of the aviation industry from around the world. It became obvious that, because of the tremendous increase in air travel, the relatively slow pace of new airplane production, and the apparent economic feasibility of operating older technology airplanes rather than retiring them, increased attention needed to be focused on this aging fleet and maintaining its continued operational safety.

The Air Transport Association (ATA) of America and the Aerospace Industries Association (AIA) of America committed to identifying and implementing procedures to ensure continuing structural airworthiness of aging transport category airplanes. The Airworthiness Assurance Working Group (AAWG), with representatives from the aircraft operators, manufacturers, regulatory authorities, and other aviation representatives, was originally established in August 1988. The objective of the AAWG was to sponsor ''Task Groups'' to:

1. Select service bulletins, applicable to each airplane model in the transport fleet, to be recommended for mandatory modification of aging airplanes,
2. Develop corrosion-directed inspections and prevention programs,
3. Review the adequacy of each operator's structural maintenance program,
4. Review and update the Supplemental Structural Inspection Documents (SSID),
5. Assess repair quality.

The Structures Task Group (STG) assigned to review the Lockheed Model L–1011–385 series airplanes was formed in 1988, and included operators of Model L–1011–385 series airplanes, Lockheed, the FAA, and observers from regulatory agencies. Certain recommendations made by the STG (pursuant to Item 1., described previously) are contained in Lockheed Service Bulletin 093–51–035, Revision 1, dated December 16, 1991. The FAA previously issued AD 94–05–01, amendment 39–8839 (59 FR 10275, March 4, 1994), to require the structural inspections and the modifications recommended in that document.

Since the issuance of that AD, the STG has recommended accomplishment of certain other structural inspections to detect corrosion or fatigue cracking of certain structural elements of the airplane, and incorporation of certain structural modifications. Corrosion or fatigue cracking of certain structural elements, if not detected and corrected, could result in reduced structural integrity of the airplane.

Explanation of Relevant Service Information

Lockheed has issued Service Bulletin 093–51–040, Revision 1, dated October 1, 1997 (hereinafter referred to as the ''Collector Service Bulletin''). The Collector Service Bulletin describes certain repetitive inspections to detect corrosion or fatigue cracking of certain structural elements of the airplane, including the area around the two aft passengers doors and the fuselage-to-underwing longeron area at butt line 94.5. The Collector Service Bulletin also describes structural modifications of various elements of the airplane that have been recommended by the STG, including modification of the retract actuators of the main landing gear, modification of the bulkhead at fuselage station 1363, and replacement of the wing rear spar web (for Model L–1011–385–3 series airplanes). The Collector Service Bulletin also references appropriate sources of accomplishment instructions for the structural inspections and modifications.

The FAA has reviewed and approved the Collector Service Bulletin. Accomplishment of the actions specified in the Collector Service Bulletin is intended to adequately address the identified unsafe condition.

Explanation of Requirements of Proposed Rule

Since an unsafe condition has been identified that is likely to exist or develop on other products of this same type design, the proposed AD would require accomplishment of the actions specified in the service bulletin described previously, except as discussed below.

Other Relevant Rulemaking

The FAA previously has issued AD 98–10–14, amendment 39–10526 (63 FR 26966, May 15, 1998), applicable to all Lockheed Model L–1011–385 series airplanes, to require various inspections to detect cracking of certain areas of the rear spar caps, web, skin, and certain fastener holes; and follow-on actions. Accomplishment of the terminating modification listed in Lockheed Service Bulletin 093–57–215 (referenced in Table II of the Collector Service Bulletin), as required by paragraph (e) of this proposed AD; would constitute terminating action for the inspection requirements of AD 98–10–14 for the affected airplanes.

Differences Between This Proposed Rule and the Service Bulletin

Operators should note that Table II of the Collector Service Bulletin references structural inspections specified in Lockheed Service Bulletins 093–53–268, Revision 1, dated July 2, 1996, and 093–53–272, Revision 1, dated March 17, 1997. However, the FAA previously issued AD 99–08–20, amendment 39–11128 (64 FR 18324, April 14, 1999), applicable to all Lockheed Model L–1011–385 series airplanes, to require the structural inspections specified in Lockheed Service Bulletins 093–53–268, Revision 1, and 093–53–272, dated November 12, 1996. The FAA has determined that the procedures described in Lockheed Service Bulletin 093–53–272, Revision 1, are substantially similar to those specified in the original issue of that service bulletin. Therefore, paragraph (b) of this proposed AD specifies that structural inspections in accordance with Lockheed Service Bulletins 093–53–268, Revision 1, and 093–53–272, Revision 1, would not be required by this AD.

Operators also should note that the Collector Service Bulletin specifies that installation of the modifications in Lockheed Service Bulletins 093–53–268, Revision 1, and 093–53–272, terminates the inspections specified in Lockheed Service Bulletins 093–53–268, Revision 1, and 093–53–272, Revision 1. However, this proposed AD specifies that installation of those modifications does not constitute terminating action for the subject inspections. AD 99–08–20 does not provide for termination of the inspections by installation of the modifications, though that AD does specify that inspections may be deferred for 18,000 landings, if modifications in accordance with Lockheed Service Bulletins 093–53–268, Revision 1, and 093–53–272 are accomplished.

Operators also should note that, for airplanes that have exceeded the later of the inspection thresholds specified in Lockheed Service Bulletin 093–57–203, Revision 5, dated April 22, 1996, the Collector Service Bulletin specifies a grace period of 5 years or 5,000 flight cycles after April 11, 1996 (the initial release date of Lockheed Service Bulletin 093–57–215), for accomplishment of the terminating modification described in Lockheed Service Bulletin 093–57–215, dated April 11, 1996. This proposed rule specifies a grace period for that modification of 2 years or 2,000 flight cycles after the effective date of this AD. The proposed grace period was developed by taking into account the manufacturer's recommended grace period of five years after April 11, 1996, as well as the length of time that is normally required for the rulemaking process to be completed. In consideration of both of these factors, the FAA finds that a grace period of 2 years or 2,000 flight cycles after the effective date of the AD is adequate to ensure the continued safety of the transport airplane fleet. The FAA also finds that such a grace period will provide operators with slightly more time than what was specified in the Collector Service Bulletin to accomplish the terminating modification.

Cost Impact

There are approximately 214 airplanes of the affected design in the worldwide fleet. The FAA estimates that 107 airplanes of U.S. registry would be affected by this proposed AD.

It would take approximately 315 work hours per airplane to accomplish the proposed inspections, at an average labor rate of $60 per work hour. Based on these figures, the cost impact of the inspections proposed by this AD on U.S. operators is estimated to be $2,022,300, or $18,900 per airplane, per inspection cycle.

It would take approximately 3,385 work hours per airplane to accomplish the proposed modifications, at an average labor rate of $60 per work hour. Required parts would cost approximately $242,000 per airplane. Based on these figures, the cost impact of the modifications proposed by this AD on U.S. operators is estimated to be $47,625,700, or $445,100 per airplane.

The cost impact figures discussed above are based on assumptions that no operator has yet accomplished any of the proposed requirements of this AD action, and that no operator would accomplish those actions in the future if this AD were not adopted.

Regulatory Impact

The regulations proposed herein would not have substantial direct effects on the States, on the relationship between the national government and the States, or on the distribution of power and responsibilities among the various levels of government. Therefore, in accordance with Executive Order 12612, it is determined that this proposal would not have sufficient federalism implications to warrant the preparation of a Federalism Assessment.

For the reasons discussed above, I certify that this proposed regulation (1) is not a ''significant regulatory action'' under Executive Order 12866; (2) is not a ''significant rule'' under the DOT Regulatory Policies and Procedures (44 FR 11034, February 26, 1979); and (3) if promulgated, will not have a significant economic impact, positive or negative, on a substantial number of small entities under the criteria of the Regulatory Flexibility Act. A copy of the draft regulatory evaluation prepared for this action is contained in the Rules Docket. A copy of it may be obtained by contacting the Rules Docket at the location provided under the caption **ADDRESSES.**

List of Subjects in 14 CFR Part 39

Air transportation, Aircraft, Aviation safety, Safety.

The Proposed Amendment

Accordingly, pursuant to the authority delegated to me by the Administrator, the Federal Aviation Administration proposes to amend part 39 of the Federal Aviation Regulations (14 CFR part 39) as follows:

PART 39—AIRWORTHINESS DIRECTIVES

1. The authority citation for part 39 continues to read as follows:

Authority: 49 U.S.C. 106(g), 40113, 44701.

§ 39.13 [Amended]

2. Section 39.13 is amended by adding the following new airworthiness directive:

Lockheed: Docket 98–NM–35–AD.

Applicability: All Model L–1011–385 series airplanes, certificated in any category.

Note 1: This AD applies to each airplane identified in the preceding applicability provision, regardless of whether it has been modified, altered, or repaired in the area subject to the requirements of this AD. For airplanes that have been modified, altered, or repaired so that the performance of the requirements of this AD is affected, the owner/operator must request approval for an alternative method of compliance in accordance with paragraph (f) of this AD. The request should include an assessment of the

effect of the modification, alteration, or repair on the unsafe condition addressed by this AD; and, if the unsafe condition has not been eliminated, the request should include specific proposed actions to address it.

Compliance: Required as indicated, unless accomplished previously.

To prevent corrosion or fatigue cracking of certain structural elements, which could result in reduced structural integrity of the airplane, accomplish the following:

Inspections

(a) Except as provided by paragraph (b) of this AD, perform structural inspections to detect corrosion or fatigue cracking of certain structural elements of the airplane, in accordance with the applicable service bulletins listed under ''Service Bulletin Number, Revision, and Date'' in Tables I and II of Lockheed Service Bulletin 093–51–040, Revision 1, dated October 1, 1997. Perform the initial inspections at the later of the times specified in paragraphs (a)(1) and (a)(2) of this AD. Thereafter, repeat each inspection at an interval not to exceed that specified in the applicable service bulletin.

(1) Prior to the threshold specified in the individual service bulletin listed in Table I or II of Lockheed Service Bulletin 093–51–040, Revision 1, as applicable.

(2) Within one repetitive interval after the effective date of this AD, as specified in the individual service bulletin listed in Table I or II of Lockheed Service Bulletin 093–51–040, Revision 1, as applicable.

(b) The structural inspections specified in Lockheed Service Bulletins 093–53–268, Revision 1, dated July 2, 1996, and 093–53–272, Revision 1, dated March 17, 1997; as listed in Table II of Lockheed Service Bulletin 093–51–040, Revision 1, dated October 1, 1997; are not required by this AD. The inspections specified in these service bulletins are required by AD 99–08–20, amendment 39–11128.

Corrective Action

(c) If any cracking is detected during any inspection required by paragraph (a) of this AD, prior to further flight, accomplish the actions specified in paragraph (c)(1), (c)(2), (c)(3), or (c)(4) of this AD.

(1) Repair in accordance with the applicable service bulletin referenced in Table I or II of Lockheed Service Bulletin 093–51–040, Revision 1, dated October 1, 1997.

(2) Repair in accordance with the applicable section of the Lockheed L–1011 Structural Repair Manual.

(3) Accomplish the terminating modification in accordance with the applicable service bulletin referenced in Table I or II of Lockheed Service Bulletin 093–51–040, Revision 1, dated October 1, 1997.

(4) Repair in accordance with a method approved by the Manager, Atlanta Aircraft Certification Office (ACO), FAA, Small Airplane Directorate.

Terminating Action

(d) Install the terminating modification referenced in each service bulletin listed in Table II of Lockheed Service Bulletin 093–51–040, Revision 1, dated October 1, 1997; in accordance with the applicable service bulletin listed under ''Service Bulletin Number, Revision, and Date'' in Table II of Lockheed Service Bulletin 093–51–040, Revision 1. Except as provided by paragraph (e) of this AD, install each modification at the later of the times specified in paragraphs (d)(1) and (d)(2) of this AD. Such installation constitutes terminating action for the applicable structural inspection required by paragraph (a) of this AD.

Note 2: Installation of the terminating modifications specified in Lockheed Service Bulletin 093–53–268, Revision 1, dated July 2, 1996, and Lockheed Service Bulletin 093–53–272, dated November 12, 1996, does not constitute terminating action for the repetitive inspection requirements of AD 99–08–20, amendment 39–11128.

(1) Prior to the threshold specified in the applicable service bulletin listed in Table II of Lockheed Service Bulletin 093–51–040, Revision 1.

(2) Within 5 years or 5,000 flight cycles after the effective date of this AD, whichever occurs first.

(e) At the later of the times specified in paragraphs (e)(1) and (e)(2) of this AD: Install the terminating modification listed in Lockheed Service Bulletin 093–57–215, as referenced in Table II of Lockheed Service Bulletin 093–51–040, Revision 1, dated October 1, 1997. Such installation constitutes terminating action for the inspections required by AD 98–10–14, amendment 39–10526.

(1) Prior to the threshold specified in Lockheed Service Bulletin 093–57–203, Revision 5, dated April 22, 1996.

(2) Within 2 years or 2,000 flight cycles after the effective date of this AD, whichever occurs first.

Alternative Methods of Compliance

(f) An alternative method of compliance or adjustment of the compliance time that provides an acceptable level of safety may be used if approved by the Manager, Atlanta ACO. Operators shall submit their requests through an appropriate FAA Principal Maintenance Inspector, who may add comments and then send it to the Manager, Atlanta ACO.

Note 3: Information concerning the existence of approved alternative methods of compliance with this AD, if any, may be obtained from the Atlanta ACO.

Special Flight Permits

(g) Special flight permits may be issued in accordance with sections 21.197 and 21.199 of the Federal Aviation Regulations (14 CFR 21.197 and 21.199) to operate the airplane to a location where the requirements of this AD can be accomplished.

Issued in Renton, Washington, on June 18, 1999.

Kalene C. Yanamura,

Acting Manager, Transport Airplane Directorate, Aircraft Certification Service.

[FR Doc. 99–16157 Filed 6–24–99; 8:45 am]

BILLING CODE 4910–13–U

DEPARTMENT OF THE INTERIOR

Bureau of Indian Affairs

25 CFR Part 20

RIN 1076–AD95

Financial Assistance and Social Services Programs

AGENCY: Bureau of Indian Affairs, Interior.

ACTION: Proposed rule; extension of comment period.

SUMMARY: The comment period on the Bureau of Indian Affairs' proposed rule to govern the Financial Assistance and Social Services Program is hereby extended to provide additional opportunity for public comment. In response to tribal requests for additional time, the comment period is extended for 60 days. The proposed rule was published in the **Federal Register** on May 6, 1999 (64 FR 24296).

DATES: The comment period is extended from July 6, 1999 to September 7, 1999.

ADDRESSES: Send comments to Bureau of Indian Affairs, Division of Social Services, 1849 C Street, NW, MS–4660–MIB, Washington, DC 20240, or telephone number (202) 208–2479.

FOR FURTHER INFORMATION CONTACT: Larry Blair, Chief, Division of Social Services, Bureau of Indian Affairs, 202–208–2479.

Dated: June 19, 1999.

Kevin Gover,

Assistant Secretary—Indian Affairs.

[FR Doc. 99–16251 Filed 6–24–99; 8:45 am]

BILLING CODE 4310–02–M

ENVIRONMENTAL PROTECTION AGENCY

40 CFR Part 52

[CA–221–158; FRL–6366–6]

Approval and Promulgation of Implementation Plans; California—Owens Valley Nonattainment Area; PM–10

AGENCY: Environmental Protection Agency (EPA).

ACTION: Proposed rule.

SUMMARY: EPA is proposing to approve the State Implementation Plan (SIP) submitted by the State of California for attaining the particulate matter (PM–10) national ambient air quality standards (NAAQS) in the Owens Valley Planning Area, along with the State's request for an extension to December 31, 2006 to attain the PM–10 NAAQS in the area.

EPA is proposing to approve the SIP revision and extension request under provisions of the Clean Air Act (CAA) regarding EPA action on SIP submittals, SIPs for national primary and secondary standards, and plan requirements for nonattainment areas.

DATES: Written comments on this proposal must be received by July 9, 1999.

ADDRESSES: Comments should be addressed to the EPA contact below. Copies of the State's submittal and other information are contained in the docket for this rulemaking. The docket is available for inspection during normal business hours at the following location:

U. S. Environmental Protection Agency, Region 9, Air Division, 75 Hawthorne Street, San Francisco, CA 94105–3901.

Copies of the SIP materials are also available for inspection at the addresses listed below:

California Air Resources Board, 2020 L Street, P.O. Box 2815, Sacramento, CA 95814.

Great Basin Unified Air Pollution Control District, 157 Short Street, Suite 6, Bishop, CA 93514.

FOR FURTHER INFORMATION CONTACT: Larry Biland, U. S. Environmental Protection Agency, Region 9, Air Division (AIR–2), 75 Hawthorne Street, San Francisco, CA 94105–3901, (415) 744–1227.

SUPPLEMENTARY INFORMATION:

I. Background

A. Executive Summary

1. The Particulate Matter Problem in Owens Valley

Owens Lake is located in Inyo County in eastern-central California. The lake is part of a chain of lakes formed during the late Pleistocene Epoch. In 1913, the Los Angeles Department of Water and Power (LADWP) completed an aqueduct system and began diverting the waters of the Owens River to the City of Los Angeles. By 1930, these diversions had drained Owens Lake almost completely dry.

Strong winds over the dry, alkaline bed of Owens Lake have produced among the highest measured concentrations of PM–10 ever recorded, more than 25 times the federal 24–hour standard.[1] Analysis of meteorological data and PM–10 samples in the Owens Valley Planning Area during days when violations are recorded shows that 94 percent of PM–10 concentrations come from the Owens Lake bed and another 5 percent come from reentrained Owens Lake dust already deposited in the area. Annual PM–10 emissions from Owens Lake may exceed 400,000 tons, and dust transport from the Lake can result in violations of the 24–hour PM–10 NAAQS more than 40 miles to the South.[2]

Approximately 40,000 permanent residents live in the area affected by Owens Lake particulate emissions. Included in this number are members of 4 tribes: the Lone Pine Paiute/Shoshone Tribe, the Fort Independence Tribe, the Big Pine Tribe, and the Bishop Tribe. Residents and visitors to the area suffer the health effects from high PM–10 concentrations, including lung damage, increased respiratory disease, and premature death. Children, the elderly, and people suffering from heart and lung disease, such as asthma, are especially at risk. Moreover, the dust from the lake bed contains carcinogenic compounds, including arsenic, nickel, and cadmium.[3]

Elevated levels of Owens Valley particulate matter harm visibility and vegetation as far as 150 miles away. Included in the impact area are 3 national parks (Death Valley, Kings Canyon, and Sequoia), 4 wilderness areas (Domeland, Golden Trout, John Muir, and South Sierra), 1 national historic site (Manzanar), and 2 national forests (Inyo and Sequoia). Finally, Owens Lake dust events adversely affect operations at China Lake Naval Air Weapons Station, since many of the Navy's operations require good visibility.[4]

2. The Owens Valley PM–10 Plan

On November 16, 1998, after over a decade of planning, research, analysis, and negotiation, the Governing Board of the Great Basin Unified Air Pollution Control District (''the District'') unanimously adopted the 1998 Revision to the Owens Valley PM–10 Planning Area Demonstration of Attainment State Implementation Plan (''the 1998 SIP'' or ''the plan''). While the District was principally responsible for the plan, there were many participants in the planning process, including the California Air Resources Board (CARB), LADWP, the City of Los Angeles, the tribal governments, Federal land managers, the Navy, the State Lands Commission, and members of the public.

In preparing the 1998 SIP, the District and the other plan participants confronted one of the most challenging air quality problems: how to reduce peak PM–10 concentrations from almost 4000 micrograms per cubic meter (ug/m3) to the 24-hour NAAQS of 150 ug/m3.[5] While the origin of the PM–10 problem was well understood—the draining of Owens Lake by the City of Los Angeles in the early part of this century, and continued LADWP withdrawals from Owens River—the solution to the problem, particularly over the relatively short time allowed under the CAA, proved controversial.

Among the unique complexities of the Owens Valley PM–10 planning process are the competing authorities and responsibilities of the District to protect Owens Valley residents from the harmful effects of air pollution and the City of Los Angeles to provide its residents with an adequate water supply.

In 1983, the California Legislature attempted to resolve these contentious issues by enacting Senate Bill 270 (California Health and Safety Code section 42316). This law has the following provisions:

(a) it exempts water-gathering operations from State air quality permit regulations;

---

[1] EPA revised the NAAQS for particulate matter on July 1, 1987 (52 FR 24672), replacing standards for total suspended particulates with new standards applying only to particulate matter up to 10 microns in diameter (PM–10). At that time, EPA established two PM–10 standards. The annual PM–10 standard is attained when the expected annual arithmetic mean of the 24–hour samples averaged over a 3-year period does not exceed 50 micrograms per cubic meter (ug/m3). The 24–hour PM–10 standard of 150 ug/m3 is attained if samples taken for 24–hour periods have no more than one expected exceedance per year, averaged over 3 years. See 40 CFR 50.6 and 40 CFR part 50, appendix K.

On July 18, 1997, EPA reaffirmed the annual PM–10 standard, and slightly revised the 24–hour PM–10 standard (62 FR 38651). In the same action, EPA also established two new standards for PM, both applying only to particulate matter up to 2.5 microns in diameter (PM–2.5).

This SIP submittal addresses the 24–hour and annual PM–10 standards as originally promulgated. A recent opinion issued by the U.S. Court of Appeals for the D.C. Circuit in American Trucking Assoc., Inc., et al. v. USEPA, No. 97–1440 (May 14, 1999), among other things, vacated the new standards for PM–10 that were published on July 18, 1997 and became effective September 16, 1997. However, the PM–10 standards promulgated on July 1, 1987 were not an issue in this litigation, and the Court's decision does not affect the applicability of those standards in this area. Codification of those standards continues to be recorded at 40 CFR 50.6. In the notice promulgating the new PM–10 standards, the EPA Administrator decided that the previous PM–10 standards that were promulgated on July 1, 1987, and provisions associated with them, would continue to apply in areas subject to the 1987 PM–10 standards until certain conditions specified in 40 CFR 50.6(d) are met. See 62 FR 38701. EPA has not taken any action under 40 CFR 50.6(d) for the Owens Valley Planning Area.

[2] Owens Valley PM–10 Planning Area Demonstration of Attainment State Implementation Plan (''1998 SIP''), pp. S–5 and S–3.

[3] 1998 SIP, pp. S–3 and 3–12.

[4] 1998 SIP, pp. 3–13 through 3–15.

[5] A 24-hour PM–10 concentration of 3,929 ug/m3 was recorded at Keeler on April 13, 1995 (1998 SIP, p. A1–27).

(b) it provides that the City of Los Angeles must fund control measure development and must implement reasonable measures ordered by the District to mitigate the impacts of its water diversion activities at Owens Lake, on the basis of substantial evidence establishing that the City's activities cause or contribute to violations of federal or State air quality standards;

(c) it prevents the District from mandating measures that affect the City's right to produce, divert, store, or convey water; and

(d) it provides opportunities for the City to appeal to CARB any measures or fees imposed by the District.

Before settling on the 3 primary control measures in the plan, the District examined many strategies but found them not to be feasible or effective in significantly reducing dust emissions from the lake bed. Rejected measures include use of sprinklers, chemical dust suppressants, surface compaction, sand fences, and brush fences.

In cooperation with LADWP, the District designed and issued a unique order to the City.[6] The order requires the City to implement 3 measures: shallow flooding, managed vegetation, and application of gravel cover. The order further provides that implementation will proceed in 2 increments, each divided into 3 phases, and covering the period 1999 through 2006.

Although small scale tests have been performed, the plan's technically difficult dust controls have never been applied over an area the size of the Owens Lake project—a 35-square mile control area within the 110-square mile lake bed.[7] For this reason, the order provides that the District will periodically assess the actual effectiveness of the controls, and will revise the SIP by December 31, 2003, to incorporate the knowledge gained by previous implementation of control measures, in order to ensure sufficient reductions to attain the NAAQS by 2006. EPA agrees with the District and the City that this empirical approach is appropriate in view of the area's challenging control strategies and unique emission reduction requirements.

As discussed below, EPA proposes to approve this SIP as a critically important blueprint for clean air in one of the country's most difficult PM–10 nonattainment areas. Primary credit for this remarkable achievement is shared by the District and LADWP, and successful plan implementation will require that both agencies continue to work effectively together. However, the other participating members of the public and the State's air pollution professionals should also be commended for assisting in the identification and refinement of the control approaches included in the plan, and their continued involvement will be vital as the plan is carried forward and evolves in the future.

B. CAA Requirements

The Federal CAA was substantially amended in 1990 to establish new planning requirements and attainment deadlines for the NAAQS. The most fundamental of these nonattainment area provisions applicable to Owens Valley is the requirement that the State submit a SIP demonstrating attainment of the PM–10 NAAQS. This demonstration must be based upon enforceable measures to achieve emission reductions leading to emissions at or below the level predicted to result in attainment of the NAAQS throughout the nonattainment area. The measures must meet the standard for Best Available Control Measures (BACM), and the measures must be implemented expeditiously and ensure attainment no later than the applicable CAA deadline.

EPA has issued a ''General Preamble'' describing the Agency's preliminary views on how EPA intends to act on SIPs submitted under Title I of the Act. See 57 FR 13498 (April 16, 1992), 57 FR 18070 (April 28, 1992). EPA later issued an Addendum to the General Preamble providing guidance on SIP requirements for serious PM–10 areas. 59 FR 41998 (August 16, 1994). The reader should refer to these documents for a more detailed discussion of EPA's preliminary interpretations of Title I requirements. In this proposed rulemaking action, EPA applies these policies to the Owens Valley PM–10 SIP submittal, taking into consideration the specific factual issues presented.

C. Designation and Classification

On the date of enactment of the 1990 CAA Amendments, PM–10 areas, including the Owens Valley Planning Area, meeting the qualifications of section 107(d)(4)(B) of the amended Act, were designated nonattainment by operation of law. See 56 FR 11101 (March 15, 1991). The boundaries of the Owens Valley nonattainment area (Hydrologic Unit #18090103) are codified at 40 CFR 81.305.

Once an area is designated nonattainment, section 188 of the CAA outlines the process for classification of the area and establishes the area's attainment date. In accordance with section 188(a), at the time of designation, all PM–10 nonattainment areas, including Owens Valley, were initially classified as moderate by operation of law. Section 188(b)(1) of the Act further provides that moderate areas can subsequently be reclassified as serious before the applicable moderate area attainment date if at any time EPA determines that the area cannot ''practicably'' attain the PM–10 NAAQS by this attainment date.

CARB submitted a moderate area PM–10 SIP for Owens Valley on January 9, 1992. Based on this submittal, EPA determined on January 8, 1993, that Owens Valley could not practicably attain by the applicable attainment deadline for moderate areas (December 31, 1994, per section 188(c)(1) of the Act), and reclassified Owens Valley as serious (58 FR 3334). In accordance with section 189(b)(2) of the Act, the applicable deadline for submittal of a SIP for Owens Valley addressing the requirements for serious PM–10 nonattainment areas in section 189(b) and (c) of the Act is February 8, 1997—4 years after the effective date of the reclassification (58 FR 3340–1).

D. Adoption and Submittal of the 1998 SIP

Because of controversy regarding appropriate control requirements, the plan was not adopted until November 16, 1998. Following adoption by the District, CARB also adopted the 1998 SIP and submitted it to EPA on December 10, 1998. On February 2, 1999, EPA deemed the submittal complete.[8]

Both the District and CARB satisfied applicable statutory and regulatory requirements for reasonable public notice and hearing prior to adoption of the plan. The District conducted numerous public workshops and properly noticed the public hearing at which the plan was adopted. The SIP submittal includes proof of publication for notices of the public hearing. Therefore, EPA proposes to approve the 1998 SIP as meeting the public notice and involvement requirements of section 110(a)(1) of the CAA.

[6] Great Basin Unified Air Pollution Control District Board Order #981116–01, November 16, 1998, adopted as part of Governing Board Resolution No. 98–05. The order and control measures are discussed in more detail below, in section I.F.

[7] The SIP control measures are discussed in detail in section I.F., below.

[8] EPA adopted the completeness criteria on February 16, 1990 (55 FR 5830) and, pursuant to section 110(k)(1)(A) of the CAA, revised the criteria on August 26, 1991 (56 FR 42216).

E. Emissions Inventories

The plan includes 1995 baseline emissions inventories for peak 24-hour and annual emissions in tons per day. The inventory covers the expected control area for the plan, the southern half of the nonattainment area, which includes all sources that have been found to contribute to PM–10 violations. Because future emissions are not expected to change significantly in this rural and relatively undeveloped area, the attainment year inventories are assumed to be identical to the 1995 inventories.

The peak 24-hour PM–10 inventory includes 8,346 tons per day (tpd) from wind erosion on the exposed Owens dry lake bed; 516 tpd from off-lake sources of lake bed dust; and 42 tpd from prescribed burning. The Owens Valley inventory has insignificant emissions from major source categories in typical PM–10 nonattainment areas, including reentrained dust from motor vehicles (0.15 tpd unpaved roads, 0.19 paved roads), residential wood burning (0.24 tpd), and industrial facilities (0.23 tpd, plus a proposed soda ash project projected to emit 0.51 tpd). Secondary aerosols are also insignificant PM–10 sources in Owens Valley, and so the inventories are for primary particulate only.

Where appropriate, the District used EPA emission factors (Compilation of Air Pollution Emissions Factors, AP–42, USEPA, 1985). The District relied on permitted emissions for the area's 4 industrial facilities. Finally, the District developed specific emission algorithms for wind erosion based on wind tunnel studies (1998 SIP, section 4–3). The plan provides adequate documentation of the wind erosion emission factor development and validation.

EPA concludes that the emissions inventories are comprehensive, accurate, and current, and that they are consistent with EPA's guidance.[9] EPA proposes to approve the emissions inventories as meeting the requirements of section 172(c)(3) of the CAA.

F. Control Measures

1. Description of Control Measures

The plan includes 3 control measures, each of which is designed to reduce emissions from the Owens Lake bed. They are shallow flooding, managed vegetation, and gravel cover. The following is a brief summary of each of the measures, which are described at more length in Chapter 5 of the 1998 SIP.

a. Shallow Flooding

This control measure consists of releasing water along the upper edge of the Owens Lake bed and allowing it to spread and flow down-gradient toward the center of the lake. To attain the required PM–10 control efficiency, the District concludes that at least 75 percent of each square mile of the control area must be wetted to produce standing water or surface saturated soil, between September 15 and June 15 of each year. The District estimates that a maximum of 4 acre-feet of water is required annually to control PM–10 emissions from an acre of lake bed.

To maximize project water use efficiency, flows to the control area will be precisely regulated so that only the exact amount of water is released to keep the soil wet. Although the quantity of excess water will be minimized through system operation, any water that does reach the lower end of the control area will be collected in berms keyed into lake bed sediments and pumped back to the outlets to be reused.

Shallow flooding will require the City to construct a large-scale water transmission, distribution, and outlet infrastructure; electrical power lines; access roads; and water control berms. The City will take appropriate steps to minimize adverse environmental impacts during this construction and after flooding. The project will include a program to remove any salt cedar (*Tamarix ramosissima*) and other undesirable non-native plant and grass species that invade wet playa areas. The City must also prevent disruption of shorebird breeding activities when water delivery is reduced on June 15 of each year. Finally, the City will design and implement mosquito abatement programs, including the erection of bat roosting structures, and will monitor the impact of any pesticide usage to ensure that mosquito control activities do not result in unacceptable rates of egg thinning and failure.

b. Managed Vegetation

This control measure consists of creating a farm-like environment containing a mosaic of small (approximately 4 to 20 acre) confined fields constructed of saltgrass (*Distichlis spicata*) that are irrigated with shallow pulses of water. The City will need to carefully monitor release of water to leach soils to within a level suitable for saltgrass. Saltgrass will be the only plant species to be introduced to the fields. It is tolerant of relatively high soil salinity, spreads rapidly via rhizomes, and provides good protective cover year-round even when dead or dormant. Saltgrass stands can subsist with minimal amounts of applied water during the summer. Dust control effectiveness should remain undiminished, provided that adequate irrigation has stimulated plant growth and has delivered stored water in the rooting zone during the spring months. Biological, mechanical, and chemical control methods will be used to remove pest plants and noxious grasses.

Program implementation will require construction of earthen infrastructure for water distribution, including ditches, berms, channels, and reservoirs that allow for level border irrigation strategies that leach and drain readily through the fractured structure of the soil. The drainage system will be designed and constructed to allow for mixing of fresh water and saline drain water to achieve an ideal irrigation salinity. This will serve to maintain a downward gradient of salts in the rooting column of the soil in order to prevent salt from the shallow water table from rising into the rooting zone by capillary action. The drainage system must also be managed to prevent the rise of the water table into the rooting zone. Finally, the project will involve construction of special areas for saturated evaporite deposits.

c. Gravel Cover

A 4-inch layer of coarse gravel laid on the surface of the Owens Lake playa will prevent PM–10 emissions by: (1) preventing the formation of efflorescent evaporite salt crusts, because the large spaces between the gravel particles interfere with the capillary forces that transport the saline water to the surface where it evaporates and deposits salts; and (2) raising the threshold wind velocity required to lift the large gravel particles so that transport of the particles is not possible by wind speeds typical of the Owens Lake area.

Gravel blankets can work effectively on essentially any type of soil surface. Under certain limited conditions of sandy soils combined with high groundwater levels, it may be possible for some of the gravel blanket to settle into lake bed soils and thereby lose effectiveness in controlling PM–10 emissions. To prevent the loss of any protective gravel material into lake bed soils, a permeable geotextile fabric may be placed between the soil and the gravel where necessary. This will prevent the loss of any gravel.

Gravel areas must be protected from water- and wind-borne soil and dust. The gravel blanket will be the last control measure to be implemented in order to eliminate wind-borne depositions. Gravel areas will be

[9] PM–10 Emission Inventory Requirements (EPA–450/2–93), USEPA 1993.

protected from flood deposits with flood control berms, drainage channels and desiltation and retention basins, which will ensure that the gravel blanket will remain an effective PM–10 control measure for many years.

To attain the required PM–10 control efficiency, 100 percent of all areas designated for gravel must be covered with a layer of gravel 4 inches thick. All gravel material shall be screened to a size greater than ⅜-inch in diameter.

d. Additional Measures

In addition to these three control measures, the City is authorized to implement one or more control measures of its choosing on 3.5 square miles of the lake bed in the ''Dirty Socks'' area, at the southern boundary of the lake and near State Highway 190. The controls placed in this area may be one of the 3 identified measures, modified versions of these measures, or other unidentified measures. The control measures placed in this area do not need to be approved by the District. However, if the City elects to apply controls in the Dirty Socks area, the City is responsible for assuring that the Dirty Socks control measures are integrated into an entire control strategy that meets the PM–10 NAAQS by December 31, 2006.

2. Implementation Schedule

The proposed control strategy will be implemented in 2 increments. The first increment will take place between November 16, 1998, and December 31, 2003. This requires the implementation of control measures on 16.5 square miles of the Owens Lake bed, unless the District finds that attainment is achieved by placing controls on a smaller area. During this time the emphasis will be on controlling those portions of the lake bed that are most emissive in terms of the frequency and severity of emissions. The focus will be on improving control measure efficiencies and on identifying those remaining areas of the lake bed that will continue to contribute to PM–10 NAAQS violations, if any.

The second increment will take place between January 1, 2004 and December 31, 2006. This will require implementation of any additional control measures necessary to provide for attainment of the PM–10 NAAQS by December 31, 2006.

The District commits to revise the SIP in 2003 to incorporate new knowledge and provide for attainment of the PM–10 NAAQS by December 31, 2006. If the District determines that additional or fewer controls are required to meet the NAAQS by December 31, 2006, the 2003 SIP will provide for implementation of the appropriate control measures for the final step of the control strategy.

3. BACM Requirement

The Owens Valley serious area SIP must include control measures consistent with the requirements for Reasonably Available Control Measures (RACM), Reasonably Available Control Technology (RACT), BACM, and Best Available Control Technology (BACT). RACM and RACT are control technology requirements applicable to moderate areas. The requirements for RACT and BACT, which apply to stationary and area sources, are generally not applicable within the Owens Valley area, in which all PM–10 sources except for wind erosion are *de minimis.* The 1998 SIP's BACM provision for wind erosion sources is more stringent than the RACM mandate.

EPA defines BACM as ''the maximum degree of emissions reduction of PM–10 and PM–10 precursors from a source * * * which is determined on a case-by-case basis, taking into account energy, environmental, and economic impacts and other costs, to be achievable for such source through application of production processes and available methods, systems, and techniques for control of each such pollutant.'' General Preamble Addendum, 59 FR 42010 (August 16, 1994). EPA exempts from the BACM requirement *de minimis* source categories, which do not contribute significantly to nonattainment. 59 FR 42011. CAA section 189(b)(1)(B) requires that the plan contain provisions to assure that BACM for the control of PM–10 shall be implemented 4 years after the effective date of the reclassification, or by February 8, 1997.[10]

In the plan and in the appendices to the plan, the District has provided extensive documentation on both the control measures included in the plan and those rejected. The documentation quantifies the costs of construction, materials, operation, and maintenance, and examines other factors, including energy and environmental impacts. EPA agrees that adequate time must be allowed to carry out the control measures successfully, since the measures are uniquely vast in scale, materiel, and required construction activity. The District's order to the City establishes an aggressive, but phased, implementation schedule, which is shown to be as expeditious as practicable.

4. EPA Proposed Action on Control Measures

EPA concludes that the plan demonstrates that:

(a) Only wind erosion emissions from the lake bed cause or contribute to PM–10 violations in the area and, hence, applying BACM to other source categories would not contribute significantly to achieving the NAAQS as expeditiously as practicable;

(b) The plan's 3 control measures for wind erosion are consistent with the BACM requirement in terms of the timing, degree, and extent of the control program; and

(c) There is insufficient evidence, at this time, to support the economic and technological feasibility of any alternative or additional measures for the control of wind erosion emissions in Owens Valley, even assuming the high degree of control stringency associated with the BACM requirement.

EPA therefore proposes to approve the control measures contained in the SIP under CAA section 110(k)(3), as meeting the requirements of CAA sections 110(a) and 189(b)(1)(B).

G. Reasonable Further Progress (RFP)

The plan must also include measurable milestones which are to be achieved every 3 years and show RFP toward attainment by the applicable attainment deadline. The District order to the City includes enforceable schedules for annual implementation of the specified control measures, beginning with the completion, by December 31, 2001, of the phase 1 control of 10 square miles. The order requires control of an additional 3.5 square miles by 2002; 3 square miles by 2003; and 2 square miles in each of the remaining 3 years through 2006.

EPA proposes to approve this aggressive and enforceable annual schedule as meeting the RFP requirements of CAA section 189(c).

H. Contingency Measures

The CAA requires that the SIP include contingency measures to be implemented if the area fails to meet progress requirements or to attain the NAAQS by the applicable deadline. As discussed above, the District commits to revise the SIP in 2003 to implement additional controls if necessary to attain the NAAQS by 2006. If in 2006 the District determines that the area will not attain by the end of that year, the District order requires the City to

[10] Because the statutory BACM implementation deadline has passed, the plan must assure that BACM will be implemented ''as soon as possible.'' *Delaney* v. *EPA,* 898 F.2d 687, 691 (9th Cir. 1990). EPA has interpreted this requirement to be ''as soon as practicable.'' 55 FR 36458, 36505 (September 9, 1990).

implement controls on an additional 2 square miles of the Owens Lake bed each year. Implementation of this contingency measure is automatic, and requires no further action by the District or any other agency.

EPA concludes that the plan satisfies the contingency requirements, and proposes to approve the SIP's contingency provisions under section 172(c)(9).

I. Extension of the Attainment Deadline

CAA section 188(e) allows states to apply for up to a 5-year extension of the serious area attainment deadline of December 31, 2001. In order to obtain the extension, there must be a showing that: (1) Attainment by 2001 would be impracticable, (2) the state complied with all requirements and commitments pertaining to the area in the implementation plan for the area, and (3) the state demonstrates that the plan for the area includes the most stringent measures that are included in the SIP of any state or are achieved in practice in any state, and can feasibly be implemented in the area.

The 1998 SIP has demonstrated that the plan includes all feasible and effective control measures for wind erosion, and that the implementation schedule for the control measures is as expeditious as practicable, considering the massive projects that must be undertaken. EPA agrees that no other SIP contains measures and no other area implements measures for control of wind erosion that would be feasible and effective in the Owens Valley area. Finally, EPA believes that attainment could not feasibly be achieved before 2006. Therefore, EPA proposes to grant, under CAA section 188(e), a 5-year attainment date extension to December 31, 2006.

J. Attainment Demonstration

The SIP must provide a detailed demonstration (including air quality modeling) that the specified control strategy will reduce PM–10 emissions so that the standards will be attained as soon as practicable but no later than December 31, 2006, assuming final EPA approval of the attainment deadline extension. CAA section 189(b)(1)(A). EPA considers the area to be in attainment of the NAAQS if 24-hour concentrations are 150 ug/m3 or less and the annual arithmetic mean is 50 ug/m3 or less. See footnote 1. The attainment demonstration in the Owens Valley area focuses on the 24-hour NAAQS, since the area does not violate the annual NAAQS. The 3-year annual arithmetic mean for the most recent period (1996–1998) is 37.0 ug/m3.[11]

Air quality modeling techniques were applied to assess control scenarios developed by the District to reduce PM–10 concentrations and bring the airshed into attainment. The specific computer model used by the District is called the Industrial Source Complex Short-Term Version 3 model or ISCST3. ISCST3 is the EPA recommended dispersion model for regulatory assessment of fugitive dust sources (40 CFR part 51, appendix W). The modeling analysis itself comports with existing modeling guidelines.[12]

A performance evaluation was also conducted to determine the uncertainty and reliability of these modeling methods based on a comparison of model predictions with ambient PM–10 measurements. Chapter 6 of the 1998 SIP contains a detailed description of the air quality modeling used for the Owens Valley.

The objectives of the air quality modeling are:

(1) To conduct the dispersion modeling in accordance with the regulatory guidance for PM–10 SIPs using EPA recommended modeling tools and procedures.

(2) To perform an evaluation of the proposed dispersion modeling techniques using 2 years of ambient data and focus the evaluation on the higher observed 24-hour PM–10 concentrations. The performance evaluation was used to assess model uncertainty and aid in the selection of several aspects of the modeling procedures.

(3) To assess and refine control strategies until the modeling approach demonstrates attainment of the PM–10 NAAQS.

The air quality model shows that the proposed set of control strategies would reduce ambient PM–10 impacts at shoreline almost 97 percent. After implementation of the control strategies, the number of PM–10 exceedances at the shoreline will be less than one per year, which complies with the PM–10 standard.

To achieve the emission reductions necessary to meet the PM–10 standard, the controlled emission rate must be 1.25 metric tons of PM–10 per square kilometer per day (approximately 1.4 tons per 250 acres per day). This is based on the emissions for the design day meteorology on March 12, 1994. The 3 control measures (shallow flooding, managed vegetation and gravel) each would result in emissions below this controlled emission rate.

EPA concludes that the air quality modeling and attainment demonstration contained in the 1998 SIP are consistent with existing EPA guidelines. EPA proposes to approve the attainment demonstration under CAA section 189(b)(1)(A).

II. Summary of EPA's Proposed Action

EPA is proposing to approve the serious area PM–10 SIP submitted by the State of California for the Owens Valley PM–10 nonattainment area. Specifically, EPA is proposing to approve the 1998 SIP with respect to the CAA requirements for public notice and involvement under section 110(a)(1); emissions inventories under section 172(c)(3); control measures under section 110(k)(3), as meeting the requirements of sections 110(a) and 189(b)(1)(B); RFP and rate-of-progress milestones under section 189(c); contingency measure(s) under section 172(c)(9); and demonstration of attainment under section 189(b)(1)(A). EPA is also proposing to approve the State's request for an extension of the attainment date from December 31, 2001 to December 31, 2006, under CAA section 188(e).

III. Administrative Requirements

A. Executive Order 12866

The Office of Management and Budget (OMB) has exempted this regulatory action from Executive Order (E.O.) 12866, Regulatory Planning and Review.

B. Executive Order 12875

Under Executive Order 12875, Enhancing the Intergovernmental Partnership, EPA may not issue a regulation that is not required by statute and that creates a mandate upon a State, local or tribal government, unless the Federal government provides the funds necessary to pay the direct compliance costs incurred by those governments, or EPA consults with those governments. If EPA complies by consulting, Executive Order 12875 requires EPA to provide to the Office of Management and Budget a description of the extent of EPA's prior consultation with representatives of affected State, local and tribal governments, the nature of their concerns, copies of any written

[11] Preliminary information from EPA's Aerometric Information Retrieval System (AIRS). The 1998 SIP's wind erosion control measures should be effective in reducing not only 24-hour PM–10 concentrations but also annual concentrations, since primary and secondary wind erosion is 99 percent of the anthropogenic PM–10 emissions on an annual basis, and 99.5 percent on a 24-hour basis.

[12] PM–10 SIP Development Guideline (USEPA 450/2–86–001, 6/87); Guideline on Air Quality Models (Revised); Memorandum from Joseph Tikvart and Robert Bauman dated July 5, 1990.

communications from the governments, and a statement supporting the need to issue the regulation. In addition, Executive Order 12875 requires EPA to develop an effective process permitting elected officials and other representatives of State, local and tribal governments ''to provide meaningful and timely input in the development of regulatory proposals containing significant unfunded mandates.'' Today's rule does not create a mandate on State, local or tribal governments. The rule does not impose any enforceable duties on these entities. Accordingly, the requirements of section 1(a) of E.O. 12875 do not apply to this rule.

C. Executive Order 13045

Protection of Children from Environmental Health Risks and Safety Risks (62 FR 19885, April 23, 1997), applies to any rule that: (1) Is determined to be ''economically significant'' as defined under E.O. 12866, and (2) concerns an environmental health or safety risk that EPA has reason to believe may have a disproportionate effect on children. If the regulatory action meets both criteria, the Agency must evaluate the environmental health or safety effects of the planned rule on children, and explain why the planned regulation is preferable to other potentially effective and reasonably feasible alternatives considered by the Agency. This rule is not subject to E.O. 13045 because it does not involve decisions intended to mitigate environmental health or safety risks.

D. Executive Order 13084

Under Executive Order 13084, Consultation and Coordination with Indian Tribal Governments, EPA may not issue a regulation that is not required by statute, that significantly or uniquely affects the communities of Indian tribal governments, and that imposes substantial direct compliance costs on those communities, unless the Federal government provides the funds necessary to pay the direct compliance costs incurred by the tribal governments, or EPA consults with those governments. If EPA complies by consulting, Executive Order 13084 requires EPA to provide to the Office of Management and Budget, in a separately identified section of the preamble to the rule, a description of the extent of EPA's prior consultation with representatives of affected tribal governments, a summary of the nature of their concerns, and a statement supporting the need to issue the regulation. In addition, Executive Order 13084 requires EPA to develop an effective process permitting elected officials and other representatives of Indian tribal governments ''to provide meaningful and timely input in the development of regulatory policies on matters that significantly or uniquely affect their communities.'' Today's rule does not significantly or uniquely affect the communities of Indian tribal governments. Accordingly, the requirements of section 3(b) of E.O. 13084 do not apply to this rule.

E. Regulatory Flexibility Act

The Regulatory Flexibility Act (RFA) generally requires an agency to conduct a regulatory flexibility analysis of any rule subject to notice and comment rulemaking requirements unless the agency certifies that the rule will not have a significant economic impact on a substantial number of small entities. Small entities include small businesses, small not-for-profit enterprises, and small governmental jurisdictions. This final rule will not have a significant impact on a substantial number of small entities because SIP approvals under section 110 and subchapter I, part D of the Clean Air Act do not create any new requirements but simply approve requirements that the State is already imposing. Therefore, because the Federal SIP approval does not create any new requirements, I certify that this action will not have a significant economic impact on a substantial number of small entities. Moreover, due to the nature of the Federal-State relationship under the Clean Air Act, preparation of flexibility analysis would constitute Federal inquiry into the economic reasonableness of state action. The Clean Air Act forbids EPA to base its actions concerning SIPs on such grounds. *Union Electric Co.,* v. *U.S. EPA*, 427 U.S. 246, 255–66 (1976); 42 U.S.C. 7410(a)(2).

F. Unfunded Mandates

Under section 202 of the Unfunded Mandates Reform Act of 1995 (''Unfunded Mandates Act''), signed into law on March 22, 1995, EPA must prepare a budgetary impact statement to accompany any proposed or final rule that includes a Federal mandate that may result in estimated annual costs to State, local, or tribal governments in the aggregate; or to private sector, of $100 million or more. Under section 205, EPA must select the most cost-effective and least burdensome alternative that achieves the objectives of the rule and is consistent with statutory requirements. Section 203 requires EPA to establish a plan for informing and advising any small governments that may be significantly or uniquely impacted by the rule.

EPA has determined that the approval action promulgated does not include a Federal mandate that may result in estimated annual costs of $100 million or more to either State, local, or tribal governments in the aggregate, or to the private sector. This Federal action approves pre-existing requirements under State or local law, and imposes no new requirements. Accordingly, no additional costs to State, local, or tribal governments, or to the private sector, result from this action.

List of Subjects in 40 CFR Part 52

Environmental protection, Air pollution control, Intergovernmental relations, Oxides of nitrogen, Ozone, Particulate matter, Reporting and recordkeeping requirements, Volatile organic compounds.

Dated: June 18, 1999.

Felicia Marcus,

Regional Administrator, Region IX.

[FR Doc. 99–16227 Filed 6–24–99; 8:45 am]

BILLING CODE 6560–50–P

ENVIRONMENTAL PROTECTION AGENCY

40 CFR Part 68

[FRL–6367–2]

List of Regulated Substances and Thresholds for Accidental Release Prevention; Flammable Hydrocarbon Fuel Exemption

AGENCY: Environmental Protection Agency (EPA).

ACTION: Proposed rule; extension of comment period.

SUMMARY: On May 28, 1999, the Environmental Protection Agency proposed to modify the rule listing regulated substances and threshold quantities for the Risk Management Program (RMP) issued under section 112(r) of the Clean Air Act as amended. EPA proposed that regulated flammable hydrocarbon substances need not be considered in determining whether more than a threshold quantity is present when the substance is intended for use as a fuel and does not exceed 67,000 pounds in a process that is not manufacturing the fuel, does not contain greater than a threshold quantity of another regulated substance, and is not collocated or interconnected to another covered process. This notice extends the public comment period for the proposed rule.

DATES: The comment period for the proposed rule is extended from the

original closing date of June 28, 1999 to July 28, 1999.

ADDRESSES: Comments on the proposed rule should be mailed or submitted to: Environmental Protection Agency, Air Docket (6102), Attn: Docket No. A–99–18, Waterside Mall, 401 M St. SW, Washington, DC 20460. Comments must be submitted in duplicate. Comments may be submitted on disk in WordPerfect or Word formats.

FOR FURTHER INFORMATION CONTACT: James Belke, Chemical Engineer, Chemical Emergency Preparedness and Prevention Office, Environmental Protection Agency, 401 M St. SW (5104), Washington, DC 20460, (202) 260–7314.

Dated: June 18, 1999.

Jim Makris,

Director, Chemical Emergency Preparedness and Prevention Office.

[FR Doc. 99–16236 Filed 6–24–99; 8:45 am]

BILLING CODE 6560–50–P

ENVIRONMENTAL PROTECTION AGENCY

40 CFR Part 272

[FRL–6364–1]

Idaho: Incorporation by Reference of Approved State Hazardous Waste Management Program

AGENCY: Environmental Protection Agency (EPA).

ACTION: Proposed rule.

SUMMARY: The EPA proposes to codify in part 272 of Title 40 of the Code of Federal Regulations (CFR) Idaho's authorized hazardous waste program. EPA will incorporate by reference into the CFR those provisions of the State statutes and regulations that are authorized and federally enforceable. In the ''Rules and Regulations'' section of this **Federal Register**, the EPA is codifying and incorporating by reference the State's hazardous waste program as an immediate final rule without prior proposal because EPA views this action as noncontroversial and anticipates no adverse comments. The Agency has explained the reasons for this codification and incorporation by reference in the preamble to the immediate final rule. If EPA does not receive adverse written comments, the immediate final rule will become effective and the Agency will not take further action on this proposal. If EPA receives adverse written comments, EPA will withdraw the immediate final rule and it will not take effect. EPA will then address public comments in a later final rule based on this proposal. EPA may not provide further opportunity for comment. Any parties interested in commenting on this action must do so at this time.

DATES: Written comments must be received on or before July 26, 1999.

ADDRESSES: Mail written comments to Jeff Hunt, U.S. EPA, Region 10, 1200 Sixth Avenue, Mail stop WCM–122, Seattle, WA 98101.

FOR FURTHER INFORMATION CONTACT: Jeff Hunt, U.S. EPA, Region 10, 1200 Sixth Avenue, Mail stop WCM–122, Seattle, WA 98101, phone number (206) 553–0256.

SUPPLEMENTARY INFORMATION: For additional information, please see the immediate final rule published in the ''Rules and Regulations'' section of this **Federal Register**.

Dated: June 9, 1999.

Chuck Findley,

Acting Regional Administrator, U.S. Environmental Protection Agency, Region 10.

[FR Doc. 99–16089 Filed 6–24–99; 8:45 am]

BILLING CODE 6560–50–P

ENVIRONMENTAL PROTECTION AGENCY

40 CFR Part 300

[FRL–6365–6]

National Oil and Hazardous Substances Pollution Contingency Plan; National Priorities List Update

ACTION: Notice of intent to delete the Munisport Landfill Superfund Site from the National Priorities List (NPL); request for comments.

SUMMARY: EPA, Region IV, announces its intent to delete the Munisport Landfill Superfund (Site) in North Miami, Dade County, Florida, from the NPL and requests public comment on this action. The NPL constitutes Appendix B, 40 CFR Part 300; the National Oil and Hazardous Substances Pollution Contingency Plan (NCP) promulgated by the United States Environmental Protection Agency (EPA) pursuant to Section 105 of the Comprehensive Environmental Response, Compensation and Liability Act of 1980 (CERCLA), as amended. EPA and the Florida Department of Environmental Protection (FDEP) have determined that all appropriate response actions under CERCLA have been implemented by the Potentially Responsible Party, the City of North Miami, and that no further response actions under CERCLA are needed. Moreover, EPA and the FDEP have determined that the remedial actions conducted at the Site to date are protective of human health and the environment, such that further federal response under CERCLA is not warranted.

DATES: Comments on the proposed deletion from the NPL should be submitted on or before July 26, 1999.

ADDRESSES: Comments may be mailed to: Kevin S. Misenheimer, Remedial Project Manager, South Site Management Branch, Waste Management Division, U.S. Environmental Protection Agency, Region IV, 61 Forsyth St., SW, Atlanta, Georgia 30303.

Comprehensive information on this Site is available through the EPA, Region IV, public docket located at the regional office. The deletion docket is available for viewing, by appointment, from 9:00 a.m. to 4:00 p.m., Monday through Friday, excluding holidays. Requests for appointments or copies of the background information from the EPA regional office should be directed to Debbie Jourdan, EPA, Region IV, docket office at 61 Forsyth St, SW, Atlanta, Georgia 30303. Ms. Jourdan may also be contacted by telephone at (404) 562–8862.

The Deletion Docket and background information from the regional public docket is also available for viewing at the Site information repository located at Florida International University, North Campus Library, 3000 NE 145th St, North Miami, FL 33181–3601. Appointments can be scheduled to review the documents locally by contacting the library at (305) 919–5726.

FOR FURTHER INFORMATION CONTACT: Kevin S. Misenheimer, Remedial Project Manager, EPA, Region IV, 61 Forsyth St. SW, Atlanta, Georgia 30303, (404) 562–8922.

SUPPLEMENTARY INFORMATION:

Table of Contents

I. Introduction
II. NPL Deletion Criteria
III. Deletion Procedures
IV. Basis for Intended Site Deletion

I. Introduction

EPA, Region IV, announces its intent to delete the Munisport Landfill Superfund Site from the NPL (Appendix B of the NCP), and requests public comment on this proposed action. EPA identifies sites that pose a significant threat to public health, welfare, or the environment and maintains an inventory of these sites through the NPL. Sites on the NPL may be the subject of remedial actions financed by the Hazardous Substances Superfund Response Trust Fund (Fund). Pursuant to 40 CFR 300.66(c) (8), any site deleted

from the NPL remains eligible for Fund-financed remedial actions if new or changing conditions warrant such actions.

In view of EPA's findings from the Remedial Investigation (RI) and Baseline Risk Assessment, and based on the results from the 1996 reassessment of the Preserve, there is nothing that would prevent unlimited use and unrestricted exposure at the site pursuant to CERCLA. Therefore, no five-year review of the site is needed. EPA believes data used to make this determination is consistent with, and in some cases exceeds, the database used to develop the original Record of Decision (ROD). EPA will accept comments concerning the proposed deletion of this site from the NPL until July 26, 1999.

Section II of this document explains the criteria for deleting sites from the NPL. Section III discusses the procedures EPA is using for this action. Section IV discusses the Munisport Landfill Site and explains how the site meets the deletion criteria.

II. NPL Deletion Criteria

The NCP establishes the criteria that the Agency uses to delete sites from the NPL. In accordance with 40 CFR 300.425(e), releases may be deleted from the NPL where no further response is appropriate. In making this determination, EPA shall consider, in consultation with the State, whether any of the following criteria are met:

- Responsible or other parties have implemented all appropriate actions required; or
- All appropriate Fund-financed responses under CERCLA have been implemented, and no further cleanup by responsible parties is appropriate, or
- The remedial investigation has shown that the release poses no significant threat to public health, welfare, or the environment, and therefore, the taking of additional remedial measures is not appropriate.

III. Deletion Procedures

EPA, Region IV, will accept and evaluate public comments before making a final decision to delete this Site from the NPL. Comments from the local community may be the most pertinent to the deletion decision. The following procedures were used for the intended deletion of this Site:

- All appropriate response under CERCLA has been implemented and no further action by EPA is appropriate.
- EPA, Region IV, has recommended deletion and has prepared the relevant documents.
- The State has concurred with the proposed deletion decision.
- Concurrent with this National Notice of Intent to Delete, a notice has been published in local newspapers and has been distributed to appropriate federal, state, and local officials and other interested parties announcing the commencement of a 30-day public comment period on EPA's Notice of Intent to Delete.
- The Region has made all relevant documents available in the Regional Office and local site information repository.

Deletion of a site from the NPL does not itself, create, alter, or revoke an individual's rights or obligations. The NPL is designed primarily for information purposes and to assist Agency management. As mentioned in Section II of this document, 40 CFR 300.425(e)(3) provides that deletion of a site from the NPL does not preclude eligibility for future Fund-financed response actions nor does it preclude future State action pursuant to State law.

The comments received on EPA's Notice of Intent to Delete during the notice and comment period will be evaluated by EPA before making the final decision to delete. The Region will prepare a Responsiveness Summary, if necessary, to address any comments received during the public comment period.

A deletion occurs when the EPA Regional Administrator publishes a final document in the **Federal Register**. Generally, the NPL will reflect deletions in the final update following this Notice of Intent. Public notices and copies of the Responsiveness Summary will be made available to local residents by Region IV.

IV. Basis for Intended Site Deletion

The following site summary provides the Agency's rationale for the proposal to delete this site from the NPL.

The Munisport Landfill is the location of a former municipal landfill that operated from 1974 to 1981. The landfill resulted from the filling of low-lying wetland areas with construction debris and solid waste in an effort to raise the elevation of the land for the construction of a cultural and trade center known as Interama. Failure of the Interama project led to subsequent municipal development efforts by Munisport, Inc. The United States Environmental Protection Agency (EPA) first became involved with this project in the late 1970's when it opposed the Army Corps of Engineers' plans for a modification of the developer's dredge and fill permit to allow for the use of solid waste as fill material, in addition to the already permitted construction debris. Due to the potential for the release of hazardous substances, pollutants, or contaminants to the environment, EPA placed the Site on the National Priorities List (NPL) in 1983 for cleanup under the Comprehensive Environmental Response, Compensation, and Liability Act of 1980 (CERCLA).

EPA's thorough investigation of the site during the late 1980's led EPA to the conclusion that, although the Site did not pose a threat to human health, the migration of landfill-leachate to the underlying groundwater and adjacent wetland posed a significant threat to the environment. This was due to the fact that the leachate-contaminated groundwater contained elevated levels of un-ionized ammonia which is highly toxic to aquatic organisms. Although other chemicals were detected in the leachate, concentrations of these chemicals were below levels that would present a threat to the environment. In an effort to abate the threat posed by the ammonia-contaminated leachate, EPA issued a Record of Decision (ROD) for the Munisport Landfill Superfund Site in July 1990. The ROD provided for the interception of leachate-contaminated groundwater through a hydraulic barrier prior to its discharge to the adjacent wetlands. The remedy also provided for the tidal restoration of a portion of wetlands that are a part of the Biscayne Bay Aquatic Preserve (i.e., State Mangrove Preserve) and a portion of wetlands that were hydrologically altered by the former construction of a dike during the landfill operations (i.e., altered wetlands). The City of North Miami subsequently entered into a Consent Decree with the United States of America in 1991 to perform the cleanup prescribed in the ROD. The Superfund Site was defined in the ROD as the release of hazardous substances from the landfill into the Mangrove Preserve and that portion of the landfill needed to implement the CERCLA remedy.

Through the mid-1990s, the City completed the tidal restoration of the State Mangrove Preserve, construction of a service road, and installation of the wells for the hydraulic barrier. Removal of two 40-foot wide sections of the causeway and 60-inch culverts originally installed in the late-1960's was completed in 1995, thus restoring the tidal flow from Biscayne Bay with the State Mangrove Preserve. Monitoring of the surface water quality in Biscayne Bay and the Preserve was conducted both before and after the removal of the two sections of the causeway. Results of the water sampling conducted as part of the surface water

monitoring indicated that the tidal restoration of the Mangrove Preserve had a greater affect on the mitigation of the toxicity of the landfill leachate to aquatic organisms in the preserve than originally anticipated.

Reassessment of water quality and toxicity in the Mangrove Preserve showed that there has been a significant reduction in the ammonia contamination and toxicity formerly documented by EPA in the *Water Quality and Toxic Assessment Study, Mangrove Preserve, 1989,* report. The scope of the reassessment incorporated critical elements of the 1989 study and was refined based on information collected during the remedial design studies and treatability studies. Most importantly, EPA concluded that these studies established the cause of the toxicity documented in the 1989 study. Concerns had been expressed by EPA, other agencies, and members of the community that not all of the toxicity documented in 1989 may have been the result of elevated levels of ammonia and that some of the toxicity may be associated with elevated levels of metals, organic compounds, or other toxicants. However, EPA has concluded that data collected during the design and treatability study show that the toxicity documented in the 1989 studies was the result of elevated levels of ammonia, potentially compounded by low levels of dissolved oxygen in the water.

The 1996 reassessment included screening of 12 sampling locations, which were monitored in the 1989 study, for the presence of ammonia and other water quality parameters. Four samples were collected from the Preserve that represented a range of high to low ammonia concentrations. Samples were also collected from the confluence of the east and west causeway breaches in Biscayne Bay and three reference points in Biscayne Bay. Samples were collected from these stations during high and low tides. The samples were analyzed for ammonia, organic compounds, metals, pesticides, and polychlorinated biphenyls. Toxicity tests were also conducted using a coastal minnow, *Menidia beryllina,* and a single cell species of algae, *Minutocellus polymorphus.* Changes in the hydrology of the Mangrove Preserve were also evaluated. Results from the 1996 reassessment confirmed that implementation of the Mangrove Preserve tidal restoration component of the remedy substantially reduced the ammonia concentrations and toxicity formerly documented in the surface waters of the Preserve. Due to concerns that the ammonia levels and toxicity may have been masked by summer rainfall, EPA resampled the Preserve locations on March 6, 1997, during an extended dry period. The samples were analyzed for ammonia and were consistent with the data collected in August 1996.

EPA believes that results from the August 1996 and March 1997 studies confirm that indeed there has been a significant reduction in the ammonia levels and toxicity originally documented in the 1989 study, such that no further action under Superfund is warranted. A copy of the *Water Quality and Toxicity Reassessment Study, Mangrove Preserve, Munisport Landfill, April 1997,* report, which provides a detailed discussion of the results, is available for review in the Deletion Docket for this site.

As a result of this determination, a no further action amendment to the ROD under CERCLA was signed September 5, 1997. Therefore, cleanup of the site under CERCLA is now complete. Issuance of the ROD Amendment serves as certification of completion of all remedial activities at the Munisport Landfill Site, as well as, a final Site Close-Out Report. No institutional controls, long-term groundwater monitoring, or Five-Year Reviews, are required under CERCLA, because no hazardous substances remain at the Site as defined in the ROD that would result in unlimited use and restricted exposures.

Community Involvement

The Munisport Landfill Superfund project has involved extensive community participation dating back to the early 1980's. Over the years various community-based organizations such as homeowner associations and activist groups, as well as, local chapters of national environmental organizations have commented on various aspects of the project. Sections 5.0 and 3.0 of the ROD and ROD Amendment, respectively, describe the extensive community involvement that has occurred over the years.

After the issuance of the ROD, EPA continued to involve the community in the remedial process. The community's main group is the Munisport Dump Coalition (MDC), the recipient of a Technical Assistance Grant (TAG) from EPA. Through the MDC, the community has had an opportunity to comment on documents required by the National Contingency Plan (NCP), and other documents relating to the design and construction of components of the remedy set forth in the ROD. In an effort to encourage community participation throughout the process, EPA has issued several deviations from the original $50,000 grant, bringing the total funding for the TAG to $150,000.

In addition to the coordination with the MDC, EPA has also worked with representatives of local groups such as the Friends of the Oleta River, Keystone Point Homeowners Association, Highland Village Homeowners Association, Florida and Tropical Audubon Societies, and Concerned Citizens for the Public Use of Munisport. EPA has also held numerous public and technical meetings and issued numerous fact sheets to keep the community apprized of the progress and to solicit input during the design and construction process.

The community has also been involved in this project through the Consent Decree entered by the United States District Court in 1992. Although the only parties to the Consent Decree are the United States of America and the City of North Miami, the District Court has allowed interested non-parties in the community to file information and express concerns with regard to the implementation of the remedy set forth in the ROD.

Applicable Deletion Criteria

One of the three criteria for site deletion, 40 CFR 300.425(e)(l)(ii), specifies that EPA may delete a site from the NPL if ''all appropriate Fund-Financed Response under CERCLA has been implemented, and no further response action by responsible parties is appropriate''. EPA, with the concurrence of FDEP, believes that this criterion for deletion has been met and the site is protective of human health and the environment. Subsequently, EPA is proposing the deletion of this site from the NPL. Documents supporting this action are available for review in the docket.

State Concurrence

The Florida Department of Environmental Protection concurs with the proposed deletion of the Munisport Landfill Superfund Site from the NPL. Although EPA issued an amendment to the ROD in September 1997 that provided for no further action under CERCLA, proper closure of the landfill and response to groundwater contamination is warranted in accordance with State and local regulations. EPA continues to encourage the State and County in this effort. Reports that contain extensive Site characterization information are available for review, along with the ROD and ROD Amendment, in the Administrative Record for this Site and are located with the deletion docket.

Dated: May 26, 1999.

John H. Hankinson, Jr.,

Regional Administrator, Region IV.

[FR Doc. 99–15976 Filed 6–24–99; 8:45 am]

BILLING CODE 6560–50–P

FEDERAL MARITIME COMMISSION

46 CFR Parts 515, 520, 530 and 535

[Docket No. 99–10]

Ocean Common Carriers Subject to the Shipping Act of 1984

AGENCY: Federal Maritime Commission.

ACTION: Proposed rule.

SUMMARY: The Federal Maritime Commission proposes to amend its regulations implementing the Shipping Act of 1984 to clarify the definition of ''ocean common carrier'' to reflect the Commission's current interpretation of the term. As a result, only ocean common carriers that operate vessels in at least one United States trade will be subject to these rules.

DATES: Comments due August 24, 1999.

ADDRESSES: Send comments (original and fifteen copies) to: Bryant L. VanBrakle, Secretary, Federal Maritime Commission, 800 North Capitol Street, NW., Room 1046, Washington, DC 20573, (202) 523–5725.

FOR FURTHER INFORMATION CONTACT: Thomas Panebianco, General Counsel, Federal Maritime Commission, 800 North Capitol Street, NW., Room 1018, Washington, DC 20573, (202) 523–5740.

SUPPLEMENTARY INFORMATION: In one of its several rulemaking proceedings to implement the Ocean Shipping Reform Act of 1998, Pub. L. 105–258, 112 Stat. 1902 (''OSRA''), the Federal Maritime Commission (''FMC'' or ''Commission'') proposed to amend its regulations governing agreements among ocean common carriers and marine terminal operators. Docket No. 98–26, *Ocean Common Carrier and Marine Terminal Operator Agreements Subject to the Shipping Act of 1984,* 64 FR 11236, March 8, 1999. One of the proposed changes was a new definition of ''ocean common carrier'' to address perceived deficiencies in the definition of that term contained in section 3(16) of the Shipping Act of 1984 (''1984 Act''), 46 U.S.C. app. § 1702(16), (''a vessel-operating common carrier''), and to clarify the dividing line between ocean common carriers and non-vessel-operating common carriers (''NVOCCs''). The proposed rule sated that:

> *Ocean common carrier* means a common carrier that operates, for all or part of its common carrier service, a vessel on the high seas or the Great Lakes between a port in the United States and a port in a foreign country, except that the term does not include a common carrier engaged in ocean transportation by ferry boat, ocean tramp, or chemical parcel-tanker.

The Commission received comments on this particular aspect of the proposed rule from Croatia Line and the Council of European & Japanese National Shipowners Association (''CENSA''). While generally supporting the Commission's proposed definition, CENSA suggested that it be further clarified to include a carrier that provides part of a vessel service in a U.S. trade. In addition, Croatia Line claimed that the Commission failed to disclose the facts necessitating such a change, and failed to discuss the effects of the changes on regulated parties. Croatia Line also argued that the proposed definition would adversely affect it, since it is party to two space charter agreements and does not operate vessels making direct calls at U.S. ports. It further argued that the proposal was contrary to the clear language of the 1984 Act and well-established precedent. Croatia Line suggested that changes not required by OSRA should not be subject to such a short comment period.

In light of these comments, and the absence of additional comments from other potentially affected parties, the Commission decided to provide an additional opportunity to comment, 64 FR 11236, March 8, 1999. Accordingly, the Commission is initiating this rulemaking proceeding to further consider the definition of ''ocean common carrier.'' In addition, because the definition of ocean common carrier appears not only in the agreement rules but also in the rules governing ocean transportation intermediaries (part 515), tariffs (part 520), and service contracts (part 530), the Commission is proposing to adopt a definition that is consistent for all rules.

As explained in the preamble to the proposed rule in Docket No. 98–26, the amended definition of ''ocean common carrier'' is proposed to resolve uncertainty generated by the 1984 Act's definition, which is simply ''a vessel-operating common carrier.'' At issue is how to distinguish between ocean common carriers and NVOCCs. The distinction, which was first codified in 1984, has significant implications, inasmuch as the 1984 Act affords ocean carriers, but not NVOCCs, antitrust immunity and other rights and responsibilities, including the ability to offer service contracts. The need for clarity in this area is continued by OSRA, which continues to differentiate between vessel-operating and non-vessel-operating lines with regard to service contracting and other areas.

At first glance, it is difficult to see the ambiguity in the phrase ''vessel-operating.'' However, the Commission's staff has encountered a number of complex situations regarding where and when vessels are operated, and what types of vessels are involved. In this regard, various bureaus have taken the position that an ''ocean common carrier'' is a common carrier that, in providing a common carrier service, operates a vessel calling at a U.S. port. Moreover, if a carrier is an ocean common carrier in one U.S. trade, it has been reasoned, it is an ocean common carrier for all U.S. trades. For example, if a carrier operates vessels from the U.S. East Coast to northern Europe, it has the legal ''status'' of ocean common carrier to enter into space charter agreements for any U.S.-foreign trade.

The proposed definition codifies this approach. It would continue the practice of determining status on a multi-trade basis (*i.e.*, an ocean common carrier in one U.S. trade has that status in all U.S. trades). Any interpretation of the statute requiring status determinations to be made on a trade-by-trade basis would be administratively impractical and might prompt less than efficient redeployment of vessels in the U.S. trades solely to meet regulatory requirements.

The proposed definition would also clarify the issue of whether companies that operate vessels only outside the U.S.—*i.e.*, they have no vessel operations to U.S. ports—can be deemed ''ocean common carriers.'' It appears from the legislative intent of the 1984 Act that Congress viewed vessel operators as those whose vessels call at U.S. ports and classified all other common carriers in U.S. commerce as non-vessel-operating common carriers. For example, in its report on the 1984 Act, the Senate Commerce, Science, and Transportation Committee observed:

> The Committee strongly believes that it is in our national interest to permit cooperation among carriers serving our foreign trades to permit efficient and reliable service. * * * Our carriers need; a stable, predictable, and profitable trade with a rate of return that warrants reinvestment and a commitment to serve the trade; greater security in investment * * *.

S. Rep. No. 3, 98th Cong., 1st Sess. 9 (1983). We do not believe that Congress intended to provide special privileges or protections to carriers that have not made the financial commitment to providing vessel service to the United States.

A definition of ocean common carrier that encompassed companies that operate vessels only in foreign-to-foreign trades would substantially broaden the scope of antitrust immunity potentially to include a number of small operators whose wholly foreign vessel operations would be difficult for the Commission to monitor or verify. Such a finding would remove such companies from the scope of the Act's NVOCC bonding requirements, even though they have no vessels or assets in the United States that can be attached to satisfy a Commission or U.S. court judgment. Such an approach would also seem to contravene the longstanding judicial policy of narrowly construing antitrust exemptions. *See, e.g., Federal Maritime Commission* v. *Seatrain Lines, Inc.*, 411 U.S. 726, 733 (1973). In addition, from the text of the Act, it appears likely that when Congress used the unadorned term ''vessel'' in the definition of ocean common carrier, it was referring to the vessels specified in the definition of common carrier, *i.e.*, those that operate on the high seas or Great Lakes between the United States and a foreign country.

The proposed definition would continue the policy that the vessels in question must be used in a common carrier service. If an NVOCC operates tankers or tramp vessels, wholly apart from its common carrier service, it does not secure ocean common carrier status from those vessel operations.

The Chairman certifies, pursuant to section 605 of the Regulatory Flexibility Act, 5 U.S.C. 605, that the proposed rules will not, if promulgated, have a significant impact on a substantial number of small entities. The affected universe of parties is limited to ocean common carriers or passenger vessel operators. The Commission has determined that these entities do not come under the programs and policies mandated by the Small Business Regulatory Enforcement Fairness Act as they typically exceed the threshold figures for number of employees and/or annual receipts to qualify as a small entity under Small Business Administration Guidelines.

List of Subjects

46 CFR Part 515

Exports; Freight forwarders; Non-vessel-operating common carriers; Ocean transportation intermediaries; Licensing requirements; Financial responsibility requirements; Reporting and recordkeeping requirements.

46 CFR Part 520

Common carrier; Freight; Intermodal transportation; Maritime carriers; Reporting and recordkeeping requirements.

46 CFR Part 530

Freight; Maritime carriers; Reporting and recordkeeping requirements.

46 CFR Part 535

Administrative practice and procedure; Maritime carriers; Reporting and recordkeeping requirements.

Therefore, for the reasons set forth above, Parts 515, 520, 530, and 535 of Subchapter C of Title 46 Code of Federal Regulations, are proposed to be amended as follows:

PART 515—LICENSING, FINANCIAL RESPONSIBILITY REQUIREMENTS, AND GENERAL DUTIES FOR OCEAN TRANSPORTATION INTERMEDIARIES

1. The authority citation for part 515 continues to read as follows:

Authority: 5 U.S.C. 553; 31 U.S.C. 9701; 46 U.S.C. app. 1702, 1707, 1710, 1712, 1714, 1716, and 1718, 21 U.S.C. 862; Pub. L. 105–383, 112 Stat. 3411.

2. In § 515.2 revise paragraph (m) to read as follows:

§ 515.2 Definitions

* * * * *

(m) *Ocean common carrier* means a common carrier that operates, for all or part of its common carrier service, a vessel on the high seas or the Great Lakes between a port in the United States and a port in a foreign country, except that the term does not include a common carrier engaged in ocean transportation by ferry boat, ocean tramp, or chemical parcel-tanker.

* * * * *

PART 520—CARRIER AUTOMATED TARIFF SYSTEMS

1. The authority citation for part 520, is revised to read as follows:

Authority: 5 U.S.C. 553; 46 U.S.C. app. 1701–1702, 1707–1709, 1712, 1716; sec. 424 of Pub. L. 105–383, 112 Stat. 3411.

2. In § 520.2 revise the definitions of ocean common carrier to read as follows:

§ 520.2 Definitions

* * * * *

Ocean common carrier means a common carrier that operates, for all or part of its common carrier service, a vessel on the high seas or the Great Lake between a port in the United States and a port in a foreign country, except that the term does not include a common carrier engaged in ocean transportation by ferry boat, ocean tramp, or chemical parcel-tanker.

* * * * *

PART 530—SERVICE CONTRACTS

1. The authority citation for part 530 continues to read as follows:

Authority: 5 U.S.C. 553; 46 U.S.C. app. 1704, 1705, 1716.

2. In § 530.3 revise paragraph (n) to read as follows:

§ 530.3 Definitions.

(n) *Ocean common carrier* means a common carrier that operates, for all or part of its common carrier service, a vessel on the high seas or the Great Lakes between a port in the United States and a port in a foreign country, except that the term does not include a common carrier engaged in ocean transportation by ferry boat, ocean tramp, or chemical parcel-tanker.

* * * * *

PART 535—AGREEMENTS BY OCEAN COMMON CARRIERS AND OTHERS SUBJECT TO THE SHIPPING ACT OF 1984.

1. The authority citation for part 535 is revised to read as follows:

Authority: 5 U.S.C. 553; 46 U.S.C. app. 1702–1704, 1706–1707; 1709–1710, 1712 and 1714–1717.

2 Revise § 535.101 to read as follows:

§ 535.101 Authority.

The rules in this part are issued pursuant to the authority of section 4 of the Administrative Procedure Act (5 U.S.C. 553), sections 2, 3, 4, 5, 6, 7, 8, 10, 11, 13, 15, 16, and 17 of the Shipping Act of 1984 (''the Act''), and the Ocean Shipping Reform Act of 1998, Pub. L. 105–258, 112 Stat. 1902.

3. In § 535.104 revise paragraph (u) to read as follows:

§ 535.104 Definitions.

* * * * *

(u) *Ocean common carrier* means a common carrier that operates, for all or part of its common carrier service, a vessel on the high seas or the Great Lakes between a port in the United States and a port in a foreign country, except that the term does not include a common carrier engaged in ocean transportation by ferry boat, ocean tramp, or chemical parcel-tanker.

* * * * *

By the Commission.

Byrant L. VanBrakle,

Secretary.

[FR Doc. 99–16036 Filed 6–24–99; 8:45 am]

BILLING CODE 6730–01–M

DEPARTMENT OF TRANSPORTATION

49 CFR Part 1121

[STB Ex Parte No. 527 (Sub-No. 2)]

Expedited Procedures for Processing Rail Rate Reasonableness, Exemption and Revocation Proceedings

AGENCY: Surface Transportation Board, DOT.

ACTION: Notice of proposed rulemaking.

SUMMARY: The Surface Transportation Board (Board) is proposing to modify the regulations concerning exemption and revocation proceedings. The proposal would clarify when additional information or public comment will be sought in response to a petition for a class exemption or a petition for an individual exemption.

DATES: Comments are due July 26, 1999.

ADDRESSES: Send comments referring to STB Ex Parte No. 527 (Sub-No. 2) to: Surface Transportation Board, Office of the Secretary, Case Control Unit, 1925 K Street, NW., Washington, DC 20423–0001.

FOR FURTHER INFORMATION CONTACT: Thomas J. Stilling, (202) 565–1567. (TDD for the hearing impaired: (202) 565–1695.)

SUPPLEMENTARY INFORMATION: The Board's predecessor, the Interstate Commerce Commission (ICC), issued rules concerning exemption and revocation proceedings in *Rail Exemption Procedures,* 8 I.C.C.2d 114 (1991). These rules generally codified the procedures for handling rail exemption petitions issued in *Modification of Procedure for Handling Exemptions Filed under 49 U.S.C. 10505,* Ex Parte No. 400 (ICC served Dec. 29, 1980, and Jan. 21, 1981).

In response to changes resulting from the ICC Termination Act of 1995, Pub. L. 104–88, 109 Stat. 803 (1995) (ICCTA), the Board modified its rail exemption procedures in *Expedited Procedures for Processing Rail Rate Reasonableness, Exemption and Revocation Proceedings,* Ex Parte No. 527 (STB served Oct. 1, 1996) *(Expedited Procedures),* modified by decision served Nov. 15, 1996, *aff'd sub nom. United Transp. Union-Ill. Legis. Bd.* v. Surface Transp. Bd., 132 F.3d 71 (D.C. Cir. 1998). As relevant here, the current regulations (49 CFR 1121.4(c))] state:

If the impact of the proposed exemption cannot be ascertained from the information contained in the petition or accompanying submissions, or significant adverse impacts might occur if the proposed exemption were granted, or a class exemption is sought, the Board will:

(1) Direct that additional information be filed; or

(2) Publish a notice in the **Federal Register** requesting public comments.

Other than updating the language to refer to the Board rather than the ICC, this rule is identical to the former rule at 49 CFR 1121.4(d) except that it specifically states that the Board will seek additional information or public comments when a class exemption is sought, and it does not contain the phrase ''in its discretion'' but rather states that the agency ''will,'' rather than ''may,'' seek additional information or public comment.[1]

In our decision in *San Joaquin Valley Railroad Company—Abandonment Exemption—In Kings and Fresno Counties, CA,* STB Docket No. AB–398 (Sub-No. 4X) (STB served Mar. 5, 1999) (*San Joaquin*), slip op. at 7 (emphasis supplied), we noted that ''(s)ection 1121.4(c)(1) * * * can be interpreted as mandating that the Board seek comments in situations where a class exemption is sought, and whenever the impact of a proposed individual exemption cannot be determined or if there would be significant adverse impacts if an exemption were granted.'' But we stated that, while the filing of additional comments would be sought for class exemption requests, we have the discretion to determine whether additional evidence would be necessary in individual exemption proceedings:

Our discussion of this matter in Expedited Procedures at 14 and n.23 does not state that we wished to cede our discretion to seek comments in individual exemption requests, and we could not have intended such a result in modifying §1121.4(c)(1). While the rule and the language might be literally read to require solicitation of comments, it cannot be logically interpreted to do so. To follow such an interpretation, the Board could never deny a petition if it believed that significant adverse impacts would result from the grant of an individual exemption. Instead, we would be required to continually seek additional information where a petitioner had failed to show that the applicable statutory requirements had been met, unless, at some point, the petitioner were to actually make the necessary showing. *Id.*

We indicated in San Joaquin that we would clarify the § 1121.4(c)(1) issue in a separate proceeding. *Id.*

Accordingly, we propose to modify §1121.4(c) to make clear the treatment that will be accorded petitions for class exemptions and individual exemptions. Class exemptions are codified in the Code of Federal Regulations and are rules of general applicability and, accordingly, public comment is necessary before such an exemption is granted. Thus, when a class exemption is sought, we will require that additional information or public comments be filed before granting the new class exemption. This is consistent with our statement in *Expedited Procedures* at 14 (footnote omitted) that we would ''provide for public comment in all class exemption requests.'' We also propose to modify the rule to state that seeking public comment is not required to deny the petition. Petitioners have an initial burden of showing that a class exemption proceeding is warranted, and if they fail to meet this burden, it serves no purpose to require us to seek additional evidence (although we retain the discretion to do so.)

We are also proposing to modify the rule to make clear that where the impact of an individual exemption cannot be ascertained from the petition or if significant adverse impacts might occur if the individual exemption were granted, we have the discretion to seek additional information or comment. In light of our discussion in *San Joaquin* (indicating the possibility of our repeatedly seeking additional evidence), this revision would rationalize the rule.

In most situations involving individual exemptions, the record will be sufficient to enable us to determine whether to grant or deny the petition. In cases where the determination to grant or deny a petition is not clear-cut, the modification we are proposing would allow us, in our discretion, to seek further information. The proposed rule comports with traditional ICC and Board practice.

Because these proposed modifications are simply clarifications of the rule and do not entail any substantive changes to Board procedures, we believe that we could adopt the modifications without notice and comment.[2] Nevertheless, we will allow interested persons to comment on our proposal.

The Regulatory Flexibility Act does not apply to this action, because, as noted above, the Board is not required to publish a notice of proposed rulemaking. See 5 U.S.C. 603.

---

[1] Former 49 CFR 1121.4(d) read:

If the impact of the proposed exemption cannot be ascertained from the information contained in the petition or accompanying submissions, or significant adverse impacts might occur if the proposed exemption were granted, the Commission, in its discretion, may:

(1) Direct that additional information be filed; or

(2) Publish a notice in the **Federal Register** requesting public comments.

[2] Under the Administrative Procedure Act, ''interpretative rules, general statements of policy and rules of agency organization, procedure, or practice'' are exempted from requirement of notice and comment. 5 U.S.C. 553(b)(A).

Nevertheless, we certify that the proposed rule will not have a significant economic impact on a substantial number of small entities, because it constitutes no substantive change to Board procedures.

This action will not significantly affect either the quality of the human environment or the conservation of energy resources.

List of Subjects in 49 CFR Part 1121

Administrative practice and procedure, Rail exemption procedures, Railroads.

Decided: June 15, 1999

By the Board, Chairman Morgan, Vice Chairman Clyburn, and Commissioner Burkes.

Vernon A. Williams,

Secretary.

For the reasons set forth in the preamble, title 49, chapter X, part 1121 of the Code of Federal Regulations is amended to read as follows:

PART 1121—RAIL EXEMPTION PROCEDURES

1. The authority citation for part 1121 is revised to read as follows:

Authority: 49 U.S.C. 10502 and 10704.

2. In § 1121.4, paragraph (c) is proposed to be revised to read as follows:

§ 1121.4 Procedures.

* * * * *

(c)(1) If the impact of the proposed individual exemption cannot be ascertained from the information contained in the petition or accompanying submissions, or significant adverse impacts might occur if the proposed exemption were granted, the Board may, in its discretion:

(i) Direct that additional information be filed; or

(ii) Publish a notice in the **Federal Register** requesting public comments.

(2) If a class exemption is sought, the Board will publish a notice in the **Federal Register** requesting public comments before granting the class exemption. The Board may deny a request for a class exemption without seeking public comments.

* * * * *

[FR Doc. 99–16130 Filed 6–24–99; 8:45 am]

BILLING CODE 4915–00–P

Notices

Federal Register
Vol. 64, No. 122
Friday, June 25, 1999

This section of the FEDERAL REGISTER contains documents other than rules or proposed rules that are applicable to the public. Notices of hearings and investigations, committee meetings, agency decisions and rulings, delegations of authority, filing of petitions and applications and agency statements of organization and functions are examples of documents appearing in this section.

DEPARTMENT OF AGRICULTURE

Agricultural Research Service

Notice of Intent To Grant Exclusive License

AGENCY: Agricultural Research Service, USDA.

ACTION: Notice of intent.

SUMMARY: Notice is hereby given that the U.S. Department of Agriculture, Agricultural Research Service, intends to limit the number of licenses granted for U.S. Patent Nos. 4,871,615 (S.N. 06/818,567), 4,851,291 (S.N. 07/055,476) and 4,908,238 (S.N. 07/371,779), all entitled, ''Temperature Adaptable Textile Fibers and Method of Preparing Same,'' to the two licenses previously granted to Wisconsin Global Technologies, Ltd. of Black River Falls, Wisconsin and to Bayshore Absorbent Products, Inc. of New York, New York. The Agricultural Research Service intends to grant no additional licenses for these patents. Notice of Availability for Serial Nos. 06/818,567 and 07/055,476 was published in the **Federal Register** on July 18, 1990. Serial No. 07/371,779 is a division of Serial No. 07/055,476.

DATES: Comments must be received on or before August 24, 1999.

ADDRESSES: Send comments to: USDA, ARS, Office of Technology Transfer, 5601 Sunnyside Avenue, Room 4–1158, Beltsville, Maryland 20705–5131.

FOR FURTHER INFORMATION CONTACT: June Blalock of the Office of Technology Transfer at the Beltsville address given above; telephone: 301–504–5989.

SUPPLEMENTARY INFORMATION: The Federal Government's patent rights to this invention are assigned to the United States of America, as represented by the Secretary of Agriculture. It is in the public interest to so license this invention as Wisconsin Global Technologies, Ltd. and Bayshore Absorbent Products, Inc. have each submitted complete and sufficient applications for a license. The prospective co-exclusive licenses will be royalty-bearing and will comply with the terms and conditions of 35 U.S.C. 209 and 37 CFR 404.7. The prospective co-exclusive licenses may be granted unless, within sixty (60) days from the date of this published Notice, the Agricultural Research Service receives written evidence and argument which establishes that the grant of the license would not be consistent with the requirements of 35 U.S.C. 209 and 37 CFR 404.7.

Richard M. Parry, Jr.,

Assistant Administrator.

[FR Doc. 99–16211 Filed 6–24–99; 8:45 am]

BILLING CODE 3410–03–P

COMMITTEE FOR PURCHASE FROM PEOPLE WHO ARE BLIND OR SEVERELY DISABLED

Procurement List; Proposed Additions and Deletions

AGENCY: Committee for Purchase From People Who Are Blind or Severely Disabled.

ACTION: Proposed additions to and deletions from Procurement List.

SUMMARY: The Committee has received proposals to add to the Procurement List services to be furnished by nonprofit agencies employing persons who are blind or have other severe disabilities, and to delete commodities previously furnished by such agencies.

COMMENTS MUST BE RECEIVED ON OR BEFORE: July 26, 1999.

ADDRESSES: Committee for Purchase From People Who Are Blind or Severely Disabled, Crystal Gateway 3, Suite 310, 1215 Jefferson Davis Highway, Arlington, Virginia 22202–4302.

FOR FURTHER INFORMATION CONTACT: Beverly Milkman (703) 603–7740.

SUPPLEMENTARY INFORMATION: This notice is published pursuant to 41 U.S.C. 47(a)(2) and 41 CFR 51–2.3. Its purpose is to provide interested persons an opportunity to submit comments on the possible impact of the proposed actions.

Additions

If the Committee approves the proposed additions, all entities of the Federal Government (except as otherwise indicated) will be required to procure the services listed below from nonprofit agencies employing persons who are blind or have other severe disabilities.

I certify that the following action will not have a significant impact on a substantial number of small entities. The major factors considered for this certification were:

1. The action will not result in any additional reporting, recordkeeping or other compliance requirements for small entities other than the small organizations that will furnish the services to the Government.

2. The action will result in authorizing small entities to furnish the services to the Government.

3. There are no known regulatory alternatives which would accomplish the objectives of the Javits-Wagner-O'Day Act (41 U.S.C. 46–48c) in connection with the services proposed for addition to the Procurement List. Comments on this certification are invited. Commenters should identify the statement(s) underlying the certification on which they are providing additional information.

The following services have been proposed for addition to Procurement List for production by the nonprofit agencies listed:

Food Service

Fort Lee, Virginia
NPA: Goodwill Services, Inc., Richmond, Virginia

Grounds Maintenance

U.S. Environmental Protection Agency, Western Ecology Division, Environmental Effects Laboratory, 200 SW 35th Street, Willamette Research Station, 1350 SE Goodnight Avenue, Corvallis, Oregon
NPA: Willamette Valley Rehabilitation Center, Lebanon, Oregon

Janitorial/Custodial

DLA Gadsden Depot, Gadsden, Alabama
NPA: Darden Rehabilitation Foundation, Gadsden, Alabama

Janitorial/Custodial

U.S. Army Reserve Center, Danbury, Connecticut
NPA: Greater Enfield Allied Rehabilitation Centers, Inc., Enfield, Connecticut

Janitorial/Custodial

Centers for Disease Control and Prevention, Chamblee and Lawrenceville, Georgia
NPA: Goodwill Industries of Atlanta, Inc., Atlanta, Georgia

Janitorial/Custodial

U.S. Fish and Wildlife Service, Wallkill River National Wildlife Refuge Office, 1547 County Rte 565, Sussex, New Jersey
NPA: SCARC, Inc., Augusta, New Jersey

Janitorial/Custodial

Basewide (excluding Gymnasium), Fort Sam Houston, Texas
NPA: Development Resources, Inc., San Antonio, Texas

Laundry and Dry Cleaning Services

Fort Belvoir, Virginia
NPA: Rappahannock Goodwill Industries, Inc., Fredericksburg, Virginia

Mailroom Operation

Department of Housing and Urban Development, Russell Federal Building, Atlanta, Georgia
NPA: Nobis Enterprises, Inc., Marietta, Georgia

Management Services

U.S. Department of Housing & Urban Development, 1600 North Broadway, Santa Ana, California
NPA: Pacific Coast Community Services, Alameda, California

Operation of Postal Service Center

MacDill Air Force Base, Florida
NPA: JobWorks, Inc. St. Petersburg, Florida

Recycling Service

Davis-Monthan Air Force Base, Arizona
NPA: Arizona Training Program at Tucson, Tucson, Arizona

Deletions

I certify that the following action will not have a significant impact on a substantial number of small entities. The major factors considered for this certification were:

1. The action will not result in any additional reporting, recordkeeping or other compliance requirements for small entities.

2. The action will result in authorizing small entities to furnish the commodities to the Government.

3. There are no known regulatory alternatives which would accomplish the objectives of the Javits-Wagner-O'Day Act (41 U.S.C. 46–48c) in connection with the commodities proposed for deletion from the Procurement List.

The following commodities have been proposed for deletion from the Procurement List:

Pillowcase, Disposable
6532–01–125–3269
Blanket, Bed/Bath (Flame Resistant)
7210–01–141–2458
Cover, Mattress (Plastic)
7210–00–082–5739

Louis R. Bartalot,

Deputy Director (Operations).

[FR Doc. 99–16212 Filed 6–24–99; 8:45 am]

BILLING CODE 6353–01–P

COMMITTEE FOR PURCHASE FROM PEOPLE WHO ARE BLIND OR SEVERELY DISABLED

Procurement List Additions

AGENCY: Committee for Purchase From People Who Are Blind or Severely Disabled.

ACTION: Additions to the procurement list.

SUMMARY: This action adds to the Procurement List services to be furnished by nonprofit agencies employing persons who are blind or have other severe disabilities.

EFFECTIVE DATE: July 26, 1999.

ADDRESSES: Committee for Purchase From People Who Are Blind or Severely Disabled, Crystal Gateway 3, Suite 310, 1215 Jefferson Davis Highway, Arlington, Virginia 22202–4302.

FOR FURTHER INFORMATION CONTACT: Beverly Milkman (703) 603–7740.

SUPPLEMENTARY INFORMATION: On January 29, April 16 and May 7, 1999, the Committee for Purchase From People Who Are Blind or Severely Disabled published notices (64 F.R. 4638, 18877 and 24570) of proposed additions to the Procurement List.

After consideration of the material presented to it concerning capability of qualified nonprofit agencies to provide the services and impact of the additions on the current or most recent contractors, the Committee has determined that the services listed below are suitable for procurement by the Federal Government under 41 U.S.C. 46–48c and 41 CFR 51–2.4.

I certify that the following action will not have a significant impact on a substantial number of small entities. The major factors considered for this certification were:

1. The action will not result in any additional reporting, recordkeeping or other compliance requirements for small entities other than the small organizations that will furnish the services to the Government.

2. The action will not have a severe economic impact on current contractors for the services.

3. The action will result in authorizing small entities to furnish the services to the Government.

4. There are no known regulatory alternatives which would accomplish the objectives of the Javits-Wagner-O'Day Act (41 U.S.C. 46—48c) in connection with the services proposed for addition to the Procurement List.

Accordingly, the following services are hereby added to the Procurement List:

Administrative Services

GSA Regional Emergency Management Control Center, GSA Complex, Auburn, Washington

Commissary Shelf Stocking, Custodial and Warehousing

McChord Air Force Base, Washington

Janitorial/Custodial

Basewide, Fort Carson, Colorado

This action does not affect current contracts awarded prior to the effective date of this addition or options that may be exercised under those contracts.

Louis R. Bartalot

Deputy Director (Operations).

[FR Doc. 99–16213 Filed 6–24–99; 8:45 am]

BILLING CODE 6353–01–P

DEPARTMENT OF COMMERCE

Foreign-Trade Zones Board

[Order No. 1042]

Expansion of Foreign-Trade Zone 15; Kansas City, MO

Pursuant to its authority under the Foreign-Trade Zones Act of June 18, 1934, as amended (19 U.S.C. 81a–81u), the Foreign-Trade Zones Board (the Board) adopts the following Order:

Whereas, the Greater Kansas City Foreign-Trade Zone, Inc., grantee of Foreign-Trade Zone 15, submitted an application to the Board for authority to expand FTZ 15 to include eight sites in Chillicothe, Missouri, within the Kansas City Customs port of entry (FTZ Docket 82–97, filed 12/15/97; amended 11/8/98 to withdraw three of the proposed sites);

Whereas, notice inviting public comment was given in the **Federal Register** (63 FR 205, 1/5/98) and the application has been processed pursuant to the FTZ Act and the Board's regulations; and,

Whereas, the Board adopts the findings and recommendations of the examiner's report, and finds that the requirements of the FTZ Act and Board's regulations would be satisfied, and that the proposal would be in the public interest if approval is limited to three sites subject to certain conditions;

Now, Therefore, the Board hereby orders:

The application to expand FTZ 15 is approved in part, subject to the Act and the Board's regulations, including Section 400.28, and further subject to the following limitations and restrictions:

1. Approval is limited to Sites 7a (MidWest Quality Gloves, Inc.), 7b (Chillicothe-Brunswick Rail Yard), and 7c (Chillicothe Industrial Park);

2. Site 7a is approved for a period ending May 31, 2002;

3. Authority for each of Sites 7b and 7c shall be subject to a sunset provision that terminates the authority for the site on May 31, 2004, unless the site is activated pursuant to 19 CFR Part 146 of the U.S. Customs Service regulations;

4. Sites 7d, 7e, 7f, 7g and 7h are not approved; and,

5. The overall zone project is subject to the Board's standard 2,000-acre activation limit.

Signed at Washington, DC, this 17th day of June, 1999.

Robert S. LaRussa,

Assistant Secretary of Commerce for Import Administration, Alternate Chairman, Foreign-Trade Zones Board.

Attest:

Dennis Puccinelli,

Acting Executive Secretary.

[FR Doc. 99–16246 Filed 6–24–99; 8:45 am]

BILLING CODE 3510–DS–P

DEPARTMENT OF COMMERCE

Foreign-Trade Zones Board

[Order No. 1038]

Grant of Authority for Subzone Status; Borg-Warner Automotive Powertrain Systems Corporation (Automotive Transfer Cases); Seneca, SC; Correction

The **Federal Register** notice (64 FR 32845, 6–18–99) describing Foreign-Trade Zones Board Order 1038 (approved 6–3–99) authorizing special-purpose subzone status for the automotive transfer case manufacturing plant of Borg-Warner Automotive Powertrain Systems Corporation (Inc.) (Subzone 38B), located in Seneca, South Carolina, is corrected as follows:

Paragraph 4, Sentence 1, should read ''* * * (FTZ Docket 33–98, filed 6–23–98);''

Dated: June 21, 1999.

Dennis Puccinelli,

Acting Executive Secretary.

[FR Doc. 99–16247 Filed 6–24–99; 8:45 am]

BILLING CODE 3510–DS–P

DEPARTMENT OF COMMERCE

Foreign-Trade Zones Board

[Docket 31–99]

Foreign-Trade Zone 149—Freeport, Texas; Application for Foreign-Trade Subzone Status; Dow Chemical Company (Petrochemical Complex), Brazoria County, Texas

An application has been submitted to the Foreign-Trade Zones Board (the Board) by the Brazos River Harbor Navigation District, grantee of FTZ 149, requesting special-purpose subzone status for the petrochemical complex of Dow Chemical Company (Dow), located in Brazoria County, Texas. The application was submitted pursuant to the provisions of the Foreign-Trade Zones Act, as amended (19 U.S.C. 81a–81u), and the regulations of the Board (15 CFR part 400). It was formally filed on June 15, 1999.

The Dow petrochemical complex (8,555 acres, 5,300 employees) consists of five sites in Brazoria County, Texas: *Site 1:* Plant A petrochemical manufacturing facility and marine terminal (1,571 acres) located adjacent to Port Freeport at FM 1495; *Site 2:* Plant B petrochemical manufacturing facility (3,077 acres) located at State Hwy. 288–B and State Hwy. 332, north of the Brazos River; *Site 3:* Oyster Creek petrochemical manufacturing facility (825 acres) located at the intersection of State Hwy. 332 and Route FM 523; *Site 4:* Oyster Creek expansion site (904 acres) located adjacent to Site 3 south of the intersection of State Hwy. 332 and east of Route FM 523; and *Site 5:* Stratton Ridge storage facility (13 underground caverns with 15.3 billion-pound storage capacity on 2,178 acres) located south of Route FM 523 and intersected by County Road 226. The olefins plants (5,300 employees) produce a variety of petrochemical feedstocks and fuel products, including ethylene (3.3 billion-lb. capacity), propylene (865 million-lb. capacity), butadiene (425 million-lb. capacity) and pyrolysis gasoline (875 million-lb. capacity), propane, benzene, and naphtha. Some 37 percent of the inputs, including fuel oil, naphtha, condensate, and natural gasoline, are sourced abroad.

Zone procedures would exempt the petrochemical complex from Customs duty payments on the foreign products used in its exports. On domestic sales, the company would be able to choose the Customs duty rates that apply to certain petrochemical feedstocks (duty-free) by admitting incoming foreign inputs (e.g. naphtha, fuel oil, and condensates) in non-privileged foreign status. The duty rates on inputs range from 5.2¢/barrel to 10.5¢/barrel. Under the FTZ Act, certain merchandise in FTZ status is exempt from *ad valorem* inventory-type taxes. The application indicates that the savings from zone procedures would help improve the refinery's international competitiveness.

In accordance with the Board's regulations, a member of the FTZ Staff has been designated examiner to investigate the application and report to the Board.

Public comment is invited from interested parties. Submissions (original and 3 copies) shall be addressed to the Board's Executive Secretary at the address below. The closing period for their receipt is August 24, 1999. Rebuttal comments in response to material submitted during the foregoing period may be submitted during the subsequent 15-day period (to September 8, 1999).

A copy of the application and accompanying exhibits will be available for public inspection at each of the following locations:

U.S. Department of Commerce, Export Assistance Center, 500 Dallas, Suite 1160, Houston, Texas 77002

Office of the Executive Secretary, Foreign-Trade Zones Board, Room 3716, U.S. Department of Commerce, 14th & Pennsylvania Avenue, NW, Washington, DC 20230

Dated: June 17, 1999.

Dennis Puccinelli,

Acting Executive Secretary.

[FR Doc. 99–16245 Filed 6–24–99; 8:45 am]

BILLING CODE 3510–DS–P

DEPARTMENT OF COMMERCE

International Trade Administration

Industrial Phosphoric Acid from Israel (C–508–605) and Industrial Phosphoric Acid From Belgium (A–423–602): Extension of Time Limit for Final Results of Five-Year Reviews

AGENCY: Import Administration, International Trade Administration, Department of Commerce.

ACTION: Notice of extension of time limit for final results of five-year (''sunset'') reviews.

SUMMARY: The Department of Commerce (''the Department'') is extending the time limit for the final results of the sunset reviews on the antidumping duty order on industrial phosphoric acid from Belgium and the countervailing duty order on industrial phosphoric acid from Israel. Based on adequate

responses from domestic interested parties and respondent interested parties, the Department is conducting full sunset reviews to determine whether revocation of the orders would be likely to lead to continuation or recurrence of dumping or a countervailable subsidy. As a result of this extension, the Department intends to issue its preliminary results not later than September 17, 1999.

EFFECTIVE DATE: June 25, 1999.

FOR FURTHER INFORMATION CONTACT: Scott E. Smith, Martha V. Douthit or Melissa G. Skinner, Import Administration, International Trade Administration, U.S. Department of Commerce, Pennsylvania Avenue and 14th Street, NW, Washington, DC 20230; telephone: (202) 482–6397, (202) 482–3207 or (202) 482–1560 respectively.

Extension of Final Results

The Department has determined that the sunset reviews of the antidumping duty order on industrial phosphoric acid from Belgium and the countervailing duty order on industrial phosphoric acid from Israel are extraordinarily complicated. In accordance with section 751(c)(5)(C)(v) of the Tariff Act of 1930, as amended (''the Act''), the Department may treat a review as extraordinarily complicated if it is a review of a transition order (*i.e.*, an order in effect on January 1, 1995). *See* section 751(c)(6)(C) of the Act. The Department is extending the time limit for completion of the preliminary results of these reviews until not later than September 17, 1999, in accordance with section 751(c)(5)(B) of the Act. The final results of these reviews will, therefore, be due not later than January 25, 2000.

Dated: June 21, 1999.

Richard W. Moreland,

Acting Assistant Secretary for Import Administration.

[FR Doc. 99–16248 Filed 6–24–99; 8:45 am]

BILLING CODE 3510–DS–P

DEPARTMENT OF COMMERCE

International Trade Administration

[A–201–805]

Circular Welded Non-Alloy Steel Pipe and Tube From Mexico: Preliminary Results of Antidumping Duty Administrative Reviews; and Partial Revocation

AGENCY: Import Administration, International Trade Administration, Department of Commerce.

ACTION: Notice of preliminary results of antidumping duty administrative review and partial revocation.

SUMMARY: In response to a request by one respondent, the Department of Commerce (the Department) is conducting two administrative reviews of the antidumping duty order on circular welded non-alloy steel pipe and tube from Mexico (A–201–805). These reviews cover one manufacturer/exporter of the subject merchandise to the United States during two periods of review (POR): April 28, 1992, through October 31, 1993, (the 92/93 POR) and November 1, 1993, through October 31, 1994 (the 93/94 POR).

We have preliminarily determined that sales have been made below the foreign market value (FMV) for the first period of review (POR). If these preliminary results are adopted in our final results of administrative reviews, we will instruct U.S. Customs to assess antidumping duties based upon the difference between the United States price (USP) and the FMV.

Interested parties are invited to comment on these preliminary results. Parties who submit argument in this proceeding are requested to submit with the argument: (1) A statement of the issue; and (2) a brief summary of the argument.

EFFECTIVE DATES: June 25, 1999.

FOR FURTHER INFORMATION CONTACT: John Drury, Nancy Decker or Linda Ludwig, Enforcement Group III—Office 8, Import Administration, International Trade Administration, U.S. Department of Commerce, 14th Street and Constitution Avenue, NW., Room 7866, Washington, DC 20230; telephone (202) 482–0195 (Drury), (202) 482–0196 (Decker), or (202) 482–3833 (Ludwig).

SUPPLEMENTARY INFORMATION:

Applicable Statute and Regulations

Unless otherwise indicated, all citations to the statute and to the Department's regulations are references to the provisions as they existed on December 31, 1994.

Background

The Department published an antidumping duty order on circular welded non-alloy steel pipe and tube from Mexico on November 2, 1992 (57 FR 49453). The Department published a notice of ''Opportunity to Request an Administrative Review'' of the antidumping duty order for the 92/93 POR on November 3, 1993 (58 FR 58682). On November 19, 1993, respondent Hylsa S.A. de C.V. (''Hylsa'') requested that the Department conduct an administrative review of the antidumping duty order on circular welded non-alloy steel pipe and tube from Mexico. On November 30, 1993, respondent Tuberia Nacional S.A. de C.V. (''TUNA'') requested that the Department conduct an administrative review of this order. We initiated this review on January 18, 1994. *See* 59 FR 2593 (January 18, 1994).

The Department published a notice of ''Opportunity to Request an Administrative Review'' of the antidumping duty order for the 93/94 POR on November 10, 1994 (59 FR 56034). On November 29, 1994, respondent Hylsa S.A. de C.V. (''Hylsa'') requested that the Department conduct an administrative review of the antidumping duty order on circular welded non-alloy steel pipe and tube from Mexico. On November 30, 1994, respondent Western American Manufacturing, Inc. (''Western American'') requested that the Department conduct an administrative review of this order. We initiated this review on December 15, 1994. *See* 59 FR 64650 (December 15, 1994).

The Department is conducting these administrative reviews in accordance with section 751 of the Tariff Act of 1930 (''the Act'').

Partial Termination of Review

On November 30, 1995, TUNA withdrew its request for administrative review for the 92/93 POR, pursuant to 19 CFR 353.22(a)(5). Ordinarily, parties have 90 days from the date of publication of notice of initiation within which to withdraw a request for review. In this case, the record indicates that petitioners have no objection to the withdrawal and in fact had previously requested that the Department terminate the review of TUNA (*See* Letter to Secretary of Commerce from R. Alan Luberda, dated May 11, 1994). In addition, the review of TUNA has not progressed substantially and there would be no undue burden on the parties or the Department as a result of said withdrawal. Therefore, the Department has determined that it would be reasonable to grant the withdrawal at this time. In accordance with section 353.22(a)(5) of the Department's regulations, the Department has terminated the 92/93 administrative review insofar as it regards TUNA.

On March 14, 1995, Western American withdrew its request for administrative review for the 93/94 POR, pursuant to 19 CFR 353.22(a)(5). Ordinarily, parties have 90 days from the date of publication of notice of initiation within which to withdraw a request for review. In this case, the

record indicates that petitioners have no objection to the withdrawal. In addition, the review of Western American has not progressed substantially and there would be no undue burden on the parties or the Department as a result of said withdrawal. Therefore, the Department has determined that it would be reasonable to grant the withdrawal at this time. In accordance with section 353.22(a)(5) of the Department's regulations, the Department has terminated the 93/94 administrative review insofar as it regards to Western American.

Scope of the Review

The review of ''circular welded non-alloy steel pipe and tube'' covers products of circular cross-section, not more than 406.4 millimeters (16 inches) in outside diameter, regardless of wall thickness, surface finish (black, galvanized, or painted), or end finish (plain end, beveled end, threaded, or threaded and coupled). Those pipes and tubes are generally known as standard pipe, though they may also be called structural or mechanical tubing in certain applications. Standard pipes and tubes are intended for the low pressure conveyance of water, steam, natural gas, air and other liquids and gases in plumbing and heating systems, air conditioning units, automatic sprinkler systems, and other related uses. Standard pipe may also be used for light load-bearing and mechanical applications, such as for fence tubing, and for protection of electrical wiring, such as conduit shells.

The scope is not limited to standard pipe and fence tubing, or those types of mechanical and structural pipe that are used in standard pipe applications. All carbon steel pipes and tubes within the physical description outlined above are included within the scope of this review, except line pipe, oil country tubular goods, boiler tubing, cold-drawn or cold-rolled mechanical tubing, pipe and tube hollows for redraws, finished scaffolding, and finished rigid conduit. In accordance with the Final Negative Determination of Scope Inquiry (56 FR 11608, March 21, 1996), pipe certified to the API 5L line pipe specification, or pipe certified to both the API 5L line pipe specifications and the less-stringent ASTM A–53 standard pipe specifications, which fall within the physical parameters as outlined above, and entered as line pipe of a kind used for oil and gas pipelines, are outside of the scope of the antidumping duty order.

Imports of these products are currently classifiable under the following Harmonized Tariff Schedule (HTS) subheadings: 7306.3010.00, 7306.30.50.25, 7306.30.50.32, 7306.30.50.40, 7306.30.50.55, 7306.30.50.85, and 7306.30.50.90. These HTS item numbers are provided for convenience and customs purposes. The written descriptions remain dispositive.

The 92/93 POR is April 28, 1992 through October 31, 1993, and the 93/94 POR is November 1, 1993 through October 31, 1994. Subsequent to the partial terminations above, these reviews cover sales of circular welded non-alloy steel pipe and tube by Hylsa.

Verification

As provided in section 782(i)(3) of the Act, we verified information provided by the respondent using standard verification procedures, including on-site inspection of the manufacturer's facilities, the examination of relevant sales and financial records, and selection of original documentation containing relevant information. Our verification results are outlined in the public versions of the verification reports.

Use of Best Information Available (92/93 POR)

Section 776(b) of the Tariff Act provides that, in making a final determination in an administrative review, if the Department ''is unable to verify the accuracy of the information submitted, it shall use the best information available to it as the basis for its action. * * *'' In addition, section 776(c) of the Act requires the Department to use BIA ''whenever a party or any other person refuses or is unable to produce information requested in a timely manner or in the form required, or otherwise significantly impedes an investigation. * * *''

In deciding what to use as BIA, section 353.37(b) of our regulations provides that we may take into account whether a party refuses to provide information. For purposes of these reviews, and in accordance with our practice, we have used the more adverse BIA—generally the highest rate for any company for the same class or kind of merchandise from the same country from this or any prior segment of the proceeding, including the less-than-fair-value (LTFV) investigation—whenever a company refused to cooperate with the Department or otherwise significantly impeded the proceeding. When a company substantially cooperated with our requests for information, but we were unable to verify information it provided or it failed to provide all information requested in a timely manner or in the form requested, we used as BIA the higher of (1) the highest rate (including the ''all others'' rate) ever applicable to the firm for the same class or kind of merchandise from the same country from either the LTFV investigation or a prior administrative review; or (2) the highest calculated rate in this review for any firm for the same class or kind of merchandise from the same country.

We preliminarily determine that the use of best information available (BIA), in accordance with section 776(c) of the Act, is appropriate for Hylsa for the 92/93 POR. We have assigned a cooperative (second-tier) BIA rate to the company for these preliminary results, which is the rate assigned to Hylsa during the original investigation. When a company substantially cooperates with our requests for information but we are unable to verify the information it provided or the company fails to provide complete or accurate information, we assign that company second-tier BIA. (*See Allied Signal* v. *United States*, 996 F.2d 1185 (Fed. Cia. 1993) (concluding that the Department's two-tiered BIA methodology, under which cooperating companies are assigned the lower, ''second tier'' BIA rate, is reasonable).)

Hylsa cooperated with our requests for information and agreed to verification. However, the multiple and pervasive nature of errors and omissions in the information provided by Hylsa prevented the Department from relying on Hylsa's response for these preliminary results. For example, despite our attempts, we were unable to verify either Hylsa's total quantity and value of home-market sales or its value of U.S. sales of subject merchandise. In addition, we found a significant discrepancy between reported and actual third-country sales of subject merchandise. (*See* verification report.)

Establishing the completeness of the response with respect to the quantity and value of sales in both the home and U.S. markets is a very significant element of verification. However, as a result of verification, Hylsa subsequently acknowledged that it had failed to report approximately 10% of its sales of subject merchandise in the home market for the period of review. Moreover, Hylsa did not retain the complete database used to develop its response to the Department. As a result, we were unable to reconcile the quantity and value figures for the home market reported to the Department with the company's audited financial statements. In addition, Hylsa failed to prepare a detailed analysis of home market sales in a pre-selected month of the POR as requested in our verification outline. Finally, Hylsa was unable to

explain the discrepancy in U.S. sales value. (*See* verification report.)

The completeness of both the home market and U.S. sales databases is essential because both are used to calculate the dumping duties. As the Department stated in *Silicon Metal From Brazil: Final Results of Antidumping Duty Administrative Review and Determination Not to Revoke in Part,* 62 FR 1954 (January 14, 1996), it is the obligation of respondents to provide an accurate and complete response prior to verification so that the Department may have the opportunity to analyze fully the information and other parties are able to review and comment on it. Verification is intended to establish the accuracy and completeness of a response rather than to supplement and reconstruct the information to fit the requirements of the Department. ''Establishing the completeness of the response with respect to the sales of the subject merchandise in the United States is a very significant element of the verification.'' *Antifriction Bearings (Other Than Tapered Roller Bearings) and Parts Thereof From France, Germany, Italy, Japan, Singapore, Sweden, and the United Kingdom; Final Results of Antidumping Duty Administrative Reviews and Partial Termination of Administrative Reviews,* 61 FR 66742 (December 17, 1996). ''The completeness of the U.S. sales database is essential because it is used to calculate the dumping duties.'' *Id.* It is our practice at verification to examine a selected portion of both databases, rather than the entire database, to test the accuracy and completeness of information that the company provided. The CIT has upheld this practice. *See Bomont Industries* v. *United States,* 733 F. Supp. 1507, 1508 (CIT 1990) (''verification is like an audit, the purpose of which is to test information provided by a party for accuracy and completeness. Normally an audit entails selective examination rather than testing of an entire universe.''); *See also Monsanto Co.* v. *United States,* 698 F.Supp. 275, 281 (CIT 1988) (''verification is a spot check and is not intended to be an exhaustive examination of the respondent's business''). Where the Department finds discrepancies in the portion which it examines, it must judge the effect on the unexamined portion of the response. In the instant case, the loss of a database used to prepare the original response to the Department prevented Hylsa from reconciling aggregate total figures reported to the Department with the company's financial statements. While the company was generally able to tie monthly financial statements to a monthly sales statistics database, it had no explanation as to the remaining discrepancies between this database and the information submitted to the Department.

In addition, the company's admission that it had failed to report approximately 10 percent of home market sales of subject merchandise further throws the reported quantity and value figures into doubt. Since the Department was unable to reconcile aggregate totals, we requested (as we did in the verification outline) that Hylsa prepare a worksheet tying the pre-selected month to the response submitted to the Department. The pre-selected month corresponded to the month when most of the U.S. sales occurred and most likely would have been used in the calculation of the dumping duties. The company stated that it could not prepare the requested worksheet without the missing database for that month. Department officials then requested a listing of sales from a different month in an attempt to tie it to the sales statistics database. When a Department official selected a particular sale and requested supporting documentation, the company was unable to produce it at that time. Late on the last day, Hylsa indicated that it could provide the supporting documentation. By that time, however, there was insufficient time for Department officials to verify and establish the accuracy of the documents. (*See* verification report.)

We believe that the use of total BIA is warranted. The inability of Hylsa to reconcile aggregate quantities and values to its financial statements throws into doubt the accuracy of Hylsa's reported transaction-specific sales. Since such sales are used to calculate FMV on a monthly basis, the addition or omission of home-market sales can have a large impact on the final margin. If there are a small number of sales to the U.S. in relation to the home-market, or sales are bunched in particular months, or certain products are only sold in a limited number of months, or other conditions exist, the potential for distortion or manipulation by omitting or creating home-market sales is particularly great. We must be certain that all sales are reported accurately and completely to address this concern, and reconciling quantity and value is one of the most fundamental ways of ensuring accuracy and completeness. Without that certainty, we do not believe that it is possible to calculate an accurate margin for this POR.

As explained above, the multiple and pervasive nature of errors and omissions in the information provided by Hylsa prevented the Department's reliance on its submissions for these preliminary results. *See, e.g. Yamaha Motor Co., Ltd.* v. *United States,* 910 F.Supp. 679 (CIT 1995) (upholding the Department's use of second-tier BIA where the Department found that respondent's errors and omissions were multiple and pervasive); *National Steel Corp.* v. *United States,* 870 F.Supp. 1130 (CIT 1994) (approving the Department's use of BIA where respondent omitted significant information from submissions); *Tatung Co.* v. *United States,* 18 C.I.T. 1137 (1994) (upholding the Department's use of BIA due to omissions and errors in respondent's submission). Therefore, in accordance with section 776(b) of the Tariff Act, the inability to verify aggregate quantity and value figures was the determining factor in our decision to apply BIA to the company's response for the 92/93 POR. See decision memorandum, February 28, 1997.

Product Comparisons

In accordance with section 771(16) of the Act, for the 93/94 POR, we considered each circular welded non-alloy steel pipe and tube product produced by Hylsa, covered by the descriptions in the ''Scope of the Review'' section of this notice, *supra,* and sold in the home market during the POR, to be such or similar merchandise for purposes of determining appropriate product comparisons to U.S. sales of circular welded non-alloy steel pipe and tube. For each of the products produced by Hylsa within the scope of the A–201–805 order, we examined the categories of merchandise listed in Section 771 (16) of the Act for purposes of model matching. Where there were no sales of identical merchandise in the home market to compare to U.S. sales, we compared U.S. sales to the next most similar foreign like product on the basis of the characteristics listed in Appendix VI of the Department's April 24, 1996 antidumping questionnaire. In making the product comparisons, we matched each foreign like product based on the physical characteristics reported by the respondent and verified by the Department. Where sales were made in the home market on a different weight basis from the U.S. market (e.g. theoretical versus actual weight), we converted all quantities to the same weight basis, using the conversion factors supplied by Hylsa, before making our fair-value comparisons. We compared individual U.S. transactions to monthly weighted average FMVs.

Date of Sale

For the 93/94 POR, depending on the channel of trade and on the date after which the key terms of sale could not be changed, we treated one of the following dates as the date of the sale: The date of the invoice or the date of shipment.

United States Price

All of Hylsa's U.S. sales in the 93/94 POR were based on the price to the first unrelated purchaser in the United States. The Department determined that purchase price, as defined in section 772 of the Tariff Act, was the appropriate basis for calculating USP. We made adjustments to purchase price, where appropriate, for foreign inland freight, foreign brokerage and handling, international freight, insurance, U.S. inland freight, U.S. brokerage and handling, and U.S. Customs duties.

Foreign Market Value

Based on a comparison of the volume of home market and third country sales, we determined that the home market was viable. Therefore, in accordance with section 773(a)(1)(A) of the Act, we based FMV on the packed, delivered price to unrelated purchasers in the home market. Based on our verification of home-market sales responses, we are disallowing an adjustment for a steel supplier rebate. We have previously outlined our reasons for rejecting this adjustment. *See Circular Welded Non-Alloy Steel Pipe and Tube From Mexico: Final Determination of Sales at Less Than Fair Value,* 57 FR 42953 (September 17, 1992) (''this rebate program does not qualify for a circumstance of sale adjustment because it reflects a difference in production costs, rather than a difference in selling expenses. Adjustments for circumstance of sale are, by definition, limited to consideration of a seller's marketing practices and expenses, and are unaffected by conditions affecting production''); *See also Circular Welded Non-Alloy Steel Pipe and Tube From Mexico: Preliminary Results of Antidumping Duty Administrative Review,* 61 FR 68708 (December 30, 1996).

We made adjustments to FMV for differences in cost attributable to differences in physical characteristics of the merchandise, pursuant to section 773(a)(4)(C) of the Act.

Cost-of-Production Analysis

Petitioners alleged, on July 23, 1996 with respect to the 93/94 POR, that Hylsa sold circular welded non-alloy steel pipes and tubes in the home market at prices below COP. Based on this allegation, in accordance with Section 773(b) of the Act, the Department determined, on September 30, 1996, that it had reasonable grounds to believe or suspect that Hylsa had sold the subject merchandise in the home market at prices below its COP. *See* Letter to Shearman and Sterling and Decision Memorandum (September 30, 1996). We therefore initiated a cost investigation with regard to Hylsa for the 93/94 POR in order to determine whether the respondent made home-market sales during the 93/94 POR at prices below its COP within the meaning of section 773(b) of the Act.

In accordance with 19 CFR 353.51(c), we calculated COP for Hylsa as the sum of reported materials, labor, factory overhead, and general expenses. We compared COP to home market prices, net of price adjustments, discounts, and movement expenses.

In accordance with section 773(b) of the Act, in determining whether to disregard home market sales made at prices below the COP, we examined whether such sales were made in substantial quantities over an extended period of time, and whether such sales were made at prices which permitted recovery of all costs within a reasonable period of time in the normal course of trade.

In accordance with our normal practice, for each model for which less than 10 percent, by quantity, of the home market sales during the POR were made at prices below COP, we included all sales of that model in the computation of FMV. For each model for which 10 percent or more, but less than 90 percent, of the home market sales during the POR were priced below COP, we excluded those sales priced below COP, provided that they were made over an extended period of time. For each model for which 90 percent or more of the home market sales during the POR were priced below COP and were made over an extended period of time, we disregarded all sales of that model in our calculation and, in accordance with section 773(b) of the Tariff Act, we used the constructed value (CV) of those models, as described below. *See, e.g., Mechanical Transfer Presses From Japan, Final Results of Antidumping Duty Administrative Review,* 59 FR 9958 (March 2, 1994).

In accordance with section 773(b)(1) of the Act, to determine whether sales below cost had been made over an extended period of time, we compared the number of months in which sales below cost occurred for a particular model to the number of months in which that model was sold. If the model was sold in fewer than three months, we did not disregard below-cost sales unless there were below-cost sales of that model in each month. If a model was sold in three or more months, we did not disregard below-cost sales unless there were sales below cost in at least three of the months. *See Tapered Roller Bearings and Parts Thereof, Finished and Unfinished, From Japan and Tapered Roller Bearings, Four Inches or Less in Outside Diameter, and Components Thereof, From Japan; Final Results of Antidumping Duty Administrative Reviews,* 58 FR 64720, 64729 (December 8, 1993).

Because Hylsa provided no indication that its below-cost sales of models within the ''greater than 90 percent'' and the ''between 10 and 90 percent'' categories were at prices that would permit recovery of all costs within a reasonable period of time and in the normal course of trade, we disregarded those sales of models within the ''10 to 90 percent'' category which were made below cost over an extended period of time. In addition, as a result of our COP test for home market sales of models within the ''greater than 90 percent'' category, we based FMV on CV for all U.S. sales for which more than 90 percent of sales of the comparison home market model occurred below COP. Finally, where we found, for certain of Hylsa's models, home market sales for which less than 10 percent were made below COP, we used all home market sales of these models in our comparisons.

We also used CV as FMV for those U.S. sales for which there was no sale of such or similar merchandise in the home market. We calculated CV in accordance with section 773(e) of the Act. We included the cost of materials, labor, and factory overhead in our calculations. Where the general expenses were less than the statutory minimum of 10 percent of the cost of manufacture (COM), we calculated general expenses as 10 percent of the COM. Where the actual profits were less than the statutory minimum of 8 percent of the COM plus general expenses, we calculated profit as 8 percent of the sum of COM plus general expenses. Based on our verification of Hylsa's cost response, we adjusted Hylsa's reported COP and CV as described below.

Contrary to specific written instructions from the Department, we found that Hylsa failed to report weighted-average costs by product for the entire POR. Instead, Hylsa reported six months of costs by product which were not weight-averaged. As best information available, we made the following changes. Since respondent did not provide twelve months of

weighted-average cost data, we used as best information available the highest monthly cost by product as the actual cost for the POR. We segregated home-market sales by finish into galvanized and non-galvanized products. As best information available, we took the highest product cost in each of these two groups and applied it to all products within the specific groups.

In accordance with section 773 of the Act, for those U.S. models for which we were able to find a home market such or similar match that had sufficient above-cost sales, we calculated FMV based on the packed, F.O.B., ex-factory, or delivered prices to unrelated purchasers in the home market. We made adjustments, where applicable, for post-sale inland freight and for home market direct expenses. We also adjusted FMV for differences in circumstances of sale based on direct selling expenses.

Reimbursement

Petitioners requested that the Department examine the issue of reimbursement where the producer/exporter is the importer of record. Section 353.26 of the Department's regulations states that ''[i]n calculating the United States price, the Secretary will deduct the amount of any antidumping duty which the producer or reseller: (i) [P]aid directly on behalf of the importer; or (ii) [r]eimbursed to the importer.'' 19 CFR 353.26(a)(1). The Department's interpretation of the regulation is that it anticipates that separate corporate entities must exist as producer/reseller and importer in order to invoke the regulation. In the present case, the U.S. importer of record, Hylsa, is also the same corporate entity that produces and exports the subject merchandise. In such a case, there is no separate company or separate U.S. subsidiary, wholly owned or otherwise, that acts as the importer of record. Rather, the importer and exporter are one and the same corporate entity. In this case, there can be no payment made to, or on behalf of, the importer within the meaning of the regulation. Accordingly, the Department interprets its reimbursement regulation as inapplicable in this case.

Preliminary Results of Review

As a result of our comparison of USP to FMV we preliminarily determine that the following margin exists:

CIRCULAR WELDED NON-ALLOY STEEL PIPES AND TUBES

Producer/manufacturer/exporter	Weighted—average margin (percent)
Hylsa 92/93	32.62
Hylsa 93/94	27.66

Interested parties may request disclosure within 5 days of the date of publication of this notice and may request a hearing within 10 days of publication. Any hearing, if requested, will be held 44 days after the date of publication or the first business day thereafter. Case briefs and/or written comments from interested parties may be submitted no later than 30 days after the date of publication. Rebuttal briefs and rebuttals to written comments, limited to issues raised in those comments, may be filed not later than 37 days after the date of publication of this notice. The Department will publish the final results of these administrative reviews including the results of its analysis of issues raised in any such written comments or at a hearing.

The Department shall determine, and the Customs Service shall assess, antidumping duties on all appropriate entries. Individual differences between the USP and FMV may vary from the percentages stated above.

Furthermore, the following deposit requirements will be effective for all shipments of the subject merchandise entered, or withdrawn from warehouse, for consumption on or after the publication date of the final results of this administrative review, as provided for by section 751(a)(1) of the Act:

(1) The cash deposit rate for the reviewed company will be the rate established in the final results of the 93/94 review; (2) for previously reviewed or investigated companies not listed above, the cash deposit rate will continue to be the company-specific rate published for the most recent period; (3) if the exporter is not a firm covered in this review, or the original LTFV investigation, but the manufacturer is, the cash deposit rate will be the rate established for the most recent period for the manufacturer of the merchandise; and (4) if neither the exporter nor the manufacturer is a firm covered in this review, the cash deposit rate will be 32.62 percent. This is the ''all others'' rate from the LTFV investigation. *See Final Determination of Sales at Less Than Fair Value: Circular Welded Non-Alloy Steel Pipe From Mexico,* 57 FR 42953 (September 17, 1992).

This notice also serves as a preliminary reminder to importers of their responsibility under 19 CFR 353.26 to file a certificate regarding the reimbursement of antidumping duties prior to liquidation of the relevant entries during this review period. Failure to comply with this requirement could result in the Department's presumption that reimbursement of antidumping duties occurred and the subsequent assessment of double antidumping duties.

This administrative review and this notice are in accordance with section 751(a)(1) of the Act (19 U.S.C. 1675(a)(1)) and 19 CFR 353.22.

Dated: June 15, 1999.

Robert S. LaRussa,

Assistant Secretary for Import Administration.

[FR Doc. 99–16244 Filed 6–24–99; 8:45 am]

BILLING CODE 3510–DS–P

DEPARTMENT OF COMMERCE

International Trade Administration

[A–357–811, A–351–830, A–570–854, A–560–807, A–588–849, A–821–810, A–859–801, A–791–807, A–583–834, A–549–814, A–489–808, A–307–815]

Initiation of Antidumping Duty Investigations: Certain Cold-Rolled Flat-Rolled Carbon-Quality Steel Products From Argentina, Brazil, the People's Republic of China, Indonesia, Japan, the Russian Federation, Slovakia, South Africa, Taiwan, Thailand, Turkey, and Venezuela

AGENCY: Import Administration, International Trade Administration, Department of Commerce.

EFFECTIVE DATE: June 25, 1999.

FOR FURTHER INFORMATION CONTACT: Rick Johnson (Russian Federation, South Africa) at (202) 482–3818; Jim Doyle (People's Republic of China) at (202) 482–0159; John Kugelman (Turkey) at (202) 482–0649; Linda Ludwig (Brazil, Venezuela), at (202) 482–3833; and Steven Presing or Kris Campbell (Argentina, Indonesia, Japan, Thailand, Taiwan, Slovakia) at (202) 482–0194 and (202) 482–3813, respectively; Import Administration, International Trade Administration, U.S. Department of Commerce, 14th Street and Constitution Avenue, N.W., Washington, D.C. 20230.

Initiation of Investigations

The Applicable Statute and Regulations

Unless otherwise indicated, all citations to the statute are references to the provisions effective January 1, 1995,

the effective date of the amendments made to the Tariff Act of 1930 (''the Act'') by the Uruguay Round Agreements Act (''URAA''). In addition, unless otherwise indicated, all citations to the Department's regulations are references to the provisions codified at 19 CFR Part 351 (1998).

The Petitions

On June 2, 1999, the Department of Commerce (''the Department'') received petitions filed in proper form by Bethlehem Steel Corporation, Gulf States Steel, Ispat Inland Steel, LTV Steel Company Inc., National Steel Corporation,[1] Steel Dynamics, U.S. Steel Group (a unit of USX Corporation), Weirton Steel Corporation, and United Steelworkers of America (collectively ''petitioners''). On June 8, 1999, the Independent Steelworkers Union joined as a co-petitioner. The Department received supplemental information to the petitions since June 2, 1999.

In accordance with section 732(b) of the Act, petitioners allege that imports of certain cold-rolled flat-rolled carbon-quality steel products (''cold-rolled steel'') from Argentina, Brazil, the People's Republic of China (''China''), Indonesia, Japan, the Russian Federation (''Russia''), Slovakia, South Africa, Taiwan, Thailand, Turkey, and Venezuela are being, or are likely to be, sold in the United States at less than fair value within the meaning of section 731 of the Act, and that such imports are materially injuring an industry in the United States.

The Department finds that petitioners filed these petitions on behalf of the domestic industry because they are interested parties as defined in sections 771(9)(C) and (D) of the Act and they have demonstrated sufficient industry support with respect to each of the antidumping investigations they are requesting the Department to initiate (*see Determination of Industry Support for the Petitions below*).

Scope of Investigations

For purposes of these investigations, the products covered are certain cold-rolled (cold-reduced) flat-rolled carbon-quality steel products, neither clad, plated, nor coated with metal, but whether or not annealed, painted, varnished, or coated with plastics or other non-metallic substances, both in coils, 0.5 inch wide or wider, (whether or not in successively superimposed layers and/or otherwise coiled, such as spirally oscillated coils), and also in straight lengths, which, if less than 4.75 mm in thickness having a width that is 0.5 inch or greater and that measures at least 10 times the thickness; or, if of a thickness of 4.75 mm or more, having a width exceeding 150 mm and measuring at least twice the thickness. The products described above may be rectangular, square, circular or other shape and include products of either rectangular or non-rectangular cross-section where such cross-section is achieved subsequent to the rolling process (i.e., products which have been ''worked after rolling'')—for example, products which have been beveled or rounded at the edges.

Specifically included in this scope are vacuum degassed, fully stabilized (commonly referred to as interstitial-free (''IF'')) steels, high strength low alloy (''HSLA'') steels, and motor lamination steels. IF steels are recognized as low carbon steels with micro-alloying levels of elements such as titanium and/or niobium added to stabilize carbon and nitrogen elements. HSLA steels are recognized as steels with micro-alloying levels of elements such as chromium, copper, niobium, titanium, vanadium, and molybdenum. Motor lamination steels contain micro-alloying levels of elements such as silicon and aluminum.

Steel products included in the scope of these investigations, regardless of definitions in the Harmonized Tariff Schedules of the United States (''HTSUS''), are products in which: (1) Iron predominates, by weight, over each of the other contained elements; (2) the carbon content is 2 percent or less, by weight, and; (3) none of the elements listed below exceeds the quantity, by weight, respectively indicated:

1.80 percent of manganese, or
2.25 percent of silicon, or
1.00 percent of copper, or
0.50 percent of aluminum, or
1.25 percent of chromium, or
0.30 percent of cobalt, or
0.40 percent of lead, or
1.25 percent of nickel, or
0.30 percent of tungsten, or
0.10 percent of molybdenum, or
0.10 percent of niobium (also called columbium), or
0.15 percent of vanadium, or
0.15 percent of zirconium.

All products that meet the written physical description, and in which the chemistry quantities do not exceed any one of the noted element levels listed above, are within the scope of these investigations unless specifically excluded. The following products, by way of example, are outside and/or specifically excluded from the scope of these investigations:

- SAE grades (formerly also called AISI grades) above 2300;
- Ball bearing steels, as defined in the HTSUS;
- Tool steels, as defined in the HTSUS;
- Silico-manganese steel, as defined in the HTSUS;
- Silicon-electrical steels, as defined in the HTSUS, that are grain-oriented;
- Silicon-electrical steels, as defined in the HTSUS, that are not grain-oriented and that have a silicon level exceeding 2.25 percent;
- All products (proprietary or otherwise) based on an alloy ASTM specification (sample specifications: ASTM A506, A507).

The merchandise subject to these investigations is typically classified in the HTSUS at subheadings: 7209.15.0000, 7209.16.0030, 7209.16.0060, 7209.16.0090, 7209.17.0030, 7209.17.0060, 7209.17.0090, 7209.18.1530, 7209.18.1560, 7209.18.2510, 7209.18.2550, 7209.18.6000, 7209.25.0000, 7209.26.0000, 7209.27.0000, 7209.28.0000, 7209.90.0000, 7210.70.3000, 7210.90.9000, 7211.23.1500, 7211.23.2000, 7211.23.3000, 7211.23.4500, 7211.23.6030, 7211.23.6060, 7211.23.6075, 7211.23.6085, 7211.29.2030, 7211.29.2090, 7211.29.4500, 7211.29.6030, 7211.29.6080, 7211.90.0000, 7212.40.1000, 7212.40.5000, 7212.50.0000, 7225.19.0000, 7225.50.6000, 7225.50.7000, 7225.50.8010, 7225.50.8015, 7225.50.8085, 7225.99.0090, 7226.19.1000, 7226.19.9000, 7226.92.5000, 7226.92.7050, 7226.92.8050, and 7226.99.0000.

Although the HTSUS subheadings are provided for convenience and U.S. Customs Service (''U.S. Customs'') purposes, the written description of the merchandise under investigation is dispositive.

During our review of the petition, we discussed the scope with the petitioners to ensure that the scope in the petition accurately reflects the product for which the domestic industry is seeking relief. Moreover, as discussed in the preamble to the Department's regulations (62 FR 27323), we are setting aside a period for parties to raise issues regarding product coverage. In particular, we seek comments on the specific levels of alloying elements set out in the description above, the clarity of grades and specifications excluded by example from the scope, and the physical and chemical description of the product coverage. The Department encourages all parties to submit such comments by July 12, 1999. Comments should be

[1] National Steel is not a petitioner in the Japan case.

addressed to Import Administration's Central Records Unit at Room 1870, U.S. Department of Commerce, 14th Street and Constitution Avenue, N.W., Washington, D.C. 20230. The period of scope consultations is intended to provide the Department with ample opportunity to consider all comments and consult with parties prior to the issuance of the preliminary determination.

Determination of Industry Support for the Petitions

Section 732(b)(1) of the Act requires that a petition be filed on behalf of the domestic industry. Section 732(c)(4)(A) of the Act provides that a petition meets this requirement if the domestic producers or workers who support the petition account for: (1) At least 25 percent of the total production of the domestic like product; and (2) more than 50 percent of the production of the domestic like product produced by that portion of the industry expressing support for, or opposition to, the petition.

Section 771(4)(A) of the Act defines the ''industry'' as the producers of a domestic like product. Thus, to determine whether the petition has the requisite industry support, the statute directs the Department to look to producers and workers who produce the domestic like product. The International Trade Commission (''ITC''), which is responsible for determining whether ''the domestic industry'' has been injured, must also determine what constitutes a domestic like product in order to define the industry. While both the Department and the ITC must apply the same statutory definition regarding the domestic like product (section 771(10) of the Act), they do so for different purposes and pursuant to separate and distinct authority. In addition, the Department's determination is subject to limitations of time and information. Although this may result in different definitions of the like product, such differences do not render the decision of either agency contrary to the law.[2]

Section 771(10) of the Act defines the domestic like product as ''a product that is like, or in the absence of like, most similar in characteristics and uses with, the article subject to an investigation under this title.'' Thus, the reference point from which the domestic like product analysis begins is ''the article subject to an investigation,'' *i.e.*, the class or kind of merchandise to be investigated, which normally will be the scope as defined in the petition.

The domestic like product referred to in the petitions is the single domestic like product defined in the ''Scope of Investigation'' section, above. The Department has no basis on the record to find the petitioners' definition of the domestic like product to be inaccurate. The Department, therefore, has adopted the domestic like product definition set forth in the petitions.

Moreover, the Department has determined that the petitions (and subsequent amendments) and supplemental information obtained through the Department's research contain adequate evidence of industry support; therefore, polling is unnecessary (*see Attachment to the Initiation Checklist, Re: Industry Support*, June 21, 1999). For Argentina, Brazil, China, Indonesia, Japan, Russia, Slovakia, South Africa, Taiwan, Thailand, Turkey, and Venezuela, petitioners established industry support representing over 50 percent of total production of the domestic like product. Accordingly, the Department determines that these petitions are filed on behalf of the domestic industry within the meaning of section 732(b)(1) of the Act.

Export Price and Normal Value

The following are descriptions of the allegations of sales at less than fair value upon which our decision to initiate these investigations is based. Petitioners, in determining normal value (''NV'') for Argentina, Brazil, Indonesia, Japan, South Africa, Taiwan, Thailand, Turkey, and Venezuela, relied upon price data contained in confidential market research reports filed with the Department. At the Department's request, petitioners arranged for the Department to contact the authors of the reports to verify the accuracy of the data, the methodology used to collect the data, and the credentials of those gathering the market research. The Department's discussions with the authors of the market research reports are summarized in *Memorandum to the File: Re—Foreign Market Research Reports*, dated June 21, 1999. For a more detailed discussion of the deductions and adjustments relating to home market price, U.S. price and factors of production and sources of data for each country named in the petition, *see Initiation Checklist*, dated June 21, 1999. Should the need arise to use as facts available under section 776 of the Act any of this information in our preliminary or final determinations, we may re-examine the information and revise the margin calculations, if appropriate.

Argentina

Petitioners identified Siderar Limited (''Siderar'') as the only producer and exporter of cold-rolled steel from Argentina. Petitioners based export price (''EP'') on a written price quote from a trading company not affiliated with Siderar. While the quote contains various products, petitioners chose one example, which falls within the HTSUS number (7209.16.00.90) that accounts for 66.57 percent of total imports of cold-rolled steel from Argentina during the period March 1998 through February 1999. Because the terms of the U.S. sale included delivery to the United States, petitioners calculated a net U.S. price by subtracting estimated costs for international freight, barge freight, and unloading and wharfage. In addition, petitioners subtracted a U.S. trading company mark-up, based on an industry expert's affidavit, and the U.S. customs duty.

With respect to normal value (''NV''), petitioners obtained gross unit prices, contemporaneous with the pricing information used as the basis for EP, for the products offered for sale to customers in Argentina that are either identical or similar to those sold to the United States. The prices used in the calculation of NV were ex-factory prices. Therefore, no adjustments for movement were required. The only deduction made to the starting price was for credit expense.

The estimated dumping margin in the petition, based on a comparison between Siderar's U.S. prices and NV, is 24.53 percent.

Brazil

Petitioners identified six Brazilian producers and exporters of cold-rolled steel. Based on their information, petitioners concluded that Companhia Siderurgica Nacional (''CSN''), Usinas Siderurgicas de Minal Gerais (''USIMINAS''), and Companhia Siderurgica Paulista (''COSIPA'') are the principal Brazilian producers of subject merchandise.[3]

Petitioners based EP on two separate methods for both CSN and USIMINAS/COSIPA. First, export price was determined based on the import average unit value (''AUV'') for the three ten-

[2] *See Algoma Steel Corp. Ltd.*, v. *United States*, 688 F. Supp. 639, 642–44 (CIT 1988); *High Information Content Flat Panel Displays and Display Glass from Japan: Final Determination; Rescission of Investigation and Partial Dismissal of Petition*, 56 FR 32376, 32380–81 (July 16, 1991).

[3] The Department recently concluded that USIMINAS and COSIPA are affiliated and that those producers should be collapsed (*see Notice of Preliminary Determination of Sales at Less Than Fair Value: Hot-Rolled Flat-Rolled Carbon-Quality Steel Products from Brazil*, 64 FR 8299, February 19, 1999).

digit categories of the HTSUS accounting for 90 percent of in-scope imports from Brazil during the fourth quarter of 1998. Petitioners presumed that the customs values used to calculate the AUV for each HTSUS category reflect the actual ''transaction value'' of the merchandise being shipped by Brazilian mills. Second, export price was determined based on Brazilian producers' offers for sale of cold-rolled steel in the United States. Petitioners obtained this information from industry sources in the United States. Petitioners made deductions from each quoted offer price for movement-related charges and expenses, particularly international freight, international insurance, and U.S. import duties, based on 1998 U.S. import statistics and the 1998 HTSUS schedule. No adjustments were made for discounts, rebates, credit terms, warranties, foreign inland freight, foreign brokerage and handling or U.S. brokerage and handling, as there was insufficient information available.

With respect to NV, petitioners used market research to determine a gross unit price for sales in December 1998/January 1999 to customers in Brazil of products that are either identical or similar to those sold in the United States. The home market price employed was the average of the range of Brazilian transaction prices reported by petitioners' market research report.

Petitioners provided information demonstrating reasonable grounds to believe or suspect that all of the home market sales of cold-rolled steel provided in the petition were made at prices below the cost of production (''COP''), within the meaning of section 773(b) of the Act, and requested that the Department conduct a country-wide sales below cost investigation. Pursuant to section 773(b)(3) of the Act, COP consists of the cost of manufacturing (''COM''), selling, general, and administrative expenses (''SG&A'') expenses. To calculate COP, petitioners relied on their own production experience, adjusted for known differences between costs incurred to produce the merchandise in the United States and in the foreign market. Based upon the comparison of the adjusted prices of the foreign like product in the home market to the calculated COP of the product, we find reasonable grounds to believe or suspect that sales of the foreign like product were made below the COP within the meaning of section 773(b)(2)(A)(i) of the Act. Accordingly, the Department is initiating a country-wide cost investigation.

Based on our analysis, all of the home market sales reported in the petition were shown to be made at prices below the cost of production. Therefore, petitioners based NV on the constructed value (''CV'') of the merchandise, pursuant to sections 773(a)(4) and 773(e) of the Act. Petitioners compared U.S. sales to the fully-absorbed cost of production for the product, calculated using petitioners' manufacturing costs, adjusted for known cost differences between the United States and Brazil, and non-manufacturing expenses obtained from Brazilian producers' financial statements. Pursuant to section 773(e) of the Act, CV consists of the COM, SG&A, and profit of the merchandise. To calculate COM and SG&A, petitioners followed the same methodology used to determine COP. Accordingly, we relied on this methodology after adjusting certain cost elements as noted above. Petitioners derived profit based on amounts reported in CSN's, USIMINAS' and COSIPA's 1997 financial statements.

Based on comparisons of import AUV to adjusted CV, estimated margins range from 37.53 to 63.32 percent. Based on comparisons of price quotes to adjusted CV, estimated margins range from 31.48 to 56.66 percent.

China

Petitioners identified Baoshan Iron & Steel Corporation (''Bao Steel'') as a possible exporter of cold-rolled steel from China, and stated that Bao Steel is believed to be responsible for the majority (65.3 percent) of Chinese exports during the period.

Petitioners based EP on two models derived from a sales quote for subject merchandise from Bao Steel. However, because this sales quote was not within the anticipated period of investigation, the Department has not considered this quote for the purposes of initiation. Nevertheless, on June 11, 1999, petitioners submitted a calculation of U.S. price based on average unit values based on U.S. import statistics. Petitioners utilized import data from October 1, 1998 through March 31, 1999, using HTSUS numbers 7209.16.00.90 and 7209.17.00.90. The AUVs were calculated by dividing the free along side values by net tons. Petitioners made no deductions from these calculated AUVs.

Petitioners asserted that China is an NME country to the extent that sales or offers for sale of such or similar merchandise in China or to third countries do not permit calculation of normal value under 19 CFR 351.404. Petitioners, therefore, constructed a normal value based on the factors of production methodology pursuant to section 773(c) of the Act. In previous investigations, the Department has determined that China is an NME. *See, e.g., Heavy Forged Hand Tools, Finished or Unfinished, With or Without Handles, From the People's Republic of China,* 64 FR 5770, 5773 (Feb. 5, 1999). In accordance with section 771(18)(C)(i) of the Act, the presumption of NME status remains in effect until revoked by the Department. The presumption of NME status for China has not been revoked by the Department and, therefore, remains in effect for purposes of the initiation of this investigation. Accordingly, the normal value of the product is based on factors of production valued in a surrogate market economy country in accordance with section 773(c) of the Act. In the course of this investigation, all parties will have the opportunity to provide relevant information related to the issues of China's NME status and the granting of separate rates to individual exporters. *See, e.g., Final Determination of Sales at Less Than Fair Value: Silicon Carbide from the PRC,* 59 FR 22585 (May 2, 1994).

For the normal value calculation, petitioners based the factors of production, as defined by section 773(c)(3) of the Act (raw materials, labor, and energy), for cold-rolled steel on the quantities of inputs used by petitioners. Petitioners asserted that detailed information is not available regarding the quantities of inputs used by cold-rolled producers in China. Thus, they have assumed, for purposes of the petition, that the main producer in China (Bao Steel) uses the same inputs in the same quantities as petitioners. Petitioners have used one U.S. producer's factors of production through the hot-rolled production stage, and another U.S. producer's factors of production for the additional processing stages necessary to produce cold-rolled steel. Petitioners argued that the use of petitioners' factors is conservative because the U.S. steel industry is more efficient than the Russian steel industry. Based on the information provided by petitioners, we believe that petitioners' use of their own adjusted factors of production represents information reasonably available to petitioners and is appropriate for purposes of initiation of this investigation.

Petitioners selected India as the appropriate surrogate country. Petitioners stated that every antidumping determination published by the Department within the last twelve months involving Chinese products has utilized India as the surrogate country. Petitioners further cite to *Certain Preserved Mushrooms from the PRC,* 63 FR 72255 (December 31, 1998), where the Department

determined that India is at a comparable level of development with China. Petitioners maintain that India is the most suitable surrogate among the potential surrogates, because: (1) It is at a comparable stage of economic development; (2) of the five most suitable countries, India is the largest producer of comparable merchandise; and (3) because information regarding unit factor costs in India is readily available. Based on the information provided by petitioners and Department practice, we believe that petitioners' use of India as a surrogate country is appropriate for purposes of initiation of this investigation.

In accordance with section 773(c)(4) of the Act, petitioners valued factors of production, where possible, on reasonably available, public surrogate country data. Materials were valued based on India's import values, as published in the *Monthly Statistics of the Foreign Trade of India.* Labor was valued using the regression-based wage rate for the PRC, in accordance with 19 CFR 351.408(c)(3). Electricity was valued using the rate for India published in *Performance Review Iron & Steel.* Natural gas was valued using natural gas prices in India.

For depreciation, overhead, SG&A, financial expenses and profit, petitioners applied rates derived from the financial statements of an Indian producer of subject merchandise, Steel Authority of India Limited (''SAIL''), and have applied these ratios to the COM derived for Bao Steel. Based on the information provided by petitioners, we believe that their surrogate values represent information reasonably available to petitioners and are acceptable for purposes of initiation of this investigation.

Based on comparisons of EP to NV, calculated in accordance with section 773(c) of the Act, the calculated dumping margins for cold-rolled steel from China range from 21.33 to 23.72 percent.

Indonesia

Petitioners identified PT Krakatau Steel (''Krakatau'') as the primary producer and exporter of cold-rolled steel from Indonesia, accounting for virtually all exports to the United States between March 1998 and February 1999. Petitioners based EP for Krakatau on a U.S. price for a sale of one product from a range of products encompassed by an offer from a U.S. trading company to an unaffiliated customer. They chose an offer for a product that falls within HTSUS category 7209.16.00.90 (imports under this category amounted to approximately 62.2 percent of subject imports between March 1998 and February 1999). Because the terms of the offer were delivered to the United States, petitioners calculated a net U.S. price by subtracting estimated costs for shipment from the factory in Indonesia to the port of export, and for brokerage and port charges. In addition, petitioners subtracted a U.S. trading company mark-up, and estimated customs duties and import fees, derived from the 1999 HTSUS schedule.

Petitioners based normal value on gross unit prices, based on foreign market research and contemporaneous with the pricing information used as the basis for EP, for products offered for sale to customers in Indonesia that are either identical or similar to those products sold to the United States. They adjusted these prices by subtracting estimated average delivery costs. In addition, petitioners adjusted normal value for differences in circumstances of sale by subtracting average home market packing expenses and credit expenses, and adding average U.S. packing expenses and credit expenses.

The estimated dumping margin in the petition, based on a comparison of Krakatau's U.S. price and its home market prices, is 43.90 percent.

Japan

Petitioners identified Kawasaki Steel Corporation, Kobe Steel, Ltd., Nippon Steel Corporation, Nisshin Steel Co., Ltd., NKK Corporation, and Sumitomo Metal Industries, Ltd. (''Sumitomo'') as the major producers and exporters of subject merchandise from Japan to the United States. Petitioners based EP for Sumitomo on a November 1998 U.S. price offering for a sale to an unaffiliated purchaser. Petitioners selected two products encompassed in the offer, which fall under HTSUS numbers (7209.16.00.90 and 7209.17.00.90) that represent 62.6 percent of total imports of cold-rolled carbon steel flat products from Japan during the period March 1998 through February 1999. Because the prices stated in the offer are for products delivered to the United States, petitioners calculated a net U.S. price for each product by subtracting estimated costs for shipment from the factory in Japan to the port of export and Japanese trading company mark-ups. In addition, petitioners subtracted unloading and wharfage charges, ocean freight and insurance, and U.S. Customs duties.

With respect to NV, petitioners obtained Sumitomo's prices from foreign market research, contemporaneous with the pricing information used as the basis for EP, for the products offered for sale to customers in Japan which are either identical or similar to those sold to the United States. Petitioners adjusted these prices by subtracting foreign movement charges, packaging expenses, and credit expenses.

In addition, petitioners provided information demonstrating reasonable grounds to believe or suspect that sales of cold-rolled steel in the home market were made at prices below the fully absorbed COP, within the meaning of section 773(b) of the Act, and requested that the Department conduct a country-wide sales-below-cost investigation. Pursuant to section 773(b)(3) of the Act, COP consists of the COM, SG&A and packing. To calculate COP, petitioners based COM on their own production experience, adjusted for known differences between costs incurred to produce cold-rolled steel in the United States and in Japan using publicly available data. To calculate SG&A, including financial expenses, petitioners relied upon the fiscal year 1998 audited financial statements of a Japanese steel producer. Based upon the comparison of the adjusted prices of the foreign like product in the home market to the calculated COP of the product, we find reasonable grounds to believe or suspect that sales of the foreign like product were made below the COP within the meaning of section 773(b)(2)(A)(I) of the Act. Accordingly, the Department is initiating a country-wide cost investigation.

Pursuant to section 773 of the Act, petitioners also based normal value for sales in Japan on CV. Because home market prices are suspected to be below COP, for this initiation, we are accepting CV as the appropriate basis for normal value. Petitioners calculated CV using the same COM and SG&A expense figures used to compute Japanese home market costs. Consistent with section 773(e)(2) of the Act, the petitioners also added to CV an amount for profit. Profit was based upon the aforementioned Japanese producer's fiscal year 1998 financial statements.

The estimated dumping margins in the petition, based on a comparison between Sumitomo's U.S. prices and CV, range from 48.92 to 53.04 percent. The estimated dumping margins, based on a comparison of Sumitomo's U.S. and home market prices, range from 26.60 to 28.57 percent.

Russia

Petitioners identified AmurSteel, Novo Lipetsk Met Kombinat (''Novolipetsk''), Magnitogorskiy Kalibrovochniy Zavod, Magnitogorskiy Metallurgischeskiy Kombinat (''Magnitogorsk''), Mechel,

Novosibprokat Joint-Stock Co., Severstal, St. Petersburg Steel Rolling Mill, and Volgograd Steel Works (''Red October'') as possible exporters of cold-rolled steel from Russia. Petitioners further asserted that two of these producers, Severstal and Magnitogorsk, are the primary producers of subject merchandise in Russia.

Petitioners based EP for these two companies on two methods: (1) Import values declared to U.S. Customs; and (2) an actual U.S. selling price known to petitioners based on a sales offer from a trading company. In calculating import values declared to U.S. Customs, petitioners used the HTSUS categories which petitioners claim to represent the import categories with the largest volumes of imports from Russia, and which contained only subject merchandise (*i.e.*, 7209.16.0060, 7209.17.0060, and 7209.17.0090). Petitioners deducted foreign inland freight from the customs values in order to obtain ex-factory prices. In order to calculate foreign inland freight, petitioners used transportation rates from Poland as they were the most appropriate public figures reasonably available to the petitioners. Petitioners used the Polish rail transport rate because the per-capita GNP of Poland is much closer to Russia's GNP than U.S. GNP, and because the transportation rates for Poland revealed the information needed to permit calculation of a rate in dollars-per-ton. Based on the information presented by petitioners, we believe that the use of Polish rail rates represents information reasonably available to petitioners and is acceptable for purposes of initiation of this investigation.

In order to calculate actual U.S. selling prices known to petitioners, petitioners relied on a single U.S. sales offering to an unaffiliated purchaser in the United States. Petitioners derived a net U.S. price by subtracting amounts attributed to foreign inland freight (*see* paragraph above for a description of the methodology), cost-insurance-freight (''CIF'') charges, and duties, where appropriate.

Petitioners asserted that Russia is an NME country to the extent that sales or offers for sale of such or similar merchandise in Russia or to third countries do not permit calculation of normal value under 19 CFR 351.404. Petitioners, therefore, constructed a normal value based on the factors of production methodology pursuant to section 773(c) of the Act. In previous investigations, the Department has determined that Russia is an NME. *See, e.g., Notice of Preliminary Determination of Sales at Less Than Fair Value: Hot-Rolled Flat-Rolled Carbon-Quality Steel Products From the Russian Federation* (''*Russian Hot-Rolled Steel*''), 64 FR 9312 (February 25, 1999) and *Ferrovanadium and Nitrided Vanadium From the Russian Federation: Notice of Final Results of Antidumping Duty Administrative Review*, 62 FR 65656 (December 15, 1997). In accordance with section 771(18)(C)(i) of the Act, the presumption of NME status remains in effect until revoked by the Department. The presumption of NME status for Russia has not been revoked by the Department and, therefore, remains in effect for purposes of the initiation of this investigation. Accordingly, the normal value of the product is based on factors of production valued in a surrogate market economy country in accordance with section 773(c) of the Act. In the course of this investigation, all parties will have the opportunity to provide relevant information related to the issues of Russia's NME status and the granting of separate rates to individual exporters. *See, e.g., Final Determination of Sales at Less Than Fair Value: Silicon Carbide From the PRC*, 59 FR 22585 (May 2, 1994).

For the normal value calculation, petitioners based the factors of production, as defined by section 773(c)(3) of the Act (raw materials, labor, and energy), for cold-rolled steel on the quantities of inputs used by petitioners. Petitioners asserted that detailed information is not available regarding the quantities of inputs used by cold-rolled steel producers in Russia. Thus, they have assumed, for purposes of the petition, that producers in Russia use the same inputs in the same quantities as petitioners. The only exception to this assumption is that petitioners have also included an ''open hearth cost adjustment'' to account for the relatively poorer efficiency of the open hearth furnaces which are still used to some degree by Russian steel producers. Petitioners have used one U.S. producer's factors of production through the hot-rolling production stage, and another U.S. producer's factors of production for the additional processing stages necessary to produce cold-rolled steel. Petitioners argued that the use of petitioners' factors is conservative because the U.S. steel industry is more efficient than the Russian steel industry. Based on the information provided by petitioners, we believe that petitioners' use of their own adjusted factors of production represents information reasonably available to petitioners and is appropriate for purposes of initiation of this investigation. Petitioners selected Turkey as the primary surrogate market economy country. Petitioners assert that Turkey is the most suitable among the potential surrogates, because: (1) It is at a comparable stage of economic development; (2) the per-capita GNP of Turkey differs only slightly from that of Russia; and (3) Turkey is a significant producer of comparable merchandise (in accordance with section 773(c)(4) of the Act). Based on the information provided by petitioners, we believe that petitioners' use of Turkey as a surrogate country is appropriate for purposes of initiation of this investigation.

In accordance with section 773(c)(4) of the Act, petitioners valued factors of production, where possible, on reasonably available, public surrogate country data. Materials were valued based on Turkish import values reported in U.S. dollars, as published in the 1996 and 1997 United Nations Trade Commodity Statistics (''U.N. Trade Commodity Statistics''), and inflated based on U.S. inflation rates. Labor was valued using the regression-based wage rate for Russia provided by the Department, in accordance with 19 CFR 351.408(c)(3). Electricity and natural gas were valued using the rate for Turkey published in a quarterly report of the OECD's International Energy Agency from the third quarter of 1998.

Petitioners' calculation of scrap recovery costs at different stages of production included an adjustment to the surrogate value which was derived from petitioners' recorded scrap costs. However, given the statutory requirement to value, to the extent possible, all elements of CV using information from a country at a comparable level of economic development, we have rejected petitioners' calculation of NV with respect to scrap. Instead, we have simply applied a scrap value based on the 1997 U.N. Trade Commodity Statistics value for scrap from Turkey. For depreciation, overhead, SG&A, financial expenses, and profit, petitioners applied rates derived from the financial statements of a Turkish producer of subject merchandise, Eregli Demir ve Celik Fabrikalari T.A.S. (''Erdemir''), and have applied these ratios to the COM derived for two Russian producers, Magnitogorsk and Severstal. Based on the information provided by petitioners, we believe that their surrogate values represent information reasonably available to petitioners and are acceptable for purposes of initiation of this investigation.

Based on comparisons of EP to NV, calculated in accordance with section

773(c) of the Act, the calculated dumping margins for cold-rolled steel from Russia range from 56.80 to 73.98 percent.

Slovakia

Petitioners identified VSZ, a.s. (''VSZ'') as the only producer of subject merchandise in Slovakia exporting to the United States. Petitioners based EP on a U.S. price offering for a sale to an unaffiliated purchaser. Petitioners selected two products encompassed in the offer which fall under HTSUS numbers 7209.16.00.90 and 7209.17.00.90. These HTSUS numbers represent 89.5 percent of total imports of cold-rolled carbon steel from Slovakia during the period September 1998 through February 1999. Petitioners calculated net U.S. price by taking gross price to U.S. customers, and then subtracting U.S. trading company mark-ups, unloading and wharfage charges, ocean freight and insurance, based on official U.S. import statistics, estimated costs for U.S. import duties and fees, and estimated costs for shipment from the VSZ factory in Slovakia to the port of export (based on a rate quote in Mexico, the petitioners' preferred surrogate country).

Petitioners noted that the Department has never had occasion to determine whether Slovakia is an NME country to the extent that sales or offers for sale of such or similar merchandise in Slovakia do not permit calculation of NV under 19 CFR 351.404. In previous investigations, however, the Department has determined that Czechoslovakia, the predecessor of both the Czech Republic and Slovakia, was an NME. *See e.g., Final Determination of Sales at Less Than Fair Value: Carbon Steel Wire Rod From Czechoslovakia*, 49 FR 19370 (May 7, 1984). In accordance with section 771(18)(C)(i) of the Act, the presumption of NME status remains in effect until revoked by the Department. The presumption of NME status for Slovakia has not been revoked by the Department and, therefore, remains in effect for purposes of the initiation of this investigation. Accordingly, pursuant to section 773(c) of the Act, petitioners construct NV of the product based on factors of production valued in a surrogate market economy country. In the course of this investigation, all parties will have the opportunity to provide relevant information related to the issues of Slovakia's NME status and the granting of separate rates to individual exporters. *See e.g., Final Determination of Sales at Less Than Fair Value: Silicon Carbide From the PRC*, 59 FR 22585 (May 2, 1994).

Petitioners selected Mexico as the most appropriate surrogate market economy. Petitioners stated that: (1) The per-capita GNP of Mexico is virtually identical to that of Slovakia; (2) the economies of Mexico and Slovakia are similar in terms of GDP composition by sector, and that the two economies had similar rates of GDP growth in 1997 and 1998; and (3) Mexico is a significant producer of the subject merchandise. Petitioners believe Mexico is a suitable surrogate because it is at a comparable level of economic development and is a significant producer of comparable merchandise (in accordance with section 773(c)(4) of the Act). Based on the information provided by petitioners, we believe their use of Mexico as a surrogate country is appropriate for purposes of initiation of this investigation.

For the NV calculation, petitioners based the factors of production, as defined by section 773(c)(3) of the Act (raw materials, labor, and energy), for cold-rolled steel on the quantities of inputs used by the petitioners. Petitioners asserted that detailed information is not available regarding the quantity of inputs used by VSZ. Thus, they have assumed, for purposes of the petition, that VSZ uses the same inputs in the same quantities as petitioners. Specifically, petitioners have used one U.S. producer's factors of production through the hot-rolling production stage, and another U.S. producer's factors of production for the additional processing stages necessary to produce cold-rolled steel. Petitioners contend that the use of petitioners' factors is conservative because the U.S. steel industry is more efficient than the steel industry in Slovakia.

In accordance with section 773(c)(4) of the Act, petitioners valued factors of production, where possible, on reasonably available, public surrogate country data. Materials were valued based on Mexican import statistics as published in the *World Trade Atlas* for the period January 1998 through November 1998 and in the 1996 reports of the United Nations Statistical Division (adjusted for the effects of deflation in the U.S. producer price index). Labor was valued using a regression-based wage rate for Slovakia provided by the Department, in accordance with 19 CFR 351.408(c)(3). Electricity and natural gas were valued using the rates for Mexico published in a quarterly report of the OECD's International Energy Agency. For interest expense, depreciation, SG&A, and profit, petitioners applied rates derived from the 1997 financial statements of AHMSA, a Mexican producer of the subject merchandise. However, claiming that AHMSA's financial statements lacked the specificity necessary to determine an accurate overhead rate, the petitioners calculated an overhead rate using information from the1997 financial statements of Sendzimira, a Polish producer of the subject merchandise. (Poland, like Mexico, is at a level of economic development comparable to that of Slovakia.) The Petitioners applied this ratio to the sum of all discrete material, energy, and labor components included in the cost model. Based on the information provided by the petitioners, we believe that the surrogate values represent information reasonably available to the petitioners and are acceptable for purposes of initiation of this investigation.

Based on comparisons of EP to NV, calculated in accordance with section 773(c) of the Act, the estimated dumping margins for cold-rolled steel from Slovakia range from 61.28 to 63.45 percent.

South Africa

Petitioners identified Iscor Limited (''Iscor'') as a producer and exporter of cold-rolled steel from South Africa. Petitioners based EP for Iscor on a U.S. price offering for the first sale to an unaffiliated purchaser during the period April 1, 1998 through March 31, 1999. According to petitioners, all imports of South African cold-rolled steel since March 1998 were produced by Iscor. The product encompassed in the offer falls under HTS number 7209.17.00.90, which represents 45 percent of total imports of cold-rolled carbon steel flat products from South Africa during the period April 1, 1998 through March 31, 1999. Petitioners calculated a net U.S. price by subtracting ocean freight and insurance, unloading and wharfage charges, and estimated costs for U.S. import duties and fees.

With respect to NV, petitioners obtained home market prices for a product offered for sale in South Africa which is comparable to the product used as the basis for the U.S. price offer. The home market prices were contemporaneous with the U.S. price offer. Petitioners used the simple average of the range of prices to establish a normal value. Petitioners made several adjustments to the home market price including a circumstance of sale adjustment for credit expenses.

The estimated dumping margin in the petition, based on a comparison between Iscor's U.S. price and NV, is 16.65 percent.

Taiwan

Petitioners identified China Steel Corporation (''CSC''), Kao Hsing Chang Iron and Steel Corporation, Ornatube Enterprise Co. Ltd., Sheng Yu Steel Co. Ltd., Yieh Hsing Enterprise Co. Ltd., Yieh Loong Enterprise Co. Ltd., Yieh Phui Enterprise Co. Ltd., and Tung Mung Development Co. as possible exporters of cold-rolled steel from Taiwan. CSC was identified as the major producer of subject merchandise in Taiwan and the principal exporter of subject merchandise to the United States. Petitioners determined EP using two different methods. First, petitioners based EP on the AUV for the three HTSUS categories (7209.16.0090, 7209.17.0090, and 7209.18.6000) that encompass the largest volume of subject merchandise imports from Taiwan during the fourth quarter of 1998. For each of the three HTSUS categories, petitioners relied on official U.S. import statistics to arrive at a calculated import AUV using reported import quantity and value.

Second, petitioners based EP on a U.S. price offering for a sale of subject merchandise to an unaffiliated purchaser in December 1998. To calculate an ex-factory EP for merchandise delivered to the United States, petitioners made deductions from the quoted price for international freight, international insurance, and U.S. import duties based on the CIF charges associated with Taiwanese imports of HTSUS category 7209.16.00.90, the category containing the products covered by the price quote, during 1998.

With respect to NV, petitioners established a home market price by averaging the range of Taiwanese transaction prices, contemporaneous with the pricing information used as the basis for EP. The home market price is ex-factory and, therefore, no adjustments for movement were required.

In addition, petitioners alleged pursuant to section 773(b) of the Act that sales in the home market were made at prices below the fully absorbed COP, and requested that the Department conduct a country-wide sales-below-cost investigation. Petitioners provided information that demonstrated reasonable grounds to believe or suspect that sales of cold-rolled steel in the home market were made at prices below the fully absorbed COP.

Pursuant to section 773(b)(3) of the Act, COP includes COM, SG&A expenses and packing expenses. Petitioners calculated COM based on their own production experience, adjusted for known differences between costs incurred to produce cold-rolled steel in the United States and in Taiwan using publically available data. To calculate fixed overhead and SG&A, including financial expenses, the petitioners relied upon the 1997 audited financial statements of CSC. Based upon the comparison of the adjusted prices of the foreign like product in the home market to the calculated COP of the product, we find reasonable grounds to believe or suspect that sales of the foreign like product were made below the COP within the meaning of section 773(b)(2)(A)(I) of the Act. Accordingly, the Department is initiating a country-wide cost investigation.

In light of the above, for this initiation, we are accepting CV as the appropriate basis for NV. Petitioners calculated CV pursuant to sections 773(a)(4) and 773(e) of the Act. Petitioners calculated CV for Taiwanese producers based on publicly available data and the petitioners' own production experience, adjusted for known differences between costs incurred to produce cold-rolled steel in the United States and in Taiwan. Petitioners calculated CV using the same COM and SG&A expense figures used to compute Taiwanese home market costs. Consistent with section 773(e)(2) of the Act, the petitioners also added to CV an amount for profit. Profit was based upon CSC's 1997 financial statements.

The estimated dumping margins in the petition range from 38.20 to 54.54 percent.

Thailand

Petitioners identified Sahaviriya Steel Industries Public Co. Ltd., The Siam United Steel Co. Ltd., and BHP Steel (Thailand) Ltd. as the primary producers and exporters of cold-rolled steel from Thailand. Petitioners determined EP using two different methods. They first calculated EP based on the AUV for 7209.16.00.90, 7209.17.00.90 and 7209.18.15.30, the three ten-digit categories of the HTSUS accounting for the largest volume of in-scope imports from Thailand during the fourth quarter of 1998. For each of these HTSUS categories, petitioners calculated the AUV using the reported quantity and customs value for imports as recorded in offical U.S. import statistics for the fourth quarter of 1998.

Second, the petitioners determined EP based on offers for sale of cold-rolled steel in the United States. The petitioners obtained this information from industry sources in the United States. The petitioners made deductions for international freight, international insurance, and U.S. import duties based on the CIF charges associated with Thai imports of HTSUS category 7209.16.00.90, the category containing the products covered by the price quotes, derived from official U.S. import statistics for the fourth quarter of 1998.

With respect to NV, petitioners obtained a home market price, contemporaneous with the pricing information used as the basis for EP, for the products offered for sale to customers in Thailand that are either identical or similar to those sold in the United States. This price was based on the average of the range of Thai transaction prices provided in petitioners' market research report for products offered for sale to customers in Thailand that are either identical or similar to those products sold to the United States. The price used by petitioners is ex-factory, exclusive of all taxes. Therefore, no adjustments were required.

In addition, petitioners provided information demonstrating reasonable grounds to believe or suspect that sales of cold-rolled steel in the home market were made at prices below the fully absorbed COP, within the meaning of section 773(b) of the Act, and requested that the Department conduct a country-wide sales-below-cost investigation.

Pursuant to section 773(b)(3) of the Act, COP consists of COM, SG&A and packing expenses. To calculate COP, petitioners based COM on their own production experience, adjusted for known differences between costs incurred to produce cold-rolled carbon steel flat products in the United States and in Thailand using publicly available data. To calculate fixed overhead and SG&A, including financial expenses, petitioners relied upon the 1998 audited financial statements of a Thai steel producer. Based upon the comparison of the adjusted price of the foreign like product in the home market to the calculated COP of the product, we find reasonable grounds to believe or suspect that sales of the foreign like product were made below the COP within the meaning of section 773(b)(2)(A)(i) of the Act. Accordingly, the Department is initiating a country-wide cost investigation.

In light of the above, and pursuant to sections 773(a)(4) and 773(e) of the Act, petitioners based normal value for sales in Thailand on CV. Petitioners calculated CV using the same COM and SG&A expense figures used to compute Thai home market costs. Petitioners added to CV no amount for profit, because the Thai steel producer reported a loss in its 1998 financial statements.

The estimated dumping margins in the petition range from 57.57 percent to 80.67 percent.

Turkey

Petitioners identified two firms, Eregli Demir ve Celik Fabrikalari, TAS (''Erdemir'') and Borusan Birlesik Boru Fabrikalari, AS and Borcelik Celik Sanayii ve Ticaret, AS (''Borusan''), as possible exporters of cold-rolled steel from Turkey. Petitioners further identified Erdemir as the single largest producer, accounting for nearly 80 percent of the production of subject merchandise in Turkey. EP for Erdemir was based on prices at which the merchandise was offered for sale by an unaffiliated trading company in the United States. The product selected for EP falls within HTSUS number 7209.16.0090, which comprised 57.07 percent of all the subject merchandise imported between March 1998 and February 1999. Petitioners calculated the FOB price for this sale by subtracting amounts for U.S. inland freight, international freight, wharfage and handling charges incurred in unloading the merchandise from the vessel to a barge and later unloading the barge onto a flatbed truck. Prices for U.S. inland freight, wharfage and handling charges were obtained from a quote provided by a freight forwarder. Petitioners calculated a weighted-average per-ton amount for international freight by comparing the total CIF value and the total free-along-side (''FAS'') value for the specific HTSUS item covering this merchandise. In addition, petitioners deducted applicable U.S. customs duties. To obtain the price of Erdemir's first sale in the United States to an unaffiliated person, *i.e.*, the trading company, petitioners lowered the offered price from the trading company by three percent to account for the trader's mark-up.

With respect to NV, petitioners obtained gross unit prices, based on foreign market research and contemporaneous with the pricing information used as the basis for EP, for products offered for sale in Turkey which were virtually identical to those upon which EP was based. As the price offers were on ''ex-works'' terms, petitioners made no adjustments to obtain NV, with the exception of circumstance-of-sale (''COS'') adjustments as provided under section 773(a)(6)(C) of the Act. Petitioners adjusted the gross home market price by deducting home market credit expenses and adding U.S. credit expenses.

In addition, petitioners alleged pursuant to section 773(b) of the Act that sales in the home market were made at prices below the fully absorbed COP, and requested that the Department conduct a country-wide sales-below-cost investigation. Pursuant to section 773(b)(3) of the Tariff Act, COP includes the COM, SG&A, and packing expenses. Petitioners calculated COP for Turkish producers based on publicly available data and one petitioning company's own production experience, adjusted for known differences between costs incurred to produce cold-rolled carbon steel flat products in the United States and in Turkey. To calculate unit factor costs for certain materials and SG&A expenses, petitioners relied upon Erdemir's 1997 audited financial statements. Petitioners adjusted all unit factor costs that were denominated in Turkish lira to account for the effects of inflation in Turkey. Based upon the comparison of the adjusted prices of the foreign like product in the home market to the calculated COP of the product, we find reasonable grounds to believe or suspect that sales of the foreign like product were made below the COP within the meaning of section 773(b)(2)(A)(i) of the Act. Accordingly, the Department is initiating a country-wide cost investigation.

In addition to their price-to-price comparison, petitioners provided a CV comparison. Petitioners calculated CV for sales in Turkey pursuant to sections 773(a)(4) and 773(e) of the Act, using the same COM and SG&A expense figures used to compute Turkish home market COP. Consistent with section 773(e)(2) of the Act, petitioners also added to CV an amount for profit, using data drawn from Erdemir's 1997 financial statements.

The estimated dumping margin based on a price-to-price comparison was 13.85 percent. Relying on a price-to-CV comparison, the resulting margin was 32.91 percent.

Venezuela

Petitioners identified Siderurgica del Orinoco CA (''SIDOR'') as a possible exporter of cold-rolled steel from Venezuela. Petitioners further identified this company as the primary producer of the subject merchandise in Venezuela. Petitioners based EP for this company on two methods: (1) Two price quotes dated December 1998 and January 1999 from trading companies for sale to unaffiliated U.S. purchasers; and (2) import values declared to U.S. Customs. Because the terms for the first U.S. sale were delivered to the U.S. customer, petitioners calculated a net U.S. price by subtracting U.S. inland freight. The terms of sale for the second price quote were CIF, duty paid ex-dock. In addition, for both U.S. sales offers, petitioners subtracted ocean freight and insurance and estimated costs for U.S. import duties and fees. In calculating import values declared to U.S. Customs, petitioners used three HTSUS categories which accounted for all imports from Venezuela of the subject merchandise (*i.e.*, 7209.16.00.90, 7209.17.00.90 and 7209.18.15.60).

With respect to NV, petitioners used home market ex-factory prices, contemporaneous with the pricing information used as the basis for EP, for cold-rolled steel in commercial grades in standard. Petitioners provided information in the petition demonstrating reasonable grounds to believe or suspect that sales of cold-rolled steel in the home market were made at prices below the COP, within the meaning of section 773(b) of the Act, and requested that the Department conduct a sales below cost investigation. Because the entire range of home market prices was below the producer's COP, petitioners based NV on CV, pursuant to sections 773(a)(4) and 773(e) of the Act. Pursuant to section 773(e) of the Act, CV consists of the COM, SG&A, and profit. To calculate COM, petitioners relied on one U.S. producer's COM of manufacturing cold-rolled steel during calendar year 1998. The sole exception was for costs associated with the electric arc furnace (''EAF'') production of liquid steel, which were based on the costs of a different U.S. plant because the producer's plant does not have an EAF. Where appropriate, the U.S. producer's costs were adjusted for known differences between manufacturing costs in the United States and Venezuela. Petitioners valued the major inputs in cold-rolled steel production based on the per unit values reported in publications of international agencies. Whenever possible, petitioners used unit factor prices paid by Venezuelan producers during 1998. When these were unavailable, petitioners used the most recent prices available and adjusted them for inflation. The calculated average processing cost was adjusted for unique costs associated with producing different product categories used in the price quotes and average unit values. Petitioners estimated SIDOR's per-unit depreciation expense using the ratio of depreciation expenses to cost of goods sold (''COGS'') minus SIDOR's reported depreciation during 1997, as reported in the audited financial statements for 1997. The calculated ratio was applied to SIDOR's total manufacturing costs minus depreciation to arrive at the estimated depreciation expense. Petitioners multiplied SIDOR's ratio of

SG&A expenses to COGS, as reported in the audited financial statements for 1997, by its estimated COM inclusive of product-specific adjustments, period costs and depreciation to arrive at an estimate of per-unit SG&A expenses. Petitioners did not include financial expenses in COP, as SIDOR reported a net monetary gain in 1997. As SIDOR experienced a loss in 1997, petitioners also did not include any profit in the estimated CV.

Petitioners calculated product-specific CV for matching to U.S. price quotes and average unit import values. The estimated dumping margins based on comparison of CV to U.S. price quotes is 32.23 percent to 52.61 percent. The estimated dumping margins based on comparison of CV to import average unit values is 25.54 percent to 56.72 percent.

Initiation of Cost Investigations

As noted above, pursuant to section 773(b) of the Act, petitioners provided information demonstrating reasonable grounds to believe or suspect that sales in the home markets of Brazil, Japan, Taiwan, Thailand, Turkey and Venezuela were made at prices below the fully allocated COP and, accordingly, requested that the Department conduct a country-wide sales-below-COP investigation in connection with the requested antidumping investigations for these countries. The Statement of Administrative Action (''SAA''), submitted to the U.S. Congress in connection with the interpretation and application of the URAA, states that an allegation of sales below COP need not be specific to individual exporters or producers. SAA, H.R. Doc. No. 316 at 833 (1994). The SAA, at 833, states that ''Commerce will consider allegations of below-cost sales in the aggregate for a foreign country, just as Commerce currently considers allegations of sales at less than fair value on a country-wide basis for purposes of initiating an antidumping investigation.''

Further, the SAA provides that ''new section 773(b)(2)(A) retains the current requirement that Commerce have' reasonable grounds to believe or suspect' that below cost sales have occurred before initiating such an investigation. 'Reasonable grounds' * * * exist when an interested party provides specific factual information on costs and prices, observed or constructed, indicating that sales in the foreign market in question are at below-cost prices.'' *Id*. Based upon the comparison of the adjusted prices from the petition for the representative foreign like products to their costs of production, we find the existence of ''reasonable grounds to believe or suspect'' that sales of these foreign like products in Brazil, Japan, Taiwan, Thailand, Turkey, and Venezuela were made below their respective COPs within the meaning of section 773(b)(2)(A)(i) of the Act. Accordingly, the Department is initiating the requested country-wide cost investigations.

Fair Value Comparisons

Based on the data provided by petitioners, there is reason to believe that imports of cold-rolled steel from Argentina, Brazil, China, Indonesia, Japan, Russia, Slovakia, South Africa, Taiwan, Thailand, Turkey, and Venezuela are being, or are likely to be, sold at less than fair value.

Critical Circumstances

The petitioners have alleged that critical circumstances exist with regard to imports of cold-rolled steel from Brazil, Japan, Thailand and Venezuela, and have supported their allegations with the following information.

First, the petitioners claim that the importers knew, or should have known, that the cold-rolled steel was being sold at less than normal value. Specifically, the petitioners allege that the margins calculated in the petition for each of the four countries exceed the 25 percent threshold used by the Department to impute importer knowledge of dumping.

The petitioners also have alleged that imports from these four countries have been massive over a relatively short period. Alleging that there was sufficient pre-filing notice of these antidumping petitions, the petitioners contend that the Department should compare imports during October-December 1998 to imports during July-September 1998 for purposes of this determination. Specifically, petitioners supported this allegation with copies of news articles discussing the likelihood of filing antidumping complaints against producers of cold-rolled steel. For example, petitioners cite to an international trade publication in September 1998 that carried an article discussing the likelihood that U.S. steel producers would file unfair trade cases related to cold-rolled steel. In addition, petitioners cite to comments made in September 1998 by the Chairman of Bethlehem Steel Corporation, who discussed the rise of cold-rolled steel imports and the possibility that antidumping cases would be filed. The Department concludes that this level of press coverage provided foreign producers of cold-rolled steel with prior knowledge of pending antidumping investigations. Therefore, the Department considered import statistics contained in the petition for the periods October-December 1998 and July-September 1998. Based on this comparison, imports of cold-rolled steel from Brazil increased by 150 percent, imports from Japan increased by 37 percent, while imports from Thailand increased by 114 percent, and imports of cold-rolled steel from Venezuela increased by 44 percent.

Although the ITC has not yet made a preliminary decision with respect to injury, petitioners note that in the past the Department has also considered the extent of the increase in the volume of imports of the subject merchandise as one indicator of whether a reasonable basis exists to impute knowledge that material injury was likely. In the cases involving Brazil, Japan, Thailand, and Venezuela, the increases in imports were more than double the amount considered ''massive.'' Taking into consideration the foregoing, we find that the petitioners have alleged the elements of critical circumstances and supported them with information reasonably available for purposes of initiating a critical circumstances inquiry. For these reasons, we will investigate this matter further and will make a preliminary determination at the appropriate time, in accordance with section 735(e)(1) of the Act and Department practice (*see* Policy Bulletin 98/4 (63 FR 55364, October 15, 1998)).

Allegations and Evidence of Material Injury and Causation

The petitions allege that the U.S. industry producing the domestic like product is being materially injured, and is threatened with material injury, by reason of the individual and cumulated imports of the subject merchandise sold at less than NV. Petitioners explained that the industry's injured condition is evident in the declining trends in net operating profits, net sales volumes, profit to sales ratios, and capacity utilization. The allegations of injury and causation are supported by relevant evidence including U.S. Customs import data, lost sales, and pricing information. The Department assessed the allegations and supporting evidence regarding material injury and causation and determined that these allegations are supported by accurate and adequate evidence and meet the statutory requirements for initiation (*see Attachments to Initiation Checklist, Re: Material Injury, June 21, 1999*).

Initiation of Antidumping Investigations

Based upon our examination of the petitions on cold-rolled steel and petitioners' responses to our supplemental questionnaire clarifying the petitions, as well as our discussions with the authors of the foreign market research reports supporting the petitions on June 16, 1999 and other measures to confirm the information contained in these reports (*see Memorandum to the File; Re: Foreign Market Research,* dated June 21, 1999), we have found that the petitions meet the requirements of section 732 of the Act. Therefore, we are initiating antidumping duty investigations to determine whether imports of certain cold-rolled carbon steel flat products from Argentina, Brazil, China, Indonesia, Japan, Russia, Slovakia, South Africa, Taiwan, Thailand, Turkey, and Venezuela are being, or are likely to be, sold in the United States at less than fair value. Unless this deadline is extended, we will make our preliminary determinations no later than 140 days after the date of this initiation.

Distribution of Copies of the Petitions

In accordance with section 732(b)(3)(A) of the Act, a copy of the public version of each petition has been provided to the representatives of Argentina, Brazil, China, Indonesia, Japan, Russia, Slovakia, South Africa, Taiwan, Thailand, Turkey, and Venezuela. We will attempt to provide a copy of the public version of each petition to each exporter named in the petition, as appropriate.

International Trade Commission Notification

We have notified the ITC of our initiations, as required by section 732(d) of the Act.

Preliminary Determinations by the ITC

The ITC will determine, by no later than July 17, 1999, whether there is a reasonable indication that imports of cold-rolled steel from Argentina, Brazil, China, Indonesia, Japan, Russia, Slovakia, South Africa, Taiwan, Thailand, Turkey, and Venezuela are causing material injury, or threatening to cause material injury, to a U.S. industry. A negative ITC determination for any country will result in the investigation being terminated with respect to that country; otherwise, these investigations will proceed according to statutory and regulatory time limits.

This notice is published pursuant to section 777(i) of the Act.

Dated: June 21, 1999.

Robert S. LaRussa,

Assistant Secretary for Import Administration.

[FR Doc. 99–16243 Filed 6–24–99; 8:45 am]

BILLING CODE 3510–DS–P

DEPARTMENT OF COMMERCE

International Trade Administration

[C–351–831, C–560–808, C–549–815, C–307–816]

Notice of Initiation of Countervailing Duty Investigations: Certain Cold-Rolled Flat-Rolled Carbon-Quality Steel Products From Brazil, Indonesia, Thailand, and Venezuela

AGENCY: Import Administration, International Trade Administration, Department of Commerce

EFFECTIVE DATE: June 25, 1999.

FOR FURTHER INFORMATION CONTACT: Dana Mermelstein or Javier Barrientos (Brazil), at (202) 482–2786; Rosa Jeong (Indonesia), at (202) 482–3853; Eva Temkin (Thailand), at (202) 482–1167; and Dana Mermelstein or Sean Carey (Venezuela), at (202) 482–2786, Import Administration, U.S. Department of Commerce, Room 1870, 14th Street and Constitution Avenue, N.W., Washington, D.C. 20230.

INITIATION OF INVESTIGATIONS:

The Applicable Statute and Regulations

Unless otherwise indicated, all citations to the statute are references to the provisions effective January 1, 1995, the effective date of the amendments made to the Tariff Act of 1930 (the Act) by the Uruguay Round Agreements Act (URAA). In addition, unless otherwise indicated, all citations to the Department's regulations are to the regulations codified at 19 C.F.R. Part 351 (1998) and to the substantive countervailing duty regulations published in the **Federal Register** on November 25, 1998 (63 FR 65348).

The Petitions

On June 2, 1999, the Department of Commerce (the Department) received petitions filed in proper form on behalf of Bethlehem Steel Corporation, Gulf States Steel, Inc., Ispat Inland, Inc., LTV Steel Co., Inc., National Steel Corporation, Steel Dynamics, Inc., U.S. Steel Group, a Unit of USX Corporation, Weirton Steel Corporation, and United Steelworkers of America, (collectively, ''the petitioners''). On June 8, 1999, the Independent Steelworkers Union joined as a co-petitioner. Supplements to the petitions were filed on June 8, 10, 11, 14, and 15, 1999.

In accordance with section 702(b)(1) of the Act, petitioners allege that manufacturers, producers, or exporters of certain cold-rolled flat-rolled carbon-quality steel products (cold-rolled or subject merchandise) in Brazil, Indonesia, Thailand, and Venezuela receive countervailable subsidies within the meaning of section 701 of the Act. Petitioners also allege that ''critical circumstances'' exist within the meaning of section 703(e) of the Act, with respect to imports of subject merchandise from Thailand and Venezuela.

The Department finds that petitioners are interested parties as defined under sections 771(9)(C) and (D) of the Act, and have filed the petitions on behalf of the domestic industry. The petitioners have demonstrated sufficient industry support with respect to each of the countervailing duty investigations, which they are requesting the Department to initiate (*see Determination of Industry Support for the Petitions below*).

Scope of the Investigations

For purposes of these investigations, the products covered are certain cold-rolled (cold-reduced) flat-rolled carbon-quality steel products, neither clad, plated, nor coated with metal, but whether or not annealed, painted, varnished, or coated with plastics or other non-metallic substances, both in coils, 0.5 inch wide or wider, (whether or not in successively superimposed layers and/or otherwise coiled, such as spirally oscillated coils), and also in straight lengths, which, if less than 4.75 mm in thickness having a width that is 0.5 inch or greater and that measures at least 10 times the thickness; or, if of a thickness of 4.75 mm or more, having a width exceeding 150 mm and measuring at least twice the thickness. The products described above may be rectangular, square, circular or other shape and include products of either rectangular or non-rectangular cross-section where such cross-section is achieved subsequent to the rolling process (i.e., products which have been ''worked after rolling'')—for example, products which have been beveled or rounded at the edges.

Specifically included in this scope are vacuum degassed, fully stabilized (commonly referred to as interstitial-free (''IF'')) steels, high strength low alloy (''HSLA'') steels, and motor lamination steels. IF steels are recognized as low carbon steels with micro-alloying levels of elements such as titanium and/or niobium added to stabilize carbon and nitrogen elements. HSLA steels are recognized as steels with micro-alloying

levels of elements such as chromium, copper, niobium, titanium, vanadium, and molybdenum. Motor lamination steels contain micro-alloying levels of elements such as silicon and aluminum.

Steel products included in the scope of these investigations, regardless of definitions in the Harmonized Tariff Schedules of the United States (''HTSUS''), are products in which: (1) iron predominates, by weight, over each of the other contained elements; (2) the carbon content is 2 percent or less, by weight, and; (3) none of the elements listed below exceeds the quantity, by weight, respectively indicated:

1.80 percent of manganese, or
2.25 percent of silicon, or
1.00 percent of copper, or
0.50 percent of aluminum, or
1.25 percent of chromium, or
0.30 percent of cobalt, or
0.40 percent of lead, or
1.25 percent of nickel, or
0.30 percent of tungsten, or
0.10 percent of molybdenum, or
0.10 percent of niobium (also called columbium), or
0.15 percent of vanadium, or
0.15 percent of zirconium

All products that meet the written physical description, and in which the chemistry quantities do not exceed any one of the noted element levels listed above, are within the scope of these investigations unless specifically excluded. The following products, by way of example, are outside and/or specifically excluded from the scope of these investigations:

- SAE grades (formerly also called AISI grades) above 2300;
- Ball bearing steels, as defined in the HTSUS;
- Tool steels, as defined in the HTSUS;
- Silico-manganese steel, as defined in the HTSUS;
- Silicon-electrical steels, as defined in the HTSUS, that are grain-oriented;
- Silicon-electrical steels, as defined in the HTSUS, that are not grain-oriented and that have a silicon level exceeding 2.25 percent;
- All products (proprietary or otherwise) based on an alloy ASTM specification (sample specifications: ASTM A506, A507).

The merchandise subject to these investigations is typically classified in the HTSUS at subheadings: 7209.15.0000, 7209.16.0030, 7209.16.0060, 7209.16.0090, 7209.17.0030, 7209.17.0060, 7209.17.0090, 7209.18.1530, 7209.18.1560, 7209.18.2510, 7209.18.2550, 7209.18.6000. 7209.25.0000, 7209.26.0000, 7209.27.0000, 7209.28.0000, 7209.90.0000, 7210.70.3000, 7210.90.9000, 7211.23.1500, 7211.23.2000, 7211.23.3000, 7211.23.4500, 7211.23.6030, 7211.23.6060, 7211.23.6075, 7211.23.6085, 7211.29.2030, 7211.29.2090, 7211.29.4500, 7211.29.6030, 7211.29.6080, 7211.90.0000, 7212.40.1000, 7212.40.5000, 7212.50.0000, 7225.19.0000, 7225.50.6000, 7225.50.7000, 7225.50.8010, 7225.50.8015, 7225.50.8085, 7225.99.0090, 7226.19.1000, 7226.19.9000, 7226.92.5000, 7226.92.7050, 7226.92.8050, and 7226.99.0000.

Although the HTSUS subheadings are provided for convenience and U.S. Customs Service (''U.S. Customs'') purposes, the written description of the merchandise under investigation is dispositive.

During our review of the petition, we discussed the scope with the petitioners to ensure that the scope in the petition accurately reflects the product for which the domestic industry is seeking relief. Moreover, as discussed in the preamble to the Department's regulations (62 FR 27323), we are setting aside a period for parties to raise issues regarding product coverage. In particular, we seek comments on the specific levels of alloying elements set out in the description above, the clarity of grades and specifications excluded by example from the scope, and the physical and chemical description of the product coverage. The Department encourages all parties to submit such comments by July 7, 1999. Comments should be addressed to Import Administration's Central Records Unit at Room 1870, U.S. Department of Commerce, 14th Street and Constitution Avenue, N.W., Washington, D.C. 20230. The period of scope consultations is intended to provide the Department with ample opportunity to consider all comments and consult with parties prior to the issuance of the preliminary determination.

Consultations

Pursuant to section 702(b)(4)(A)(ii) of the Act, the Department invited representatives of the relevant foreign governments for consultations with respect to the petitions filed. On June 16, 1999, the Department held consultations with representatives of the Royal Thai Government (RTG). Also on June 16, 1999, the Department held consultations with representatives of the Government of Brazil (GOB). On June 18, 1999, the Department held consultations with representatives of the Government of Venezuela (GOV). *See* the June 21, 1999, memoranda to the file regarding these consultations (public documents on file in the Central Records Unit of the Department of Commerce, Room B–099).

Determination of Industry Support for the Petition

Section 732(b)(1) of the Act requires that a petition be filed on behalf of the domestic industry. Section 732(c)(4)(A) of the Act provides that a petition meets this requirement if the domestic producers or workers who support the petition account for: (1) At least 25 percent of the total production of the domestic like product; and (2) more than 50 percent of the production of the domestic like product produced by that portion of the industry expressing support for, or opposition to, the petition.

Section 771(4)(A) of the Act defines the ''industry'' as the producers of a domestic like product. Thus, to determine whether the petition has the requisite industry support, the statute directs the Department to look to producers and workers who produce the domestic like product. The International Trade Commission (''ITC''), which is responsible for determining whether ''the domestic industry'' has been injured, must also determine what constitutes a domestic like product in order to define the industry. While both the Department and the ITC must apply the same statutory definition regarding the domestic like product (section 771(10) of the Act), they do so for different purposes and pursuant to separate and distinct authority. In addition, the Department's determination is subject to limitations of time and information. Although this may result in different definitions of the like product, such differences do not render the decision of either agency contrary to the law.[1]

Section 771(10) of the Act defines the domestic like product as ''a product that is like, or in the absence of like, most similar in characteristics and uses with, the article subject to an investigation under this title.'' Thus, the reference point from which the domestic like product analysis begins is ''the article subject to an investigation,'' *i.e.*, the class or kind of merchandise to be investigated, which normally will be the scope as defined in the petition.

[1] *See Algoma Steel Corp. Ltd.*, v. *United States*, 688 F. Supp. 639, 642–44 (CIT 1988); *High Information Content Flat Panel Displays and Display Glass from Japan: Final Determination; Rescission of Investigation and Partial Dismissal of Petition*, 56 FR 32376, 32380–81 (July 16, 1991).

The domestic like product referred to in the petitions is the single domestic like product defined in the ''Scope of Investigation'' section, above. The Department has no basis on the record to find the petitioners' definition of the domestic like product to be inaccurate. The Department, therefore, has adopted the domestic like product definition set forth in the petitions.

Moreover, the Department has determined that the petitions (and subsequent amendments) and supplemental information obtained through the Department's research, contain adequate evidence of industry support; therefore, polling is unnecessary (*see Attachment to the Initiation Checklist, Re: Industry Support*, June 21, 1999). For all countries, petitioners established industry support representing over 50 percent of total production of the domestic like product. Accordingly, the Department determines that these petitions are filed on behalf of the domestic industry within the meaning of section 732(b)(1) of the Act.

Injury Test

Because Brazil, Indonesia, Thailand, and Venezuela are ''Subsidies Agreement Countries'' within the meaning of section 701(b) of the Act, section 701(a)(2) applies to these investigations. Accordingly, the ITC must determine whether imports of the subject merchandise from these countries materially injure, or threaten material injury to, a U.S. industry.

In our consultations with the Government of Venezuela , the GOV stated that Article 27.10(b) of the SCM Agreement requires that the Department decline to initiate a countervailing duty investigation of certain cold-rolled carbon steel flat products from Venezuela or to terminate any countervailing duty investigation, if initiated. The GOV noted that the volume of imports as described in the petition does not reach the thresholds required by Article 27(10)(b): the volume of imports of the subject merchandise from Venezuela is less than four percent of total U.S. imports of the like product, and, when aggregated with imports from the other developing countries named in the petition whose individual exports constitute less than four percent of total imports (Thailand and Indonesia), less than nine percent of total U.S. imports (by volume) of the like product. Article 27.10(b) is given effect by Section 771(24)(B) of the Act, which directs the International Trade Commission to apply a particular standard to developing countries' imports when considering whether those imports are ''negligible.'' Thus, the applicability of Article 27(10)(b) will be properly considered by the International Trade Commission during its investigation pursuant to section 703(a) of the Act. The ITC is scheduled to make its preliminary determination by July 16, 1999.

Allegations and Evidence of Material Injury and Causation

The petitioners allege that the U.S. industry producing the domestic like product is being materially injured, and is threatened with material injury, by reason of the individual and cumulated subsidized imports of the subject merchandise. The petitioners explained that the industry's injured condition is evident in the declining trends in net operating profits, net sales volumes, profit-to-sales ratios, and industry employment level. The allegations of injury and causation are supported by relevant evidence including business proprietary data from the petitioning firms and U.S. Customs import data. The Department assessed the allegations and supporting evidence regarding material injury and causation, and determined that these allegations are supported by accurate and adequate evidence and meet the statutory requirements for initiation. *See* the June 21, 1999, memoranda to the file (for each country) regarding the initiation of each investigation (public versions on file in the Central Records Unit of the Department of Commerce, Room B–099).

Section 702(b) of the Act requires the Department to initiate a countervailing duty proceeding whenever an interested party files a petition, on behalf of an industry, that (1) alleges the elements necessary for an imposition of a duty under section 701(a), and (2) is accompanied by information reasonably available to petitioners supporting the allegations.

Initiation of Countervailing Duty Investigations

The Department has examined the petitions on certain cold-rolled flat-rolled carbon-quality steel products from Brazil, Indonesia, Thailand, and Venezuela, and found that they comply with the requirements of section 702(b) of the Act. Therefore, in accordance with section 702(b) of the Act, we are initiating countervailing duty investigations to determine whether manufacturers, producers, or exporters of cold-rolled from these countries receive subsidies. *See* the June 21, 1999, memoranda to the file (for each country) regarding the initiation of each investigation (public documents on file in the Central Records Unit of the Department of Commerce, Room B–099). We will also make a determination as to whether critical circumstances exist with respect to the subject merchandise from Thailand and Venezuela no later than the date of our preliminary determination.

A. Brazil

We are including in our investigation the following programs alleged in the petition to have provided countervailable subsidies to producers and exporters of the subject merchandise in Brazil:

1. *GOB Equity Infusions*
   a. *Pre-1992 Equity Infusions*
   b. *GOB Equity Infusions to Companhia Siderurgica Paulista (COSIPA) in 1992 and 1993*
   c. *GOB Equity Infusion to Companhia Siderugica Nacional (CSN) in 1992*
2. *GOB Tax Deferrals*
   a. *COFINS, IPI, Social Contribution, Finsocial, PIS and IRPJ Arrears to the National Tax Authority;*
   b. *INSS and FNDE Arrears to the Federal Social Security Administration;*
   c. *ICMS Arrears to the State of Sao Paulo;*
   d. *IPTU Arrears to the City of Cubatao.*

Based of the information contained in the petition, we are also investigating whether COSIPA was uncreditworthy in the years from 1984 to 1989 and from 1991 to 1993, whether CSN was uncreditworthy in the years from 1984 to 1992, and whether Usinas Siderugicas de Minas Gerais (USIMINAS) was uncreditworthy in the years from 1984 to 1988. Further, we will investigate whether the producers of subject merchandise were unequityworthy to the extent that they received government equity infusions.

B. Indonesia

We are including in our investigation the following programs alleged in the petition to have provided countervailable subsidies to producers and exporters of the subject merchandise in Indonesia:

1. *1995 Equity Infusion to PT Krakatau Steel (Krakatau).*
2. *Pre-1993 Equity Infusions to Krakatau.*
3. *Equity Infusions to PT Cold-Rolled Mill Indonesia (CRMI).*
4. *Two-Step Loan.*
5. *Bank of Indonesia Rediscount Loans.*
6. *Reduction in Electricity Tariffs.*

Based in the information in the petition, we are also investigating whether

Krakatau was uncreditworthy in 1995, whether Krakatau was unequityworthy during the years from 1988 to 1992, and in 1995, and whether CRMI was unequityworthy in 1989 and 1990.

C. Thailand

We are including in our investigation the following programs alleged in the petition to have provided countervailable subsidies to producers and exporters of the subject merchandise in Thailand:

1. *Duty Exemptions on Imports of Raw and Essential Materials Under Section 30 of the Investment Promotion Act (IPA).*
2. *Duty Exemption on Imports of Machinery Under IPA Section 28.*
3. *Exemptions from VAT Under Section 21(4) of the VAT Act.*
4. *Corporate Income Tax Exemptions Under IPA Section 31.*
5. *Tax Benefits from Revaluation.*
6. *Additional Tax Deductions Under IPA Section 35.*
7. *Loan Guarantees on 1996 Loan to Thai Cold-rolled Steel Sheet Plc (TCRSS).*
8. *Subsidy on the 1996 Loan from RTG-Banks and Commercial Thai Banks.*
9. *Loans from the IFCT and the Thai Export-Import Bank.*
10. *Investment Inducements.*
11. *Loans from Banks Owned, Controlled, or Influenced by the RTG.*
12. *Packing Credits.*
13. *Pre-Shipment Finance Facilities.*
14. *Export Insurance Program.*
15. *Trust Receipt Financing for Raw Materials.*
16. *Tax Certificates for Export.*
17. *Import Duty Exemptions for Industrial Estates.*
18. *Export Processing Zone Incentives.*
19. *IPA Subsidies for Building and Operating the Prachuap Port.*
20. *Subsidized Waterworks from Eastern Water.*
21. *Plant Construction Subsidies for Sahaviriya's Power Plant.*

Based on the information in the petition, we are also investigating whether TCRSS was uncreditworthy during the period from 1996 to the POI. Petitioners also alleged that SUS was uncreditworthy and unequityworthy during this period. However, no evidence was provided to substantiate this allegation. Thus, we are not initiating an investigation of these allegations.

We are not including in our investigation the following programs alleged to be benefitting producers and exporters of the subject merchandise in Thailand:

1. Subsidized Transport, Electricity, and Water Charges From the BoI

Petitioners allege that, since 1995, the Board of Investment (BoI) has awarded projects of certain industries customized incentives for investments of particular strategic importance. In particular, petitioners allege that since the BoI has bestowed benefits upon the Thai auto industry, and in light of the BoI's history of promoting the steel industry, the Department should investigate whether the BOI is also offering exclusive transport, electricity, and water discounts to the steel industry. However, petitioners have not provided information showing that the Thai steel industry is eligible for any benefits in this capacity. Therefore, we are not initiating an investigation of this subsidy allegation.

2. Regional Electricity Subsidies From EGAT

The Petitioners assert that the RTG is providing a countervailable subsidy to producers of subject merchandise through the pricing policy of the state-owned electric company. Petitioners argue that because the Thai electric company (EGAT) charges all customers of the same type the same rate for electricity, regardless of where they live or operate, EGAT is subsidizing electricity users (including TCRSS) in regions with much higher operating costs.

We are not initiating an investigation into this subsidy allegation. Petitioners have not provided information to support their allegation that RTG charged TCRSS electricity rates for less than adequate remuneration.

3. Fuel Subsidies for SSI's On-Site Power Plant

Petitioners allege that PTT, Thailand's national oil company, which has a monopoly on petroleum based fuels, normally charges monopoly premiums but charged international market level prices to SSI. Petitioners allege that TCRSS would receive a benefit if it pays for fuel at less than adequate remuneration. Thus, petitioners argue that the Department should investigate whether SSI's Bangsaphan steel complex has its own generation facility, what price that facility pays for fuel, and what amounts TCRSS pays for use of electricity generated from the plant. However, the information in the petition does not support the claim that PTT charges monopoly premiums to all users of petroleum based fuels in Thailand. Because petitioners have failed to substantiate their allegation of discriminatory pricing in favor of TCRSS, we are not initiating an investigation of this subsidy allegation.

D. Venezuela

We are including in our investigation the following programs alleged in the petition to have provided countervailable subsidies to producers and exporters of the subject merchandise in Venezuela:

1. *Government Equity Infusions into Siderúrgica del Orinoco C.A. (SIDOR), Conversion of SIDOR'S Debt to Equity.*
2. *Dividend Advances from Hacienda.*
3. *Debt Assistance as Part of the Privatization of SIDOR.*
4. *GOV Provision of Iron Ore for Less than Adequate Remuneration.*
5. *Export Bond Program.*
6. *FINEXPO.*
7. *Government of Venezuela Port Concession.*
8. *Preferential Tax Incentives under Decree 1477.*
9. *1988 Grant from the National Executive of the Government of Venezuela.*
10. *Discounted Prepayment of SIDOR Debt.*

Based on the information in the petition, we are also investigating whether SIDOR was uncreditworthy during the period from 1979 to 1991, with the exception of 1988, and during the period from 1995 to 1998. Further, we will investigate whether SIDOR was unequityworthy to the extent that it received government equity infusions.

We are not including in our investigation at this time the following program alleged to be benefitting producers and exporters of the subject merchandise in Venezuela:

1. Provision of Electricity, Water, Gas and Other Fuels for Less Than Adequate Remuneration

Petitioners allege that the GOV provides to SIDOR electricity, water, gas, and other fuels, for less than adequate remuneration. Petitioners cite to an August 1997, press report which states ''the contract guarantees the winning consortium the necessary supply of electricity, water, and gas to operate the company.'' Petitioners also cite to the *Final Affirmative Countervailing Duty Determination; Ferrosilicon from Venezuela; and Countervailing Duty Order for Certain Ferrosilicon from Venezuela,* 58 FR 27539 (May 10, 1993) (*Ferrosilicon from Venezuela*), in which the Department found countervailable benefits from the preferential government provision of electricity. Petitioners contest the Department's finding in *Final Affirmative Countervailing Duty Determination; Steel Wire Rod From*

Venezuela, 62 FR 55014 (October 22, 1997) (*Steel Wire Rod*) that electricity was not provided for less than adequate remuneration. Further, in petitioners' view, SIDOR's privatization provides new information which warrants the reexamination of the GOV provision of electricity, and the examination of the GOV provision of water and gas.

Notwithstanding the Department's negative determination with respect to the provision of electricity for less than adequate remuneration in *Steel Wire Rod* (62 FR at 55022), petitioners have failed to provide adequate information that electricity, water and gas are being provided to SIDOR for less than adequate remuneration. We disagree with petitioners that a press report of the GOV's intent to continue providing these utilities to SIDOR after privatization suggests that those utilities are being provided for less than adequate remuneration. Petitioners have not provided any information about pricing policies or cost data that would indicate that the rates that SIDOR pays are not based upon market principles. Neither have petitioners provided any new information which would warrant reexamining our finding in *Steel Wire Rod*. Thus, we are not including this program in our initiation.

2. GOV-Induced Contribution

Petitioners alleged that, as part of the privatization, the Amazonia Consortium was required to invest $300 million in plant modernization, and $74 million in environmental control and clean-up. SIDOR's financial statement indicates that the Consortium committed to make a minimum investment of $300 million within three years. Petitioners alleged that this committed investment constitutes revenue foregone by the GOV in its privatization of SIDOR. Petitioners also contended that in the absence of a GOV-induced equity infusion, the benefit may have taken the form of a direct reimbursement to, or credit against the purchase price.

While petitioners have documented the committed investment element of SIDOR's privatization, a simple assertion that the investment was a condition of SIDOR's sale is insufficient to demonstrate the existence of a direct or indirect financial contribution by the GOV to SIDOR. Thus, we are not investigating the investment commitments which were made as part of the privatization of SIDOR.

3. Grant Given Through the Reduction of Sale Price

Petitioners alleged that SIDOR's purchasers received a discount on the purchase price of SIDOR in return for agreeing to a one-year worker layoff prohibition and a two-year retraining program. Petitioners alleged that this discount constitutes revenue foregone by the GOV in its sale of SIDOR and it confers a benefit which is specific to SIDOR.

While petitioners have documented their allegation that the terms of SIDOR's sale may have included a payment of cash and commitments with respect to employee retention and worker retraining, they have not provided evidence that demonstrates that the terms give rise to a direct or indirect financial contribution by the GOV to SIDOR. Thus, we are not investigating whether the purchase price was discounted in exchange for other commitments by SIDOR's purchasers.

Petitioners have also alleged that SIDOR was uncreditworthy from 1993 to 1998 and unequityworthy from 1996 to 1998. However, petitioners did not provide information to indicate that the company was uncreditworthy or unequityworthy during these years. Thus, we are not investigating these allegations.

Critical Circumstances

The petitioners have alleged that critical circumstances exist with regard to imports of cold-rolled steel from Thailand and Venezuela, and have supported their allegations with the following information.

As discussed above, petitioners have provided documentation supporting allegations of countervailable subsidies which are inconsistent with the Subsidies Agreement, including export subsidies that are similar to those contained in Annex I of the Subsidies Agreement.

The petitioners also have alleged that imports from Thailand and Venezuela have been massive over a relatively short period. Alleging that there was sufficient pre-filing notice of these countervailing duty petitions, the petitioners contend that the Department should compare imports during October-December 1998 to imports during July-September 1998 for purposes of this determination. Specifically, petitioners supported this allegation with copies of news articles discussing the likelihood of filing unfair trade complaints against producers of cold-rolled steel. For example, petitioners cite to an international trade publication in September 1998 that carried an article discussing the likelihood that U.S. steel producers would file unfair trade cases related to cold-rolled steel. In addition, petitioners cite to comments made in September 1998 by the Chairman of Bethlehem Steel Corporation, who discussed the rise of cold-rolled steel imports and the possibility that trade remedy cases would be filed. The Department concludes that this level of press coverage provided foreign producers of cold-rolled steel with prior knowledge of pending unfair trade investigations. Therefore, the Department considered import statistics contained in the petition for the periods October-December 1998 and July-September 1998. Based on this comparison, imports of cold-rolled steel from Thailand increased by 114 percent, and imports of cold-rolled steel from Venezuela increased by 44 percent.

Although the ITC has not yet made a preliminary decision with respect to injury, petitioners note that in the past the Department has also considered the extent of the increase in the volume of imports of the subject merchandise as one indicator of whether a reasonable basis exists to impute knowledge that material injury was likely. In the cases involving Thailand, and Venezuela, the increases in imports were more than double the amount considered ''massive.'' Taking into consideration the foregoing, we find that the petitioners have alleged the elements of critical circumstances and supported them with information reasonably available for purposes of initiating a critical circumstances inquiry. For these reasons, we will investigate this matter further and will make a preliminary determination at the appropriate time, in accordance with section 735(e)(1) of the Act and Department practice (see Policy Bulletin 98/4 (63 FR 55364, October 15, 1998)).

Distribution of Copies of the Petitions

In accordance with section 702(b)(4)(A)(i) of the Act, copies of the public version of the petition have been provided to the governmental representatives of Brazil, Indonesia, Thailand, and Venezuela. We will attempt to provide copies of the public version of the petition to all the exporters named in the petition, as provided for under section 351.203(c)(2) of the Department's regulations.

ITC Notification

Pursuant to section 702(d) of the Act, we have notified the ITC of these initiations.

Preliminary Determination by the ITC

The ITC will determine by July 16, 1999, whether there is a reasonable indication that an industry in the United States is materially injured, or is threatened with material injury, by

reason of imports of certain cold-rolled flat-rolled carbon-quality steel products from Brazil, Indonesia, Thailand, and Venezuela. A negative ITC determination for any country will result in the investigation being terminated with respect to that country; otherwise, the investigations will proceed according to statutory and regulatory time limits.

This notice is published pursuant to section 777(i) of the Act.

Date: June 21, 1999.

Robert S. LaRussa,

Assistant Secretary for Import Administration.

[FR Doc. 99–16249 Filed 6–24–99; 8:45 am]

BILLING CODE 3510–DS–P

DEPARTMENT OF COMMERCE

International Trade Administration

[C–122–404]

Preliminary Results of Full Sunset Review: Live Swine From Canada

AGENCY: Import Administration, International Trade Administration, Department of Commerce.

ACTION: Notice of preliminary results of full sunset review: Live swine from Canada.

SUMMARY: On December 2, 1998, the Department of Commerce (''the Department'') initiated a sunset review of the countervailing duty order on live swine from Canada (63 FR 66527) pursuant to section 751(c) of the Tariff Act of 1930, as amended (''the Act''). On the basis of a notice of intent to participate filed on behalf of a domestic interested party and substantive comments filed on behalf of a domestic interested party and three respondent interested parties, the Department is conducting a full (240 day) review. As a result of this review, the Department preliminarily finds that termination of the countervailing duty order would be likely to lead to continuation or recurrence of a countervailable subsidy. The net countervailable subsidy and the nature of the subsidy are identified in the Preliminary Results of Review section of this notice.

FOR FURTHER INFORMATION CONTACT: Scott E. Smith or Melissa G. Skinner, Office of Policy for Import Administration, International Trade Administration, U.S. Department of Commerce, 14th & Constitution Avenue, Washington, D.C. 20230; telephone: (202) 482–6397 or (202) 482–1560, respectively.

EFFECTIVE DATE: June 25, 1999.

Statute and Regulations

This review was conducted pursuant to sections 751(c) and 752 of the Act. The Department's procedures for the conduct of sunset reviews are set forth in *Procedures for Conducting Five-year (''Sunset'') Reviews of Antidumping and Countervailing Duty Orders*, 63 FR 13516 (March 20, 1998) (''*Sunset Regulations*'') and in 19 C.F.R. Part 351 (1998) in general. Guidance on methodological or analytical issues relevant to the Department's conduct of sunset reviews is set forth in the Department's Policy Bulletin 98:3—*Policies Regarding the Conduct of Five-year (''Sunset'') Reviews of Antidumping and Countervailing Duty Orders; Policy Bulletin*, 63 FR 18871 (April 16, 1998) (''*Sunset Policy Bulletin*'').

Scope

The merchandise subject to this countervailing duty order is shipments of live swine, except U.S. Department of Agriculture (''USDA'') certified purebred breeding swine, slaughter sows and boars, and weanlings from Canada.[1] Weanlings are swine weighing up to 27 kilograms or 59.5 pounds.[2]

The merchandise subject to the order is currently classifiable under the Harmonized Tariff Schedule (''HTS'') item numbers 0103.91.00 and 0103.92.00. The HTS item numbers are provided for convenience and customs purposes. The written description remains dispositive.

Background

On December 2, 1998, the Department initiated a sunset review of the countervailing duty order on live swine from Canada (63 FR 66527), pursuant to section 751(c) of the Act. The Department received a Notice of Intent to Participate on behalf of the National Pork Producers Council (''NPPC'')[3] on December 17, 1998, within the deadline specified in section 351.218(d)(1)(i) of the *Sunset Regulations*. The NPPC claimed interested party status under 19 U.S.C. 1677(9)(C) and (F), as an association whose members are producers of live swine. In addition, the NPPC notes that it was the original petitioner in the underlying investigation. We received complete substantive responses from the NPPC, the Gouvernement du Quebec (''GOQ''), the Government of Canada (''GOC'') and the Canadian Pork Council and its Members (''CPC'') on January 6, 1999, within the deadline specified in the *Sunset Regulations* under section 351.218(d)(3)(i).

In their substantive responses, the GOQ and the GOC claimed interested party status under 19 U.S.C. 1677(9)(B), as a provincial and national government, respectively, of the country in which the subject merchandise is produced and from which it is exported. The GOQ also claimed interested party status under 19 U.S.C. 1677(3). The CPC claimed interested party status, under 19 U.S.C. 1677(9)(A), as a council whose members are hog producing organizations whose registered members are producers of the subject merchandise. The CPC also stated that a majority of its member organizations also serve as importers of record of the subject merchandise, whose imports are supplied by their registered producers. The Department, on January 13, 1999, received timely rebuttals from the NPPC, the GOQ, the GOC, and the CPC.

Because the Department received complete substantive responses from a domestic interested party and from the Canadian Government (both the GOC and the GOQ), and the CPC, and in accordance with section 351.218(e)(2)(i) of the *Sunset Regulations*, the Department is conducting a full (240 day) sunset review.

The Department determined that the sunset review of the countervailing duty order on live swine from Canada is extraordinarily complicated. In accordance with section 751(c)(5)(C)(v) of the Act, the Department may treat a review as extraordinarily complicated if it is a review of a transition order (*i.e.*, an order in effect on January 1, 1995). (*See* section 751(c)(6)(C) of the Act.) Therefore, on March 22, 1999, the Department extended the time limit for completion of the preliminary results of this review until not later than June 21,

[1] On August 29, 1996, the Department issued the final results of a changed circumstances review revoking the order, in part, with respect to slaughter sows and boars. The revocation became effective on April 1, 1991 (*see Live Swine from Canada; Final Results of Changed Circumstances Countervailing Duty Administrative Review, and Partial Revocation In Part of Countervailing Duty Order*, 61 FR 45402 (August 29, 1996).

[2] In the *Final Affirmative Countervailing Duty Determination; Live Swine and Fresh, Chilled and Frozen Pork Products from Canada*, 50 FR 25097 (June 17, 1985), the Department also calculated a net subsidy for dressed-weight swine. However, the Department terminated its investigation with respect to fresh, chilled, and frozen pork products from Canada based on a finding by the Commission that no material injury, threat of material injury, or retardation of an infant industry existed.

[3] The NPPC is a trade organization representing U.S. hog and pork producers through a federation of 44 affiliated state pork producer associations with a total membership of 85,000. NPPC's membership consists of small family farms and large hog operations.

1999, in accordance with section 751(c)(5)(B) of the Act.[4]

Determination

In accordance with section 751(c)(1) of the Act, the Department is conducting this review to determine whether termination of the countervailing duty order would be likely to lead to continuation or recurrence of a countervailable subsidy. Section 752(b) of the Act provides that, in making this determination, the Department shall consider the net countervailable subsidy determined in the investigation and subsequent reviews, and whether any change in the program which gave rise to the net countervailable subsidy has occurred that is likely to affect that net countervailable subsidy. Pursuant to section 752(b)(3) of the Act, the Department shall provide to the International Trade Commission (''the Commission'') the net countervailable subsidy likely to prevail if the order is revoked. In addition, consistent with section 752(a)(6), the Department shall provide to the Commission information concerning the nature of the subsidy and whether the subsidy is a subsidy described in Article 3 or Article 6.1 of the Subsidies Agreement.

The Department's determinations concerning continuation or recurrence of a countervailable subsidy, the net countervailable subsidy likely to prevail if the order is revoked, and nature of the subsidy are discussed below. In addition, parties' comments with respect to each of these issues are addressed within the respective sections.

Continuation or Recurrence of a Countervailable Subsidy

Party Comments

In its substantive response, the NPPC states that there is a strong likelihood that, were the countervailing duty order on live swine from Canada revoked, a countervailable subsidy would continue or recur. The NPPC claims that there are a number of Canadian hog subsidies currently in place and there is evidence that suggests the possibility of additional subsidies in the future. Further, the NPPC argues that the Canadian government has a history of replacing terminated programs with new ones and, for these reasons, the Department should not revoke the order on live swine from Canada.

The NPPC argues that the history and scope of subsidization of live swine from Canada demonstrates that subsidies will recur absent continuation of the order. The NPPC asserts that the Canadian federal and provincial governments have maintained a large number of subsidies intended to benefit pork producers and that the number of subsidies have increased over time. Further, the NPPC argues, as indicated in the Statement of Administrative Action (''the SAA'') H.R. Doc. No. 103–316, vol. 1 at 888 (1994), that continuation of a program is highly probative of the likelihood of continuation or recurrence of countervailable subsidies. Given the continued maintenance of a number of subsidy programs, the NPPC argues that the Department should conclude that a CVD order is necessary to prevent subsidies from continuing.

The NPPC also questions the method with which the Canadian federal and provincial governments terminate pork subsidy programs and, more importantly, the permanence of such terminations. The NPPC states, citing the *Sunset Policy Bulletin*, that the Department should consider the legal method by which the government eliminated the program and whether the government is likely to reinstate the program. The NPPC claims that the governments have demonstrated a pattern of eliminating and then replacing pork subsidy programs with new ones (*e.g.*, according to the NPPC, the National Tripartite Stabilization Plan was terminated and then replaced, for all intents and purposes, with the National Transition Scheme). The NPPC claims that, due to this factor, the small number of programs that have been eliminated have had little, if any, effect on the overall subsidization of the Canadian pork industry. The NPPC argues that as long as programs exist there is a real possibility of continued subsidization. The NPPC further claims that termination through administrative action, rather than through legislative means, is insufficient for the Department to determine that the program has indeed been terminated (*e.g.*, the Ontario Export Sales Program). In addition, the Department should not find programs terminated that have simply not been funded for a particular period or have expired (*e.g.*, the Alberta Livestock and Beeyard Compensation Program and the Canada/Ontario Western Agribition Livestock Transportation Assistance Program, respectively).

The NPPC also argues that there is a possibility of additional subsidies for Canadian hog producers that further supports the likelihood of continued subsidization. The NPPC notes that extremely low hog prices currently exist in North America and that the Department has recognized this situation as a trigger for subsidies. Further, the NPPC provided Canadian newspaper articles which suggest that the Canadian federal and provincial governments are discussing the possibility of establishing new subsidies for Canadian swine producers.

In addition, the NPPC claims that the Department should examine certain subsidies given to Canadian cattle producers in the context of swine subsidization. The NPPC argues that there are several programs being investigated by the Department in the ongoing investigation of cattle from Canada which may be applicable to swine. However, the NPPC notes that the Department has not yet made any determination on whether these programs confer countervailable benefits to cattle or swine. Nevertheless, the NPPC argues that Department should consider the existence of these programs in its sunset determination of live swine from Canada.

The NPPC notes that, over the life of this order, the level of subsidization for subject merchandise has reached a *de minimis* level on three occasions. It argues that three instances of *de minimis* subsidy rates, out of thirteen, are insufficient to determine that subsidies have permanently reached *de minimis* levels and that the CVD order is unneeded.

In their substantive responses, the GOC, GOQ, and the CPC argue that the likely effect of revocation is that the value of any countervailable subsidy would continue to be *de minimis*, or, effectively zero. The three respondents argue collectively that net benefits conferred by any remaining countervailable subsidies are so small as to be effectively non-existent.

The GOC and the CPC claim that the Department has reviewed 43 different federal and provincial subsidy programs since the original investigation in 1985. Of these, 28 have been found by the Department to have been terminated, with no residual benefits or replacement programs. Of the remaining 15 programs, eight have been determined not to provide countervailable benefits to live swine. Finally, of the remaining seven programs, four have been found in the most recently completed administrative review of the order (63 FR 47235, September 4, 1998) to convey *de minimis* benefits. The last three programs, according to the respondents, were found by the Department to have not been used. The GOC and the CPC assert that the *de minimis* benefits conferred on producers and the non-use of the remaining three programs

[4] *See Live Swine From Canada: Extension of Time Limit for Preliminary Results of Five-Year Review*, 64 FR 14884 (March 29, 1999).

indicate that revocation of the order would not lead to continuation or recurrence of countervailable subsidies.

The GOC and the CPC also argue that the programs terminated over the life of the order accounted for nearly all of the subsidization applicable to live swine. Termination of these and other programs led to the *de minimis* deposit and subsidy rates in the most recently completed reviews.

The GOQ echoes many of the same arguments as the GOC and the CPC. The submissions of the GOQ, however, deal more directly with the subsidy programs of Quebec. The GOQ asserts that, of the seven programs found by the Department to confer countervailable subsidies in the final results of the latest administrative review (63 FR 47235, September 4, 1998), none was a Quebec program and only one was a national program (the National Transition Scheme for Hogs Program). According to the GOQ, this last remaining national program was terminated prior to the completion of the latest administrative review and has now been found to confer no benefits to hog producers.

The GOQ also claims that three other programs, two of which were created by the GOQ, were found to have no impact on the net subsidy rate from the latest administrative review because the benefits conveyed were too small. These two programs were the Technology Innovations Program and the Support for Strategic Alliances Program.[5] According to the GOQ, hog producers, as of March 31, 1998, can no longer apply for benefits under the Technology Innovations Program. As for the Support for Strategic Alliances Program, the GOQ states that it expired on March 31, 1998.

Finally, the GOQ notes that the Department examined another Quebec program in the latest administrative review—Quebec's Farm Income Stabilization Insurance program (''FISI''). The GOQ states that the Department found this program not to be used because no hogs benefiting from FISI were exported to the United States. Moreover, the GOQ claims that FISI has not been used with respect to hogs exported to the United States, from April 1, 1996 to the present.

Collectively, the GOQ, GOC, and CPC argue that, in light of the criterion for revocation as outlined in the *Sunset Policy Bulletin,* the termination without replacement of all major countervailed programs, combined with the findings of non-countervailability, non-usage, and no impact of the remaining programs, compels the conclusion that subsidies would not be likely to continue or recur were the order to be revoked (*see* January 6, 1999, Substantive Response of the GOC).

Parties' Rebuttal Comments

In its rebuttal, the NPPC argues that the GOC, GOQ, and CPC assessments of the likelihood of continued subsidization is flawed because it focuses on active, ''non-terminated'' countervailable subsidy programs and ignores those subsidies that continue to exist, but have been found to be ''not used.'' The NPPC asserts that such an assessment is invalid with respect to the Department's determination of whether subsidization will continue. They argue that a program determined to confer benefits in one period may provide benefits in another and that the distinction between these ''sets'' of programs is irrelevant.

The NPPC also argues that the GOC and CPC are incorrect in claiming that there have been no replacements for programs that have been terminated over the life of the order. The NPPC asserts that the fact that some programs have been terminated while other new countervailable programs have been created demonstrates that there has been replacement of terminated programs.

The CPC, GOQ, and GOC assert that the NPPC has incorrectly reported the most recent administrative review as covering 27 subsidy programs. The respondents argue that the NPPC has reported that 27 countervailable programs continue to exist, but has ignored the fact that many of these programs never existed, were never used by hog producers, or never provided countervailable benefits. Further, the CPC argues that the NPPC's attempts to discredit the Department's findings concerning program terminations is not only unfounded, but has already been resolved in the most recent administrative review (63 FR 47235, September 4, 1998).

The GOQ, GOC, and CPC argue that the NPPC's allegations concerning the possible future creation of countervailable subsidies is irrelevant. First, the respondents' argue that there is no credible evidence to suggest that new countervailable subsidy and/or price stabilization programs are likely to be created. Second, respondents argue that the NPPC has failed to provide ''good cause'' for the Department to consider any programs not previously examined by the Department. Therefore, such accusations should play no part in the Department's likelihood and net subsidy determinations.

Department's Determination

Drawing on the guidance provided in the legislative history accompanying the Uruguay Round Agreements Act (''URAA''), specifically the SAA, H.R. Doc. No. 103–316, vol. 1 (1994), the House Report, H.R. Rep. No. 103–826, pt.1 (1994), and the Senate Report, S. Rep. No. 103–412 (1994), the Department issued its *Sunset Policy Bulletin* providing guidance on methodological and analytical issues, including the basis for likelihood determinations. The Department clarified that determinations of likelihood will be made on an order-wide basis (*see* section III.A.2 of the *Sunset Policy Bulletin).* Additionally, the Department normally will determine that revocation of a countervailing duty order is likely to lead to continuation or recurrence of a countervailable subsidy where (a) a subsidy program continues, (b) a subsidy program has been only temporarily suspended, or (c) a subsidy program has been only partially terminated (*see* section III.A.3.a of the *Sunset Policy Bulletin*). Exceptions to this policy are provided where a company has a long record of not using a program (*see* section III.A.3.b of the *Sunset Policy Bulletin*).

In its final affirmative countervailing duty determination (50 FR 25097, June 17, 1985), the Department determined that the net subsidy from the 23 programs investigated for live swine from Canada was Can$0.02602/lb. (bonding rate Can$0.04390/lb.).[6] Since

[5] Despite the Department's treatment of these two programs as separate, the GOQ claims that these programs are not separate programs but represent two of the three components of the Canada/Quebec Subsidiary Agreement on Agri-Food Development.

[6] In the *Final Affirmative Countervailing Duty Determination; Live Swine and Fresh, Chilled and Frozen Pork Products from Canada,* 50 FR 25097 (June 17, 1985), the Department also calculated a net subsidy for dressed-weight swine of Can$0.03272/lb. (bonding rate Can$0.025523/lb.). However, the Department terminated its investigation with respect to fresh, chilled, and frozen pork products from Canada based on a finding by the Commission that no material injury, threat of material injury, or retardation of an infant industry existed. Further, on August 29, 1996, the Department issued the final results of a changed circumstances review revoking the order, in part, with respect to slaughter sows and boars. The revocation became effective on April 1, 1991 (*see Live Swine from Canada; Final Results of Changed Circumstances Countervailing Duty Administrative Review, and Partial Revocation In Part of Countervailing Duty Order,* 61 FR 45402 (August 29, 1996). The programs determined by the Department in the original investigation to confer, or have the potential to confer, countervailable subsidies were:

1. Agricultural Stabilization Act
2. Record of Performance Program
3. Quebec Special Credits for Hog Producers
4. Prince Edward Island Interest Payments on Assembly Yard Loan
5. Saskatchewan Hog Assured Returns

Continued

the original investigation in 1985, the Department has determined, during various administrative reviews of this order, that a number of the programs examined in the original investigation have been terminated.[7] Furthermore, the Department has determined, in the final results of administrative reviews, that some of the remaining programs from the original investigation do not confer countervailable benefits.[8] The Department finds that there are four countervailable subsidy programs from the original investigation which continue to exist.[9]

In addition, the Department can confirm, through the final results of administrative reviews, that there are several countervailable subsidy programs created by the national and provincial governments of Canada after the original investigation. A number of these programs are also still in existence.[10]

As claimed by the GOQ, one countervailable subsidization program examined in the original investigation, the Quebec Farm Income Stabilization Insurance Program, is not currently being used. In addition, two subsidy programs created after the imposition of the order are also not currently being used. However, current use is not the standard employed by the Department in sunset reviews. As stated in the *Sunset Policy Bulletin*, ''where a company has a long track record of not using a program, including during the investigation, the Department normally will determine that the mere availability of the program does not, by itself, indicate likelihood of continuation or recurrence of a countervailable subsidy.'' Therefore, with respect to the three programs addressed by the GOQ, the Department preliminarily determines that these three programs do not have a ''long track record'' of non-use.[11]

With respect to the termination of programs, the Department has preliminarily determined, in this case, to follow prior administrative review determinations concerning terminated programs. In these prior determinations, the Department addressed evidence demonstrating that programs were terminated and not merely suspended. In addition, the Department addressed the NPPC's arguments concerning the

6. British Columbia Farm Income Insurance Plan
7. Manitoba Hog Income Stabilization Plan
8. New Brunswick Hog Price Stabilization Plan
9. Newfoundland Hog Price Support Program
10. Nova Scotia Pork Price Stabilization Program
11. Prince Edward Island Price Stabilization Program
12. Quebec Farm Income Stabilization Insurance Programs
13. New Brunswick Swine Assistance Program
14. New Brunswick Livestock Incentives Program
15. New Brunswick Hog Marketing Program
16. Saskatchewan Financial Assistance for Livestock and Irrigation
17. Nova Scotia Swine Herd Health Policy
18. Nova Scotia Transportation Assistance
19. Ontario Farm Tax Reduction Program
20. Ontario (Northern) Livestock Programs
21. Prince Edward Island Hog Marketing and Transportation Subsidies
22. Quebec Meat Sector Rationalization Program
23. Price Edward Island Swine Development Program

[7] The Department has determined that the following programs, examined in the original investigation, have been terminated with no present residual benefits:

1. Hog Stabilization Payments under Agricultural Stabilization Act (Tripartite Agreement) (terminated prior to April 1, 1994) (62 FR 18087, April 14, 1997)
2. Ontario (Northern) Livestock Programs (terminated April 1, 1991) (58 FR 54112, October 20, 1993)
3. Prince Edward Island Interest Payments on Assembly Yard Loan (terminated prior to April 1, 1991)(61 FR 26879, May 29, 1996)
4. Saskatchewan Hog Assured Returns (terminated March 31, 1991) (62 FR 47460, September 9, 1997)
5. British Columbia Farm Income Insurance Plan (terminated July 2, 1994)(61 FR 52426, October 7, 1996)
6. Manitoba Hog Income Stabilization Plan (terminated June 28, 1986)(53 FR 22189, June 14, 1988)
7. New Brunswick Hog Price Stabilization Plan (terminated March 31, 1991)(61 FR 26889, May 29, 1996)
8. Nova Scotia Pork Price Stabilization Program (terminated prior to March 31, 1991)(58 FR 54112, October 20, 1993)
9. Prince Edward Island Price Stabilization Program (terminated prior to March 31, 1991)(59 FR 12243, March 16, 1994)
10. New Brunswick Swine Assistance Program (program transferred to New Brunswick Swine Industry Financial Restructuring Program; 62 FR 47460, September 9, 1997 (*see* footnote #11))
11. Nova Scotia Swine Herd Health Policy (terminated March 31, 1996)(62 FR 47460, September 9, 1997)

[8] Of the 23 programs originally investigated, the following have been determined by the Department not to confer countervailable benefits:

1. New Brunswick Hog Marketing Program (determination 55 FR 20812, May 21, 1990)
2. Ontario Farm Tax Reduction Program (determination 61 FR 26888, May 29, 1996)
3. Quebec Meat Sector Rationalization Program (determination 50 FR 25097, June 17, 1985; 50 FR 32880, August 15, 1985))
4. Prince Edward Island Hog Marketing and Transportation Subsidies (determination 55 FR 20812, May 21, 1990)
5. Record of Performance Program (determination 54 FR 651, January 9, 1989)
6. Nova Scotia Transportation Assistance Program (determination 53 FR 22189, June 14, 1988)
7. Prince Edward Island Swine Development Program (determination 55 FR 20812, May 21, 1990)
8. Saskatchewan Financial Assistance for Livestock and Irrigation (determination 53 FR 22189, June 14, 1988)
9. Quebec Special Credits for Hog Producers (determination 53 FR 22189, June 14, 1988)

In the original investigation (50 FR 25097, June 17, 1985), the Department determined that the Quebec Meat Sector Rationalization Program conferred benefits for the establishment, standardization, expansion, or modernization of slaughterhouses, processing plants, or plants preparing foods that contain meat. Because this program only confers benefits to those producers/exporters of fresh, chilled and frozen pork products, it is not applicable to producers/exporters of live swine.

[9] Of the 23 programs originally investigated, the following countervailable programs continue to exist:

1. Ontario Sales Swine Assistance (determined to confer benefits in the original investigation; 50 FR 25097, June 17, 1985)
2. Quebec Farm Income Stabilization Program (determined to confer benefits in original investigation; 50 FR 25097, June 17, 1985)
3. New Brunswick Livestock Incentives Program (determined to confer benefits in original investigation; 50 FR 25097, June 17, 1985)
4. Newfoundland Hog Price Support Program (determined to confer benefits in the original investigation; 50 FR 25097, June 17, 1985)

[10] The following are countervailable subsidy programs still in existence and created after the imposition of the order, which have not been officially terminated, and which confer, or have the potential to confer, countervailable benefits:

1. Nova Scotia Improved Sire Program (identified in 86/87 review; 56 FR 10410, March 12, 1991)
2. Technology Innovation Program Under the Agri-Food Agreement (identified in 94/95 review; 62 FR 18087, April 14, 1997)
3. Ontario Livestock and Poultry and Honeybee Compensation Program (identified in 89/90 review; 56 FR 50560, October 7, 1991)
4. Ontario Bear Damage to Livestock Compensation Program (identified in 94/95 review; 62 FR 18087, April 14, 1997)
5. Ontario Rabies Indemnification Program (identified in 89/90 review; 56 FR 29224, June 26, 1991)
6. New Brunswick Swine Industry Financial Restructuring Program (identified in the 85/86 review; 53 FR 22189, June 14, 1988)
7. Western Diversification Program (identified in 89/90 review; 56 FR 50560, October 7, 1991)
8. Support for Strategic Alliances Program Under the Agri-Food Agreement (determined to confer benefits prior to 94/95 review; 62 FR 18087, April 14, 1997)
9. Agricultural Products Board Program (identified in 91/92 review; 61 FR 52408, October 7, 1996)
10. Newfoundland Weanling Bonus Incentive Policy (identified in 86/87 review; 56 FR 10410, March 12, 1991)
11. Newfoundland Hog Price Stabilization Program (determined to confer benefits in April 1985)
12. Federal Atlantic Livestock Feed Initiative (identified in 91/92 review; 61 FR 52408, October 7, 1996)
13. Newfoundland Farm Products Corporation Hog Price Support Program (identified in 96/97 review; 63 FR 23723, April 30, 1998 and 63 FR 47235, September 4, 1998)

[11] The three programs are: (1) The Ontario Bear Damage to Livestock Compensation Program, (2) the Ontario Rabies Indemnification Program and (3) the Quebec Income Stabilization Program. The last known use of the Ontario Bear Damage to Livestock Compensation Program was during the 1994/1995 Administrative Review (63 FR 2204, January 14, 1998). The last known use of the Quebec Farm Income Stabilization Insurance Program was April 1, 1996 (*see* Substantive Response of GOQ at 11). The last known use of the Ontario Rabies Indemnification Program was during the 1993/1994 Administrative Review (61 FR 52408, October 7, 1996; Amended, 61 FR 58383, November 14, 1996). The Department finds the recent use of these three programs does not constitute a long track record of non-use.

Department's criteria and/or methodology in determining whether a program had been terminated (*see Live Swine from Canada; Final Results of Countervailing Duty Administrative Review*, 63 FR 47235 (September 4, 1998)).

With respect to the NPPC's argument that certain programs were terminated solely through administrative action, the Department agrees that the elimination of a program administratively is not as strong a basis for termination as elimination through legislative action (*see Sunset Policy Bulletin*). However, where a program was put in place administratively, it is reasonable to expect that the government would terminate the program in the same manner (*see Final Results of Expedited Sunset Review: Heavy Iron Construction Castings from Brazil*, 64 FR 30313 (June 7, 1999). In these circumstances, unless there is a basis for concluding that the government is likely to reinstate the program, we believe it is appropriate to treat the program as terminated. The NPPC has argued that reinstatement will be likely in this case because many new programs have been put in place during the life of the order. In this case, the record does not indicate a connection between the programs that have been terminated and the new programs. Therefore, the Department does not view the creation of new programs as supporting the conclusion that terminated programs will be reinstated.

The Department finds that the continued existence of countervailable subsidies is highly probative of the likelihood of continuation or recurrence of countervailable subsidies. Because the Government of Canada currently maintains countervailable subsidy programs, as acknowledged by the GOC, the GOQ, and the CPC, and as evidenced by the most recent administrative review, because there are programs that have not been officially terminated, and because no program has a ''long track record'' of non-use, the Department finds that there is a likelihood of continuation or recurrence of a countervailable subsidy if the order were to be revoked. As noted above, there are countervailable subsidy programs created after the imposition of the order which continue to exist.[12] The Department finds that the creation and maintenance of countervailable subsidies after the imposition of the order strongly suggests and supports the conclusion that revocation of the order would likely lead to continuation or recurrence of countervailable subsidies.

Because the Department is basing its likelihood determination on the current existence and maintenance of countervailable subsidy programs benefitting, or potentially benefitting, swine producers and/or exporters by the federal and provincial governments of Canada, the Department finds no reason to examine programs which have not been previously reviewed by the Department.

Net Countervailable Subsidy

Party Comments

The NPPC argues that the net subsidy calculated in the original investigation of live swine from Canada is not representative of the net subsidy likely to prevail if the order were revoked. Instead, the NPPC asks that, as stipulated in the *Sunset Policy Bulletin*, the Department use a more recently calculated rate. The NPPC states that there are several factors that require adjustment of the original subsidy rate (*see* Substantive Response of NPPC at 16). The NPPC argues that the chief subsidy programs driving this order have always been stabilization programs. These programs are designed to increase payments to producers when market prices fall below support prices. The NPPC claims that, as hog prices are at historically low levels, subsidy payments will be at historically high levels. Furthermore, the NPPC states that Canadian federal and provincial governments are currently considering additional subsidy programs in response to the hog crisis. Lastly, the NPPC argues that a review of the case history indicates that only a few of the programs from the original investigation continue to exist and the majority of the countervailable programs which exist at present are programs created after the imposition of the order.

For these reasons, the NPPC argues that the Department should not use the net subsidy from the original investigation, but instead should use the net subsidy rate from the seventh or eighth administrative review.[13] The NPPC argues that these reviews cover the largest number of programs ever investigated and also resulted in high net subsidy rates as a result of price stabilization programs. Alternatively, the NPPC suggests the Department use the net subsidy from the fifth administrative review as it represents the highest rate ever calculated.[14]

The GOC and CPC agree with the NPPC about the use of a net subsidy rate other than that calculated in the original investigation. The GOC and CPC argue, collectively, that the net subsidy from the original investigation is not reflective of the rate likely to prevail if the order were revoked. They point out that a number of the programs examined in the original investigation have since been terminated or deemed non-countervailable, and that adjustments would need to be made to this rate to reflect these changes. Collectively, the respondents argue that the net subsidy likely to prevail, after these corrections have been made, will be *de minimis* or, effectively zero.

The GOQ also argues that the net subsidy likely to prevail will be *de minimis* and, therefore, the order should be revoked. The GOQ argues that as subsidy programs have been terminated, consistently not used, determined to be non-countervailable, and created throughout the life of the order, the rate from the investigation as well as from any final results of administrative review would not accurately reflect the net subsidy likely to prevail if the order were revoked.

Parties' Rebuttal Comments

With respect to the net countervailable subsidy likely to prevail, the NPPC argues that the GOC, GOQ, and CPC incorrectly focus on the most recent subsidy rates calculated for the order. According to the NPPC, the Department's regulations clearly state that the original investigation should be the starting point for predicting future subsidy rates as these are the only rates that reflect the behavior of exporters and foreign governments without the discipline of the order. In their focus on this most recent rate, the NPPC argues, the respondents have ignored the fluctuations in the benefit levels which have occurred over the life of order.

The CPC claims that the NPPC's suggested choice of net subsidy rates for the Department are unsupported by the record. The CPC argues that several of the programs included in the calculation of these rates have since been terminated and, therefore, the net subsidy rates from the NPPC's suggestions are invalid. Lastly, the GOC reiterates its argument that the net

[12] *See supra* n.11. and accompanying text.

[13] The net subsidy from the seventh administrative review is Can$0.0587/lb. and the net subsidy from the eighth administrative review is Can$0.0611/lb. (*See Live Swine from Canada; Final Results of Countervailing Duty Administrative Review*, 61 FR 52408 (October 7, 1996) and *Live Swine from Canada; Amended Final Results of Countervailing Duty Administrative Review*, 61 FR 58383 (November 14, 1996)).

[14] The net subsidy from the fifth administrative review is Can$0.0927/lb. (*See Live Swine from Canada; Final Results of Countervailing Duty Administrative Review*, 56 FR 50560 (October 7, 1991) and *Live Swine from Canada; Amended Final Results of Countervailing Duty Administrative Review*, 58 FR 47123 (September 7, 1993)).

subsidy rate from the original investigation is an inappropriate choice as the rate likely to prevail if the order were revoked.

Department's Determination

In the *Sunset Policy Bulletin,* the Department stated that, consistent with the SAA and House Report, the Department normally will select a rate from the investigation, because that is the only calculated rate that reflects the behavior of exporters and foreign governments without the discipline of an order or suspension agreement in place. The Department noted that this rate may not be the most appropriate rate if, for example, the rate was derived from subsidy programs which were found in subsequent reviews to be terminated, there has been a program-wide change, or the rate ignores a program found to be countervailable in a subsequent administrative review.[15]

The Department agrees with all parties that the net countervailable subsidy rate from the original investigation is not probative of the net countervailable subsidy rate likely to prevail if the order were to be revoked. As noted above, sections III.B.3.a and III.B.3.c of the *Sunset Policy Bulletin* provide that the Department may adjust the net countervailable subsidy where, ''* * * the Department has conducted an administrative review of the order * * * and found that a program was terminated with no residual benefits and no likelihood of reinstatement * * *'' or where, ''* * * the Department has conducted an administrative review of the order * * * and found a new countervailable program, or found a program previously not used but subsequently found to be countervailable. * * *''[16]

Several programs from the investigation have been terminated, found not to confer countervailable subsidies, or have never been used. These terminated programs provide no residual benefits which persist. Additionally, several new programs have been created since the imposition of the order. Of these new programs, the Department has determined that some have been terminated. Therefore, pursuant to the *Sunset Policy Bulletin*, the net countervailable subsidy from the original investigation has been adjusted to reflect the termination of programs, as well as the identification of new programs found to be countervailable in subsequent administrative reviews. Consequently, the Department preliminarily determines that the net subsidy rate that would be likely to prevail in the event of revocation of the order would be Can$0.01802234/lb.[17] *See* Memorandum to File Regarding Calculation of the Net Countervailable Subsidy, June 21, 1999.

In determining the net countervailable subsidy rate likely to prevail, the Department combined the benefits from ten programs that continue to exist.[18] The individual subsidy rates for these ten programs, consistent with the *Sunset Policy Bulletin,* were those calculated in the original investigation because these are the only rates that reflect the behavior of exporters and/or foreign governments without the discipline of the order. For subsidy programs established after the imposition of the order, we have included in this calculation, the subsidy rates from the final results of the first administrative review in which rates were calculated. We note that a review of the countervailable subsidy rates, for each of post-order established programs, does not demonstrate a pattern of increased usage after introduction.

Nature of the Subsidy

In the *Sunset Policy Bulletin,* the Department stated that, consistent with section 752(a)(6) of the Act, the Department will provide information to the Commission concerning the nature of the subsidy and whether the subsidy is a subsidy described in Article 3 or Article 6.1 of the Subsidies Agreement.

Given that receipt of benefits under any of the programs included in our calculation are not contingent upon export. Therefore, none of these programs fall within the definition of an export subsidy under Article 3.1(a) of the Subsidies Agreement.

Each of these programs are, however, programs that could be found inconsistent with Article 6 if the net countervailable subsidy exceeds 5 percent, as measured in accordance with Annex IV of the Subsidies Agreement.[19] The Department, however, has no information with which to make such a calculation, nor do we believe it appropriate to attempt such calculation in the course of a sunset review. Rather, we intend to provide to the Commission the following program descriptions.

Subsidy Programs

The subsidy programs identified by the Department and used in its determination of the net subsidy likely to prevail if the order were revoked are listed below. A description of each is also included.

New Brunswick Livestock Incentives Program

This program provides loan guarantees to livestock producers

[15] *See* Section III.B.3 of the *Sunset Policy Bulletin*.

[16] *See* Section III.B.3.a and Section III.B.3.c of the *Sunset Policy Bulletin*.

[17] Please note that the Department considers anything less than 0.5 percent (or Can$0.0030/lb.) to be de minimis. *See Live Swine From Canada; Final Results of Countervailing Duty Administrative Review,* 56 FR 50560 (October 7, 1991).

[18] The following countervailable programs have been determined by the Department not to have been officially terminated by administrative decree or legislative repeal. The programs are:

1. Nova Scotia Improved Sire Program (Can$0.0002/lb., first rate calculated in 95/96 review; 62 FR 47460, September 9, 1997)
2. Technology Innovation Program Under the Agri-Food Agreement (Can$0.0002/lb., found to be used in the 94/95 review; 62 FR 18087, April 14, 1997 (used most recently in 96/97 review))
3. Ontario Livestock and Poultry and Honeybee Compensation Program (Can$0.0002/lb., found to be used in 89/90 review; 56 FR 29224 (first rate calculated in 93/94 review; 61 FR 26879, May 29, 1996) (used most recently in 96/97 review))
4. Ontario Bear Damage to Livestock Compensation Program (Can$0.0002/lb., found to be used in the 94/95 review; 62 FR 18087, April 14, 1997 (used most recently in 94/95 review))
5. Ontario Rabies Indemnification Program (Can$0.0001/lb., found to be used in the 89/90 review; 56 FR 29224 (used most recently in 93/94 review))
6. Support for Strategic Alliances Program Under the Agri-Food Agreement
7. Newfoundland Hog Price Support Program (Can$0.00013/lb., found to be used in investigation; 50 FR 25097 (used most recently in 85/86 review))
8. New Brunswick Swine Industry Financial Restructuring Program (Can$0.00000154/lb.,
9. Quebec Farm Income Stabilization Program (Can$0.01696/lb., found to be used in the investigation; 50 FR 25097 (used most recently in the 95/96 review)) and
10. New Brunswick Livestock Incentives Program (Can$0.00003/lb., found to be used in investigation; 50 FR 25097 (used most recently in 96/97 review) found to be used 85/86 review; 53 FR 22189 (used most recently in 96/97 review).

For six additional programs, no subsidy rate has ever been calculated by the Department. Therefore, although these programs have not been determined to be terminated, we have not included them in our calculation.

1. Newfoundland Farm Products Corporation Hog Price Support Program (not used or published)
2. Western Diversification Program (not used or published) (Can$0.0000008/lb., first rate calculated in 96/97 review; 63 FR 23723, April 30, 1998)
3. Agricultural Products Board Program (not used or published)
4. Newfoundland Weanling Bonus Incentive Policy (not used or published)
5. Federal Atlantic Livestock Feed Initiative (not used or published)
6. Ontario Sales Swine Assistance (not used or published).

[19] The GOC and the GOQ have previously requested ''green box'' treatment for the Support for Strategic Alliances and Technology Innovation programs under the Agri-Food Agreement. However, the Department has not made a determination on whether benefits from these programs are non-countervailable as ''green box'' subsidies pursuant to section 771(5B)(F) of the Act. *See Live Swine from Canada; Final Results of Countervailing Duty Administrative Review,* 63 FR 47235 (September 4, 1998) and *Live Swine from Canada; Preliminary Results of Countervailing Duty Administrative Review,* 63 FR 23723 (April 30, 1998).

purchasing cattle, sheep, swine, foxes, and mink for breeding purposes, and for feeding and finishing livestock for slaughter.

Ontario Bear Damage to Livestock Compensation Program

This program provides compensation for the destruction of, or injury to, certain types of livestock by bears.

Ontario Livestock and Poultry and Honeybee Compensation Program

This program provides grants to compensate producers for livestock and poultry injured or killed by wolves, coyotes, or dogs.

Ontario Rabies Indemnification Program

This program compensates livestock producers, including producers of cattle, horses, sheep, swine, and goats, for damage caused by rabies.

Quebec Farm Income Stabilization Insurance Program

Schemes under this program guarantee a positive net annual income to participants when their income falls below the stabilized net annual income.

Technology Innovation Program Under the Agri-Food Agreement

This program provides grants to producers within a designated geographical region of Canada (i.e., Quebec) for technology innovation.

New Brunswick Swine Industry Financial Restructuring Program

This program provides subsidies on medium-term loans to hog producers. This program was available to hog producers who entered production or underwent expansion after 1979.

Newfoundland Hog Price Support Program

This program is a price stabilization program which provides pork producers interest-free loans from the provincial government equal to the difference between a stabilization price based on the cost of production and the market price for hogs.

Nova Scotia Improved Sire Program

This program provides grants to purebred and commercial swine producers for the purchase of boars.

Support for Strategic Alliances Under the Agri-Food Agreement

The purpose of this program area is stimulate cooperation and promote strategic activities intended to improve competitiveness in domestic and foreign markets.

Preliminary Results of Review

Any interested party may request a hearing within 30 days of publication of this notice in accordance with 19 CFR 351.310(c). Any hearing, if requested, will be held on August 18, 1999. Interested parties may submit case briefs no later than August 9, 1999, in accordance with 19 CFR 351.309(c)(1)(i). Rebuttal briefs, which must be limited to issues raised in the case briefs, may be filed not later than August 16, 1999. The Department will issue a notice of final results of this sunset review, which will include the results of its analysis of issues raised in any such comments, no later than October 28, 1999.

This five-year (''sunset'') review and notice are in accordance with sections 751(c), 752, and 777(i)(1) of the Act.

Dated: June 21, 1999.

Richard W. Moreland,

Acting Assistant Secretary for Import Administration.

[FR Doc. 99–16250 Filed 6–24–99; 8:45 am]

BILLING CODE 3510–DS–P

DEPARTMENT OF COMMERCE

National Oceanic and Atmospheric Administration

[I.D. 062199B]

The GLOBE Program

AGENCY: National Marine Fisheries Service (NMFS), National Oceanic and Atmospheric Administration (NOAA), Commerce.

ACTION: Proposed collection; comment request.

SUMMARY: The Department of Commerce, as part of its continuing effort to reduce paperwork and respondent burden, invites the general public and other Federal agencies to take this opportunity to comment on proposed and/or continuing information collections, as required by the Paperwork Reduction Act of 1995, Public Law 104–13 (44 U.S.C. 3506(c)(2)(A)).

DATES: Written comments must be submitted on or before August 24, 1999.

ADDRESSES: Direct all written comments to Linda Engelmeier, Departmental Forms Clearance Officer, Department of Commerce, Room 5327, 14th and Constitution Avenue NW, Washington DC 20230 (or via the Internet at LEngelme@doc.gov).

FOR FURTHER INFORMATION CONTACT: Requests for additional information or copies of the information collection instrument(s) and instructions should be directed to Harriet Chesi, 744 Jackson Place, Washington, D.C. 20503, 202–395–7600.

SUPPLEMENTARY INFORMATION:

I. Abstract

The GLOBE (Global Learning and Observations to Benefit the Environment) Program is an international science and environment education program involving elementary and secondary students. Feedback from participating teachers and students is necessary to guide necessary program changes, to help the program meet its goals, and to aid the continued growth of the program.

II. Method of Collection

Annual surveys of teachers and students involved in the GLOBE Program will be conducted through the World Wide Web, with hard copies of the survey instruments available as needed.

III. Data

OMB Number: 0648–0310

Form Number: None

Type of Review: Regular submission

Affected public: Individuals

Estimated Number of Respondents: 1,153

Estimated Time Per Response: 20 minutes for teacher surveys, 80 minutes for student surveys

Estimated Total Annual Burden Hours: 709

Estimated Total Annual Cost to Public: $0

IV. Request for Comments

Comments are invited on: (a) Whether the proposed collection of information is necessary for the proper performance of the functions of the agency, including whether the information shall have practical utility; (b) the accuracy of the agency's estimate of the burden (including hours and cost) of the proposed collection of information; (c) ways to enhance the quality, utility, and clarity of the information to be collected; and (d) ways to minimize the burden of the collection of information on respondents, including through the use of automated collection techniques or other forms of information technology.

Comments submitted in response to this notice will be summarized and /or included in the request for OMB approval of this information collection; they also will become a matter of public record.

Dated: June 18, 1999.

Linda Engelmeier,

Departmental Forms Clearance Officer, Office of the Chief Information Officer.

[FR Doc. 99–16203 Filed 6–24–99; 8:45 am]

BILLING CODE 3510–22–F

DEPARTMENT OF COMMERCE

National Oceanic and Atmospheric Administration National Marine Fisheries Service

DEPARTMENT OF THE INTERIOR

Fish and Wildlife Service

[I.D. 061099C]

Notice of Application to Amend an Endangered Species Act Incidental Take Permit to Include Canada Lynx and Puget Sound/Coastal Bull Trout on the Plum Creek Timber Company Permit for Timber Harvest in the State of Washington, and to Issue an Incidental Take Permit for Middle Columbia River Steelhead, and Puget Sound Chinook to Plum Creek Timber Company in the State of Washington.

AGENCIES: National Marine Fisheries Service (NMFS), Nationl Oceanic and Atmospheric Administration, Commerce. U.S. Fish and Wildlife Service (FWS), Interior.

ACTION: Receipt of applications to amend an incidental take permit (PRT–808398) and to issue an incidental take permit (1220).

SUMMARY: This notice advises the public that FWS has received a request to add Canada lynx (*Lynx canadensis*) and Puget Sound/Coastal bull trout (*Salvelinus confluentus*) to the species covered by incidental take permit PRT–808398, issued to the Plum Creek Timber Company on June 27, 1996. NMFS has received a request for an incidental take permit (1220) for the Middle Columbia River (MCR) steelhead (*Oncorhynchus mykiss*) and Puget Sound (PuS) chinook salmon (*O. tshawytscha*). These requests have been submitted to FWS and NMFS (the Services) pursuant to the Implementation Agreement for the Habitat Conservation Plan (Plan) accompanying the incidental take permit. FWS is proposing to add Canada Lynx and Puget Sound/Coastal bull trout to Plum Creek's permit, and NMFS is proposing to issue an incidental take permit for the MCR steelhead and PuS chinook salmon. The purpose of this notice is to seek public comment on FWS' proposed permit amendment and NMFS' permit issuance.

DATES: Written comments regarding FWS' proposal to add Canada lynx and Coastal/Puget Sound bull trout to the Plum Creek permit or on NMFS' proposal to issue a permit for MCR steelhead and PuS chinook must be received on or before July 26, 1999.

ADDRESSES: Written comments on lynx and bull trout should be addressed to William Vogel, FWS; 510 Desmond Drive, S.E; Suite 101; Lacey, Washington 98503; and written comments on steelhead and chinook should be addressed to Dennis Carlson, NMFS; 510 Desmond Drive, S.E; Suite 103; Lacey, Washington 98503. Comments addressing general issues and all four species may be sent to either of the Services. Documents cited in this notice and comments received will be available for public inspection by appointment during normal business hours (8 a.m. to 5 p.m., Monday through Friday).

FOR FURTHER INFORMATION CONTACT: William Vogel, Wildlife Biologist; FWS; 510 Desmond Drive, S.E; Suite 101; Lacey, Washington 98503, (360) 753-4367 or Dennis Carlson, Fisheries Biologist; NMFS; 510 Desmond Drive, S.E; Suite 101; Lacey, Washington 98503, (360) 753-5828.

SUPPLEMENTARY INFORMATION:

Background

On June 27, 1996, FWS issued an incidental take permit (PRT–808398) to Plum Creek Timber Company, L.P., pursuant to section 10(a)(1)(B) of the Endangered Species Act (ESA) of 1973, as amended (16 U.S.C. 1532 et seq.). The permit authorized the incidental take of the threatened northern spotted owl (*Strix occidentalis caurina*), marbled murrelet (*Brachyramphus marmoratus marmoratus*), and grizzly bear (*Ursus arctos=U.a. horribilis*), and the endangered gray wolf (*Canis lupus*), in the course of the otherwise lawful forest management and related land-use activities on Plum Creek lands in portions of King and Kittitas Counties, Washington. NMFS did not issue a permit as no species under NMFS' jurisdiction on the Plum Creek lands were listed under the ESA at the time the FWS permit was issued. Pursuant to the Plan and the Implementation Agreement, Plum Creek received assurances from the Services that then-unlisted vertebrate species, which may occur on Plum Creek lands would be added to the permit upon listing of those species in accordance with the ESA, the Implementation Agreement, and the Plan. On September 11, 1997, Plum Creek requested the addition of bull trout to their permit. On July 14, 1998, following the completion of a public comment period, Biological Opinion, and Set of Findings, FWS amended incidental take permit PRT–808398 to include the Columbia River Basin population of bull trout on the permit.

On July 8, 1998, FWS proposed to list the Canada lynx as threatened throughout its range in the contiguous United States, (63 FR 36994). On June 10, 1998, FWS proposed to list the Puget Sound/Coastal population of bull trout as threatened, (63 FR 31693).

On March 25, 1999, NMFS published a final rule listing the MCR and Upper Willamette River evolutionary significant units (ESUs) of steelhead as threatened species (64 FR 14517). In addition, on February 5, 1999, NMFS proposed to designate critical habitat for nine ESUs of steelhead previously listed and currently proposed for listing under the ESA, including Washington ESUs (64 FR 5740). Also on March 24, 1999, NMFS published a final rule listing the PuS chinook salmon as threatened (63 FR 11482).

The September 11, 1997, request from Plum Creek to add bull trout to the permit was partially fulfilled when FWS included the Columbia River Basin population of bull trout on the permit. That request is still effective with regard to the Puget Sound/Coastal population of bull trout. On May 20, 1998, Plum Creek requested that the MCR steelhead be added to the permit. On August 7, 1998, Plum Creek also requested that Canada lynx be added to the permit. On December 15, 1998, Plum Creek requested that PuS chinook be added to their permit as well. While FWS has not yet made final listing decisions for the Puget Sound/Coastal population of bull trout or Canada lynx, it is proposing to respond to Plum Creek's request and determine if addition of these species to the permit is appropriate.

Implementation Agreement Provisions

The Implementation Agreement is a legal document describing the roles and responsibilities of the Services and Plum Creek during the permit period. Under the Implementation Agreement, plan species are those vertebrate species dependent on the various habitat types analyzed in the Plan. The Implementation Agreement specifies that should any of the plan species that were unlisted at the time of permit issuance subsequently become listed under the ESA, Plum Creek may request a permit amendment to have that species added to their permit.

Plum Creek received assurances, absent extraordinary circumstances (as defined in the Implementation Agreement), that plan species would be added to the permit without requiring additional mitigation from Plum Creek if the Services determined that such action would not appreciably reduce the likelihood of the survival and recovery of the affected species, or any other

species, in the wild and that adding the species to the permit would be consistent with the Services' other responsibilities.

To determine whether adding Canada lynx and bull trout to Plum Creek's permit and issuing a permit for steelhead and chinook would appreciably reduce the likelihood of the survival and recovery of those species, or any other species, the Services will follow the Section 7 process under the ESA. The Services will also determine whether the permit amendment meets each of the issuance criteria described in section 10(a)(2)(B) of the ESA and that a substantial and material adverse change in the status of Canada lynx, bull trout, steelhead, or chinook has not occurred since initial permit issuance.

Summary

At the time of initial permit issuance, the Services made a preliminary determination that the Plan adequately provided protection for lynx, bull trout, steelhead, and chinook. Based on that analysis, it appeared that the Plan would have minimal adverse impacts on lynx, bull trout, steelhead, and chinook.

With respect to lynx, use of edge habitat as a surrogate for ''classic'' lynx foraging habitat definitions, the Services predict a decrease in foraging habitat. Should lynx occur in the planning area, they would most likely use edges for foraging and would most likely rely on secondary prey items. The Plan is expected to maintain as conducive a landscape for lynx as is possible given the geographic province.

The Plan generally provides for improving conditions for bull trout, steelhead, and chinook. Buffers on fishbearing and other perennial streams are expected to provide for the natural processes and functions that steelhead and chinook rely on such as large woody debris inputs, detrital and litter input, root strength and bank stability. The Services expect to see reductions in delivery of fine sediment from roads and recovery of forest stand structures to improve hydrologic conditions, and reduce peak flows and mass-wasting risks.

Significant public comments and data were received by the Services on the proposals to list lynx, bull trout, steelhead, and chinook as threatened or endangered under the ESA. The Services are reviewing that information to determine if the Services' initial lynx, bull trout, steelhead, and chinook determinations for the Plum Creek permit remain valid.

The Environmental Impact Statement developed for the initial permit decision analyzed the effects that implementing the Plan would have on lynx, bull trout, steelhead, chinook, and other species. The effects of a proposed land exchange with the U.S. Forest Service and incorporation of that new land base into the Plan are also addressed in a Draft Supplemental Environmental Impact Statement, and will be further addressed in the Final Supplemental Environmental Impact Statement.

Dated: June 8, 1999.

Cynthia U. Barry,

Acting Regional Director, Region 1, U.S. Fish and Wildlife Service.

Dated: June 21, 1999.

Wanda L. Cain,

Chief, Endangered Species Division, Office of Protected Resources, National Marine Fisheries Service.

[FR Doc. 99–16206 Filed 6–24–99; 8:45 am]

BILLING CODE 3510–22–F and 4310-55-F

DEPARTMENT OF COMMERCE

National Oceanic and Atmospheric Administration

[Docket No. 990514132–9132–01; I.D. 032999A]

Taking and Importing of Marine Mammals; Italy as a Large-Scale High Seas Driftnet Nation

AGENCY: National Marine Fisheries Service (NMFS), National Oceanic and Atmospheric Administration (NOAA), Commerce.

ACTION: Identification of Italy as a Large-Scale High Seas Driftnet Nation.

SUMMARY: The U.S. Court of International Trade ordered the Secretary of Commerce to identify Italy as a country for which there is reason to believe its nationals or vessels conduct large-scale driftnet fishing beyond the exclusive economic zone of any nation. The Secretary did so on March 19, 1999. As a result, the President is required to enter into consultations with Italy within 30 days after the identification to obtain an agreement that will effect the immediate termination of high seas large-scale driftnetting by Italian vessels and nationals. If consultations with Italy are not satisfactorily concluded, the importation into the United States of fish, fish products, and sportfishing equipment from Italy will be prohibited under the High Seas Driftnet Fisheries Enforcement Act (HSDFEA). Further, the Secretary of the Treasury has been directed to deny entry of Italian large-scale driftnet vessels to U.S. ports and navigable waters. In addition, pursuant to the Dolphin Protection Consumer Information Act (DPCIA), the importation of certain fish and fish products into the United States from Italy is prohibited, unless Italy certifies that such fish and fish products were not caught with large-scale driftnets anywhere on the high seas. This action furthers the U.S. policy to support a United Nations moratorium on high seas driftnet fishing, in part because of the harmful effects that such driftnets have on marine mammals, including dolphins.

DATES: Effective March 19, 1999.

FOR FURTHER INFORMATION CONTACT: Cathy L. Eisele, Fishery Biologist; telephone: 301–713–2322, or fax: 301–713–4060; or Paul Niemeier, Foreign Affairs Specialist; telephone: 301–713–2276, or fax: 301–713–2313.

SUPPLEMENTARY INFORMATION:

The HSDFEA furthers the purposes of United Nations General Assembly Resolution 46/215, which called for a worldwide ban on large-scale high seas driftnet fishing beginning December 31, 1992. On March 5, 1999, the U.S. Court of International Trade ordered the Secretary of Commerce to identify Italy as a country for which there is reason to believe its nationals or vessels conduct large-scale driftnet fishing beyond the exclusive economic zone of any nation, pursuant to the HSDFEA (16 U.S.C. 1826a). On March 19, 1999, the Secretary notified the President that he had identified Italy as such a country. Italian officials were notified by the Department of State on March 22, 1999.

Pursuant to the HSDFEA, a chain of actions is triggered once the Secretary of Commerce notifies Italy that it has been identified as a large-scale high seas driftnet nation. If the consultations with Italy, described in the **SUMMARY,** are not satisfactorily concluded within 90 days, the President must direct the Secretary of the Treasury to prohibit the importation into the United States of fish, fish products, and sport fishing equipment from Italy. The Secretary of the Treasury is required to implement such prohibitions within 45 days of the President's direction.

If the above sanctions are insufficient to persuade Italy to cease large-scale high seas driftnet fishing within 6 months, or Italy retaliates against the United States during that time as a result of the sanctions, the Secretary of Commerce is required to certify this fact to the President. Such a certification is deemed to be a certification under section 8(a) of the Fishermen's Protective Act of 1967 (22 U.S.C. 1978(a), also known as the Pelly Amendment). This authorizes the President to restrict imports of ''any products from the offending country for

any duration'' to achieve compliance with the driftnet moratorium, so long as such action is consistent with U.S. obligations under the General Agreement on Tariffs and Trade.

The DPCIA (16 U.S.C. 1371(a)(2)(E)) requires that an exporting nation whose fishing vessels engage in high seas driftnet fishing provide documentary evidence that certain fish or fish products it wishes to export to the United States were not harvested with a large-scale driftnet on the high seas. Importers are being reminded that, as has been in effect since May 29, 1996 (61 FR 18722), all shipments from Italy containing fish and fish products specified in regulations at 50 CFR 216.24(e)(2) are subject to the importation requirements of the DPCIA. As required by 50 CFR 216.24(e)(2), the Fisheries Certificate of Origin (NOAA Form 370) must accompany all imported shipments of an item with a Harmonized Tariff Schedule number for fish harvested by or imported from a large-scale driftnet nation. As part of those requirements, an official of the Government of Italy must certify that any such import does not contain fish harvested with large-scale driftnets anywhere on the high seas.

Notwithstanding any other provision of law, no person is required to respond to, nor shall a person be subject to, a penalty for failure to comply with a collection of information subject to the requirements of the Paperwork Reduction Act unless that collection of information displays a currently valid OMB control number. The collection of information required by the Fisheries Certificate of Origin (NOAA Form 370) has been approved by the Office of Management and Budget (OMB) under OMB control number 0648–0040.

Dated: June 16, 1999.

Gary C. Matlock,

Director, Office of Sustainable Fisheries, National Marine Fisheries Service.

[FR Doc. 99–16205 Filed 6–24–99; 8:45 am]

BILLING CODE 3510–22–F

DEPARTMENT OF DEFENSE

Office of the Secretary

[Transmittal No. 99–06]

36(b)(1) Arms Sales Notification

AGENCY: Defense Security Cooperation Agency, Department of Defense (DOD).

ACTION: Notice.

SUMMARY: The Department of Defense is publishing the unclassified text of a section 36(b)(1) arms sales notification. This is published to fulfill the requirements of section 155 of P.L. 104–164 dated 21 July 1996.

FOR FURTHER INFORMATION CONTACT: Ms. J. Hurd, DSCA/COMPT/RM, (703) 604–6575.

The following is a copy of a letter to the Speaker of the House of Representatives, Transmittal 99–06, with attached transmittal, policy justification, Sensitivity of Technology, and Section 620C(d) of the Foreign Assistance Act of 1961.

Dated: June 21, 1999.

L.M. Bynum,

Alternate OSD Federal Register Liaison Officer, Department of Defense.

BILLING CODE 5001–10–M

DEFENSE SECURITY COOPERATION AGENCY

WASHINGTON, DC 20301-2800

11 JUN 1999
In reply refer to:
I-99/00480

Honorable J. Dennis Hastert
Speaker of the House of
Representatives
Washington, D.C. 20515-6501

Dear Mr. Speaker:

Pursuant to the reporting requirements of Section 36(b)(1) of the Arms Export Control Act, we are forwarding herewith Transmittal No. 99-06, concerning the Department of the Army's proposed Letter(s) of Offer and Acceptance (LOA) to Greece for defense articles and services estimated to cost $111 million. Soon after this letter is delivered to your office, we plan to notify the news media.

You will also find attached a certification as required by Section 620C(d) of the Foreign Assistance Act of 1961, as amended, that this action is consistent with Section 620C(b) of that statute.

Sincerely,

A.R. KELTZ
ACTING DIRECTOR

Attachments

Same ltr to: House Committee on International Relations
Senate Committee on Appropriations
Senate Committee on Foreign Relations
House Committee on National Security
Senate Committee on Armed Services
House Committee on Appropriations

Transmittal No. 99-06

Notice of Proposed Issuance of Letter of Offer
Pursuant to Section 36(b)(1)
of the Arms Export Control Act (U)

(i) **Prospective Purchaser: Greece**

(ii) **Total Estimated Value:**

Major Defense Equipment*	$ 80 million
Other	$ 31 million
TOTAL	$111 million

(iii) **Description of Articles or Services Offered:**
Four AH-64A APACHE attack helicopters, spare and repair parts, support equipment, M130 chaff dispenser, Integrated Helmet and Display Sight System, publications, personnel training and training equipment, U.S. Government and contractor engineering and technical services, Quality Assurance Team (QAT), and other related elements of logistics support.

(iv) **Military Department: Army (XIX)**

(v) **Sales Commission, Fee, etc., Paid, Offered, or Agreed to be Paid: None**

(vi) **Sensitivity of Technology Contained in the Defense Article or Defense Services Proposed to be Sold: See Annex attached.**

(vii) **Date Report Delivered to Congress: 11 JUN 1999**

* as defined in Section 47(6) of the Arms Export Control Act.

POLICY JUSTIFICATION

Greece - AH-64A APACHE Attack Helicopters

The Government of Greece has requested a possible sale of four AH-64A APACHE attack helicopters, spare and repair parts, support equipment, M130 chaff dispenser, Integrated Helmet and Display Sight System, publications, personnel training and training equipment, U.S. Government and contractor engineering and technical services, Quality Assurance Team (QAT), and other related elements of logistics support. The estimated cost is $111 million.

This proposed sale will contribute to the foreign policy and national security of the United States by improving the military capabilities of Greece and furthering NATO rationalization, standardization and interoperability.

This proposed sale will enable Greece to upgrade its anti-armor day/night missile capability, provide for the defense of vital installations and provide close air support for the military ground forces. The helicopters will be provided in accordance with, and subject to the limitation on use and transfer provided under the Arms Export Control Act, as embodied in the terms of sale. This sale will not adversely affect either the military balance in the region or U.S. efforts to encourage a negotiated settlement of the Cyprus question. Greece, which already has 20 AH-64A APACHE attack helicopters in its inventory, will have no difficulty absorbing these additional helicopters.

The proposed sale of this equipment and support will not affect the basic military balance in the region.

The principal contractors will be McDonnel Douglas Helicopter Systems, Mesa, Arizona; Lockheed-Martin Electronics and Missiles Group, Orlando, Florida; and General Electric, Lynn, Massachusetts. One or more proposed offset agreements may be related to this proposed sale.

Implementation of this proposed sale will require the assignment in-country of four U.S. Government Quality Assurance Team personnel for a period up to two weeks.

There will be no adverse impact on U.S. defense readiness as a result of this proposed sale.

Transmittal No. 99-06

Notice of Proposed Issuance of Letter of Offer
Pursuant to Section 36(b)(1)
of the Arms Export Control Act

Annex
Item No. vi

(vi) Sensitivity of Technology:

1. The AH-64A APACHE Attack Helicopter includes the following classified or sensitive components:

a. Chaff-flare Dispenser (M130) - a multi-purpose system which dispenses decoys to confuse threat radars and missile IR seekers. Radar cross section and frequency coverage are sensitive elements. Hardware is Unclassified. Technical publications for authorized maintenance levels are Unclassified. Aircraft optimization is the critical element; reverse engineering is not a major concern.

b. Infrared Countermeasure Set AN/ALQ-144A(V)3 - an active, continuous operating, omni-directional, electrically fired infrared jammer system designed to confuse or decoy threat IR missile systems, in conjunction with low reflective paint and engine suppressors. Hardware is classified Confidential. Technical manuals for authorized maintenance levels are classified Secret. Reverse engineering and development of counter-countermeasures are concerns if the hardware and releasable technical data were compromised.

c. Radar Warning Receiver AN/APR-39A(V)1 - provides warning of a radar directed air defense threat to permit appropriate countermeasures. Hardware is classified Confidential. Technical manuals for the maintenance levels are classified Confidential. Technical performance data are classified Secret. Aircraft optimization is the critical element. Reverse engineering is not a major concern.

d. Radar Jammer AN/ALQ-136(V)5 - an omni-directional radar jammer which provides protection against threat radar detecting devices. Equipment is programmed with appropriate threat data provided by purchasing country. Hardware is classified Confidential. Releasable technical manuals for the maintenance levels are classified Secret; releasable technical performance data is classified Secret. Technology involved in design, manufacturing and testing of the jammer is sensitive. Reverse engineering is a primary concern.

e. The Target Acquisition and Designation Sight/Pilot Night Vision Sensor (TADS/PNVS) system provides day, night, limited adverse weather target information, as well as night navigation capabilities. The PNVS provides thermal imaging that permits nap-of-the-earth flight to, from, and within the battle area, while TADS provides the co-pilot gunner with search, detection, recognition, and designation by means of Direct View Optics (DVO), television, and Forward Looking Infrared (FLIR) (without optical improvements) sighting systems that may be used singularly or in combinations. Hardware is Unclassified.

Technical manuals for authorized maintenance levels are Unclassified. Reverse engineering is not a major concern.

2. This sale is necessary in furtherance of the U.S. foreign policy and national security objectives outlined in the Policy Justification. Moreover, the benefits to be derived from this sale, as outlined in the Policy Justification, outweigh the potential damage that could result if the sensitive technology were revealed to unauthorized persons.

Certification Under § 620C(d) Of The Foreign Assistance Act of 1961, As Amended

Pursuant to § 620C(d) of the Foreign Assistance Act of 1961, as amended (the Act), Executive Order 12163 (Sec. 1-201(a)(13)) and the Secretary of State's memorandum of December 15, 1997, I hereby certify that the furnishing to Greece of four AH-64A attack helicopters, spare and repair parts, support equipment, M130 chaff dispenser, Integrated helmet and Display Sight System, publications, personnel training and training equipment, U.S. Government and contractor engineering and technical services, Quality Assurance Team (QAT), and other related elements of logistics support, at an estimated cost of $111 million, is consistent with the principles contained in § 620C(b) of the Act.

This certification will be made part of the notification to Congress under § 36(b) of the Arms Export Control Act regarding the proposed sale of the above-named articles and services and is based on the justification accompanying said notification, of which said justification constitutes a full explanation.

John D. Holum
Senior Adviser
for Arms Control and
International Security
Affairs

[FR Doc. 99–16178 Filed 6–24–99; 8:45 am]
BILLING CODE 5001–10–C

DEPARTMENT OF DEFENSE

Office of the Secretary

Meeting of the Senior Advisory Board on National Security

AGENCY: Department of Defense, Office of the Undersecretary of Defense (Policy).

ACTION: Notice of closed meeting.

SUMMARY: The Senior Advisory Board on National Security will meet in closed session on July 7–8, 1999. The Board was chartered by the Secretary of Defense on 1 July 1998 to conduct a comprehensive review of the early twenty-first century global security environment; develop appropriate national security objectives and a strategy to attain these objectives; and recommend concomitant changes to the national security apparatus as necessary.

The Senior Advisory Board will meet in this closed session to review its Phase One report. By Charter, the Phase One report is to be delivered to the Secretary of Defense on August 15, 1999. The report is based on classified material concerning U.S. domestic trends, global and regional trends, and possible conflict situations. The Board also plans to meet with former National Security Advisor and Secretary of State Henry Kissinger for part of the afternoon of 8 July.

In accordance with Section 10(d) of the Federal Advisory Committee Act, Public Law 92–463, as amended [5 U.S.C., Appendix II], it is anticipated that matters affecting national security, as covered by 5 U.S.C. 552b(c)(1)(1988), will be presented throughout the meeting, and that, accordingly, the meeting will be closed to the public.

DATES: Wednesday, 7 July 8:30 a.m.–5:00 p.m.; Thursday, 8 July 8:30 a.m.–4:00 p.m.

ADDRESSES: Marriott-Gateway, 1700 Jefferson Davis Hwy, Arlington, VA 22202.

FOR FURTHER INFORMATION: Contact Dr. Keith A. Dunn, National Security Study Group, Suite 532, Crystal Mall 3, 1931

Jefferson Davis Highway, Arlington, VA 22203–3805. Telephone 703–602–4175.

Dated: June 18, 1999.

L.M. Bynum,

Alternate OSD Federal Register Liaison Officer, Department of Defense.

[FR Doc. 99–16179 Filed 6–24–99; 8:45 am]

BILLING CODE 5000–10–M

DEPARTMENT OF DEFENSE

Office of the Secretary of Defense

Membership of the Defense Contract Audit Agency (DCAA) Performance Review Boards

AGENCY: Defense Contract Audit Agency, DoD.

ACTION: Notice of membership of the Defense Contract Audit Agency Performance Review Boards.

SUMMARY: This notice announces the appointment of the members of the Performance Review Boards (PRBs) of the Defense Contract Audit Agency (DCAA). The publication of PRB membership is required by U.S.C. 4314(c)(4). The Performance Review Boards provide fair and impartial review of Senior Executive Service (SES) performance appraisals and make recommendations to the Director, DCAA, regarding final performance ratings and performance awards for DCAA SES members.

EFFECTIVE DATE: June 25, 1999.

FOR FURTHER INFORMATION CONTACT:

Dale R. Collins, Chief, Human Resources Management, Defense Contract Audit Agency, Department of Defense, Ft. Belvoir, Virginia 22060–6219, 703–767–1236.

SUPPLEMENTARY INFORMATION: In accordance with 5 U.S.C. 4314(c)(4), the following are the names and titles of the executives who have been appointed to serve as members of the DCAA Performance Review Boards. They will serve one-year terms, effective upon publication of this notice.

Headquarters Performance Review Board

Mr. Larry Uhlfelder, Assistant Director, Policy and Plans, Defense Contract Audit Agency, Chairperson

Mr. Earl Newman, Assistant Director, Operations, Defense Contract Audit Agency member

Mr. Kirk Moberley, General Counsel, Defense Contract Audit Agency, member.

Regional Performance Review Board

Mr. David Dzivak, Regional Director, Northeastern, Defense Contract Audit Agency, Chairperson

Ms. Barbara Reilly, Regional Director, Mid-Atlantic, Defense Contract Audit Agency, member

Mr. William Serafine, Deputy Regional Director, Western, Defense Contract Audit Agency, member.

Dated: June 21, 1999.

L.M. Bynum,

Alternate OSD Federal Register Liaison Officer, Department of Defense.

[FR Doc. 99–16180 Filed 6–24–99; 8:45 am]

BILLING CODE 5000–10–M

DEPARTMENT OF EDUCATION

[CFDA No. 84.314B]

Even Start Statewide Family Literacy Initiative Grants

AGENCY: Department of Education

ACTION: Notice to extend deadline for applications for assistance under the Even Start Statewide Family Literacy Initiative grant authority, and information on cost issues involving those grants.

SUMMARY: The Secretary of Education announces an extension of the deadline for States to apply for a fiscal year (FY) 1999 new award under the Even Start Statewide Family Literacy Initiative grant authority. In addition, the Secretary will authorize certain pre-award costs for grant recipients, and consider State requests for waivers of the requirement that only non-Federal funds be used as matching resources for the grant under the waiver authority in section 14401 of the Elementary and Secondary Education Act (ESEA).

DATES: The new deadline for State offices and agencies to submit their Even Start Statewide Family Literacy Initiative applications for the second stage of this grant competition is October 15, 1999.

FOR FURTHER INFORMATION CONTACT: To obtain further information, contact Patricia McKee, Compensatory Education Programs, Office of Elementary and Secondary Education, U.S. Department of Education, 400 Maryland Avenue SW, Washington, DC 20202–6132; telephone (202) 260–0826; or e-mail address *patricia__*mckee@ed.gov.

Individuals who use a telecommunications device for the deaf (TDD) may call the Federal Information Relay Service (FIRS) at 1–800–877–8339.

Individuals with disabilities may obtain this document in an alternate format (e.g., Braille, large print, audiotape, or computer diskette) on request to the contact person listed in the preceding paragraph.

SUPPLEMENTARY INFORMATION: The Department published the FY 1999 application for Even Start Statewide Family Literacy Initiative competitive grants in the **Federal Register** on February 24, 1999 (64 FR 9229). The Department also published a notice of final priority for those grants on the same date (64 FR 9228). The application established an original deadline for transmittal of applications for the second stage of applications of August 20, 1999.

First, because of the need to prepare competitive grant applications for other Department programs, such as those under the Reading Excellence Act, some States have not been able to convene the consortium that is required to create the Statewide Initiative plan for the Even Start competitive grant application. In recognition of the competing demands on States, and in the interest of giving States sufficient planning time to prepare high-quality applications and to benefit from further technical assistance that the Department will provide, the Secretary extends the deadline for the second stage of applications for these grants to October 15, 1999.

Second, the Department's regulations already authorize grant recipients to incur allowable pre-award costs up to 90 calendar days before the grant award (34 CFR 75.263 and 74.25(e)(1)). In addition, for this competition, the Secretary will authorize grant recipients to use grant funds to pay certain pre-award costs incurred more than 90 days before the date of the grant award but no earlier than the date of the initial notice soliciting grant applications (February 24, 1999). Those authorized pre-award costs are the necessary and reasonable costs to establish, convene, and facilitate the required consortium's work in creating the plan for the proposed Statewide family literacy initiative. All pre-award costs are incurred at the recipient's risk. That is, the Secretary is under no obligation to reimburse these costs if for any reason the applicant does not receive an award or if the award is less than anticipated and inadequate to cover these costs.

Third, under this grant competition, a State that receives a grant for an Even Start Statewide Family Literacy Initiative must contribute an amount from non-Federal sources, in cash or in kind, at least equal to the Federal funds awarded under the grant. Drawing on

non-Federal contributions is important to building successful collaborative Statewide efforts to strengthen and expand family literacy services. However, identifying sufficient resources to meet this requirement may be difficult in some instances. In those cases, if the State educational agency (SEA) is the applicant State office or agency, the SEA may request from the Secretary a waiver under section 14401 of the ESEA of the requirement that only non-Federal funds may be used to match the Federal award. Such a waiver, if approved, would allow that State to use Federal resources (such as Head Start, Title I, Adult Education Act, Individuals with Disabilities Education Act, and Reading Excellence Act resources), in addition to non-Federal resources, to meet the matching requirement.

Any waiver request must meet the required criteria in section 14401 by, among other things, identifying how the waiver would contribute to improvements in teaching and learning. Applicants seeking a waiver of the requirement for non-Federal matching resources should include their waiver request with their application. To receive assistance concerning a waiver request, potential waiver applicants may call the Department's Waiver Assistance Line at (202) 401–7801 or 1–800–USA–LEARN, or the program contact above. Waiver guidance, including information about preparing a request, is also available in the Department's on-line library at http://www.ed.gov/flexibility.

Electronic Access to This Document

Anyone may view this document, as well as all other Department of Education documents published in the **Federal Register**, in text or portable document format (pdf) on the World Wide Web at either of the following sites:

http://ocfo.ed.gov/fedreg.htm

http://www.ed.gov/news.html

To use the pdf, you must have the Adobe Acrobat Reader Program, which is available free at either of the previous sites. If you have questions about using the pdf, call the U.S. Government Printing Office toll free at 1–888–293–6498.

Program Authority: 20 U.S.C. 6362(c).

Dated: June 22, 1999.

Judith Johnson,

Acting Assistant Secretary for Elementary and Secondary Education.

[FR Doc. 99–16196 Filed 6–24–99; 8:45 am]

BILLING CODE 4000–01–U

DEPARTMENT OF ENERGY

Idaho Operations Office; Notice of Availability of Solicitation for Awards of Financial Assistance

AGENCY: Idaho Operations Office, DOE.

ACTION: Notice of Availability of Solicitation Number DE–PS07–99ID13812—Boxed Waste Form Nondestructive Assay Development and Demonstration

SUMMARY: The U.S. Department of Energy (DOE), Idaho Operations Office, is seeking applications for cost-shared research, development and demonstration of innovative technologies which will enhance economic competitiveness, increase technical capability, and minimize resource expenditure associated with the characterization of radioactive material constituents in large volume (boxed) waste forms via nondestructive assay (NDA) techniques. Characterization shall include constituents entrained in both low level, alpha contaminated low-level, and transuranic contaminated boxed wastes. The proposed techniques must constitute an innovative system that accommodates the majority of waste forms residing in the inventory, including plutonium, uranium and fission products. The nondestructive assay technique must be able to quantify these radioactive material species in various mixtures over the spectrum of waste matrix configurations, e.g., high density matrices, heterogenous matrix compositions, etc. The three major phases include 1) design, 2) fabrication of the system and software development, and 3) testing and demonstration. The technology holder must cost share a minimum of 40% of the development phase of the project.

DATES: The deadline for receipt of applications is 2:00 p.m. Mountain Time July 22, 1999.

ADDRESSES: Applications should be submitted to: Trudy A. Thorne, Procurement Services Division, U.S. Department of Energy, Idaho Operations Office, 850 Energy Drive, Mail Stop 1221, Idaho Falls, Idaho 83401–1563.

FOR FURTHER INFORMATION CONTACT: Trudy Thorne, Contract Specialist at *Thorneta@id.doe.gov*, Dallas Hoffer, Contracting Officer at *hofferdl@id.doe.gov*, or Janet Surrusco at *surrusjk@id.doe.gov* (for questions related to accessing the solicitation).

SUPPLEMENTARY INFORMATION: The solicitation was issued pursuant to 10 CFR 600.6(b). DOE anticipates awarding a cooperative agreement with a project period of two years. The awardee is required to provide a minimum of 40% cost share on the development phase of the project.

The statutory authority for this program is Public Law 95–91 and Public Law 105–245. The issuance date of Solicitation No. DE–PS07–99ID13812 is on or about June 21, 1999. The solicitation is available in full text via the Internet at the following address: *http://www.id.doe.gov/doeid/PSD/proc-div.html.* Technical and non-technical questions should be submitted in writing to Trudy Thorne by e-mail *thorneta@id.doe.gov*, or facsimile at 208–526–5548 no later than July 7, 1999.

Issued in Idaho Falls on June 17, 1999.

Michael L. Adams,

Acting Director, Procurement Services Division.

[FR Doc. 99–16207 Filed 6–24–99; 8:45 am]

BILLING CODE 6450–01–P

DEPARTMENT OF ENERGY

Office of Fossil Energy; ANP Blackstone Energy Company, Notice of Filing of Coal Capability Powerplant and Industrial Fuel Use Act

[Docket No. FE C&E 99–11—Certification Notice—174]

AGENCY: Office of Fossil Energy, Department of Energy.

ACTION: Notice of filing

SUMMARY: ANP Blackstone Energy Company has submitted a coal capability self-certification pursuant to section 201 of the Powerplant and Industrial Fuel Use Act of 1978, as amended.

ADDRESSES: Copies of self-certification filings are available for public inspection, upon request, in the Office of Fuels Programs, Fossil Energy, Room 3F–056, FE–52, Forrestal Building, 1000 Independence Avenue, S.W., Washington, D.C. 20585.

FOR FURTHER INFORMATION CONTACT: Ellen Russell at (202) 586–9624.

SUPPLEMENTARY INFORMATION: Title II of the Powerplant and Industrial Fuel Use Act of 1978 (FUA), as amended (42 U.S.C. 8301 *et seq.*), provides that no new baseload electric powerplant may be constructed or operated without the capability to use coal or another alternate fuel as a primary energy source. In order to meet the requirement of coal capability, the owner or operator of such facilities proposing to use natural gas or petroleum as its primary energy source shall certify, pursuant to FUA section 201(d), to the Secretary of

Energy prior to construction, or prior to operation as a base load powerplant, that such powerplant has the capability to use coal or another alternate fuel. Such certification establishes compliance with section 201(a) on the day it is filed with the Secretary. The Secretary is required to publish a notice in the **Federal Register** that a certification has been filed. The following owner/operator of proposed new baseload powerplant has filed a self-certification in acccordance with section 201(d).

Owner & Operator: ANP Blackstone Energy Company.

Location: Blackstone, MA.

Plant Configuration: Combined-cycle.

Capacity: 580 megawatts.

Fuel: Natural gas.

Purchasing Utilities: Wholesale purchasers in New England.

Expected In-Service Date: 2nd quarter, 2001.

Issued in Washington, D.C., June 21, 1999.

Anthony J. Como,

Deputy Director, Electric Power Regulation, Office of Coal & Power Im/Ex, Office of Coal & Power Systems, Office of Fossil Energy.

[FR Doc. 99–16208 Filed 6–24–99; 8:45 am]

BILLING CODE 6450–01–P

DEPARTMENT OF ENERGY

Federal Energy Regulatory Commission

[Docket No. ER99–3301–000]

California Independent System Operator Corporation; Notice of Filing

June 21, 1999.

Take notice that on June 18, 1999, the California Independent System Operator Corporation (ISO), tendered for filing a proposed amendment (Amendment No. 18) to the ISO Tariff and a request for waiver of the 60-day prior notice requirement. Amendment No. 18 would modify the Tariff to address flaws in the current market rules for managing Intra-Zonal Congestion in real-time.

The ISO requests that Amendment No. 18 be made effective as of June 20, 1999 and that the Commission take expedited action with request to Amendment No. 18.

The ISO states that this filing has been served upon the Public Utilities Commission of California, the California Energy Commission, the California Electricity Oversight Board, and all parties with effective Scheduling Coordinator Service Agreements under the ISO Tariff.

Any person desiring to be heard or to protest such filing should file a motion to intervene or protest with the Federal Energy Regulatory Commission, 888 First Street, N.E., Washington, D.C. 20426, in accordance with Rules 211 and 214 of the Commission's Rules of Practice and Procedure (18 CFR 385.211 and 385.214). All such motions and protests should be filed on or before July 1, 1999. Protests will be considered by the Commission to determine the appropriate action to be taken, but will not serve to make protestants parties to the proceedings. Any person wishing to become a party must file a motion to intervene. Copies of this filing are on file with the Commission and are available for public inspection. This filing may also be viewed on the Internet at http://www/ferc.fed.us/online/rims.htm (call 202–208–2222 for assistance).

David P. Boergers,

Secretary.

[FR Doc. 99–16221 Filed 6–24–99; 8:45 am]

BILLING CODE 6717–01–M

DEPARTMENT OF ENERGY

Federal Energy Regulatory Commission

[Docket Nos. ER99–2300–000, ER99–2541–000, ER99–2602–000, ER99–2769–000, ER99–2858–000, and ER99–2895–000, (Not consolidated)]

Cleco Trading & Marketing LLC, Carthage Energy, LLC, LSP-Kendall Energy, LLC, Foote Creek III, LLC, MEP Pleasant Hill, LLC, and Amoco Energy Trading Corporation; Notice of Issuance of Order

June 21, 1999.

Cleco Trading & Marketing LLC, Carthage Energy, LLC, LSP-Kendall Energy LLC, Foote Creek III, LLC, MEP Pleasant Hill, LLC, and Amoco Energy Trading Corporation (hereafter, ''the Applicants'') filed with the Commission rate schedules in the above-captioned proceedings, respectively, under which the Applicants will engage in wholesale electric power and energy transactions at market-based rates, and for certain waivers and authorizations. In particular, certain of the Applicants may also have requested in their respective applications that the Commission grant blanket approval under 18 CFR Part 34 of all future issuances of securities and assumptions of liabilities by the Applicants. On June 17, 1999, the Commission issued an order that accepted the rate schedules for sales of capacity and energy at market-based rates (Order), in the above-docketed proceedings.

The Commission's June 17, 1999 Order granted, for those Applicants that sought such approval, their request for blanket approval under Part 34, subject to the conditions found in Appendix B in Ordering Paragraphs (2), (3), and (5):

(2) Within 30 days of the date of this order, any person desiring to be heard or to protest the Commission's blanket approval of issuances of securities or assumptions of liabilities by the Applicants should file a motion to intervene or protest with the Federal Energy Regulatory Commission, 888 First Street, NE., Washington, DC 20426, in accordance with Rules 211 and 214 of the Commission's Rules of Practice and Procedure, 18 CFR 385.211 and 385.214.

(3) Absent a request to be heard within the period set forth in Ordering Paragraph (2) above, if the Applicants have requested such authorization, the Applicants are hereby authorized to issue securities and assume obligations and liabilities as guarantor, indorser, surety or otherwise in respect of any security of another person; provided that such issue or assumption is for some lawful object within the corporate purposes of the Applicants, compatible with the public interest, and reasonably necessary or appropriate for such purposes.

(5) The Commission reserves the right to modify this order to require a further showing that neither public nor private interests will be adversely affected by continued Commission approval of the Applicants' issuances of securities or assumptions of liabilities * * *.

Notice is hereby given that the deadline for filing motions to intervene or protests, as set forth above, is July 19, 1999.

Copies of the full text of the Order are available from the Commission's Public Reference Branch, 888 First Street, NE., Washington, DC 20426.

David P. Boergers,

Secretary.

[FR Doc. 99–16217 Filed 6–24–99; 8:45 am]

BILLING CODE 6717–01–M

DEPARTMENT OF ENERGY

Federal Energy Regulatory Commission

[Docket No. ER99–3262–000]

Consolidated Edison Company of New York, Inc; Notice of Filing

June 21, 1999.

Take notice that June 16, 1999, Consolidated Edison Company of New York, Inc. (Con Edison), tendered for filing a Supplement to Con Edison Rate

Schedule FERC No. 112, for transmission service for New York State Electric & Gas Corporation (NYSEG).

Con Edison has requested a waiver so that the supplement can be effective as of April, 1999, consistent with the terms of Rate Schedule 112.

Con Edison states that a copy of this filing has been served by mail upon NYSEG.

Any person desiring to be heard or to protest such filing should file a motion to intervene or protest with the Federal Energy Regulatory Commission, 888 First Street, N.E., Washington, D.C. 20426, in accordance with Rules 211 and 214 of the Commission's Rules of Practice and Procedure (18 CFR 385.211 and 385.214). All such motions and protests should be filed on or before July 6, 1999. Protests will be considered by the Commission to determine the appropriate action to be taken, but will not serve to make protestants parties to the proceedings. Any person wishing to become a party must file a motion to intervene. Copies of this filing are on file with the Commission and are available for public inspection. This filing may also be viewed on the Internet at http://www.ferc.fed.us/online/rims.htm (call 202–208–2222 for assistance.)

David P. Boergers,

Secretary.

[FR Doc. 99–16219 Filed 6–24–99; 8:45 am]

BILLING CODE 6717–01–M

DEPARTMENT OF ENERGY

Federal Energy Regulatory Commission

[Docket No. ER99–2915–000]

Indeck-Olean Limited Partnership; Notice of Issuance of Order

June 21, 1999.

Indeck-Olean Limited Partnership (Indeck-Olean), a Delaware limited partnership, created for the purpose of owning an 80 MW cogeneration facility located in Olean, New York (hereafter, Indeck-Olean) filed a proposed rate schedule that would allow it to make sales of power at market-based rates, and for certain waivers and authorizations. In particular, Indeck-Olean requested that the Commission grant blanket approval under 18 CFR Part 34 of all future issuances of securities and assumptions of liabilities by Indeck-Olean. On June 17, 1999, the commission issued an Order Accepting For Filing Proposed Rate Schedule for Sales Of Capacity, Energy And Ancillary Services At Market-Based Rates (Order), in the above-docketed proceeding.

The Commission's June 17, 1999 Order granted the request for blanket approval under Part 34, subject to the conditions found in Ordering Paragraphs (D), (E), and (G):

(D) Within 30 days of the date of this order, any person desiring to be heard or to protest the Commission's blanket approval of issuances of securities or assumptions of liabilities by Indeck-Olean should file a motion to intervene or protest with the Federal Energy Regulatory Commission, 888 First Street, N.E., Wahsington, D.C. 20426, in accordance with Rules 211 and 214 of the Commission's Rules of Practice and Procedure, 18 CFR 385.211 and 385.214.

(E) Absent a request to be heard within the period set forth in Ordering Paragraph (D) above, Indeck-Olean is hereby authorized to issue securities and assume obligations and liabilities as guarantor, indorser, surety or otherwise in respect to any security of another person; provided that such issue or assumption is for some lawful object within the corporate purposes of Indeck-Olean, compatible with the public interest, and reasonably necessary or appropriate for such purposes.

(G) The Commission reserves the right to modify this order to require a further showing that neither public or private interests will be adversely affected by continued Commission approval of Indeck-Olean's issuances of securities or assumptions of liabilities * * *.

Notice is hereby given that the deadline for filing motions to intervene or protests, as set forth above, is July 19, 1999.

Copies of the full text of the Order are available from the Commission's Public Reference Branch, 888 First Street, NE., Washington, DC 20426.

David P. Boergers,

Secretary.

[FR Doc. 99–16218 Filed 6–24–99; 8:45 am]

BILLING CODE 6717–01–M

DEPARTMENT OF ENERGY

Federal Energy Regulatory Commission

[Docket No. EL99–72–000]

Indiana Municipal Power Agency Complainant, vs. American Electric Power Service Corporation Respondent. Notice of Filing

June 21, 1999.

Take notice that on July 18, 1999, Indiana Municipal Power Agency (IMPA) filed a complaint against American Electric Power Service Corporation (AEP), alleging that AEP's transmission rates and revenue requirements are unjust and unreasonable because historical costs have changed dramatically and AEP's revenues from use of its transmission system by third parties and by AEP for off-system sales have substantially increased.

Any person desiring to be heard or to protest such filing should file a motion to intervene or protest with the Federal Energy Regulatory Commission, 888 First Street, NE, Washington, DC 20426, in accordance with Rules 211 and 214 of the Commission's Rules of Practice and Procedure (18 CFR 385.211 and 385.214). All such motions and protests should be filed on or before July 8, 1999. Protests will considered by the Commission to determine the appropriate action to be taken, but will not serve to make protestants parties to the proceedings. Any person wishing to become a party must file a motion to intervene. Copies of this filing are on file with the Commission and are available for public inspection. This filing may also be viewed on the Internet at http://www.ferc.fed.us/online/rims.htm (call 202–208–2222 for assistance). Answers to the complaint shall also be due on or before July 8, 1999.

David P. Boergers,

Secretary.

[FR Doc. 99–16220 Filed 6–24–99; 8:45 am]

BILLING CODE 6717–01–M

DEPARTMENT OF ENERGY

Federal Energy Regulatory Commission

[Docket Nos. EC99–34–000 and ER99–1764–000]

Niagara Mohawk Power Corporation and Erie Boulevard Hydropower, L.P.; Notice of Issuance of Order

June 21, 1999.

Niagara Mohawk Power Corporation (Niagara Mohawk) and Erie Boulevard Hydropower, L.P. (Erie Boulevard) filed a joint application pursuant to section 203 of the Federal Power Act requesting Commission authorization for Niagara Mohawk to sell, and for Erie Boulevard to purchase, certain jurisdictional transmission facilities. Erie Boulevard is a limited partnership formed for the purpose of purchasing, owning and operating the hydroelectric generating plants it is purchasing from Niagara Mohawk. Erie Boulevard also requested market-based rate authority, and certain waivers and authorizations. In particular, Erie Boulevard requested that the Commission grant blanket approval

under 18 CFR Part 34 of all future issuances of securities and assumptions of liabilities by Erie Boulevard. On June 17, 1999, the Commission issued an Order Approving Disposition Of Jurisdictional Facilities, Granting Waiver Of Notice, Denying Motions For Stay, Accepting Answer, Conditionally Accepting For Filing Tariff For Market-Based Power Sales and Interconnection Agreement And Granting Request For Confidential Treatment (Order), in the above-docketed proceedings.

The Commission's June 17, 1999 Order granted the request for blanket approval under Part 34, subject to the conditions found in Ordering Paragraphs (M), (N), and (P):

(M) Within 30 days of the date of this order, any person desiring to be heard or to protest the Commission's blanket approval of issuances of securities or assumptions of liabilities by Erie Boulevard Energy Regulatory Commission, 888 First Street, N.E., Washington, D.C. 20426, in accordance with Rules 211 and 214 of the Commission's Rules of Practice and Procedure, 18 CFR 385.211 and 385.214.

(N) Absent a request to be heard within the period set forth in Ordering Paragraph (M) above, Erie Boulevard is hereby authorized to issue securities and assume obligations and liabilities as guarantor, indorser, surety or otherwise in respect of any security of another person; provided that such issue or assumption is for some lawful object within the corporate purposes of Erie Boulevard, compatible with the public interest, and reasonably necessary or appropriate for such purposes.

(P) The Commission reserves the right to modify this order to require a further showing that neither public nor private interests will be adversely affected by continued Commission approval of Erie Boulevard's issuances of securities or assumptions of liabilities * * *.

Notice is hereby given that the deadline for filing motions to intervene or protests, as set forth above, is July 19, 1999.

Copies of the full text of the Order are available from the Commission's Public Reference Branch, 888 First Street, N.E., Washington, D.C. 20426.

David P. Boergers,

Secretary.

[FR Doc. 99–16222 Filed 6–24–99; 8:45 am]

BILLING CODE 6717–01–M

DEPARTMENT OF ENERGY

Federal Energy Regulatory Commission

[Docket No. EG99–146–000, et al.]

Phelps Dodge Energy Services, LLC, et al.; Electric Rate and Corporate Regulation Filings

June 17, 1999.

Take notice that the following filings have been made with the Commission:

1. Phelps Dodge Energy Services, LLC

[Docket No. EG99–146–000]

Take notice that on June 10, 1999, Phelps Dodge Energy Services, LLC (PDES) filed with the Federal Energy Regulatory Commission an amendment to its Application for Determination of Exempt Wholesale Generator Status pursuant to part 365 of the Commission's regulations filed with the Commission on May 13, 1999.

The amendment was filed to clarify that PDES will not sell scheduling and dispatching services. Instead, PDES will assist potential customers in arranging for transmission services from utilities (including necessary ancillary services such as scheduling and dispatching) in order to sell power from PDES' facilities or power that PDES obtained from other resources.

Comment date: July 8, 1999, in accordance with Standard Paragraph E at the end of this notice. The Commission will limit its consideration of comments to those that concern the adequacy or accuracy of the application.

2. Bell/Harbert Energy, L.L.C.

[Docket No. EG99–169–000]

Take notice that on June 14, 1999, Bell/Harbert Energy, L.L.C.., 1340 Lexington Avenue, Rochester, New York 14606, filed with the Federal Energy Regulatory Commission an application for determination of exempt wholesale generator status pursuant to part 365 of the Commission's Regulations.

Bell/Harbert Energy, L.L.C. will lease a 60 MW gas fired combined-cycle generating facility located in Hume, Allegheny County, New York from Rochester Gas and Electric Corporation. Bell-Harbert Energy, L.L.C. will be engaged directly and exclusively in the business of owning or operating all or part of an eligible facility (as defined in section 32(a)(1) of the Public Utility Holding Company Act of 1935) and selling electricity at wholesale.

Comment date: July 8, 1999, in accordance with Standard Paragraph E at the end of this notice. The Commission will limit its consideration of comments to those that concern the adequacy or accuracy of the application.

3. Williams Energy Marketing & Trading Company; Strategic Energy L.L.C.; and SCANA Energy Marketing, Inc.

[Docket Nos. ER95–305–020; ER96–3107–009 and ER96–3107–010; and ER96–1086–012]

Take notice that on June 14, 1999, the above-mentioned power marketers filed quarterly reports with the Commission in the above-mentioned proceedings for information only. These filings are available for public inspection and copying in the Public Reference Room or on the web at www.ferc.fed.us/online/rims.htm for viewing and downloading (call 202–208–2222 for assistance).

4. Interstate Power Company

[Docket Nos. ER96–1208–003; ER96–1208–002; and OA96–213–000]

Take notice that on June 11 , 1999, the Interstate Power Company tendered for filing a Refund Report in response to the Commission's Letter Order dated April 29, 1999 in the above named dockets.

A copy of this filing has been served upon all affected customers, the Illinois Commerce Commission, the Iowa Utilities Board, the Minnesota Public Utilities Commission and the Public Service Commission of Wisconsin.

Comment date: July 1, 1999, in accordance with Standard Paragraph E at the end of this notice.

5. Mid-Power Services Corp.

[Docket No. ER97–4257–009]

Take notice that on June 10, 1999, the above-mentioned power marketer filed a quarterly report with the Commission in the above-mentioned proceeding for information only. This filing is available for public inspection and copying in the Public Reference Room or on the web at www.ferc.fed.us/online/rims.htm for viewing and downloading (call 202–208–2222 for assistance).

6. Alpha Energy Corporation

[Docket No. ER97–4730–004]

Take notice that on June 11, 1999, the above-mentioned power marketer filed a quarterly report with the Commission in the above-mentioned proceeding for information only. This filing is available for public inspection and copying in the Public Reference Room or on the web at www.ferc.fed.us/online/rims.htm for viewing and downloading (call 202–208–2222 for assistance).

7. Kansas City Power & Light Company

[Docket No. ER99–2202–000]

Take notice that on June 14, 1999, Kansas City Power & Light Company

(KCPL), tendered for filing amendments to its filings in this docket for a Service Agreement dated March 2, 1999 by KCPL. The amendment provides additional information regarding ancillary services on the Specifications for Firm Point-To-Point Transmission Service.

Comment date: July 2, 1999, in accordance with Standard Paragraph E at the end of this notice.

8. Sierra Pacific Power Company; Sierra Pacific Power Company and Nevada Power Company

[Docket No. ER99–2339–001; Docket No. ER99–34–002 (Not Consolidated)]

Take notice that on June 14, 1999, Sierra Pacific Power Company (Sierra Pacific), tendered its compliance filing in accordance with the Commission's May 28, 1999 order in the above-captioned dockets.

Comment date: July 2, 1999, in accordance with Standard Paragraph E at the end of this notice.

9. KeySpan-Ravenswood, Inc.

[Docket No. ER99–3209–000]

Take notice that on June 10, 1999, KeySpan-Ravenswood, Inc. (KeySpan-Ravenswood) filed an informational filing with the Federal Energy Regulatory Commission under Rate Schedule 1, an Energy Service Agreement dated as of June 9, 1999, between KeySpan-Ravenswood and KeySpan-Ravenswood Services Corp. (KRSC).

Comment date: June 30, 1999, in accordance with Standard Paragraph E at the end of this notice.

10. American Electric Power Service Corporation

[Docket No. ER99–3210–000]

Take notice that on June 11, 1999, the American Electric Power Service Corporation (AEPSC), tendered for filing blanket service agreements by the AEP Companies under the Wholesale Market Tariff of the AEP Operating Companies (Power Sales Tariff) and letters of assignment under the Power Sales Tariff. The Power Sales Tariff was accepted for filing effective October 10, 1997 and has been designated AEP Operating Companies' FERC Electric Tariff Original Volume No. 5.

AEPSC respectfully requests waiver of notice to permit the service agreements and assignments to be made effective as specified in the submittal letter to the Commission with this filing.

A copy of the filing was served upon the Parties and the State Utility Regulatory Commissions of Indiana, Kentucky, Michigan, Ohio, Tennessee, Virginia and West Virginia.

Comment date: July 1, 1999, in accordance with Standard Paragraph E at the end of this notice.

11. Ameren Corporation

[Docket No. ER99–3211–000]

Take notice that on June 11, 1999, Ameren Corporation tendered for filing notice that effective January 1, 1998, Service Agreement FERC No. T3–139, dated June 6, 1997, between Union Electric Company (UE) and Vastar Power Marketing, Inc. (VPM), now Southern Company Energy Marketing, Inc., in Docket No. ER97–3301–000 filed with the Federal Energy Regulatory Commission by Union Electric Company is to be canceled.

Notice of the proposed cancellation has been served upon Southern Company Energy Marketing, Inc., for Vastar Power Marketing, Inc.

Comment date: July 1, 1999, in accordance with Standard Paragraph E at the end of this notice.

12. Consolidated Edison Company of New York, Inc.

[Docket No. ER99–3212–000]

Take notice that on June 11, 1999, Consolidated Edison Company of New York, Inc. (Con Edison), tendered for filing a Supplement to its Rate Schedule FERC No. 78, an agreement to provide transmission service for the Power Authority of the State of New York (the Authority). The Supplement provides for a decrease in the annual revenues under the Rate Schedule of $12,389.00.

Con Edison has requested that the increase take effect on July 1, 1999.

Con Edison states that a copy of this filing has been served by mail upon the Authority.

Comment date: July 1, 1999, in accordance with Standard Paragraph E at the end of this notice.

13. Consolidated Edison Company of New York, Inc.

[Docket No. ER99–3213–000]

Take notice that on June 11, 1999, Consolidated Edison Company of New York, Inc. (Con Edison), tendered for filing a Supplement to Con Edison Rate Schedule FERC No. 94 for transmission service for the Long Island Power Authority (LIPA). The Rate Schedule provides for transmission of power and energy from the New York Power Authority's Blenheim-Gilboa station. The Supplement provides for a decrease in annual revenues under the Rate Schedule.

Con Edison has requested that this increase take effect on July 1, 1999.

Con Edison states that a copy of this filing has been served by mail upon LIPA.

Comment date: July 1, 1999, in accordance with Standard Paragraph E at the end of this notice.

14. Consolidated Edison Company of New York, Inc.

[Docket No. ER99–3214–000]

Take notice that on June 11, 1999, Consolidated Edison Company of New York, Inc. (Con Edison), tendered for filing a Supplement to its Rate Schedule FERC No. 102, an agreement to provide transmission service for the New York Power Authority (the Authority). The Supplement provides for a decrease in the annual revenues under the Rate Schedule of $33,348.90.

Con Edison has requested that the increase take effect on July 1, 1999.

Con Edison states that a copy of this filing has been served by mail upon the Authority.

Comment date: July 1, 1999, in accordance with Standard Paragraph E at the end of this notice.

15. Wisconsin Public Service Corporation

[Docket No. ER99–3215–000]

Take notice that on June 11, 1999, Wisconsin Public Service Corporation (WPSC), tendered for filing Supplement No. 2, to its partial requirements service agreement with Upper Peninsula Power Company (UPPCO). Supplement No. 2, provides UPPCO's contract demand nominations for January 2000—December 2000, under WPSC's W–2A partial requirements tariff and UPPCO's applicable service agreement.

The company states that copies of this filing have been served upon UPPCO and to the State Commissions where WPSC serves at retail.

Comment date: July 1, 1999, in accordance with Standard Paragraph E at the end of this notice.

16. Wisconsin Public Service Corporation

[Docket No. ER99–3216–000]

Take notice that on June 11, 1999, Wisconsin Public Service Corporation (WPSC), tendered for filing executed Service Agreements with DukeSolutions, Inc., providing for transmission service under FERC Electric Tariff, Volume No. 1.

WPSC requests that the agreements be accepted for filing and made effective on May 18, 1999.

Comment date: July 1, 1999, in accordance with Standard Paragraph E at the end of this notice.

17. Long Sault, Inc.

[Docket No. ER99–3218–000]

Take notice that on June 11, 1999, Long Sault, Inc. (Long Sault), tendered

for filing a Second Revised Tariff Sheet No. 119, to its open access transmission tariff to accurately reflect the settlement rates approved in Docket No. OA96–11–000 on March 13, 1997 and Long Sault's Long Sault's Order No. 888–A compliance filing approved January 19, 1999 in Docket No. OA97–624–000.

Long Sault states that it has served copies of the compliance filing on the New York Public Service Commission and on Long Sault's present transmission customers (who take service under other transmission agreements).

Comment date: July 1, 1999, in accordance with Standard Paragraph E at the end of this notice.

18. Alpha Energy Corporation

[Docket No. ER99–3219–000]

Take notice that on June 11, 1999, Alpha Energy Corporation tendered for filing notice that effective August 13, 1999, the Rate Schedule under Docket No. ER97–4730–001, effective January 20, 1998, and filed with the Federal Energy Regulatory Commission by Alpha Energy Corporation is to be canceled.

Comment date: July 1, 1999, in accordance with Standard Paragraph E at the end of this notice.

19. Delmarva Power & Light Company

[Docket No. ER99–3220–000]

Take notice that on June 11, 1999, Delmarva Power & Light Company (Delmarva), tendered for filing an executed umbrella service agreement with Orange and Rockland Utilities, Inc., under Delmarva's market rate sales tariff.

Delmarva requests an effective date of June 11, 1999.

Comment date: July 1, 1999, in accordance with Standard Paragraph E at the end of this notice.

20. Consumers Energy Company

[Docket No. ER99–3221–000]

Take notice that on June 11, 1999, Consumers Energy Company (Consumers), tendered for filing an executed transmission service agreement with Thumb Electric Cooperative (Customer) pursuant to the Joint Open Access Transmission Service Tariff filed on December 31, 1996 by Consumers and The Detroit Edison Company (Detroit Edison).

The agreement has an effective date of May 14, 1999.

Copies of the filed agreement were served upon the Michigan Public Service Commission, Detroit Edison, and the Customer.

Comment date: July 1, 1999, in accordance with Standard Paragraph E at the end of this notice.

21. Niagara Mohawk Power Corporation

[Docket No. ER99–3222–000]

Take notice that on June 14, 1999, Niagara Mohawk Power Corporation (NMPC), tendered for filing with the Federal Energy Regulatory Commission executed a form Service Agreement between NMPC and PP&L EnergyPlus Co., (Purchaser). The Service Agreement specifies that the Purchaser has signed on to and has agreed to the terms and conditions of NMPC's Power Sales Tariff designated as NMPC's FERC Electric Tariff, Original Volume No. 2. This Tariff, approved by FERC on April 15, 1994, and which has an effective date of March 13, 1993, will allow NMPC and the Purchaser to enter into separately scheduled transactions under which NMPC will sell to the Purchaser capacity and/or energy as the parties may mutually agree.

In its filing letter, NMPC also included a Certificate of Concurrence for the Purchaser.

NMPC is: (a) Generally requesting an effective date of May 5, 1999 for the agreement, and (b) requesting waiver of the Commission's notice requirements for good cause shown.

NMPC has served copies of the filing upon the New York State Public Service Commission, and the companies included in a Service List enclosed with the filing.

Comment date: July 2, 1999, in accordance with Standard Paragraph E at the end of this notice.

22. Delmarva Power & Light Company

[Docket No. ER99–3223–000]

Take notice that on June 14, 1999, Delmarva Power & Light Company (Delmarva), tendered for filing an executed umbrella service agreement with Old Dominion Electric Cooperative under Delmarva's market rate sales tariff.

Delmarva requests an effective date of June 14, 1999.

Comment date: July 2, 1999, in accordance with Standard Paragraph E at the end of this notice.

23. Delmarva Power & Light Company

[Docket No. ER99–3224–000]

Take notice that on June 14, 1999, Delmarva Power & Light Company (Delmarva), tendered for filing an executed umbrella service agreement with Southern Indiana Gas and Electric Company under Delmarva's market rate sales tariff.

Delmarva requests an effective date of June 14, 1999.

Comment date: July 2, 1999, in accordance with Standard Paragraph E at the end of this notice.

24. Illinois Power Company

[Docket No. ER99–3225–000]

Take notice that on June 14, 1999, Illinois Power Company (Illinois Power), 500 South 27th Street, Decatur, Illinois 62526, tendered for filing a Power Sales Tariff, Service Agreement under which Arkansas Electric Cooperative will take service under Illinois Power Company's Power Sales Tariff. The agreements are based on the Form of Service Agreement in Illinois Power's tariff.

Illinois Power has requested an effective date of May 24, 1999.

Comment date: July 2, 1999, in accordance with Standard Paragraph E at the end of this notice.

25. PECO Energy Company

[Docket No. ER99–3226–000]

Take notice that on June 14, 1999, PECO Energy Company (PECO), tendered for filing a Service Agreement dated May 5, 1999 with Borough of Madison, New Jersey (MADISON) under PECO's FERC Electric Tariff Original Volume No. 1 (Tariff). The Service Agreement adds MADISON as a customer under the Tariff.

PECO requests an effective date of May 5, 1999, for the Service Agreement.

PECO states that copies of this filing have been supplied to MADISON and to the Pennsylvania Public Utility Commission.

Comment date: July 2, 1999, in accordance with Standard Paragraph E at the end of this notice.

26. PECO Energy Company

[Docket No. ER99–3227–000]

Take notice that on June 14, 1999, PECO Energy Company (PECO), tendered for filing a Service Agreement dated May 5, 1999 with Borough of Pemberton, New Jersey (PEMBERTON) under PECO's FERC Electric Tariff Original Volume No. 1 (Tariff). The Service Agreement adds PEMBERTON as a customer under the Tariff.

PECO requests an effective date of May 5, 1999, for the Service Agreement.

PECO states that copies of this filing have been supplied to PEMBERTON and to the Pennsylvania Public Utility Commission.

Comment date: July 2, 1999, in accordance with Standard Paragraph E at the end of this notice.

27. PECO Energy Company

[Docket No. ER99–3228–000]

Take notice that on June 14, 1999, PECO Energy Company (PECO), tendered for filing a Service Agreement dated May 12, 1999 with Borough of Lavallette, New Jersey (LAVALLETTE) under PECO's FERC Electric Tariff Original Volume No. 1 (Tariff). The Service Agreement adds LAVALLETTE as a customer under the Tariff.

PECO requests an effective date of May 12, 1999, for the Service Agreement.

PECO states that copies of this filing have been supplied to LAVALLETTE and to the Pennsylvania Public Utility Commission.

Comment date: July 2, 1999, in accordance with Standard Paragraph E at the end of this notice.

28. PECO Energy Company

[Docket No. ER99–3229–000]

Take notice that on June 14, 1999, PECO Energy Company (PECO) tendered for filing a Service Agreement dated May 5, 1999 with Borough of Seaside Heights, New Jersey (Seaside Heights) under PECO's FERC Electric Tariff Original Volume No. 1 (Tariff). The Service Agreement adds Seaside Heights as a customer under the Tariff.

PECO requests an effective date of May 5, 1999, for the Service Agreement.

PECO states that copies of this filing have been supplied to Seaside Heights and to the Pennsylvania Public Utility Commission.

Comment date: July 2, 1999, in accordance with Standard Paragraph E at the end of this notice.

29. Public Service Company of New Mexico

[Docket No. ER99–3230–000]

Take notice that on June 14, 1999, Public Service Company of New Mexico (PNM) tendered for filing an executed copy of Amendment Number Two to the December 16, 1992, Contract for Electric Service between PNM and the City of Gallup, New Mexico.

PNM's filing is available for public inspection at its offices in Albuquerque, New Mexico.

Comment date: July 2, 1999, in accordance with Standard Paragraph E at the end of this notice.

30. Northeast Utilities Service Company

[Docket No. ER99–3231–000]

Take notice that on June 14, 1999, Northeast Utilities Service Company (NUSCO) tendered for filing a Service Agreement with Griffin Energy Marketing, L.L.C. (Griffin), under the NU System Companies' System Sale For Resale Tariff No. 7.

NUSCO states that a copy of this filing has been mailed to Griffin.

NUSCO requests that the Service Agreement become effective on June 1, 1999.

Comment date: July 2, 1999, in accordance with Standard Paragraph E at the end of this notice.

31. New England Power Company

[Docket No. ER99–3232–000]

Take notice that on June 14, 1999, New England Power Company (NEP) tendered for filing service agreements under NEP's Open Access Transmission Tariff, FERC Electric Tariff, Original Volume No. 9, between NEP and (i) DukeSolutions, Inc. (DukeSolutions); and (ii) HQ Energy Services (U.S.) Inc. (HQ Energy). Under the service agreements, NEP will provide Non-Firm Point-To-Point Transmission Service to DukeSolutions and HQ Energy.

NEP requests an effective date of May 15, 1999 for the filing.

Comment date: July 2, 1999, in accordance with Standard Paragraph E at the end of this notice.

32. Duke Energy Corporation

[Docket No. ER99–3233–000]

Take notice that on June 14, 1999, Duke Energy Corporation (Duke) tendered for filing a Service Agreement with Columbia Energy Power Marketing Corporation, for Firm Transmission Service under Duke's Open Access Transmission Tariff.

Duke requests that the proposed Service Agreement be permitted to become effective April 22, 1999 or upon acceptance by the Commission.

Duke states that this filing is in accordance with Part 35 of the Commission's Regulations and a copy has been served on the North Carolina Utilities Commission.

Comment date: July 2, 1999, in accordance with Standard Paragraph E at the end of this notice.

33. Duke Energy Corporation

[Docket No. ER99–3234–000]

Take notice that on June 14, 1999, Duke Energy Corporation (Duke) tendered for filing a Service Agreement with Columbia Energy Power Marketing Corporation for Non-Firm Transmission Service under Duke's Open Access Transmission Tariff.

Duke requests that the proposed Service Agreement be permitted to become effective on April 22, 1999, or upon acceptance by the Commission.

Duke states that this filing is in accordance with Part 35 of the Commission's Regulations and a copy has been served on the North Carolina Utilities Commission.

Comment date: July 2, 1999, in accordance with Standard Paragraph E at the end of this notice.

34. Northeast Utilities Service Company

[Docket No. ER99–3235–000]

Take notice that on June 14, 1999, Northeast Utilities Service Company (NUSCO) tendered for filing a Service Agreement with Griffin Energy Marketing, L.L.C. (Griffin) under the NU System Companies' System Power Sales/Exchange Tariff No. 6.

NUSCO states that a copy of this filing has been mailed to Griffin.

NUSCO requests that the Service Agreement become effective on June 1, 1999.

Comment date: July 2, 1999, in accordance with Standard Paragraph E at the end of this notice.

35. Boston Edison Company

[Docket No. OA96–70–000]

Take notice that on June 14, 1999, Boston Edison Company filed its refund report in compliance with the Commission's April 29, 1999 order in this docket.

Comment date: July 6, 1999, in accordance with Standard Paragraph E at the end of this notice.

36. Baltimore Gas and Electric Company and Niagara Mohawk Power Company

[Docket Nos. OA97–456–004 and OA97–158–008]

Take notice that Baltimore Gas and Electric Company and Niagara Mohawk Power Company each filed revised standards of conduct on June 14, 1999 in response to the Commission's May 14, 1999 Order. 87 FERC ¶ 61,186 (1999).

Baltimore Gas and Electric Company and Niagara Mohawk Power Company each state that it served copies of the filing on all parties in the respective proceedings.

Comment date: July 6, 1999, in accordance with Standard Paragraph E at the end of this notice.

37. Champion International Corporation

[Docket No. QF87–83–001]

Take notice that on June 10, 1999, Champion International Corporation (Champion) filed with the Federal Energy Regulatory Commission an amendment to its application for recertification of a facility as a qualifying cogeneration facility pursuant to 292.207(b) of the

Commission's regulations. No determination has been made that the submittal constitutes a complete filing. The facility is a topping-cycle cogeneration facility located within the Champion paper manufacturing facility at Bucksport, Maine (the Facility), which uses as its primary energy source a mix of wood bark, sawmill waste, wood pellets, treatment sludge and No. 6 oil. The Facility was granted qualifying facility status by the Commission on May 21, 1987 in Docket No. QF87–83–000].

The Facility presently produces electric power through two turbine generators, with total current net electric power production capacity of 83.2 MW. The Application was submitted on February 24, 1999 to reflect planned changes in the operation of the Facility which will occur on or about October 1, 2000, the on-line date for the Champion Clean Energy Facility (Clean Energy), a natural gas-fired combined cycle facility to be constructed adjacent to the Champion paper manufacturing facility in Bucksport, Maine. After the on-line date of the Clean Energy Facility, the electric production of the Facility will be reduced to 39.4 MW net under normal operating conditions, but under some conditions may revert to the operational levels certified in QF97–83–000. The amendment submitted responds to requests for information from the Commission, and reflects ownership by the Facility of certain generation leads and related transmission facilities. The Facility presently sells power under long-term contract to Central Maine Power Company (CMP) and will continue to do so after October 1, 2000.

Comment date: July 9, 1999, in accordance with Standard Paragraph E at the end of this notice.

Standard Paragraphs

E. Any person desiring to be heard or to protest such filing should file a motion to intervene or protest with the Federal Energy Regulatory Commission, 888 First Street, NE, Washington, DC 20426, in accordance with rules 211 and 214 of the Commission's Rules of Practice and Procedure (18 CFR 385.211 and 385.214). All such motions or protests should be filed on or before the Comment date. Protests will be considered by the Commission in determining the appropriate action to be taken, but will not serve to make protestants parties to the proceeding. Any person wishing to become a party must file a motion to intervene. Copies of these filings are on file with the Commission and are available for public inspection. This filing may also be viewed on the Internet at http://www.ferc.fed.us/ online/rims.htm (call 202–208–2222 for assistance).

David P. Boergers,

Secretary.

[FR Doc. 99–16155 Filed 6–24–99; 8:45 am]

BILLING CODE 6717–01–P

DEPARTMENT OF ENERGY

Federal Energy Regulatory Commission

[Docket No. EC99–84–000, et al.]

Somerset Power LLC, et al.; Electric Rate and Corporate Regulation Filings

June 16, 1999.

Take notice that the following filings have been made with the Commission:

1. Somerset Power LLC

[Docket No. EC99–84–000]

Take notice that on June 10, 1999, Somerset Power LLC (Somerset), filed a request for approval of the disposition of jurisdictional assets that may result from the transfer of Somerset's limited liability company membership interests among Somerset's upstream affiliates.

Comment date: July 12, 1999, in accordance with Standard Paragraph E at the end of this notice.

2. Storm Lake Power Partners I LLC

[Docket No. EC99–85–000]

Take notice that on June 11, 1999, Storm Lake Power Partners I LLC (Storm Lake Power Partners) filed an application under Section 203 of the Federal Power Act for approval to transfer an indirect membership interest in and to providing funding for Storm Lake Power Partners to Edison Capital, an indirect wholly-owned subsidiary of Edison International. Storm Lake I is developing a wind power generation project located in or near Alta, Iowa. All of the power from the project will be sold to MidAmerican Energy Company.

Comment date: July 9, 1999, in accordance with Standard Paragraph E at the end of this notice.

3. Entergy Nuclear Generation Company

[Docket No. EC99–86–000]

Take notice that on June 11, 1999, pursuant to Section 203 of the Federal Power Act and Part 33 of the Commission's regulations, Entergy Nuclear Generation Company (the Applicant) filed an application for approval of a corporate reorganization. The Applicant intends to purchase an electric generation facility located in the State of Massachusetts. The proposed corporate reorganization will not change the ultimate ownership or control of the facility.

A copy of the application has been served on the Massachusetts Department of Telecommunications and Energy, the utility regulatory commissions of the states in which Energy operates and all parties in Docket Nos. EC99–18 et al.

The Applicant has requested waivers of the Commission's regulations so that the filing may become effective at the earliest possible date, but no later than July 9, 1999.

Comment date: July 2, 1999, in accordance with Standard Paragraph E at the end of this notice.

4. Keyspan-Ravenswood, Inc.

[Docket No. EG99–166–000]

Take notice that on June 9, 1999, KeySpan-Ravenswood, Inc. (KeySpan-Ravenswood) filed with the Federal Energy Regulatory Commission (FERC or the Commission) an application for determination of exempt wholesale generator status pursuant to Part 365 of the Commission's regulations.

KeySpan-Ravenswood is a New York corporation that will be engaged directly and exclusively in the business of owning or operating, or both owning and operating, all or part of one or more eligible facilities located in Queens, New York. The eligible facilities will consist of approximately 2,168 MW of gas and/or oil fired electric generation facilities and related interconnection facilities. The output of the eligible facilities will be sold exclusively at wholesale.

Comment date: July 7, 1999, in accordance with Standard Paragraph E at the end of this notice. The Commission will limit its consideration of comments to those that concern the adequacy or accuracy of the application.

5. BIV Generation Company LLC

[Docket No. EG99–168–000]

Take notice that on June 10, 1999, BIV Generation Company LLC (BIV), 350 Indiana Street, Suite 300, Golden, Colorado 80401, filed with the Federal Energy Regulatory Commission (Commission) an Application for Determination of Exempt Wholesale Generator Status pursuant to Part 365 of the Commission's Regulations and Section 32 of the Public Utility Holding Company Act, as amended.

BIV, upon acquisition of a newly constructed 60 megawatt gas-fired generation plant located in Brush, Colorado, will be directly and exclusively engaged in the business of owning an eligible facility and selling

electric energy at wholesale. Retail sales of electricity within the meaning of Section 32 of PUHCA will not be made from the Facility. The Facility will be operated, under the direction of BIV, by Colorado Cogen Operators LLC, pursuant to an operation and maintenance agreement. No rate or charge for, or in connection with, the construction of the Facility, or for electric energy produced thereby (other than any portion of a rate or charge which represents recovery of the cost of a wholesale rate or charge), was in effect under the laws of any State of the United States on October 24, 1992. Copies of this application have been served upon the Colorado Public Utility Commission and the Securities and Exchange Commission.

Comment date: July 7, 1999, in accordance with Standard Paragraph E at the end of this notice. The Commission will limit its consideration of comments to those that concern the adequacy or accuracy of the application.

6. Northeast Utilities Service Company

[Docket No. ER99–1459–002]

Take notice that on June 11, 1999, Northeast Utilities Service Company (NUSCO), tendered for filing a report in compliance with the Commission's May 18, 1999 Order in Docket No. ER99–1459–001. NUSCO respectfully requests that the Commission waive the requirements of the above-referenced order to allow the submittal of this filing out of time.

Comment date: July 1, 1999, in accordance with Standard Paragraph E at the end of this notice.

7. Consumers Energy Company

[Docket No. ER99–2184–001]

Take notice that on June 11, 1999, Consumers Energy Company submitted a compliance filing relating to the amendment to its Open Access Transmission Tariff which adds a new Ancillary Service entitled Delivery Scheduling and Balancing Service. This Ancillary Service addresses deviations between deliveries from a generator and the transmission customer's energy schedule which are not classified as Energy Imbalance Service.

Copies of the filing were served upon Consumers' transmission customers, Michigan Public Service Commission and the service list in this proceeding.

Comment date: July 1, 1999, in accordance with Standard Paragraph E at the end of this notice.

8. Carolina Power & Light Company

[Docket No. ER99–2311–001]

Take notice that on June 11, 1999, Carolina Power & Light Company tendered for filing its compliance filing as required by the Commission's May 27, 1999, order in this proceeding.

Comment date: July 1, 1999, in accordance with Standard Paragraph E at the end of this notice.

9. Monroe Power Company

[Docket No. ER99–2324–001]

Take notice that on June 11, 1999, Monroe Power Company tendered for its compliance filing of its revised code of conduct as required by the Commission's May 27, 1999, order in this proceeding.

Comment date: July 1, 1999, in accordance with Standard Paragraph E at the end of this notice.

10. Public Service Company of Colorado

[Docket No. ER99–2327–000]

Take notice that on June 11, 1999, Public Service Company of Colorado (PS Colorado), tendered for filing a request to withdraw its Operating Reserve Supply Agreement between PS Colorado and Basin Electric Power Cooperative, filed on May 31, 1999.

Comment date: July 1, 1999, in accordance with Standard Paragraph E at the end of this notice.

11. Entergy Services, Inc.

[Docket No. ER99–3084–000]

Take notice that on June 11, 1999, Entergy Services, Inc., on behalf of Entergy Mississippi, Inc., Entergy Louisiana Inc., and Entergy Gulf States, Inc., requests that four Interconnection Agreement amendments filed on May 28, 1999, in the above-referenced docket be withdrawn.

Comment date: July 1, 1999, in accordance with Standard Paragraph E at the end of this notice.

12. Entergy Services, Inc.

[Docket No. ER99–3093–000]

Take notice that on June 11, 1999, Entergy Services, Inc., on behalf of Entergy Mississippi, Inc., Entergy Louisiana Inc., and Entergy Gulf States, Inc., requests that four Generator Imbalance Agreements filed on May 28, 1999, in the above-referenced docket be withdrawn.

Comment date: July 1, 1999, in accordance with Standard Paragraph E at the end of this notice.

13. Nevada Power Company

[Docket No. ER99–3110–000]

Take notice that on June 14, 1999, Nevada Power Company (Nevada Power), tendered for filing pursuant to section 205 of the Federal Power Act revisions to its transmission service rates under its open-access transmission tariff, FERC Revised Volume No. 3. Nevada Power also has filed corresponding changes to its pro forma merger transmission tariff in Docket No. ER99–34–000.

Nevada Power has requested an effective date of October 1, 1999.

Comment date: July 2, 1999, in accordance with Standard Paragraph E at the end of this notice.

14. New York State Electric & Gas Corporation

[Docket No. ER99–3203–000]

Take notice that on June 11, 1999, New York State Electric & Gas Corporation (NYSEG), tendered for filing pursuant to sections 35.16 and 131.51 of the Commission's Rules of Practice and Procedure, 18 CFR 35.16 and 131.51, a Notice of Succession for the transfer, effective May 14, 1999, of a restated power sales tariff (originally NGE Generation, Inc. Electric Power Sales Tariff, FERC Electric Rate Schedule, Original Volume No. 1) (Tariff) and five jurisdictional power sales agreements from NGE Generation, Inc. (NGE Gen) to NYSEG, together with amendments and restated agreements substituting NYSEG for NGE Gen. The five power sales agreements being restated are with Delmarva Power & Light Co. (Rate Schedule No. 51.6), GPU Service Corporation, as Agent for Jersey Central Power & Light Company, Metropolitan Edison Company, and Pennsylvania Electric Company (Rate Schedule No. 5.5), Consolidated Edison Co. of New York, Inc. (Rate Schedule No. 6.7), New York Power Authority (Rate Schedule No. 2.4), and NYSEG Solutions, Inc. (Rate Schedule No. 105).

The Commission approved the Notice of Succession and the restated Tariff and Agreements to become effective as of the transfer date, which occurred on May 14, 1999. NYSEG requests a waiver of any Commission requirement necessary to allow the transfer and the restated Tariff and Agreements to become effective as set forth in its filing, without modification or condition.

NYSEG served copies of the filing upon the New York State Public Service Commission, each of the purchasers under the above-listed rate schedules and each of the customers under the Tariff.

Comment date: July 1, 1999, in accordance with Standard Paragraph E at the end of this notice.

15. The Dayton Power and Light Company

[Docket No. ER99–3204–000]

Take notice that on June 11, 1999, The Dayton Power and Light Company

(Dayton), tendered for filing service agreements establishing Illinova Energy Partners, Inc., as a customer under the terms of Dayton's Market-Based Sales Tariff.

Dayton requests an effective date of one day subsequent to this filing for the service agreements. Accordingly, Dayton requests waiver of the Commission's notice requirements.

Copies of this filing were served upon Illinova Energy Partners, Inc., and the Public Utilities Commission of Ohio.

Comment date: July 1, 1999, in accordance with Standard Paragraph E at the end of this notice.

16. Western Systems Power Pool

[Docket No. ER99–3205–000]

Take notice that on June 11, 1999, the Western Systems Power Pool (WSPP), tendered for filing certain changes to the WSPP Agreement intended to revise one portion of that agreement to allow for increased flexibility and better reflect common commercial purposes.

WSPP seeks an effective date of June 12, 1999, for the change reflected in the June 11, 1999, filing.

Comment date: July 1, 1999, in accordance with Standard Paragraph E at the end of this notice.

17. ISO New England Inc.

[Docket No. ER99–3206–000]

Take notice that on June 11, 1999, ISO New England Inc. (the ISO), tendered for filing, pursuant to Section 205 of the Federal Power Act, revisions to Market Rule 6 together with a request that the Commission accept the revisions to Market Rule 6 on an expedited basis.

The ISO and the NEPOOL Executive Committee state that copies of these materials were sent to the Participants in the New England Power Pool, non-Participant transmission customers and to the New England state governors and regulatory commissions.

Comment date: July 1, 1999, in accordance with Standard Paragraph E at the end of this notice.

18. NorthWestern Corporation

[Docket No. ES99–41–000]

Take notice that on June 9, 1999, NorthWestern Corporation submitted an application under Section 204 of the Federal Power Act for authorization to issue indebtedness of the Corporation pursuant to a credit facility (the term of which may not extend beyond three years at any point in time) to be established and maintained with one or more financial institutions pursuant to one or more agreements pursuant to which the Corporation may borrow funds from time to time during such term, on a revolving credit basis or otherwise, up to a maximum principal amount of $250,000,000 outstanding at any one time, which indebtedness may be evidence by one or more promissory notes issued by the Corporation to such financial institutions. The Applicant also requested exemption from the competitive bidding and negotiated offer requirements.

Comment date: July 7, 1999, in accordance with Standard Paragraph E at the end of this notice.

19. Citizens Utilities Company

[Docket Nos. OA97–520–003 & OA97–610–003]

Take notice that Citizens Utilities Company (Citizens) filed revised standards of conduct on June 9, 1999. Citizens states that the revised standards replace the standards that it filed on May 11, 1999, which Citizens wishes to withdraw.

Citizens states that it served copies of the filing on all parties in this proceeding.

Comment date: July 1, 1999, in accordance with Standard Paragraph E at the end of this notice.

20. CP Power Sales Thirteen, L.L.C.

[Docket No. ER99–3200–000]

Take notice that on June 10, 1999, CP Power Sales Thirteen, L.L.C., tendered for filing Notice of Succession filed on behalf of CL Power Sales Thirteen, L.L.C. effective May 18, 1999, CL Power Sales Thirteen, L.L.C., changed its name to CP Power Sales Thirteen, L.L.C.

Comment date: June 30, 1999, in accordance with Standard Paragraph E at the end of this notice.

Standard Paragraphs

E. Any person desiring to be heard or to protest such filing should file a motion to intervene or protest with the Federal Energy Regulatory Commission, 888 First Street, N.E., Washington, D.C. 20426, in accordance with Rules 211 and 214 of the Commission's Rules of Practice and Procedure (18 CFR 385.211 and 385.214). All such motions or protests should be filed on or before the comment date. Protests will be considered by the Commission in determining the appropriate action to be taken, but will not serve to make protestants parties to the proceeding. Any person wishing to become a party must file a motion to intervene. Copies of these filings are on file with the Commission and are available for public inspection. This filing may also be viewed on the Internet at http://www.ferc.fed.us/ online/rims.htm (call 202–208–2222 for assistance).

David P. Boergers,

Secretary.

[FR Doc. 99–16156 Filed 6–24–99; 8:45 am]

BILLING CODE 6717–01–P

ENVIRONMENTAL PROTECTION AGENCY

[ER–FRL–6243–9]

Environmental Impact Statements; Notice of Availability

Responsible Agency: Office of Federal Activities, General Information (202) 564–7167 OR (202) 564–7153.

Weekly receipt of Environmental Impact Statements

Filed June 14, 1999 Through June 18, 1999

Pursuant to 40 CFR 1506.9.

EIS No. 990195, FINAL EIS, AFS, ID, WA, Douglas-fir Beetle Project, Harvest Tree, Regenerated Forest, Aquatic Restoration and Fuels Reduction, Idaho Panhandle National Forest, Coeur d'Alene River and Priest Lake Ranger District and Colville National Forest, Newport Ranger District, Kootenai, Shoshone and Bonner Counties, ID and Pend Orielle County, WA, Due: July 26, 1999, Contact: Brad Gilbert (208) 765–7438.

EIS No. 990196, DRAFT EIS, NPS, VA, Booker T. Washington National Monument (BOWA), General Management Plan, Implementation, Franklin County, VA, Due: August 09, 1999, Contact: Fred Herling (315) 597–1782.

EIS No. 990197, FINAL SUPPLEMENT, AFS, CO, Upper Elk River Access Analysis, Implementation, Proposal to Remove and/or Treat Blowdown Trees, Routt Divide Blowdown, Medicine Bow-Routt-National Forests, Hahn Peak/Bears Ears Ranger District, Routt County, CO, Due: July 26, 1999, Contact: Andy Cadenhead (970) 870–2220.

EIS No. 990198, FINAL EIS, BIA, NM, High Mesa Environmental Facility, Construction and Operation, Approval of Lease for Disposal of Municipal Solid Waste, Nambi Indian Reservation, Santa Fe County, New Mexico, Due: July 26, 1999, Contact: Allen Sedick (505) 766–1039.

EIS No. 990199, REVISED DRAFT EIS, BIA, CA, Programmatic—Cabazon Resource Recovery Park Section 6 General Plan, Cabazon Indian Reservation, Implementation, Approval of Master Lease and NPDES Permit, the City of Mecca, Riverside County, CA, Due: August 09, 1999,

Contact: Ronald M. Jaeger (916) 978–6000.

EIS No. 990200, DRAFT EIS, AFS, UT, Wasatch Powderbird Guides Permit Renewal, Proposal to Conduct Guided Helicopter Skiing Activities on National Forest System Land, Issuance of a Special-Use-Permit, Wasatch-Cache National Forest, Uinta National Forest, Salt Lake County, UT, Due: August 09, 1999, Contact: Rob Cruz (801) 733–2685.

EIS No. 990201, FINAL EIS, BLM, NV, Caliente Management Framework Plan Amendment, Implementation, Management of Desert Tortoise Habitat (Gopherus agassizii), Northeastern Mojave Recovery Unit, Lincoln County, NV, Due: July 26, 1999, Contact: Gene L. Drais (775) 289–1880.

EIS No. 990202, FINAL EIS, BLM, AZ, Ray Land Exchange/Plan Amendment, Implementation, Exchange of Federal Lands for Public Lands, Pinal, Gila and Mohave Counties, AZ, Due: July 26, 1999, Contact: Shelia McFarlin (602) 417–9568.

EIS No. 990203, DRAFT EIS, USN, NC, Introduction of the V–22 ''Osprey'' a new Type of Tiltrotor Aircraft, Replacement or Renovation of the facilities used to house Aircraft, Full Basing at MCAS Cherry Point and/or Partial Basing at both MCAS New River and Cherry Point, COE Section 404 Permit, NC, Due: August 09, 1999, Contact: James Haluska (757) 322–4889.

EIS No. 990204, REVISED FINAL EIS, AFS, UT, South Spruce Ecosystem Rehabilitation Project, Implementation, Revised Information, Dixie National Forest, Cedar City Ranger District, Iron and Kane Counties, UT, Due: July 26, 1999, Contact: Phillip Eisenhauser (435) 865–3200.

EIS No. 990205, DRAFT EIS, FTA, WA, Everett-to-Seattle Commuter Rail Project, Construction and Operation, To Link the Cities of Everett, Mukilteo, Edmonds, Shoreline, and the Seattle Waterfront, U.S. Coast Guard, COE Section 10 and 404 Permits, Snohomish County, WA, Due: August 09, 1999, Contact: David Phillip Beal (206) 684–1883.

EIS No. 990206, FINAL EIS, NOA, MI, Thunder Bay National Marine Sanctuary Management Plan, Comprehensive and Long-Term Management for Shipwrecks and other Underwater Cultural Resources, extending from Presque Isle Harbor to Sturgeon Paint and eastward into Lake Huron, Alpena, Alconia and Presque Isle Counties, MI, Due: July 26, 1999, Contact: Sherrard Foster (301) 713–3125.

EIS No. 990207, FINAL EIS, NOA, Atlantic Bluefish Fishery Management, Fishery Management Plan, Implementation, Nova Scotia to Florida, Northwestern Atlantic Ocean, Due: July 26, 1999, Contact: Kathie Rodrigues (202) 482–5916.

EIS No. 990208, FINAL EIS, NPS, PA, Gettysburg National Military Park, General Management Plan, Implementation, Develop a Partnership with the Gettysburg National Battlefield Museum Foundation, Gettysburg, PA, Due: July 26, 1999, Contact: Katie Lawhon (717) 334–1124.

EIS No. 990209, SECOND DRAFT SUPPLE, NIH, MD, National Institutes of Health Bethesda Main Campus Comprehensive Master Plan, Updated and Additional Information for the Revision to the Northwest Sector Plan, Montgomery County, MD, Due: August 09, 1999, Contact: Stella Serras Fiotes (301) 496–5037.

The above DSEIS is a Supplement to a Final EIS in 1996, which Due to an Administrative Error by the National Institutes of Health, was not Properly Filed with the U.S. Environmental Protection Agency. NIH has Confirmed that distribution of the (FEIS) was made Available to all Federal Agencies and Interested Parties for the 30-Day Wait Period. For Further Information Contact Stella Serras-Fiotes, AIA at (301) 496–5037.

Dated: June 22, 1999.

William D. Dickerson,

Director, NEPA Compliance Division, Office of Federal Activities.

[FR Doc. 99–16259 Filed 6–24–99; 8:45 am]

BILLING CODE 6560–50–U

ENVIRONMENTAL PROTECTION AGENCY

[FRL–6367–3]

Science Advisory Board; Notification of Public Advisory Committee Meeting

Pursuant to the Federal Advisory Committee Act, Pub. L. 92–463, notice is hereby given that the Science Advisory Board's (SAB) Environmental Economics Advisory Committee (EEAC) will conduct a public teleconference meeting on Tuesday, July 27, 1999, between the hours of 10:00 am and 12:00 noon, Eastern Time.

The meeting will be coordinated through a conference call connection in Room 3709 of the Waterside Mall, U.S. Environmental Protection Agency, 401 M Street SW, Washington, DC 20460. The public is welcome to attend the meeting physically or through a telephonic link. Additional instructions about how to participate in the conference call can be obtained by calling Ms. Dorothy Clark at (202) 260–6555, or via e-mail at: <clark.dorothy@epa.gov> by July 16, 1999. During this meeting the EEAC plans to complete its review of the EPA's economic analysis guidelines.

Background Information on Economic Analysis Guidelines

The Environmental Economics Advisory Committee (EEAC or the Committee) was asked to review the revised Guidelines for Preparing Economic Analyses, a document produced under the direction of the EPA's Regulatory Policy Council. The guidelines are designed to reflect Agency policy on the conduct of the economic analyses called for under applicable legislative and administrative requirements, including, but not limited to Executive Order 12866. These guidelines are intended to provide EPA analysts with a concise but thorough treatment of mainstream thinking on important technical issues so that they can conduct credible and consistent economic analyses. The guidelines refer to methods and practices that are commonly accepted in the environmental economics profession; however, they are not intended to preclude new or innovative forms of analysis. The guidelines are shaped by administrative and statutory requirements that contain direct references to the development of economic information during the development of regulations (e.g., evaluations of economic achievability).

The EEAC was first briefed on the draft guidelines at its August 19, 1998 meeting. Additional discussions occurred on the guidelines at the Committee's November 18, 1998 and April 20, 1999 meetings. At those meetings, the Agency presented information on, and then discussed with EEAC members, each section of the draft guidelines. (Please see 63 FR 41821, August 5, 1998; 63 FR 57296, October 27, 1998; and 64 FR 14232, March 24, 1999 for further details.)

For Further Information

Any member of the public wishing further information concerning the meeting or wishing to submit comments should contact Mr. Thomas O. Miller, Designated Federal Officer for the Environmental Economics Advisory Committee, Science Advisory Board (1400), U.S. Environmental Protection Agency, Washington DC 20460;

telephone (202) 260–5886; FAX (202) 260–7118; or via e-mail at: <miller.tom@epa.gov>. Single copies of the guidelines information provided to the Committee can be obtained by contacting Mr. Brett Snyder, Director, Economy and Environment Division (2172), Office of Policy, US Environmental Protection Agency, 401 M Street SW., Washington DC 20460, telephone (202) 260–5610, fax (202) 260-2685; or via email at: <snyder.brett@epa.gov>.

Providing Oral or Written Comments at SAB Meetings

The Science Advisory Board expects that public statements presented at its meetings will not be repetitive of previously submitted oral or written statements. In general, each individual or group making an oral presentation will be limited to a total time of ten minutes. For teleconference meetings, opportunities for oral comment will usually be limited to no more than three minutes per speaker and no more than fifteen minutes total. Written comments (at least 35 copies) received in the SAB Staff Office sufficiently prior to a meeting date (usually one week before the meeting), may be mailed to the relevant SAB committee or subcommittee; comments received too close to the meeting date will normally be provided to the committee at its meeting, or mailed soon after receipt by the Agency.

Additional information concerning the Science Advisory Board, its structure, function, and composition, may be found on the SAB Website (http://www.epa.gov/sab) and in The Annual Report of the Staff Director which is available from the SAB Publications Staff at (202) 260–4126 or via fax at (202) 260–1889.

Meeting Access

Individuals requiring special accommodation at this teleconference meeting, including wheelchair access to the conference room, should contact Mr. Miller at least five business days prior to the meeting so that appropriate arrangements can be made.

Dated: June 16, 1999.

A. Robert Flaak,

Acting Staff Director, Science Advisory Board.

[FR Doc. 99–16234 Filed 6–24–99; 8:45 am]

BILLING CODE 6560–50–P

ENVIRONMENTAL PROTECTION AGENCY

[FRL–6367–4]

Science Advisory Board; Public Advisory Committee Meeting

Pursuant to the Federal Advisory Committee Act, Public Law 92–463, notice is hereby given that the Science Advisory Board's (SAB) Executive Committee (EC) will meet on Tuesday, July 13, and Wednesday, July 14, 1999. The meeting will convene each day at 8:30 am, in the Administrator's Conference Room 1103 West Tower of the U.S. Environmental Protection Agency Headquarters Building at 401 M Street, SW, Washington, DC 20460, and adjourn no later than 5:30 pm on each day. All times noted are Eastern Time. The meeting is open to the public, however, seating is limited and available on a first come basis. Documents that are the subject of SAB reviews are normally available from the originating U.S. Environmental Protection Agency (EPA) office and are *not* available from the SAB Office. Public drafts of SAB reports are available to the Agency and the public from the SAB office. Details on availability are noted below.

At this meeting, the Executive Committee will receive updates from its committees and subcommittees concerning their recent and planned activities. As part of these updates, some committees will present draft reports for Executive Committee review and approval. Copies of these drafts will be available on the SAB Website (see below for site address) two weeks prior to the meeting or may be obtained from Ms. Tillery-Gadson (see address below).

In addition, the Board anticipates interacting with various senior Agency officials on issues of general interest, as well as issues currently before or proposed for future Board consideration.

For Further Information—Any member of the public wishing further information concerning the meeting or who wishes to submit comments should contact Dr. John R. Fowle, III, Acting Designated Federal Officer for the Executive Committee, Science Advisory Board (1400), U.S. EPA, Washington, DC 20460, phone (202) 260–8325; fax (202) 260–7118; or via e-mail at: <fowle.jack@epa.gov>. Copies of the draft meeting agenda and the draft reports will be available on the SAB Website (www.epa.gov/sab) approximately two weeks prior to the meeting. Alternatively, these materials can be obtained from Ms. Priscilla Tillery-Gadson at the above address and fax number or via phone (202) 260–4126 or via e-mail: <tillery.priscilla@epa.gov>.

Providing Oral or Written Comments at SAB Meetings

The Science Advisory Board expects that public statements presented at its meetings will not be repetitive of previously submitted oral or written statements. In general, each individual or group making an oral presentation will be limited to a total time of ten minutes. For conference call meetings, opportunities for oral comment will be limited to no more than five minutes per speaker and no more than fifteen minutes total. Written comments (at least 35 copies) received in the SAB Staff Office sufficiently prior to the meeting date, may be mailed to the Committee prior to its meeting; comments received too close to the meeting date will normally be provided to the Committee at its meeting. Written comments may be provided to the Committee up until the time of the meeting.

Information concerning the Science Advisory Board, its structure, function, and composition, may be found in The FY1998 Annual Report of the Staff Director which is available from the SAB Committee Evaluation and Support Staff (CESS) by contacting US EPA, Science Advisory Board (1400), Attention: CESS, 401 M Street, SW, Washington, DC 20460 or via fax (202) 260–1889. Additional information concerning the SAB can be found on the SAB Website at: http://www.epa.gov/sab

Individuals requiring special accommodation at this meeting, including wheelchair access, should contact Dr. Fowle at least five business days prior to the meeting so that appropriate arrangements can be made.

Dated: June 17, 1999.

A. Robert Flaak,

Acting Staff Director, Science Advisory Board.

[FR Doc. 99–16235 Filed 6–24–99 8:45 am]

BILLING CODE 6560–50–P

ENVIRONMENTAL PROTECTION AGENCY

[PF–788A and PF–848A; FRL–6076–9]

Notice of Filing of Pesticide Petitions

AGENCY: Environmental Protection Agency (EPA).

ACTION: Notice.

SUMMARY: This notice announces the amendment of pesticide petitions 1F3989, and 7F4900, proposing the

establishment of regulations for residues of certain pesticide chemicals in or on various food commodities.

DATES: Comments, identified by the docket control number PF–788A, and PF–848A, must be received on or before July 26, 1999.

ADDRESSES: By mail submit written comments to: Information and Records Integrity Branch, Public Information and Services Divison (7502C), Office of Pesticides Programs, Environmental Protection Agency, 401 M St., SW., Washington, DC 20460. In person bring comments to: Rm. 119, CM #2, 1921 Jefferson Davis Highway, Arlington, VA.

Comments and data may also be submitted electronically by following the instructions under ''SUPPLEMENTARY INFORMATION.'' No confidential business information should be submitted through e-mail.

Information submitted as a comment concerning this document may be claimed confidential by marking any part or all of that information as ''Confidential Business Information'' (CBI). CBI should not be submitted through e-mail. Information marked as CBI will not be disclosed except in accordance with procedures set forth in 40 CFR part 2. A copy of the comment that does not contain CBI must be submitted for inclusion in the public record. Information not marked confidential may be disclosed publicly by EPA without prior notice. All written comments will be available for public inspection in Rm. 119 at the address given above, from 8:30 a.m. to 4 p.m., Monday through Friday, excluding legal holidays.

FOR FURTHER INFORMATION CONTACT: Cynthia Giles-Parker, Registration Support Branch, Registration Division (7505C), Office of Pesticide Programs, Environmental Protection Agency, 401 M St., SW., Washington, DC 20460. Office location, telephone number, and e-mail address: Rm. 247, Crystal Mall #2, 1921 Jefferson Davis Highway, Arlington, VA 22202, (703) 305–7740; e-mail: giles-parker.cynthia@epamail.epa.gov.

SUPPLEMENTARY INFORMATION: EPA has received a pesticide petition as follows proposing the establishment and/or amendment of regulations for residues of certain pesticide chemical in or on various food commodities under section 408 of the Federal Food, Drug, and Comestic Act (FFDCA), 21 U.S.C. 346a. EPA has determined that this petition contains data or information regarding the elements set forth in section 408(d)(2); however, EPA has not fully evaluated the sufficiency of the submitted data at this time or whether the data supports granting of the petition. Additional data may be needed before EPA rules on the petition.

The official record for this notice of filing, as well as the public version, has been established for this notice of filing under docket control number [PF–788A], and [PF–848A] (including comments and data submitted electronically as described below). A public version of this record, including printed, paper versions of electronic comments, which does not include any information claimed as CBI, is available for inspection from 8:30 a.m. to 4 p.m., Monday through Friday, excluding legal holidays. The official record is located at the address in ''ADDRESSES'' at the beginning of this document.

Electronic comments can be sent directly to EPA at:

opp-docket@epamail.epa.gov

Electronic comments must be submitted as an ASCII file avoiding the use of special characters and any form of encryption. Comment and data will also be accepted on disks in Wordperfect 5.1/6.1 file format or ASCII file format. All comments and data in electronic form must be identified by the docket control number (PF–788A), and (PF–848A) and appropriate petition number. Electronic comments on this notice may be filed online at many Federal Depository Libraries.

List of Subjects

Environmental protection, Agricultural commodities, Food additives, Feed additives, Pesticides and pests, Reporting and recordkeeping requirements.

Dated: June 9, 1999.

James Jones,

Director, Registration Division, Office of Pesticide Programs.

Summary of Petition

The petitioner summary of the pesticide petition is printed below as required by section 408(d)(3) of the FFDCA. The summary of the petition was prepared by the petitioner and represents the views of the petitioner. EPA is publishing the petition summaries verbatim without editing them in any way. The petition summary announces the availability of a description of the analytical methods available to EPA for the detection and measurement of the pesticide chemical residues or an explanation of why no such method is needed.

Rohm and Haas Company

PP 1F3989 and 7F4900

Amended Petitions

In the **Federal Registers** of January 30, 1998 (63 FR 4631) (FRL–5766–2), and December 7, 1998 (63 FR 67476) (FRL–6047–2), EPA issued a notice of filing announcing that it had received pesticide petitions (PP) 1F3989, and 7F4900 from Rohm and Haas Company, 100 Independence Mall West, Philadelphia, PA 19106–2399, pursuant to section 408(d) of the Federal Food, Drug, and Cosmetic Act (FFDCA), 21 U.S.C. 346a(d) proposing to amend 40 CFR part 180. In petition 1F3989, Rohm and Haas Company proposed among other things, to establish a time-limited tolerance for residues of fenbuconazole (α-(2-[4-chlorophenyl]-ethyl)-α-phenyl-3-(1*H*-1,2,4-triazole)-1-propanenitrile] in or on stone fruits (except plums and prunes) at 2.0 ppm. In petition 7F4900, Rohm and Haas Company proposed, among other things, to establish permanent tolerances for fenbuconazole in or on grapefruit at 1.0 ppm, citrus oil (grapefruit) at 35.0 ppm, and grapefruit pulp, dried at 4.0 ppm.

Today's notice of filing announces the receipt of pesticide petitions from Rohm and Haas Company proposing to amend PP 1F3989 and 7F4900 by establishing tolerances for residues of fenbuconazole (α-(2-[4-chlorophenyl]-ethyl)-α-phenyl-3-(1*H*-1,2,4-triazole)-1-propanenitrile] plus RH-9129 and RH-9130, the diastereomeric lactone metabolites of fenbuconazole [5-(4-chlorophenyl)-dihydro-3-phenyl-3-(methyl-1*H*-1,2,4-triazole-1-yl)-2-3*H*-furanone) in or on the raw agricultural commodities plums at 2.0 parts per million (ppm), plums, dried (prunes) at 7.0 ppm (PP 1F3989), and for oranges at 1.0 ppm, orange, dry pulp at 4.0 ppm, and orange, citrus oil at 16 ppm (7F4900). EPA has determined that the petition contains data or information regarding the elements set forth in section 408(d)(2) of the FFDCA; however, EPA has not fully evaluated the sufficiency of the submitted data at this time or whether the data support granting of the petition. Additional data may be needed before EPA rules on the petition.

A. Residue Chemistry

1. *Plant metabolism*. The metabolism of fenbuconazole in plants (wheat, peaches, and sugar beets) is adequately understood for the purpose of these tolerances. The metabolism of fenbuconazole in all crops was similar and involves oxidation of the benzylic position alpha to the chlorophenyl ring. The metabolites which result from this

path are the benzylic alcohols and their conjugates, including sulfates and glucuronides, the iminolactones, the lactones, and the ketoacid, all resulting from intramolecular cyclization. A second pathway is oxidation of the unchlorinated ring to produce the 3- and 4-phenols and their conjugates. Combinations of the above two pathways produce phenol-lactones and their conjugates. A third pathway is cleavage of the triazole moiety, which produces free triazole and its conjugates.

2. *Analytical method*. An adequate enforcement method is available to enforce the established and proposed tolerances. Quantitation of fenbuconazole residues (parent plus lactones) at an analytical sensitivity of 0.01 milligrams/kilogram (mg/kg) is accomplished by soxhlet extraction of samples in methanol, partitioning into methylene chloride, redissolving in toluene, clean up on silica gel, and gas liquid chromatography using nitrogen specific thermionic detection.

3. *Magnitude of residues*. Field residue trials were conducted with an aqueous flowable formulation of fenbuconazole in geographically representative regions of the United States. The results from these studies support the proposed tolerances, and clearly indicate that the lactone metabolites (RH–9129 and RH–9130) are minor contributors to the total residue.

i. *Oranges*. A total of 16 field residue trials were conducted in oranges. Three applications were made at 0.25 pounds active ingredient/acre (lb ai/A), twice the maximum use rate of 0.125 lb ai/A, and whole fruit was harvested on the same day as the last application. The highest field residue value in whole fruit was 0.752 ppm. The average field residue value in whole fruit was 0.276 ppm. The highest field residue value in the edible pulp from five field trials was 0.0104 ppm. The average field residue value in pulp was 0.005 ppm. Residues were measured in orange process fractions including, juice, dried pulp, and cold press (citrus) oil. In the processing study, three applications were made at 0.25 lb ai/A, twice the maximum use rate of 0.125 lb ai/A, and the fruit were harvested seven days after the last application. Fruit was processed into multiple components. No residues (<0.01 ppm) were detected in juice, thus were was no concentration of residues in fresh juice. The average residues in dried pulp (cattle feed) and citrus oil (defined as a non-ready-to-eat processed commodity) were 4.1- and 32.1-times the amount of residues in fresh oranges, respectively.

ii. *Plums*. A total of 10 field residue trials were conducted in plums. Six to nine applications were made at the maximum use rate of 0.1 lb ai/A, and whole fruit was harvested on the same day as the last application. The highest field residue value in whole fruit was 0.315 ppm; the next highest field residue value was 0.071 ppm. The average field residue value in whole fruit was 0.062 ppm. Residues were measured in dried plums (prunes) in three residue trials. Six applications were made at the maximum use rate of 0.1 lb ai/A, and whole fruit was harvested on the same day as the last application. Dried plums contained residues of 0.0244, 0.04, and 0.139 ppm.

B. Toxicological Profile

1. *Acute toxicity*. Fenbuconazole is practically non-toxic after administration by the oral and dermal routes, and was not significantly toxic to rats after a 4–hour inhalation exposure. Fenbuconazole is classified as not irritating to skin and inconsequentially irritating to the eyes. It is not a skin sensitizer.

2. *Genotoxicity*. Fenbuconazole was negative (non-mutagenic) in an Ames assay with and without hepatic enzyme activation. Fenbuconazole was negative in a hypoxanthine guanine phosphoribosyl transferase (HGPRT) gene mutation assay using Chinese hamster ovary (CHO) cells in culture when tested with and without hepatic enzyme activation. In isolated rat hepatocytes, fenbuconazole did not induce unscheduled DNA synthesis (UDS) or repair. Fenbuconazole did not produce chromosome effects in rats *in vivo*. On the basis of the results from this battery of tests, it is concluded that fenbuconazole is not mutagenic or genotoxic.

3. *Reproductive and developmental toxicity*—i. *Rat developmental toxicity*. In the developmental study in rats, the maternal (systemic) no-observed adverse effect level (NOAEL) was 30 mg/kg/day based on decreases in body weight (bwt) and body weight gain at the lowest-observed adverse effect level (LOAEL) of 75 mg/kg/day. The developmental (fetal) NOAEL was 30 mg/kg/day based on an increase in post implantation loss and a significant decrease in the number of live fetuses per dam at the LOAEL of 75 mg/kg/day.

ii. *Rabbit developmental toxicity*. In the developmental study in rabbits, the maternal (systemic) NOAEL was 10 mg/kg/day based on decreased bwt gain at the LOAEL of 30 mg/kg/day. The developmental (fetal) NOAEL was 30 mg/kg/day based on increased resorptions at the LOAEL of 60 mg/kg/day.

iii. *Rat reproduction*. In the 2-generation reproduction toxicity study in rats, the maternal (systemic) NOAEL was 4 mg/kg/day based on decreased bwt and food consumption, increased number of dams delivering nonviable offspring, and increases in adrenal and thyroid weights at the LOAEL of 40 mg/kg/day. The reproductive (pup) NOAEL was 40 mg/kg/day, the highest dose tested (HDT).

4. *Subchronic toxicity*—i. *Rat 90–day oral study*. A subchronic feeding study in rats conducted for 13–weeks resulted in a NOAEL of 20 ppm (1.3 and 1.5 mg/kg/day in males and females, respectively). Minimal liver hypertrophy was observed in males at the LOAEL of 80 ppm. Increased liver weight, hepatic hypertrophy, thyroid hypertrophy, and decreased bwt were observed at the higher doses (400 and 1,600 ppm).

ii. *Mouse 90–day oral study*. A subchronic feeding study in mice conducted for 13–weeks resulted in a NOAEL of 60 ppm (11.1 and 17.6 mg/kg/day in males and females, respectively). Increased liver weight, hypertrophy in the liver (males), and increases in clinical chemistry parameters (males) were observed at the LOAEL of 180 ppm. These effects were all observed in females at 540 ppm in addition to males.

iii. *Dog 90–day oral study*. A subchronic feeding study in dogs conducted for 13–weeks resulted in a NOAEL of 100 ppm (3.3 and 3.5 mg/kg/day in males and females, respectively). At the LOAEL of 400 ppm, increased liver weight, clinical chemistry parameters, and liver hypertrophy (males) were observed.

iv. *Rat 4–week dermal study*. In a 21–day dermal toxicity study in the rat, the NOAEL was greater than 1,000 mg/kg/day, with no effects seen at this limit dose.

5. *Chronic toxicity*—i. *Dog*. A 1–year feeding study in dogs resulted in a NOAEL of 15 ppm (0.62 mg/kg/day) for females and 150 ppm (5.2 mg/kg/day) for males. Decreased bwt, increased liver weight, liver hypertrophy, and pigment in the liver were observed at the LOAEL of 150 and 1,200 ppm in females and males, respectively.

ii. *Mouse*. A 78–week chronic/oncogenicity study was conducted in male and female mice at 0, 10, 200 (males only), 650, and 1,300 ppm (females only). The NOAEL was 10 ppm (1.4 mg/kg/day), and the LOAEL was 200 ppm (26.3 mg/kg/day) for males and 650 ppm (104.6 mg/kg/day) for females based on increased liver weight and

histopathological effects on the liver, which were consistent with chronic enzyme induction. There was no statistically significant increase of any tumor type in males, however, there was a statistically significant increase in combined liver adenomas and carcinomas in females at the high dose only (1,300 ppm; 208.8 mg/kg/day). There were no liver tumors in the control females, and liver tumor incidences in treated females just exceeded the historical control range. In ancillary mode-of-action studies in female mice, the increased tumor incidence was associated with changes in several parameters in mouse liver following high doses of fenbuconazole, including an increase in P450 enzymes (predominately of the CYP 2B type), an increase in cell proliferation, an increase in hepatocyte hypertrophy, and an increase in liver weight. Changes in these liver parameters as well as the occurrence of the low incidence of liver tumors were non-linear with respect to dose (i.e., were observed only at high dietary doses of fenbuconazole). Similar findings have been shown with several pharmaceuticals, including phenobarbital which is not carcinogenic in humans. The non-linear dose response relationship observed with respect to liver changes (including the low incidence of tumors) in the mouse indicates that these findings should be carefully considered in deciding the relevance of high-dose animal tumors to human dietary exposure.

iii. *Rat*. A 24-month chronic/oncogenicity study in male and female rats was conducted at 0, 8, 80, and 800 ppm fenbuconazole, and a second 24-month chronic/oncogenicity was conducted in male rats at 0, 800, and 1,600 ppm. The NOAEL was 80 ppm (3 and 4 mg/kg/day in males and females, respectively), and the LOAEL was 800 ppm (31 and 43 mg/kg/day in males and females, respectively) based on decreased bwt, increased liver and thyroid weights, and liver and thyroid hypertrophy. Fenbuconazole produced a minimal but statistically significant increase in the incidence of combined thyroid follicular cell benign and malignant tumors. These findings occurred only in male rats following life-time ingestion of very high levels (800 and 1,600 ppm in the diet) of fenbuconazole. Ancillary mode-of-action studies demonstrated that the increased incidence of thyroid tumors was secondary to increased liver metabolism and biliary excretion of thyroid hormone in the rat. This mode of action is a non-linear phenomenon in that thyroid tumors occur only at high doses where there is an increase in liver weight and metabolic capacity of the liver. At lower doses of fenbuconazole in rats, the liver is unaffected and there is no occurrence of the secondary thyroid tumors. Worst-case estimates of dietary intake of fenbuconazole in human adults and children indicate effects on the liver or thyroid, including thyroid tumors, will not occur, and that there is a reasonable certainty of no harm.

In support of the findings above, EPA's Science Advisory Board has approved a final thyroid tumor policy, confirming that it is reasonable to regulate chemicals on the basis that there exists a threshold level for thyroid tumor formation, conditional upon providing plausible evidence that a secondary mode of action is operative. This decision supports a widely-held and internationally respected scientific position.

The reference dose (RfD) of 0.03 mg/kg/day was established by the Agency based on the NOAEL of 3.0 mg/kg/day in the chronic rat feeding study and an uncertainty factor of 100.

The Carcinogenicity Peer Review Committee (CPRC) of the Health Effects Division (HED) of EPA has classified fenbuconazole as a Group C tumorigen (possible human carcinogen with limited evidence of carcinogenicity in animals). The Committee has decided that it is appropriate to use a low-dose extrapolation model based on the mouse data with the Q_{1*} of 0.359×10^{-2} $(mg/kg/day)^{-1}$ and surface area estimated by $(bwt)^{3/4}$. All estimates of dietary oncogenic risk are based on this risk factor.

6. *Animal metabolism*. The absorption, distribution, excretion, and metabolism of fenbuconazole in rats, goats, and hens were investigated. Following oral administration, fenbuconazole was completely and rapidly absorbed, extensively metabolized by oxidation/hydroxylation and conjugation, and rapidly and essentially completely excreted predominately in the feces. Fenbuconazole did not accumulate in tissues.

7. *Metabolite toxicology*. Common metabolic pathways for fenbuconazole have been identified in both plants (wheat, peaches, and sugar beets) and animals (rat, goat, and hen). The metabolic pathway common to both plants and animals involves oxidation of the benzylic position alpha to the chlorophenyl ring. The metabolites which result from this path are the benzylic alcohols and their conjugates, including sulfates and glucuronides, the iminolactones, the lactones, and the ketoacid, all resulting from intramolecular cyclization. A second pathway is oxidation of the unchlorinated ring to produce the 3- and 4-phenols and their conjugates. Combinations of the above two pathways produce phenol-lactones and their conjugates. A third pathway is cleavage of the triazole moiety, which produces free triazole and its conjugates. Extensive degradation and elimination of polar metabolites occurs in animals such that residues are unlikely to accumulate in humans or animals exposed to these residues through the diet.

8. *Endocrine disruption*. The mammalian endocrine system includes estrogen and androgens as well as other hormonal systems. Fenbuconazole is not known to interfere with reproductive hormones; thus, fenbuconazole should not be considered to be estrogenic or androgenic. There are no known instances of proven or alleged adverse reproductive or developmental effects to people, domestic animals, or wildlife as a result of exposure to fenbuconazole or its residues.

C. Aggregate Exposure

1. *Dietary exposure*—i. *Food*. Permanent tolerances have been established (40 CFR 180.480) or proposed for the residues of fenbuconazole in or on a variety of raw agricultural commodities:

Commodity	Tolerance (ppm)
Almond nutmeat	0.05 (P)[1]
Almond hulls	3.0 (P)
Apples	0.4 (P)
Apple pomace, wet	1.0 (P)
Banana (whole fruit)	4.0
Banana (pulp)	0.05

Commodity	Tolerance (ppm)
Blueberry	0.3 (P)
Cattle, fat	0.05 (P)[3]
Cattle, liver	0.1 (P)[4]
Citrus oil (grapefruit)	35.0 (P)
Grapefruit	1.0 (P)
Grapefruit juice	N/R[2]
Molasses (beet)	0.4[5]
Pecans	0.1
Pulp, dried (beet)	1.0
Pulp, dry (grapefruit)	4.0 (P)
Refined sugar	N/R[2]
Stone Fruit (except plum/prune)	2.0
Sugar beet (root)	0.2 (P)
Sugar beet (top)	9.0 (P)
Wheat (grain)	0.05 (P)
Wheat (straw)	10.0 (P)

[1] (P): Proposed tolerance;
[2] Tolerance not required because concentration factor is < 1 in processing study;
[3] An identical tolerance is pending for fat in poultry, hogs, horses, sheep, and goats;
[4] An identical tolerance is pending for liver in poultry, hogs, horses, sheep, and goats;
[5] For livestock feed; not a human dietary component.

Risk assessments were conducted by Rohm and Haas to assess dietary exposures and risks from fenbuconazole as follows:

a. *Acute exposure and risk*. No acute endpoint was identified for fenbuconazole, and no acute risk assessment is required.

b. *Chronic exposure and risk*. Risk associated with chronic dietary exposure from fenbuconazole was assessed on four levels. In the first assessment, tolerance level residues and 100% crop treated were assumed. In the second assessment, tolerance level residues and Rohm and Haas Company's conservative estimates of the highest achievable percent crop treated refinements were assumed. Rohm and Haas Company's percent of crop treated estimates used in the assessments are almonds = 50%, blueberry = 30%, grapefruit = 30%, bananas = 20%, apples = 15%, oranges = 15%, pecans = 11%, sugar beets = 3%, and wheat = 0.3%. In the third assessment, average field trial (anticipated) residues and 100% crop treated were assumed. In the fourth assessment, average field trial residues and Rohm and Haas Company's percent of crop treated estimates indicated above were assumed. Rohm and Haas Company's processing factors for apple, orange, and grapefruit juice were assumed in all four assessments. One hundred percent crop treated was assumed when calculating the dietary burden from which secondary residue tolerances in meat and fat were derived. A 12.8% crop treated refinement was used for stone fruit in all four assessments June 10, 1998 (FR 63 31636) (FRL 5791–5). The Anticipated Residue Contribution (ARC) from all proposed and existing food uses of fenbuconazole was assessed.

The RfD used for the chronic dietary analysis is 0.03 mg/kg/day. Potential chronic exposures were estimated using NOVIGEN'S Dietary Exposure Evaluation Model (DEEM™, Version 5.31), which uses USDA food consumption data from the 1989–1992 survey. The existing and proposed fenbuconazole tolerances, and average fenbuconazole residues result in ARCs that are equivalent to the following percentages of the RfD:

Population Subgroup	DEEM[1] %RfD	DEEM[2] %RfD	DEEM[3] %RfD	DEEM[4] %RfD
U.S. Population (48 States)	2.7	0.9	0.4	0.1
Non-Hispanic Other than Black or White	3.5	1.0	0.5	0.2
All Infants (< 1-year old)	6.1	3.5	1.0	0.4
Nursing Infants (< 1-year old)	2.2	0.8	0.5	0.1
Non-Nursing Infants (< 1-year old)	7.7	4.7	1.3	0.5
Children (1-6 years old)	6.4	1.8	1.1	0.3
Children (7-12 years old)	4.2	1.2	0.7	0.2
Females (13+ / Nursing)	3.2	0.8	0.5	0.1

[1] Assumes residues are present at tolerance levels and 100% crop treated (12.8% stone fruit);
[2] Assumes residues are present at tolerance levels and includes percent crop treated refinements;
[3] Assumes residues are present at their average field trial residue levels and 100% crop treated (12.8% stone fruit); and
[4] Assumes residues are present at their average field trial residue levels, and includes percent crop treated refinements.

c. *Aggregate cancer risk for U.S. population*. Fenbuconazole has been classified as a Group C Carcinogen with a Q^{1*} value of 0.00359 mg/kg/day^{-1}. Cancer risk assessments for all existing and proposed food uses for the U.S. population are as follows:

Assumptions/Refinements	All Crops	Orange & Proc. Frac.	Plums/Prunes
Tolerance residue levels and 100% crop treated (12.8% stone fruit) assumed:	2.90E-06	1.05E-06	1.46E-07
Tolerance residue levels and percent crop treated refinements assumed:	9.24E-07	1.57E-07	1.46E-07
Anticipated residue levels and 100% crop treated (12.8% stone fruit) assumed:	4.65E-07	1.6E-08	3E-09
Anticipated residue levels and percent crop treated refinements assumed:	1.44E-07	2E-09	3E-09

2. *Drinking water*. Fenbuconazole has minimal tendency to contaminate groundwater or drinking water because of its adsorptive properties on soil, solubility in water, and degradation rate. Computer modeling of laboratory and field dissipation data using EPA's Pesticide Root Zone Model (PRZM) and USDA's Groundwater Loading Effects of Agricultural Management Systems (GLEAMS) models predict that fenbuconazole will not leach into groundwater, even if heavy rainfall is simulated. The modeling predictions are consistent with the data from environmental studies in the laboratory and the results of actual field dissipation studies. There is no established Maximum Concentration Level (MCL) for residues of fenbuconazole in drinking water. No drinking water health advisory levels have been established for fenbuconazole. There is no entry for fenbuconazole in the ''Pesticides in Groundwater Database'' (EPA 734–12–92–001; September, 1992).

3. *Non-dietary exposure*. Fenbuconazole is not currently registered for any indoor or outdoor residential uses; therefore, no non-dietary residential exposure is anticipated.

D. Cumulative Effects

The potential for cumulative effects of fenbuconazole with other substances that have a common mechanism of toxicity was considered. Fenbuconazole belongs to the class of fungicide chemicals known as triazoles, which have demethylase inhibition capability. The toxicological effects of fenbuconazole are related to its effects on rodent thyroid and liver. Extensive data are available on the biochemical mode of action by which fenbuconazole produces animal tumors in rats and mice. These data indicate that the initiating events do not occur below a given dose, and that the processes are reversible. There are no data which suggest that the mode of action by which fenbuconazole produces these animal tumors or any other toxicological effect is common to all fungicides of this class. In fact, the closest structural analog to fenbuconazole among registered fungicides of this class is not tumorigenic in animals even at maximally tolerated doses and has a different spectrum of toxicological effects.

E. Safety Determination

1. *U.S. population*—i. *Acute exposure and risk*. Since no acute endpoint was identified for fenbuconazole, no acute risk assessment is required.

ii. *Chronic exposure and risk*. Using the conservative exposure assumptions described above and taking into account the completeness and reliability of the toxicity data, the percentage of the RfD that will be utilized by dietary (food only) exposure to residues of fenbuconazole from existing, pending, and proposed tolerances is 2.7% for the U.S. population, assuming residues are present at their tolerance levels and 100% crop treated (12.8% for stone fruit). Aggregate exposure is not expected to exceed 100%. EPA generally has no concern for exposures below 100% of the RfD because the RfD represents the level at or below which daily aggregate dietary exposure over a lifetime will not pose appreciable risks to human health. Rohm and Haas concludes that there is a reasonable certainty that no harm will result from aggregate exposure to fenbuconazole residues to the U.S. population.

2. *Infants and children—Safety factor for Infants and children*—i. *General*. In assessing the potential for additional sensitivity of infants and children to residues of fenbuconazole, data from developmental toxicity studies in the rat and rabbit, and 2-generation reproduction studies in the rat are considered. The developmental toxicity studies are designed to evaluate adverse effects on the developing organism resulting from maternal pesticide exposure during gestation. Reproduction studies provide information relating to effects from exposure to the pesticide on the reproductive capability of mating animals and data on systemic toxicity.

ii. *Developmental toxicity studies*—a. *Rat*. In the developmental study in rats, the maternal (systemic) NOAEL was 30 mg/kg/day based on decreases in bwt and bwt gain at the LOAEL of 75 mg/kg/day. The developmental (fetal) NOAEL was 30 mg/kg/day based on an increase in post implantation loss and a significant decrease in the number of live fetuses per dam at the LOAEL of 75 mg/kg/day.

b. *Rabbit*. In the developmental study in rabbits, the maternal (systemic) NOAEL was 10 mg/kg/day based on decreased bwt gain at the LOAEL of 30 mg/kg/day. The developmental (fetal) NOAEL was 30 mg/kg/day based on increased resorptions at the LOAEL of 60 mg/kg/day.

iii. *Reproductive toxicity study*. In the 2–generation reproduction toxicity study in rats, the maternal (systemic) NOAEL was 4 mg/kg/day based on decreased bwt and food consumption, increased number of dams delivering nonviable offspring, and increases in adrenal and thyroid weights at the LOAEL of 40 mg/kg/day. The reproductive (pup) NOAEL was 40 mg/kg/day, the highest dose tested (HDT).

iv. *Pre- and Post-Natal sensitivity*. The pre- and post-natal toxicology database for fenbuconazole is complete with respect to current toxicological data requirements. There is a 10-fold difference between the developmental NOAEL of 30 mg/kg/day from the rat and rabbit developmental toxicity studies and the NOAEL of 3 mg/kg/day from the chronic rat feeding study which is the basis of the RfD. It is further noted that in the rabbit and rat developmental toxicity studies, the developmental NOAELs are similar to or greater than the respective maternal NOAELs. In the rat reproduction study, the maternal NOAEL (4 mg/kg/day) was ten times lower than the developmental (pup) and reproductive NOAEL (40 mg/kg/day, the HDT). These studies indicate that there is no additional sensitivity for infants and children in the absence of maternal toxicity for fenbuconazole.

v. *Acute risk*. No acute dietary risk has been identified for fenbuconazole.

vi. *Chronic risk*. Using the exposure assumptions described above, the exposure to fenbuconazole from food will utilize 7.7% (non-nursing infants <

1–year old) and 2.2% (nursing infants < 1–year old) of the RfD assuming residues are present at tolerance levels and 100% crop treated (12.8% for stone fruit), and will utilize 1.3% (non-nursing infants < 1–year old) and 0.5% (nursing infants < 1–year old) of the RfD assuming residues are present at their average field residue levels and 100% crop treated (12.8% for stone fruit). The percent of the RfD that will be used by the food exposure for children 1–6 years old is 6.4 and 1.1% assuming residues are present at tolerance and average field residue levels, respectively, and 100% crop treated (12.8% for stone fruit). The percent of the RfD that will be used by the food exposure for children 7–12 years old is 4.2 and 0.7% assuming residues are present at tolerance and average field residue levels, respectively, and 100% crop treated (12.8% for stone fruit). EPA generally has no concern for exposures below 100% of the RfD because the RfD represents the level at or below which daily aggregate dietary exposure over a lifetime will not pose appreciable risks to human health.

vii. *Conclusion*. It is concluded that reliable and complete data support the use of the 100–fold uncertainty factor, and that an additional 10–fold factor is not needed to ensure the safety of infants and children from dietary exposure.

F. International Tolerances

There are no Codex Maximum Residue Levels (MRLs) for fenbuconazole, but the fenbuconazole database was evaluated by the World Health Organization (WHO) and the Food and Agriculture Organization (FAO) Expert Panels at the Joint Meeting on Pesticide Residues (JMPR) in September 1997. An Allowable Daily Intake (ADI (same as the RfD) of 0.03 mg/kg/day and a total of 32 Codex MRLs were proposed in the JMPR report.

[FR Doc. 99–16238 Filed 6–24–99; 8:45 am]

BILLING CODE 6560–50–F

ENVIRONMENTAL PROTECTION AGENCY

[FRL–6365–5]

Final NPDES General Permit for Discharges From Petroleum Bulk Stations and Terminals in Texas (TXG340000)

AGENCY: Environmental Protection Agency (EPA).

ACTION: Final Issuance of NPDES general permit.

SUMMARY: EPA Region 6 today issues a National Pollutant Discharge Elimination System (NPDES) general permit authorizing discharges of facility waste water and contact storm water from petroleum bulk stations and terminals in Texas. This permit covers facilities having Standard Industrial Classification (SIC) Code 5171.

The permit has limits on Total Petroleum Hydrocarbons, benzene, Total BTEX (sum of benzene, toluene, ethyl benzene and xylene), Total Lead and pH. There is also a requirement of no acute toxicity as determined by requiring greater than 50% survival in 100% effluent using a 24 hour acute test. In addition, the permit has limits on arsenic, barium, cadmium, chromium, copper, manganese, mercury, nickel, selenium, silver and zinc as contained in Texas Natural Resource Conservation Commission (TNRCC) Regulations for Hazardous Metals (30 TAC 319, Subchapter B), as well as requirements for no discharge of floating solids or visible foam in other than trace amounts, and no discharge of visible oil. There is also the requirement to develop and implement a pollution prevention plan for the storm water discharges authorized by this permit.

DATES: The limits and monitoring requirements in this permit shall become effective on July 26, 1999.

FOR FURTHER INFORMATION CONTACT: Ms. Wilma Turner, EPA Region 6, 1445 Ross Avenue, Dallas, Texas 75202–2733, telephone (214) 665–7516. Copies of the complete response to comments may be obtained from Ms. Turner. The complete response to comments and final permit can also be found on the Internet at http://www.epa.gov/earth1r6/6wq/6wq.htm.

SUPPLEMENTARY INFORMATION: Regulated categories and entities include:

Category	Examples of regulated entities
Industry	Operators of petroleum bulk stations and terminals.

This table is not intended to be exhaustive, but rather provides a guide for readers regarding entities likely to be regulated by this action. This table lists the types of entities that EPA is now aware could potentially be regulated by this action. Other types of entities not listed in the table could also be regulated. To determine whether your (facility, company, business, organization, etc.) is regulated by this action, you should carefully examine the applicability criteria in Part I, Section A.1 of this permit. If you have questions regarding the applicability of this action to a particular entity, consult the person listed in the preceding **FOR FURTHER INFORMATION CONTACT** section.

Pursuant to section 402 of the Clean Water Act (CWA), 33 U.S.C. section 1342, EPA proposed and solicited public comment on NPDES General Permit TXG340000 at 63 FR 41848 (August 5, 1998). The comment period closed on October 5, 1998. Region 6 received written comments from Texas Natural Resources Conservation Commission, Texas Oil and Gas Association, Chevron Products Company, and DynMcDermott Petroleum Operations Company.

EPA Region 6 has considered all comments received. In response to the comments, EPA agrees to extend the time for existing dischargers from no later than 30 days to no later than 90 days from the permit effective date to submit Notices of Intent to be covered by the permit. In addition, EPA agrees to reduce the monitoring frequency for the 24 hour acute toxicity requirement from twice per year to once per year, and to allow a facility with multiple storm water outfalls discharging substantially identical storm water effluents to collect and analyze an effluent sample for one of those outfalls and report that the data also applies to the other substantially identical outfalls.

Other Legal Requirements

A. State Certification

Under section 401(a)(1) of the Act, EPA may not issue an NPDES permit until the State in which the discharge will originate grants or waives certification to ensure compliance with appropriate requirements of the Act and State law. The Region has received certification, dated August 14, 1998, from the Texas Natural Resources Conservation Commission for NPDES General Permit TXG340000.

B. Endangered Species Act

EPA has determined that issuance of this general permit is unlikely to adversely affect any threatened or endangered species or its critical habitat. EPA sought written concurrence from the United States Fish and Wildlife Service on this determination. In a letter dated September 2, 1998, the United States Fish and Wildlife Service concurred with EPA's finding that issuance of this general permit is not likely to adversely affect any federally listed species, provided that two general concerns were addressed in the permit. The first concern was in regard to the 24-hour acute testing requirement. The Service was concerned that the permit language does not specify as to how test

organisms, daphnia pulex and the fathead minnow, are used in testing. The Service stated that the permit should state that testing of the effluent requires both species and that failure with either species beyond the 50% survival in 100% effluent would constitute failure. The second concern was that the permit should include language that permittees located in counties overlying the San Antonio and Barton Springs portion of the Edwards Aquifer (Kinney, Travis, Williamson, Uvalde, Medina, Bexar, Blanco, Hays, and Comal Counties) must consult the Edwards Aquifer Rules (30 TAC Chapter 213) and its amendments. In response to the Service's concerns, a requirement has been added to the Part I.C of the final permit requiring compliance with 30 TAC 213 (Edwards Aquifer Rules). The requirements for 24-hour acute testing contained in Part I.C and I.F of the permit already address the Service's concern regarding the 24 hour acute testing requirement.

C. Coastal Coordination Act

Pursuant to Section 506.20 of 31 TAC of the Coastal Coordination Act, the Texas Coastal Coordination Council has reviewed the permit for consistency with the Texas Coastal Management Program. The Council has determined that the permit is consistent with the Texas Coastal Management Program goals and policies.

D. Historic Preservation Act

Facilities which adversely affect properties listed or eligible for listing in the National Register of Historical Places are not authorized to discharge under this permit.

E. Executive Order 12866

The Office of Management and Budget (OMB) has exempted this action from the review requirements of Executive Order 12866.

F. Paperwork Reduction Act

The information collection required by this permit has been approved by OMB under the provisions of the Paperwork Reduction Act, 44 U.S.C. 3501 *et seq.*, in submission made for the NPDES permit program and assigned OMB control numbers 2040–0086 (NPDES permit application) and 2040–0004 (discharge monitoring reports).

G. Unfunded Mandates Reform Act

Section 201 of the Unfunded Mandates Reform Act (UMRA), P.L. 104-4, generally requires Federal agencies to assess the effects of their ''regulatory actions'' on State, local, and tribal governments and the private sector. UMRA uses the term ''regulatory actions'' to refer to regulations. (*See*, e.g., UMRA section 201, ''Each agency shall * * * assess the effects of Federal regulatory actions * * * (other than to the extent that such regulations incorporate requirements specifically set forth in law)'' (emphasis added)). UMRA section 102 defines ''regulation'' by reference to section 658 of Title 2 of the U.S. Code, which in turn defines ''regulation'' and ''rule'' by reference to section 601(2) of the Regulatory Flexibility Act (RFA). That section of the RFA defines ''rule'' as ''any rule for which the agency publishes a notice of proposed rulemaking pursuant to section 553(b) of [the Administrative Procedure Act (APA)], or any other law * * *''

NPDES general permits are not ''rules'' under the APA and thus not subject to the APA requirement to publish a notice of proposed rulemaking. NPDES general permits are also not subject to such a requirement under the CWA. While EPA publishes a notice to solicit public comment on draft general permits, it does so pursuant to the CWA section 402(a) requirement to provide ''an opportunity for a hearing.'' Thus, NPDES general permits are not ''rules'' for RFA or UMRA purposes.

EPA thinks it is unlikely that this permit issuance would contain a Federal requirement that might result in expenditures of $100 million or more for State, local and tribal governments, in the aggregate, or the private sector in any one year.

The Agency also believes that the permit issuance would not significantly nor uniquely affect small governments. For UMRA purposes, ''small governments'' is defined by reference to the definition of ''small governmental jurisdiction'' under the RFA. (*See* UMRA section 102(1), referencing 2 U.S.C. 658, which references section 601(5) of the RFA.) ''Small governmental jurisdiction'' means governments of cities, counties, towns, etc., with a population of less than 50,000, unless the agency establishes an alternative definition.

The permit issuance also will not uniquely affect small governments because compliance with the proposed permit conditions affects small governments in the same manner as any other entities seeking coverage under the permit.

H. Regulatory Flexibility Act

The Regulatory Flexibility Act, 5 U.S.C. 601 *et seq.*, requires that EPA prepare a regulatory flexibility analysis for regulations that have a significant impact on a substantial number of small entities. Compliance with the permit requirements will not result in a significant impact on dischargers, including small businesses, covered by this permit. EPA Region 6 therefore concludes that issuance of this permit will not have a significant impact on a substantial number of small entities.

Authorization To Discharge Under the National Pollutant Discharge Elimination System

In compliance with the provisions of the Federal Water Pollution Control Act, as amended (33 U.S.C. 1251 *et seq.*: the ''Act''), this permit authorizes discharges to Waters of the United States of facility waste water and contact storm water from petroleum bulk stations and terminals in Texas. The discharges are authorized in accordance with effluent limitations and other conditions set forth in Parts I and II of this permit.

In order for discharges to be authorized by this permit, operators of facilities discharging waste waters from petroleum bulk stations and terminals must submit written notification to the Regional Administrator that they intend to be covered (See Part I.A.2). For existing discharges, the notification must be submitted no later than 90 days after the effective date of this permit. For new dischargers, the notification must be submitted at least 30 days prior to the beginning of a discharge. Unless otherwise notified in writing by the Regional Administrator after submission of the notification, operators requesting coverage are authorized to discharge under this general permit. Operators who fail to notify the Regional Administrator of intent to be covered are not authorized to discharge under this general permit.

Facilities which adversely affect properties listed or eligible for listing in the National Register of Historic Places are not authorized to discharge under this permit.

This permit shall become effective at midnight, Central Time on July 26, 1999.

This permit and the authorization to discharge shall expire at midnight, Central Time on July 26, 2004.

Signed this 3rd day of June, 1999.

Oscar Ramirez, Jr.,

Acting Director, Water Quality Protection Division, EPA Region 6.

Part I

Section A. Permit Applicability and Coverage Conditions

1. Discharges Covered

This permit covers discharges of facility waste water and contact storm water from petroleum bulk stations and terminals to Waters of the United States in Texas. This permit covers facilities having Standard Industrial Classification (SIC) Code 5171. This permit does not authorize the discharge of domestic sewage.

2. Notice of Intent (NOI) To Be Covered

Dischargers desiring coverage under this general NPDES permit must submit a Notice of Intent (NOI) which shall include the legal name and address of the operator, the location of the discharge (including the street address, if applicable, and the county of the facility for which the notification is submitted), the name of the receiving water, and a description of the facility(s) (including the types of petroleum products or fuels being distributed, whether contact storm water is discharged). This NOI must be submitted no later than 90 days after the effective date of this permit for existing discharges and, for new discharges, at least 30 days before beginning the discharge.

All notifications of intent to be covered and any subsequent reports shall be sent to the following address: Water Enforcement Branch (6EN–WC), U.S. Environmental Protection Agency, Region 6, P.O. Box 50625, Dallas, TX 75250.

Upon receipt of the notification, EPA will notify the facility of its specific facility identification number that must be used on all correspondence with the Agency.

3. Termination of Operations

When all discharges associated with activities authorized by this permit are eliminated, or when the operator of the discharge associated with activity at a facility changes, the operator of the facility must submit a Notice of Termination that is signed in accordance with Part II.D.11 of this permit. The Notice of Termination shall include the following information: legal name, mailing address and telephone number of the operator; the facility identification number assigned by the Agency; and the location of the discharge.

Section B. Individual Permits

1. Any operator authorized by this permit may request to be excluded from the coverage under this general permit by applying for an individual permit. The operator shall submit an application together with the reasons supporting the request to the Regional Administrator.

2. When an individual NPDES permit is issued to an operator otherwise subject to this general permit, the applicability of the general permit to the permittee is automatically terminated on the effective date of the individual permit.

Section C. General Permit Limits

Parameter	Daily max limit	Sample type	Monitoring frequency
Flow	N/A	Estimate	Daily
Total Petroleum Hydrocarbons	15 mg/l	Grab	1/week (3)
Benzene	0.05 mg/l	Grab	1/week (3)
Total BTEX (1)	0.5 mg/l	Grab	1/week (3)
Total Lead (2)	0.25 mg/l	Grab	1/week (3)
pH	6.0—9.0 Std. Units	Grab	1/week (3)

Notes to table:

If discharge occurs less frequently than the minimum monitoring frequency, monitoring shall be conducted for each discharge event. For a discharge consisting of contact storm water only, the sample shall be obtained within 60 minutes after discharge begins.

(1) The sum of benzene, toluene, ethyl benzene and xylene.

(2) The monitoring requirements for lead will be once per year upon the permittee's submission of a certification that none of the substances stored at the facility include refined petroleum products or petroleum fuels containing lead or lead additives. If at a later date, refined petroleum products or petroleum fuels containing lead or lead additives are stored, the permittee must notify the regulatory agency and the lead monitoring frequency will become once per week.

(3) If compliance with a limit is demonstrated for a period of two years, the minimum frequency shall be reduced to once per two weeks upon the permittee's submission of a certification of such compliance. If a subsequent non compliance occurs, the frequency shall revert to once per week.

	Monthly average Limit (mg/l)	Daily max Limit (mg/l)	Single grab Limit (mg/l)
Arsenic*	.1	.2	.3
Barium*	1.0	2.0	4.0
Cadmium* (Inland Waters)	.05	.1	.2
Cadmium* (Tidal Waters)	.1	.2	.3
Chromium*	.5	1.0	5.0
Copper*	.5	1.0	2.0
Manganese*	1.0	2.0	3.0
Mercury*	.005	.005	.01
Nickel*	1.0	2.0	3.0
Selenium* (Inland Waters)	.05	.1	.2
Selenium* (Tidal Waters)	.1	.2	.3
Silver*	.05	.1	.2
Zinc*	1.0	2.0	6.0

* Monitoring frequency shall be a minimum of once per year using grab samples.

There shall be no discharge of floating solids or visible foam in other than trace amounts and no discharge of visible oil.

There shall be no acute toxicity as determined by requiring greater than 50% survival in 100% effluent using a 24 hour acute test. See Section I.F of this permit. Monitoring shall be a minimum of once per year using grab samples. See Section I.D of this permit.

Permittees are prohibited from causing or allowing any activity pursuant to this permit which would be in violation of Title 30 Texas Administrative Code, Chapter 213 (Edwards Aquifer Rules).

Section D. Monitoring at Substantially Identical Storm Water Outfalls

Note: The requirements of this section apply to storm water only outfalls. They do not apply to outfalls containing facility waste water.

When a facility has two or more storm water outfalls that, based on a consideration of industrial activity, significant materials, and management practices and activities within the area drained by the outfall, the permittee reasonably believes discharge substantially identical effluents, the permittee may collect a sample of effluent of one of such outfalls and report that the examination data also applies to the substantially identical outfalls provided that the permittee includes in the storm water pollution prevention plan a description of the location of the outfalls and explains in detail why the outfalls are expected to discharge substantially identical effluents. In addition, for each outfall that the permittee believes is representative, an estimate of the size of the drainage area (in square feet) and an estimate of the runoff coefficient of the drainage area (e.g., low (under 40%), medium (40 to 65%), or high (above 65%)) shall be provided in the plan.

Section E. Pollution Prevention Plan

A Pollution Prevention Plan shall be prepared and implemented for each facility covered by this permit. The plan shall identify potential sources of pollution that may reasonably be expected to affect the quality of contact storm water discharges from the facility. In addition, the plan shall describe and ensure the implementation of practices that are to be used to reduce the pollutants in contact storm water discharges at the facility and to assure compliance with the terms and conditions of this permit. Facilities must implement the provisions of the storm water pollution prevention plan as a condition of this permit.

The plan shall be signed in accordance with Part II of the permit (Signatory Requirements) and be retained onsite at the facility that generates the storm water discharge in accordance with Part II (Retention of Records) of the permit.

The Director, or authorized representative, may notify the permittee at any time that the plan does not meet one or more of the minimum requirements of this part. Such notification shall identify those provisions of the permit that are not being met by the plan, and identify which provisions of the plan requires modifications in order to meet the minimum requirements of this part. Within 30 days of such notification, the permittee shall make the required changes to the plan and shall submit to the Director a written certification that the requested changes have been made.

The permittee shall amend the plan whenever there is a change in design, construction, operation, or maintenance, that has a significant effect on the potential for the discharge of pollutants to waters of the United States or if the storm water pollution prevention plan proves to be ineffective in eliminating or significantly minimizing pollutants from sources identified in the contents of the plan, or in otherwise achieving the general objectives of controlling pollutants in the contact storm water discharges.

The plan shall include, at a minimum, the following items:

1. Pollution Prevention Team. Each plan shall identify a specific individual or individuals within the facility organization as members of a storm water Pollution Prevention Team that are responsible for developing the storm water pollution prevention plan and assisting the facility or plant manager in its implementation, maintenance and revision. The plan shall clearly identify the responsibilities of each team member. The activities and responsibilities of the team shall address all aspects of the facility's storm water pollution prevention plan.

2. Description of Potential Pollutant Sources. Each plan shall provide a description of potential sources that may reasonably be expected to add significant amounts of pollutants to storm water discharges or that may result in the discharge of pollutants during dry weather from separate storm sewers draining the facility. Each plan shall identify all activities and significant materials that may potentially be significant pollutant sources. Each plan shall include, at a minimum:

a. Drainage. A site map indicating the location of each point of discharge of storm water associated with industrial activity, an outline of the portions of the drainage area of each storm water outfall that are within the facility boundaries with a prediction of the direction of flow, each existing structural control measure to reduce pollutants in storm water runoff, surface water bodies, locations where significant materials are exposed to precipitation, locations where major spills or leaks identified under Part C (Spills and Leaks), below, have occurred, and the locations of the following activities where such activities are exposed to precipitation: fueling stations, vehicle and equipment maintenance and/or cleaning areas, storage areas for vehicles and equipment with actual or potential fluid leaks, loading/unloading areas, locations used for the treatment, storage or disposal of wastes, liquid storage tanks, processing areas, storage areas and all monitoring locations. The site map must also indicate the types of discharges contained in the drainage areas of the outfalls. In order to increase the readability of the map, the inventory of the types of discharges contained in each outfall may be kept as an attachment to the site map.

b. Inventory of Exposed Materials. An inventory of the types of materials handled at the site that potentially may be exposed to precipitation. Such inventory shall include a narrative description of significant materials that have been handled, treated, stored or disposed in a manner to allow exposure to storm water between the time of 3 years prior to the date of the submission of a Notice of Intent (NOI) to be covered under this permit and the present; method and location of onsite storage or disposal; dirt or gravel parking areas for storage of vehicles to be maintained; materials management practices employed to minimize contact of materials with storm water runoff between the time of 3 years prior to the date of the submission of a Notice of Intent (NOI) to be covered under this permit and the present; the location and a description of existing structural and nonstructural control measures to reduce pollutants in storm water runoff; and a description of any treatment the storm water receives.

c. Spills and Leaks. A list of significant spills and significant leaks of toxic or hazardous pollutants that occurred at areas that are exposed to precipitation or that otherwise drain to a storm water conveyance at the facility after the date of 3 years prior to the date of the submission of a Notice of Intent (NOI) to be covered under this permit.

Such list shall be updated as appropriate during the term of the permit.

d. Sampling Data. A summary of existing discharge sampling data describing pollutants in storm water discharges from the facility, including a summary of sampling data collected during the term of this permit.

e. Risk Identification and Summary of Potential Pollutant Sources. A narrative description of the potential pollutant sources from the following activities associated with vehicle and equipment maintenance and equipment cleaning: fueling stations; maintenance shops; equipment or vehicle cleaning areas; paved dirt or gravel parking areas for vehicles to be maintained; loading and unloading operations, outdoor storage activities, outdoor manufacturing or processing activities, significant dust or particulate generating processes, and onsite waste disposal practices. The description shall specifically list any significant potential source of pollutants at the site and, for each potential source, any pollutant or pollutant parameter (for example, oil and grease, etc.) of concern shall be identified.

3. Measures and Controls. Each facility covered by this permit shall develop a description of storm water management controls appropriate for the facility, and implement such controls. The appropriateness and priorities of controls in a plan shall reflect identified potential sources of pollutants at the facility. The description of storm water management controls shall address the following minimum components, including a schedule for implementing such controls:

a. Good Housekeeping. Good housekeeping requires the maintenance of areas that may contribute pollutants to storm water discharges in a clean, orderly manner. The following areas must be specifically addressed:

(i) Vehicle and Equipment Storage Areas—The storage of vehicles and equipment awaiting maintenance with actual or potential fluid leaks must be confined to designated areas (delineated on the site map). The plan must describe measures that prevent or minimize contamination of the storm water runoff from these areas. The facility shall consider the use of drip pans under vehicles and equipment, indoor storage of the vehicles and equipment, installation of berming and diking of this area, use of absorbents, roofing or covering storage areas, cleaning pavement surface to remove oil and grease, or other equivalent methods.

(ii) fueling Areas—The plan must describe measures to prevent or minimize contamination of the storm water runoff from fueling areas. The facility shall consider covering the fueling area, using spill and overflow protection and cleanup equipment, minimizing runon/runoff of storm water to the fueling area, using dry cleanup methods, collecting the storm water runoff and providing treatment or recycling, or other equivalent measures.

(iii) Material Storage Areas—Storage units of all materials must be maintained in good condition, so as to prevent contamination of storm water, and plainly labeled. The plan must describe measures that prevent or minimize contamination of the storm water runoff from such storage areas. The facility shall consider indoor storage of the materials, installation of berming and diking of the areas, minimizing runon/runoff of storm water to the areas, using dry cleanup methods, collecting the storm water runoff and providing treatment or other equivalent methods.

(iv) Vehicle and Equipment Cleaning Areas—The plan must describe measures that prevent or minimize contamination of the storm water runoff from all areas used for vehicle and equipment cleaning. The facility shall consider performing all cleaning operations indoors, covering the cleaning operation, ensuring that all washwaters drain to the intended collection system, collecting the storm water runoff from the cleaning area and providing treatment or recycling or other equivalent measures.

(v) Vehicle and Equipment Maintenance Areas—The plan must describe measures to prevent or minimize contamination of the storm water runoff from all areas used for vehicle and equipment maintenance. The facility shall consider performing all maintenance activities indoors, using drip pans, maintaining an organized inventory of materials used in the ship, draining all parts of fluids prior to disposal, prohibiting wet clean up practices where the practices would result in the discharge of pollutants to storm water drainage systems, using dry cleanup methods, collecting the storm water runoff from the maintenance area and providing treatment or recycling, minimizing runon/runoff of storm water areas or other equivalent measures.

b. Preventive Maintenance. A preventive maintenance program shall involve routine inspection and maintenance of storm water management devices (for example, cleaning oil/water separators, catch basins, drip pans, vehicle-mounted drip containment devices) as well as inspecting and testing facility equipment and systems to uncover conditions that could cause breakdowns or failures resulting in discharges of pollutants to surface waters, and ensuring appropriate maintenance of such equipment and systems.

c. Spill Prevention and Response Procedures. Areas where potential spills that can contribute pollutants to storm water discharges can occur, and their accompanying drainage points, shall be identified clearly in the storm water pollution prevention plan. Where appropriate, specifying material handling procedures, storage requirements, and use of equipment such as diversion valves in the plan should be considered. Procedures for cleaning up spills shall be identified in the plan and made available to the appropriate personnel. The necessary equipment to implement a clean up should be available to personnel.

d. Inspections. Qualified facility personnel shall be identified to inspect designated equipment and areas of the facility on a quarterly basis. The following areas shall be included in all inspections: storage area for vehicles and equipment awaiting maintenance, fueling areas, vehicle and equipment maintenance areas (both indoors and outdoors), material storage areas, vehicle and equipment cleaning areas, and loading and unloading areas. Follow-up procedures shall be used to ensure that appropriate actions are taken in response to the inspections. Records of inspections shall be maintained. The use of a checklist should be considered by the facility.

e. Employee Training. Employee training programs shall inform personnel responsible for implementing activities identified in the storm water pollution prevention plan or otherwise responsible for storm water management of the components and goals of the storm water pollution prevention plan. Training should address topics such as spill response, good housekeeping, and material management practices. The pollution prevention plan shall identify how often training will take place; at a minimum, training must be held annually (once per calendar year).

f. Record Keeping and Internal Reporting Procedures. A description of incidents (such as spills, or other discharges), along with other information describing the quality and quantity of storm water discharges shall be included in the plan required under this part. Inspections and maintenance activities shall be documented and records of such activities shall be incorporated into the plan.

g. Sediment and Erosion Control. The plan shall identify areas that, due to

topography, activities, or other factors, have a high potential for significant soil erosion, and identify structural, vegetative, and/or stabilization measures to be used to limit erosion.

h. Management of Runoff. The plan shall contain a narrative consideration of the appropriateness of traditional storm water management practices (practices other than those that control the generation or source(s) of pollutants) used to divert, infiltrate, reuse, or otherwise manage storm water runoff in a manner that reduces pollutants in storm water discharges from the site. The plan shall provide that measures that the permittee determines to be reasonable and appropriate shall be implemented and maintained. The potential of various sources at the facility to contribute pollutants to storm water discharges (see Item 2 of this section—Description of Potential Pollutant Sources) shall be considered when determining reasonable and appropriate measures. Appropriate measures may include: vegetative swales and practices, reuse of collected storm water (such as for a process or as an irrigation source), inlet controls (such as oil/water separators), snow management activities, infiltration devices, and wet detention/retention devices.

4. Comprehensive Site Compliance Evaluation. Qualified personnel shall conduct site compliance evaluations at appropriate intervals specified in the plan, but, in no case less than once a year. Such evaluations shall provide:

a. Areas contributing to contact storm water discharges shall be visually inspected for evidence of, or the potential for, pollutants entering the drainage system. Measures to reduce pollutant loadings shall be evaluated to determine whether they are adequate and properly implemented in accordance with the terms of the permit or whether additional control measures are needed. Structural storm water management measures, sediment and erosion control measures, and other structural pollution prevention measures, such as recycle ponds, identified in the plan shall be observed to ensure that they are operating correctly. A visual inspection of equipment needed to implement the plan, such as spill response equipment, shall be made.

b. Based on the results of the evaluation, the description of potential pollutant sources identified in the plan in accordance with Item 2 of this section (Description of Potential Pollutant Sources) and pollution prevention measures and controls identified in the plan in accordance with Item 3 of this section (Measures and Controls) shall be revised as appropriate within 2 weeks of such evaluation and shall provide for implementation of any changes to the plan in a timely manner, but in no case more than 12 weeks after the evaluation.

c. A report summarizing the scope of the evaluation, personnel making the evaluation, the date(s) of the evaluation, major observations relating to the implementation of the storm water pollution prevention plan, and actions taken in accordance with Item 4.b, above, shall be made and retained as part of the storm water pollution prevention plan for at least 3 years after the date of the evaluation. The report shall identify any incidents of noncompliance. Where a report does not identify any incidents of noncompliance, the report shall contain a certification that the facility is in compliance with the storm water pollution prevention plan and this permit. The report shall be signed in accordance with signatory requirements of the permit.

d. Where compliance evaluation schedules overlap with inspections required under Item 3.d, above, the compliance evaluation may be conducted in place of one such inspection.

Section F. Whole Effluent Toxicity Testing

24-Hour Acute Testing for Discharges Into Fresh Receiving Waters

1. Scope and Methodology

a. The following test species shall be used:

Daphnia pulex and *pimephales promelas* (Fathead minnow) acute static nonrenewal 24-hour toxicity tests. Use ''Methods for Measuring the Acute Toxicity of Effluents and Receiving Waters to Freshwater and Marine Organisms'' (EPA/600/4–90/027F) or the latest update thereof. A minimum of 5 replicates with 8 organisms per replicate must be used in the control and in each effluent dilution of this test.

b. The permittee shall test the effluent for lethality in accordance with the provisions of this section. Such testing will determine if an effluent sample meets the requirement of greater than 50% survival of the appropriate test organisms in 100% effluent for a 24-hour period.

c. The permittee shall submit the results of these tests on the Discharge Monitoring Report.

d. In addition to an appropriate control (0% effluent), a 100% effluent concentration shall be used in the toxicity tests.

2. Required Toxicity Testing Conditions

a. Control/dilution water—Control and/or dilution water used in the test shall normally consist of a standard, synthetic, moderately hard, reconstituted water of similar pH and alkalinity to the closest downstream perennial water.

b. Control Survival—If more than 10% of the test organisms in any control die within 24 hours, that test including the control and the 100% effluent shall be repeated with all results from both tests reported as required in Item 3, below, of this section.

c. The permittee shall repeat a test, including the control and all effluent dilutions, if the procedures and quality assurance requirements defined in the test methods or in this permit are not satisfied. A repeat test shall be conducted within the required reporting period of any test determined to be invalid, in accordance with Item 2.b of this section.

d. Sample Collection and Preservation—Samples shall be collected at a point following the last treatment unit. One flow-weighted composite sample representative of normal operating flows will be collected from each outfall, and a discrete test will be run on each composite sample. Samples shall be chilled to 4 degrees Centigrade during collection, shipping, and/or storage. The toxicity tests must be initiated within 36 hours after collection of the sample. The composite sample must be collected such that the sample is representative of any periodic episode of chlorination, biocide usage, or other potentially toxic substance discharged on an intermittent basis.

3. Reporting

a. The permittee shall prepare a full report of the results of all tests conducted pursuant to this Part in accordance with the Report Preparation section of EPA/600/4–90/027F for every valid or invalid toxicity test initiated, whether carried to completion or not. The permittee shall retain each full report pursuant to the provisions of Part II.C.3 of this permit. The permittee shall submit the information contained in any full report upon the specific request of the Agency.

b. The permittee shall report the following results of each toxicity test on the DMR in accordance with Part II.D.4 of this permit:

For *pimephales promelas* (Parameter No. TIE6D) and for daphnia pulex (Parameter No. TIE3D) enter the following codes on the DMR:

''0'' if mean survival at 24 hours is greater than 50% in 100% effluent;

''1'' if the mean survival at 24 hours is less than or equal to 50% in 100% effluent.

24-Hour Acute Testing for Discharges Into Marine Receiving Waters

1. Scope and Methodology

a. The following test species shall be used:

Mysidopsis bahia (Mysid shrimp) and *menidia beryllina* (Inland Silverside minnow) acute static nonrenewal 24-hour toxicity test. Use ''Methods for Measuring the Acute Toxicity of Effluents and Receiving Waters to Freshwater and Marine Organisms'' (EPA/600/4–90/027F) or the latest update thereof. A minimum of 5 replicates with 8 organisms per replicate must be used in the control and in each effluent dilution of this test.

b. The permittee shall test the effluent for lethality in accordance with the provisions of this section. Such testing will determine if an effluent sample meets the requirement of greater than 50% survival of the appropriate test organisms in 100% effluent for a 24-hour period.

c. The permittee shall submit the results of these tests on the Discharge Monitoring Report.

d. In addition to an appropriate control (0% effluent), a 100% effluent concentration shall be used in the toxicity tests.

2. Required Toxicity Testing Conditions

a. Control/dilution water—Control and/or dilution water used in the test shall normally consist of a standard, synthetic, reconstituted seawater.

b. Control Survival—If more than 10% of the test organisms in any control die within 24 hours, that test including the control and the 100% effluent shall be repeated with all results from both tests reported as required in Item 3, below, of this section.

c. Repeat Test—the permittee shall repeat a test, including the control and all effluent dilutions, if the procedures and quality assurance requirements defined in the test methods or in this permit are not satisfied. A repeat test shall be conducted within the required reporting period of any test determined to be invalid, in accordance with Item 2.b of this section.

d. Sample Collection and Preservation—Samples shall be collected at a point following the last treatment unit. One flow-weighted composite sample representative of normal operating flows will be collected from each outfall, and a discrete test will be run on each composite sample. Samples shall be chilled to 4 degrees Centigrade during collection, shipping, and/or storage. The toxicity tests must be initiated within 36 hours after collection of the sample. The composite sample must be collected such that the sample is representative of any periodic episode of chlorination, biocide usage, or other potentially toxic substance discharged on an intermittent basis.

3. Reporting

a. The permittee shall prepare a full report of the results of all tests conducted pursuant to this Part in accordance with the Report Preparation section of EPA/600/4–90/027F for every valid or invalid toxicity test initiated, whether carried to completion or not. The permittee shall retain each full report pursuant to the provisions of Part II.C.3 of this permit. The permittee shall submit the information contained in any full report upon the specific request of the Agency.

b. The permittee shall report the following results of each toxicity test on the DMR in accordance with Part II.D.4 of this permit:

For menidia beryllina (Parameter No. TIE6B) and mysidopsis bahia (Parameter No. TIE3E), enter the following codes on the DMR:

''0'' if mean survival at 24 hours is greater than 50% in 100% effluent;

''1'' if the mean survival at 24 hours is less than or equal to 50% in 100% effluent.

Part II

Section A. General Conditions

1. Introduction

In accordance with the provisions of 40 CFR Part 122.41, et. seq., this permit incorporates by reference ALL conditions and requirements applicable to NPDES Permits set forth in the Clean Water Act, as amended, (hereinafter known as the ''Act'') as well as ALL applicable regulations.

2. Duty To Comply

The permittee must comply with all conditions of this permit. Any permit noncompliance constitutes a violation of the Act and is grounds for enforcement action, for terminating coverage under this permit, or for requiring a permittee to apply for and obtain an individual NPDES permit.

3. Toxic Pollutants

a. Notwithstanding Part II.A.4, if any toxic effluent standard or prohibition (including any schedule of compliance specified in such effluent standard or prohibition) is promulgated under Section 307(a) of the Act for a toxic pollutant which is present in the discharge and that standard or prohibition is more stringent than any limitation on the pollutant in this permit, this permit shall be modified or revoked and reissued to conform to the toxic effluent standard or prohibition.

b. The permittee shall comply with effluent standards or prohibitions established under Section 307(a) of the Act for toxic pollutants within the time provided in the regulations that established those standards or prohibitions, even if the permit has not yet been modified to incorporate the requirement.

4. Permit Flexibility

This permit may be modified, revoked and reissued, or terminated for cause in accordance with 40 CFR 122.62–64. The filing of a request for a permit modification, revocation and reissuance, or termination, or a notification of planned changes or anticipated noncompliance, does not stay any permit condition.

5. Property Rights

This permit does not convey any property rights of any sort, or any exclusive privilege.

6. Duty To Provide Information

The permittee shall furnish to the Director, within a reasonable time, any information which the Director may request to determine whether cause exists for modifying, revoking and reissuing, or terminating this permit, or to determine compliance with this permit. The permittee shall also furnish to the Director, upon request, copies of records required to be kept by this permit.

7. Criminal and Civil Liability

Except as provided in permit conditions on ''Bypassing'' and ''Upsets'', nothing in this permit shall be construed to relieve the permittee from civil or criminal penalties for noncompliance. Any false or materially misleading representation or concealment of information required to be reported by the provisions of the permit, the Act, or applicable regulations, which avoids or effectively defeats the regulatory purpose of the Permit may subject the Permittee to criminal enforcement pursuant to 18 U.S.C. Section 1001.

8. Oil and Hazardous Substance Liability

Nothing in this permit shall be construed to preclude the institution of any legal action or relieve the permittee from any responsibilities, liabilities, or penalties to which the permittee is or

may be subject under Section 311 of the Act.

9. State Laws

Nothing in this permit shall be construed to preclude the institution of any legal action or relieve the permittee from any responsibilities, liabilities, or penalties established pursuant to any applicable State law or regulation under authority preserved by Section 510 of the Act.

10. Severability

The provisions of this permit are severable, and if any provision of this permit or the application of any provision of this permit to any circumstance is held invalid, the application of such provision to other circumstances, and the remainder of this permit, shall not be affected thereby.

Section B. Proper Operation and Maintenance

1. Need To Halt or Reduce Not a Defense

It shall not be a defense for a permittee in an enforcement action that it would have been necessary to halt or reduce the permitted activity in order to maintain compliance with the conditions of this permit. The permittee is responsible for maintaining adequate safeguards to prevent the discharge of untreated or inadequately treated wastes during electrical power failure either by means of alternate power sources, standby generators or retention of inadequately treated effluent.

2. Duty To Mitigate

The permittee shall take all reasonable steps to minimize or prevent any discharge in violation of this permit which has a reasonable likelihood of adversely affecting human health or the environment.

3. Proper Operation and Maintenance

a. The permittee shall at all times properly operate and maintain all facilities and systems of treatment and control (and related appurtenances) which are installed or used by permittee as efficiently as possible and in a manner which will minimize upsets and discharges of excessive pollutants and will achieve compliance with the conditions of this permit. Proper operation and maintenance also includes adequate laboratory controls and appropriate quality assurance procedures. This provision requires the operation of backup or auxiliary facilities or similar systems which are installed by a permittee only when the operation is necessary to achieve compliance with the conditions of this permit.

b. The permittee shall provide an adequate operating staff which is duly qualified to carry out operation, maintenance and testing functions required to insure compliance with the conditions of this permit.

4. Bypass of Treatment Facilities

a. Bypass Not Exceeding Limitations

The permittee may allow any bypass to occur which does not cause effluent limitations to be exceeded, but only if it also is for essential maintenance to assure efficient operation. These bypasses are not subject to the provisions of Parts II.B.4.b. and 4.c.

b. Notice

(1) Anticipated Bypass. If the permittee knows in advance of the need for a bypass, it shall submit prior notice, if possible at least ten days before the date of the bypass.

(2) Unanticipated Bypass. The permittee shall, within 24 hours, submit notice of an unanticipated bypass as required in Part II.D.7.

c. Prohibition of Bypass

(1) Bypass is prohibited, and the Director may take enforcement action against a permittee for bypass, unless:

(a) Bypass was unavoidable to prevent loss of life, personal injury, or severe property damage;

(b) There were no feasible alternatives to the bypass, such as the use of auxiliary treatment facilities, retention of untreated wastes, or maintenance during normal periods of equipment downtime. This condition is not satisfied if adequate back-up equipment should have been installed in the exercise of reasonable engineering judgment to prevent a bypass which occurred during normal periods of equipment downtime or preventive maintenance; and,

(c) The permittee submitted notices as required by Part II.B.4.b.

(2) The Director may allow an anticipated bypass after considering its adverse effects, if the Director determines that it will meet the three conditions listed at Part II.B.4.c(1).

5. Upset Conditions

a. Effect of an Upset

An upset constitutes an affirmative defense to an action brought for noncompliance with such technology-based permit effluent limitations if the requirements of Part II.B.5.b. are met. No determination made during administrative review of claims that noncompliance was caused by upset, and before an action for noncompliance, is final administrative action subject to judicial review.

b. Conditions Necessary For a Demonstration of Upset

A permittee who wishes to establish the affirmative defense of upset shall demonstrate, through properly signed, contemporaneous operating logs, or other relevant evidence that:

(1) An upset occurred and that the permittee can identify the cause(s) of the upset;

(2) The permitted facility was at the time being properly operated;

(3) The permittee submitted notice of the upset as required by Part II.D.7; and,

(4) The permittee complied with any remedial measures required by Part II.B.2.

c. Burden of Proof

In any enforcement proceeding, the permittee seeking to establish the occurrence of an upset has the burden of proof.

6. Removed Substances

Unless otherwise authorized, solids, sewage sludges, filter backwash, or other pollutants removed in the course of treatment or waste water control shall be disposed of in a manner such as to prevent any pollutant from such materials from entering navigable waters.

Section C. Monitoring and Records

1. Inspection and Entry

The permittee shall allow the Director, or an authorized representative, upon the presentation of credentials and other documents as may be required by the law to:

a. Enter upon the permittee's premises where a regulated facility or activity is located or conducted, or where records must be kept under the conditions of this permit;

b. Have access to and copy, at reasonable times, any records that must be kept under the conditions of this permit;

c. Inspect at reasonable times any facilities, equipment (including monitoring and control equipment), practices or operations regulated or required under this permit; and

d. Sample or monitor at reasonable times, for the purpose of assuring permit compliance or as otherwise authorized by the Act, any substances or parameters at any location.

2. Representative Sampling

Samples and measurements taken for the purpose of monitoring shall be representative of the monitored activity.

3. Retention of Records

The permittee shall retain records of all monitoring information, including all calibration and maintenance records and all original strip chart recordings for continuous monitoring instrumentation, copies of all reports required by this permit, and records of all data used to complete the application for this permit, for a period of at least 3 years from the date of the sample, measurement, report, or application. This period may be extended by request of the Director at any time.

4. Record Contents

Records of monitoring information shall include:

a. The date, exact place, and time of sampling or measurements;

b. The individual(s) who performed the sampling or measurements;

c. The date(s) and time(s) analyses were performed;

d. The individual(s) who performed the analyses;

e. The analytical techniques or methods used; and

f. The results of such analyses.

5. Monitoring Procedures

a. Monitoring must be conducted according to test procedures approved under 40 CFR Part 136, unless other test procedures have been specified in this permit or approved by the Regional Administrator.

b. The permittee shall calibrate and perform maintenance procedures on all monitoring and analytical instruments at intervals frequent enough to insure accuracy of measurements and shall maintain appropriate records of such activities.

c. An adequate analytical quality control program, including the analyses of sufficient standards, spikes, and duplicate samples to insure the accuracy of all required analytical results shall be maintained by the permittee or designated commercial laboratory.

Section D. Reporting Requirements

1. Planned Changes

The permittee shall give notice to the Director as soon as possible of any planned physical alterations or additions to the permitted facility. Notice is required only when:

(1) The alteration or addition to a permitted facility may meet one of the criteria for determining whether a facility is a new source in 40 CFR Part 122.29(b); or,

(2) The alteration or addition could significantly change the nature or increase the quantity of pollutants discharged. This notification applies to pollutants which are subject neither to effluent limitations in the permit, nor to notification requirements listed at Part II.D.10.a.

2. Anticipated Noncompliance

The permittee shall give advance notice to the Director of any planned changes in the permitted facility or activity which may result in noncompliance with permit requirements.

3. Transfers

Coverage under these permits is not transferable to any person except after notice to the Director.

4. Discharge Monitoring Reports and Other Reports

Monitoring results obtained during the previous 12 months for all discharges at a facility shall be summarized and reported to EPA and the appropriate State agency on the 28th day of the month following the end of the twelve month period on Discharge Monitoring Report (DMR) Form EPA No. 3320–1 in accordance with the ''General Instructions'' provided on the form. The permittee shall submit the original DMR signed and certified as required by Part II.D.11 and all other reports required by Part II.D. to the EPA at the address below: Compliance Assurance and Enforcement Division, Water Enforcement Branch (6EN–W), U.S. Environmental Protection Agency, Region 6, P.O. Box 50625, Dallas, TX 75250.

5. Additional Monitoring by the Permittee

If the permittee monitors any pollutant more frequently than required by this permit, using test procedures approved under 40 CFR Part 136 or as specified in this permit, the results of this monitoring shall be included in the calculation and reporting of the data submitted in the Discharge Monitoring Report (DMR). Such increased monitoring frequency shall also be indicated on the DMR.

6. Averaging of Measurements

Calculations for all limitations which require averaging of measurements shall utilize an arithmetic mean unless otherwise specified by the Director in the permit.

7. Twenty-four Hour Reporting

a. The permittee shall report any noncompliance which may endanger health or the environment. Any information shall be provided orally to the EPA Region 6 24-hour voice mail box telephone number 214–665–6593 within 24 hours from the time the permittee becomes aware of the circumstances. A written submission shall be provided within 5 days of the time the permittee becomes aware of the circumstances. The report shall contain the following information:

(1) A description of the noncompliance and its cause;

(2) The period of noncompliance including exact dates and times, and if the noncompliance has not been corrected, the anticipated time it is expected to continue; and, (3) Steps being taken to reduce, eliminate, and prevent recurrence of the noncomplying discharge.

b. The following shall be included as information which must be reported within 24 hours:

(1) Any unanticipated bypass which exceeds any effluent limitation in the permit;

(2) Any upset which exceeds any effluent limitation in the permit; and,

(3) Violation of a maximum daily discharge limitation for any pollutants listed by the Director in Part II of the permit to be reported within 24 hours.

c. The Director may waive the written report on a case-by-case basis if the oral report has been received within 24 hours.

8. Other Noncompliance

The permittee shall report all instances of noncompliance not reported under Parts II.D.4 and D.7 and Part I.C at the time monitoring reports are submitted. The reports shall contain the information listed at Part II.D.7.

9. Other Information

Where the permittee becomes aware that it failed to submit any relevant facts in a permit application, or submitted incorrect information in a permit application or in any report to the Director, it shall promptly submit such facts or information.

10. Changes in Discharges of Toxic Substances

The permittee shall notify the Director as soon as it knows or has reason to believe:

a. That any activity has occurred or will occur which would result in the discharge, on a routine or frequent basis, of any toxic pollutant listed at 40 CFR Part 122, Appendix D, Tables II and III (excluding Total Phenols) which is not limited in the permit, if that discharge will exceed the highest of the following ''notification levels'':

(1) One hundred micrograms per liter (100 ug/L);

(2) Two hundred micrograms per liter (200 ug/L) for acrolein and acrylonitrile;

five hundred micrograms per liter (500 ug/L) for 2,4-dinitro-phenol and for 2-methyl-4,6-dinitrophenol; and one milligram per liter (1 mg/L) for antimony;

(3) Five (5) times the maximum concentration value reported for that pollutant in the permit application; or

(4) The level established by the Director.

b. That any activity has occurred or will occur which would result in any discharge, on a non routine or infrequent basis, of a toxic pollutant which is not limited in the permit, if that discharge will exceed the highest of the following ''notification levels'':

(1) Five hundred micrograms per liter (500 ug/L);

(2) One milligram per liter (1 mg/L) for antimony;

(3) Ten (10) times the maximum concentration value reported for that pollutant in the permit application; or

(4) The level established by the Director.

11. Signatory Requirements

All applications, reports, or information submitted to the Director shall be signed and certified.

a. All Permit Applications Shall Be Signed as Follows

(1) by a responsible corporate officer. For the purpose of this section, a responsible corporate officer means:

(a) A president, secretary, treasurer, or vice-president of the corporation in charge of a principal business function, or any other person who performs similar policy or decision making functions for the corporation; or,

(b) For a Corporation—The manager of one or more manufacturing, production, or operating facilities employing more than 250 persons or having gross annual sales or expenditures exceeding $25 million (in second-quarter 1980 dollars), if authority to sign documents has been assigned or delegated to the manager in accordance with corporate procedures.

(2) For a Partnership or Sole Proprietorship—by a general partner or the proprietor, respectively.

b. All Reports required by the permit and other information requested by the Director shall be signed by a person described above or by a duly authorized representative of that person. A person is a duly authorized representative only if:

(1) The authorization is made in writing by a person described above;

(2) The authorization specifies either an individual or a position having responsibility for the overall operation of the regulated facility or activity, such as the position of plant manager, operator of a well or a well field, superintendent, or position of equivalent responsibility, or an individual or position having overall responsibility for environmental matters for the company. A duly authorized representative may thus be either a named individual or an individual occupying a named position; and,

(3) The written authorization is submitted to the Director.

c. Certification

Any person signing a document under this section shall make the following certification:

''I certify under penalty of law that this document and all attachments were prepared under my direction or supervision in accordance with a system designed to assure that qualified personnel properly gather and evaluate the information submitted. Based on my inquiry of the person or persons who manage the system, or those persons directly responsible for gathering the information, the information submitted is, to the best of my knowledge and belief, true, accurate, and complete. I am aware that there are significant penalties for submitting false information, including the possibility of fine and imprisonment for knowing violations.''

12. Availability of Reports

Except for applications, effluent data, permits, and other data specified in 40 CFR 122.7, any information submitted pursuant to this permit may be claimed as confidential by the submitter. If no claim is made at the time of submission, information may be made available to the public without further notice.

Section E. Penalties for Violations of Permit Conditions

1. Criminal

a. Negligent Violations

The Act provides that any person who negligently violates permit conditions implementing sections 301, 302, 306, 307, 308, 318, or 405 of the Act is subject to a fine of not less than $2,500 nor more than $25,000 per day of violation, or by imprisonment for not more than 1 year, or both.

b. Knowing Violations

The Act provides that any person who knowingly violates permit conditions implementing sections 301, 302, 306, 307, 308, 318, or 405 of the Act is subject to a fine of not less than $5,000 nor more than $50,000 per day of violation, or by imprisonment for not more than 3 years, or both.

c. Knowing Endangerment

The Act provides that any person who knowingly violates permit conditions implementing sections 301, 302, 303, 306, 307, 308, 318, or 405 of the Act and who knows at that time that he is placing another person in imminent danger of death or serious bodily injury is subject to a fine of not more than $250,000, or by imprisonment for not more than 15 years, or both.

d. False Statements

The Act provides that any person who knowingly makes any false material statement, representation, or certification in any application, record, report, plan, or other document filed or required to be maintained under the Act or who knowingly falsifies, tampers with, or renders inaccurate, any monitoring device or method required to be maintained under the Act, shall upon conviction, be punished by a fine of not more than $10,000, or by imprisonment for not more than 2 years, or by both. If a conviction of a person is for a violation committed after a first conviction of such person under this paragraph, punishment shall be by a fine of not more than $20,000 per day of violation, or by imprisonment of not more than 4 years, or by both. (See section 309.c.4 of the Clean Water Act)

2. Civil Penalties

The Act provides that any person who violates a permit condition implementing sections 301, 302, 306, 307, 308, 318, or 405 of the Act is subject to a civil penalty not to exceed $27,500 per day for each violation.

3. Administrative Penalties

The Act provides that any person who violates a permit condition implementing Sections 301, 302, 306, 307, 308, 318, or 405 of the Act is subject to an administrative penalty, as follows:

a. Class I Penalty

Not to exceed $11,000 per violation nor shall the maximum amount exceed $27,500.

b. Class II Penalty

Not to exceed $11,000 per day for each day during which the violation continues nor shall the maximum amount exceed $137,500.

Section F. Definitions

All definitions contained in Section 502 of the Act shall apply to this permit and are incorporated herein by reference. Unless otherwise specified in this permit, additional definitions of

words or phrases used in this permit are as follows:

1. *Act* means the Clean Water Act (33 U.S.C. 1251 et. seq.), as amended.

2. *Administrator* means the Administrator of the U.S. Environmental Protection Agency.

3. *Applicable Effluent Standards and Limitations* means all state and Federal effluent standards and limitations to which a discharge is subject under the Act, including, but not limited to, effluent limitations, standards or performance, toxic effluent standards and prohibitions, and pretreatment standards.

4. *Applicable Water Quality Standards* means all water quality standards to which a discharge is subject under the Act.

5. *Bypass* means the intentional diversion of waste streams from any portion of a treatment facility.

6. *Contact Storm Water* means storm water which comes in contact with any raw material, product, by-product, co-product intermediate, petroleum fuel, or waste material.

7. *Daily Max* discharge limitation means the highest allowable ''daily discharge'' during the calendar month.

8. *Director* means the U.S. Environmental Protection Agency Regional Administrator or an authorized representative.

9. *Domestic Sewage* means waterborne human or animal waste and waste from domestic activities, such as washing, bathing and food preparation.

10. *Environmental Protection Agency* means the U.S. Environmental Protection Agency.

12. *Facility* (as defined in 40 CFR 122.2) means any NPDES ''point source'' or any other facility or activity that is subject to regulation under the NPDES program.

13. *Facility Waste Water* means any liquids which are accidentally released from storage, transfer or loading facilities, liquids from equipment cleaning or vehicle maintenance, any water and hydrocarbon mixtures drawn from waste water associated with petroleum fuel handling. Facility waste water shall not include domestic sewage.

14. *Grab Sample* means an individual sample collected in less than 15 minutes.

15. *National Pollutant Discharge Elimination System* means the national program for issuing, modifying, revoking and reissuing, terminating, monitoring and enforcing permits, and imposing and enforcing pretreatment requirements, under Sections 307, 318, 402, and 405 of the Act.

16. *Petroleum Bulk Stations and Terminals* mean establishments primarily engaged in the cooperative or wholesale distribution of refined petroleum products or petroleum fuels from bulk liquid storage facilities.

17. *Petroleum Fuel* means gasoline, diesel fuel, fuel oil, fuel additives, kerosene and jet fuel, or any other petroleum-based material having physical and chemical properties similar to the listed materials.

18. *Severe Property Damage* means substantial physical damage to property, damage to the treatment facilities which causes them to become inoperable, or substantial and permanent loss of natural resources which can reasonably be expected to occur in the absence of a bypass. Severe property damage does not mean economic loss caused by delays in production.

19. *Upset* means an exceptional incident in which there is unintentional and temporary noncompliance with technology-based permit effluent limitations because of factors beyond the reasonable control of the permittee. An upset does not include noncompliance to the extent caused by operational error, improperly designed treatment facilities, inadequate treatment facilities, lack of preventive maintenance, or careless or improper operation.

20. The term ''MGD'' shall mean million gallons per day.

21. The term ''mg/L'' shall mean milligrams per liter or parts per million (ppm).

[FR Doc. 99–15977 Filed 6–24–99; 8:45 am]

BILLING CODE 6560–50–P

FEDERAL COMMUNICATIONS COMMISSION

[CC Docket No. 96–98; DA 99–1198]

Requests for Additional Authority To Implement Telecommunications Numbering Conservation Measures

AGENCY: Federal Communications Commission.

ACTION: Notice.

SUMMARY: On June 22, 1999, the Commission released a public notice requesting public comment on several petitions from state utility commissions requesting additional authority to implement measures related to conservation of telecommunications numbering resources. The intended effect of this action is to make the public aware of, and to seek public comment on, these requests.

FOR FURTHER INFORMATION CONTACT: Al McCloud at (202) 418–2320 or amccloud@fcc.gov. The address is: Network Services Division, Common Carrier Bureau, Federal Communications Commission, The Portals, 445 Twelfth Street, S.W., Suite 6–A320, Washington, D.C. 20554. The fax number is: (202) 418–2345. The TTY number is: (202) 418–0484.

SUPPLEMENTARY INFORMATION: Released: June 22, 1999.

On September 28, 1998, the Federal Communications Commission (''Commission'') released an order in the matter of a Petition for Declaratory Ruling and Request for Expedited Action on the July 15, 1997 Order of the Pennsylvania Public Utility Commission Regarding Area Codes 412, 610, 215, and 717, and Implementation of the Local Competition Provisions of the Telecommunications Act of 1996, *Memorandum Opinion and Order and Order on Reconsideration*, FCC 98–224, CC Docket No. 96–98, 63 FR 63613, NSD File No. L–97–42 (rel. September 28, 1998) (''Pennsylvania Numbering Order''). The Pennsylvania Numbering Order delegated additional authority to state public utility commissions to order NXX code rationing, under certain circumstances, in jeopardy situations and encouraged state commissions to seek further limited delegations of authority to implement other innovative number conservation methods.

Several state utility commissions have filed requests for additional delegations of authority to implement number conservation methods in their states. *See* Common Carrier Bureau Seeks Comment on a Petition of the California Public Utilities Commission and the People of the State of California for an Additional Delegation of Authority to Conduct NXX Code Rationing, *Public Notice*, NSD File No. L–98–136, DA 99–108 (rel. Jan. 6, 1999); Common Carrier Bureau Seeks Comment on Massachusetts Department of Telecommunications and Energy Request for Additional Authority to Implement Various Area Code Conservation Measures in the 508, 617, 781, and 978 Area Codes, *Public Notice*, NSD File No. L–99–19, DA 99–461 (rel. Mar. 5, 1999); Common Carrier Bureau Seeks Comment on New York Department of Public Service Petition for Additional Authority to Implement Number Conservation Measures, *Public Notice*, NSD File No. L–99–21, DA 99–462 (rel. Mar. 5, 1999); Common Carrier Bureau Seeks Comment on the Maine Public Utilities Commission's Petition for Additional Authority to Implement Number Conservation Measures, *Public*

Notice, NSD File No. L–99–27, DA 99–638 (rel. Apr. 1, 1999); Common Carrier Bureau Seeks Comment on the Florida Public Service Commission's Petition for Authority to Implement Number Conservation Measures, *Public Notice*, NSD File No. 99–33, DA 99–725 (rel. Apr. 15, 1999); Common Carrier Bureau Seeks Comment on a Petition of the California Public Utilities Commission and the People of the State of California for a Delegation of Additional Authority Pertaining to Area Code Relief and to NXX Code Conservation Measures, *Public Notice*, NSD File No. L–98–928, DA 99–108 (rel. May 14, 1999).

Among other things, the state commissions have sought authority to implement number pooling trials in their states (thousands-block pooling, individual telephone number pooling, and unassigned number porting); to adopt number-assignment standards (including establishing fill rates as a criterion for the allocation of NXX codes, assigning numbers sequentially, certifying the readiness of carriers' facilities prior to assigning NXX codes, and engaging in audits to assure carriers are abiding by these standards as well as industry number-assignment guidelines); to maintain rationing of NXX codes for a period of six months following NPA relief; to hear and address claims of carriers seeking numbering resources outside of NXX rationing plans; to order the return of unused or reserved NXX codes to the NANPA; to implement extended local calling areas, inconsistent rate centers, and NXX code sharing; and to expand the deployment of permanent local number portability. The comment periods for all of the proceedings referenced above have closed, except for the second petition from the California Commission, for which the comment period closes on June 28, 1999.

Many of the delegations of authority sought by the state commissions relate to issues under consideration in the *Numbering Resource Optimization Notice*. Numbering Resource Optimization, *Notice of Proposed Rulemaking*, CC Docket No. 99–200, FCC 99–122 (rel. June 2, 1999), 64 FR 32471. Because the state utility commissions which have petitioned us face immediate concerns regarding the administration of telecommunication numbering resources in their states, we find it to be in the public interest to address these petitions as expeditiously as possible, prior to completing the rulemaking proceeding.

We hereby seek comment on the issues raised in the state utility commissions' petitions for delegated authority to implement various number conservation measures. A copy of these petitions will be available during regular business hours at the FCC Reference Center, Portals II, 445 12th Street, S.W., Suite CY–A257, Washington, D.C. 20554, (202) 418–0267.

We will give full consideration to the comments and replies already filed on these matters. Therefore, parties which have already filed comments need not re-file their comments or replies.

Interested parties may file comments concerning these matters on or before July 16, 1999. All filings must reference the NSD File Number of the state petition which the commenting party wishes to address, and CC Docket 96–98. Send an original and four copies to the Commission Secretary, Magalie Roman Salas, Portals II, 445 12th Street, S.W., Suite TW–A325, Washington, D.C. 20554 and two copies to Al McCloud, Network Services Division, Portals II, 445 12th Street, S.W., Suite 6A–320, Washington, D.C. 20554.

Comments may be filed using the Commission's Electronic Comment Filing System (ECFS) or by filing paper copies. Comments filed through the ECFS can be sent as an electronic file via the Internet to <http://www.fcc.gov/e-file/ecfs.html>. Generally, only one copy of an electronic submission must be filed. If multiple docket or rulemaking numbers appear in the caption of this proceeding, however, commenters must transmit one electronic copy of the comments to each docket or rulemaking number referenced in the caption. In completing the transmittal screen, commenters should include their full name, Postal Service mailing address, and the applicable docket or rulemaking number. Parties may also submit an electronic comment by Internet e-mail. To get filing instructions for e-mail comments, commenters should send an e-mail to ecfs@fcc.gov, including ''get form <your e-mail address>'' in the body of the message. A sample form and directions will be sent in reply. Comments may be filed using the Commission's Electronic Comment Filing System (ECFS) or by filing paper copies.

This is a ''permit but disclose'' proceeding for purposes of the Commission's *ex parte* rules. *See generally* 47 CFR 1.1200–1.1216. As a ''permit but disclose'' proceeding, *ex parte* presentations will be governed by the procedures set forth in section 1.1206 of the Commission's rules applicable to non-restricted proceedings. 47 CFR 1.1206.

Parties making oral *ex parte* presentations are reminded that memoranda summarizing the presentation must contain a summary of the substance of the presentation and not merely a listing of the subjects discussed. More than a one or two sentence description of the views and arguments presented is generally required. See 47 CFR 1.1206(b)(2). Other rules pertaining to oral and written presentations are set forth in section 1.1206(b) as well. For further information contact Al McCloud of the Common Carrier Bureau, Network Services Division, at (202) 418–2320 or amccloud@fcc.gov. The TTY number is (202) 418–0484.

Federal Communications Commission.

Blaise A. Scinto,

Deputy Chief, Network Services Division, Common Carrier Bureau.

[FR Doc. 99–16225 Filed 6–24–99; 8:45 am]

BILLING CODE 6712–01–P

FEDERAL COMMUNICATIONS COMMISSION

[Report No. 2338]

Petitions for Reconsideration and Clarification of Action in Rulemaking Proceeding

June 10, 1999.

Petitions for Reconsideration have been filed in the Commission's rulemaking proceedings listed in this Public Notice and published pursuant to 47 CFR Section 1.429(e). The full text of these documents are available for viewing and copying in Room CY–A257, 445 12th Street, S.W., Washington, D.C. or may be purchased from the Commission's copy contractor, ITS, Inc. (202) 857–3800. Oppositions to these petitions must be filed by July 12, 1999. See Section 1.4(b)(1) of the Commission's rules (47 CFR 1.4(b)(1). Replies to an opposition must be filed within 10 days after the time for filing oppositions has expired.

Subject:

Computer III Further Remand Proceedings: Bell Operating Company Provision of Enhanced Services (CC Docket No. 95–20)

1998 Biennial Regulatory Review—Review of Computer III and ONA Safeguards and Requirements (CC Docket No. 98–10)

Number of Petitions Filed: 1.

Subject:

Development of Wireless Services Offering Advanced Telecommunications Services (CC Docket No. 98–147).

Number of Petitions Filed: 1.

Subject:

Implementation of Section 309(j) of the Communications Act—Competitive Bidding for Commercial Broadcast and Instructional Television Fixed Service Licenses (MM Docket No. 97–234)

Reexamination of the Policy Statement on Comparative Broadcast Hearings (GC Docket No. 92–52)

Proposals to Reform the Commission's Comparative Hearing Process to Expedite the Resolution of Cases (GEN. Docket No. 90–264)

Number of Petitions Filed: 2.

Federal Communications Commission.

Magalie Roman Salas,

Secretary.

[FR Doc. 99–16253 Filed 6–24–99; 8:45 am]

BILLING CODE 6712–01–M

FEDERAL EMERGENCY MANAGEMENT AGENCY

Agency Information Collection Activities: Submission for OMB Review; Comment Request

ACTION: Notice and request for comments.

SUMMARY: The Federal Emergency Management Agency is submitting a request for review and approval of a new information collection. This request is submitted under the emergency processing procedures in Office of Management and Budget (OMB) regulation 5 CFR 1320.13. FEMA is requesting that this information collection be approved by June 18, 1999 for the use through December 1999 due to the hurricane season that began June 1.

FEMA plans to follow this emergency request with a 3-year approval. The request will be processed under OMB's normal clearance procedures in accordance with the provisions of OMB regulation 5 CFR 1320.10. To help us with the timely processing of the emergency and normal clearance submissions to OMB, FEMA invites the general public to comment on the proposed collection of information. This notice and request for comments is in accordance with the provisions of the Paperwork Reduction Act of 1995 (44 U.S.C. 3506 (c)(2)(A)). It seeks comments concerning the collection of information to be used to establish a settlement on the amount the insured will receive under a National Flood Insurance Program (NFIP) policy for the cost of bringing a structure into compliance with floodplain management requirements. It will also be used to identify whether or not the insured qualifies for coverage under the Increased Cost of Compliance (ICC).

SUPPLEMENTARY INFORMATION. This collection is in accordance with FEMA responsibilities under Section 555 of Public Law 103–325 and is part of all NFIP policies newly issued or renewed on or after June 1, 1997. ICC coverage pays for expenses a property owner must incur above and beyond the cost to repair the physical damage the structure actually sustained from a flooding event to comply with State or local floodplain management ordinances or laws. Such expenses may include the cost of building elevation, floodproofing, relocation, demolition, or any combination. Policyholders with 3-year policies have the option of canceling their flood insurance policies on the anniversary date and obtaining ICC coverage under rewritten policies.

Collection of Information:

Title: Increased Cost of Compliance.

Type of Information Collection: New.

OMB Number: None.

Form Numbers. FEMA Form 81–99, Increased Cost of Compliance Proof of Loss; and FEMA Form 81–42A, Increased Cost of Compliance Adjuster Report.

Abstract. The National Flood Insurance Program, (NFIP) authorized by P.L. 90–448 (1968) and expanded by P.L. 93–234 (1973) provides low-cost Federally subsidized flood insurance for existing buildings exposed to flood risk. In return, communities must enact and administer construction safeguards to ensure that new construction in the floodplain will be built to eliminate or minimize future flood damage. In accordance with P.L. 93–234, the purchase of flood insurance is mandatory when Federal or Federally-related financial assistance is being provided for acquisition or construction of buildings located or to be located within FEMA-identified Special Flood Hazard Areas of communities which are participating in the Program. Section 555 of the National Flood Insurance Reform Act of 1994, Title V of the Riegle Community Development and Investment Act of 1994 (Public Law 103–325), requires the NFIP to provide the coverage under the Standard Flood Insurance Policy for the increased costs of complying with the land use and control measures established under section 1361 of the National Flood Insurance Act of 1968, as amended. FEMA Form 81–99, Increased Cost of Compliance (ICC) Proof of Loss will be used by the insured and adjuster to establish a settlement on the amount the insured will receive. FEMA Form 81–42A, Increased Cost of Compliance Adjuster Report will be used by the Adjuster to identify whether or not the insured qualifies for coverage under ICC. These forms are necessary for the continued proper performance of the Agency's functions related to indemnifying policyholders for flood damages to their properties.

Affected public: Individuals and households; Business or other for-profit; Not-for-profit institutions, and Farms.

Estimated Total Annual Burden Hours: 7,895.

FEMA forms	Number of respondents (A)	Frequency of response (B)	Hours per response (C)	Annual burden hours (A × B × C)
81–99	3,500	On Occasion	.25	875
81–42A	3,500	On Occasion	2	7,000
Total	3,500		2.25	7,875

Estimated Cost. $1,750,000.

Comments

Written comments are solicited to:

(a) evaluate whether the proposed data collections and reporting requirements are necessary for the proper performance of FEMA's functions and program activities, including whether the data have practical utility;

(b) evaluate the accuracy of the agency's estimate of the burden of the proposed data collections and reporting requirements;

(c) determine an estimated cost of the proposed data collections and reporting requirements to the respondents;

(d) enhance the quality, utility, and clarity of the information to be collected; and,

(e) minimize the burden of the collection of information on those who

are to respond, including through the use of appropriate automated, electronic, mechanical, or other technological collection techniques or other forms of information technology, *e.g.*, permitting electronic submission of responses.

OMB should receive comments concerning the approval of this collection of information under OMB's emergency processing procedures within 30 days of the date of this notice. FEMA will, however, continue to accept comments concerning this collection of information through August 24, 1999.

ADDRESSEE: Interested persons should submit written comments to the Office of Management and Budget, Office of Information and Regulatory Affairs, ATTN: Desk Officer for FEMA, 725 17th Street, NW, Room 10102, Washington DC 20503, or to the Federal Emergency Management Agency, ATTN: Information Collections Officer, 500 C Street, SW, Room 316, Washington, DC 20472.

FOR FURTHER INFORMATION CONTACT: For additional information contact Timothy P. Johnson, Federal Insurance Administration, at (202) 646–3418. For copies of the proposed collection of information contact Muriel B. Anderson at (202) 646–2625, FAX (202) 646–3524, or e-mail: muriel.anderson@fema.gov.

Dated: June 11, 1999.

Muriel B. Anderson,

Acting Director, Program Services Division, Operations Support Directorate.

[FR Doc. 99–16216 Filed 6–24–99; 8:45 am]

BILLING CODE 6718–01–P

FEDERAL RESERVE SYSTEM

Public Meeting: Application by Fleet Financial Group, Inc., Boston, Massachusetts, To Merge With BankBoston Corporation, Boston, MA

AGENCY: Federal Reserve System.

ACTION: Notice of Meeting.

SUMMARY: On July 7, 1999, a public meeting will be held regarding the notice submitted by the Fleet Financial Group, Inc., Boston, Massachusetts (Fleet Financial), to acquire BankBoston Corporation, Boston, Massachusetts (BankBoston), and its banking and nonbanking subsidiaries pursuant to the Bank Holding Company Act (BHC Act) and related statutes. The purpose of the public meeting is to collect information relating to factors the Board is required to consider under the BHC Act.

DATES: The Meeting will be held on Wednesday, July 7, 1999, at 9:00 a.m. EDT.

ADDRESSES: Federal Reserve Bank of Boston, 600 Atlantic Avenue, Boston, Massachusetts.

FOR FURTHER INFORMATION CONTACT: Robert M. Brady, Vice President, Federal Reserve Bank of Boston, 600 Atlantic Avenue, Boston, Massachusetts. Facsimile: 617/973–3219.

SUPPLEMENTARY INFORMATION: On May 17, 1999, Fleet Financial requested the Board's approval to merge with BankBoston under the BHC Act (12 U.S.C. 1841 *et seq.*) and related statutes. The factors the Board must consider in evaluating the proposal under the BHC Act are: the effects of the proposal on the financial and managerial resources and future prospects of the companies and banks involved in the proposal; competition in the relevant markets; and the convenience and needs of the communities to be served. With respect to competition, the proposal involves the merger of the two largest banking organizations in new England and will involve sizable divestitures throughout the region. Convenience and needs considerations include a review of the records of performance of Fleet Financial and BankBoston under the Community Reinvestment Act, which requires the Board to take into account in its review of a bank acquisition or merger proposal each institution's record of meeting the credit needs of its entire community, including low- and moderate-income neighborhoods, consistent with the safe and sound operation of the institution. 12 U.S.C. 2903.

The transaction also involves the proposed acquisition of a number of nonbanking companies engaged in activities permissible for bank holding companies. The Board must determine whether conducting the proposed nonbanking activities can reasonably be expected to produce benefits to the public that outweigh possible adverse effects, such as undue concentration of resources, decreased or unfair competition, conflicts of interest, or unsound banking practices.

Procedures for Hearing

Testimony at the public meeting will be presented to a panel consisting of a Presiding Officer and other panel members appointed by the Presiding Officer. In conducting the public meeting, the Presiding Officer will have the authority and discretion to ensure that the meeting proceeds in a fair and orderly manner. In contrast to a formal administrative hearing, the rules for taking evidence in an administrative proceeding will not apply to this public meeting. Panel members may question witnesses, but no cross-examination of witnesses will be permitted. The public meeting will be transcribed and information regarding procedures for obtaining a copy of the transcript will be announced at the public meeting.

On the basis of the requests received, the Presiding Officer will prepare a schedule for persons wishing to testify and establish the order of presentation. To ensure an opportunity for all interested commenters to present their views, the Presiding Officer may limit the time for presentation. Persons not listed on the schedule may be permitted to speak at the public meeting if time permits at the conclusion of the schedule of witnesses at the discretion of the Presiding Officer. Copies of testimony may, but need not, be filed with the Presiding Officer before a person's presentation.

Request To Testify

All persons wishing to testify at the public meeting must submit a written request to Robert M. Brady, Vice President, Federal Reserve Bank of Boston, 600 Atlantic Avenue, Boston, Massachusetts 02106 (facsimile: 617/973–3219), not later than 5:00 p.m. EDT, Wednesday, June 30, 1999. The request must include the following information: (i) A brief statement of the nature of the expected testimony and the estimated time required for the presentation; (ii) Address and telephone number (and facsimile number, if available) of the person testifying; and (iii) Identification of any special needs, such as from persons desiring translation services, persons with a physical disability who may need assistance, or persons requiring visual aids for their presentation. To the extent available, translators will be provided to persons wishing to present their views in a language other than English if this information is included in the request to testify. Persons interested only in attending the meeting do not need to submit a written request to attend.

By order of the Board of Governors of the Federal Reserve System, June 22, 1999.

Jennifer J. Johnson,

Secretary of the Board.

[FR Doc. 99–16299 Filed 6–24–99; 8:45 am]

BILLING CODE 6210–01–P

FEDERAL RESERVE SYSTEM

Change in Bank Control Notices; Acquisitions of Shares of Banks or Bank Holding Companies

The notificants listed below have applied under the Change in Bank

Control Act (12 U.S.C. 1817(j)) and § 225.41 of the Board's Regulation Y (12 CFR 225.41) to acquire a bank or bank holding company. The factors that are considered in acting on the notices are set forth in paragraph 7 of the Act (12 U.S.C. 1817(j)(7)).

The notices are available for immediate inspection at the Federal Reserve Bank indicated. The notices also will be available for inspection at the offices of the Board of Governors. Interested persons may express their views in writing to the Reserve Bank indicated for that notice or to the offices of the Board of Governors. Comments must be received not later than July 9, 1999.

A. Federal Reserve Bank of Atlanta (Lois Berthaume, Vice President) 104 Marietta Street, N.W., Atlanta, Georgia 30303-2713:

1. Mary M. Covington, Carrollton, Georgia; to retain voting shares of First Haralson Corporation, Buchanan, Georgia, and thereby indirectly retain voting shares of First National Bank of Georgia, Buchanan, Georgia.

Board of Governors of the Federal Reserve System, June 21, 1999.

Jennifer J. Johnson,

Secretary of the Board.

[FR Doc. 99–16169 Filed 6–24–99; 8:45 am]

BILLING CODE 6210–01–F

FEDERAL RESERVE SYSTEM

Formations of, Acquisitions by, and Mergers of Bank Holding Companies

The companies listed in this notice have applied to the Board for approval, pursuant to the Bank Holding Company Act of 1956 (12 U.S.C. 1841 *et seq.*) (BHC Act), Regulation Y (12 CFR Part 225), and all other applicable statutes and regulations to become a bank holding company and/or to acquire the assets or the ownership of, control of, or the power to vote shares of a bank or bank holding company and all of the banks and nonbanking companies owned by the bank holding company, including the companies listed below.

The applications listed below, as well as other related filings required by the Board, are available for immediate inspection at the Federal Reserve Bank indicated. The application also will be available for inspection at the offices of the Board of Governors. Interested persons may express their views in writing on the standards enumerated in the BHC Act (12 U.S.C. 1842(c)). If the proposal also involves the acquisition of a nonbanking company, the review also includes whether the acquisition of the nonbanking company complies with the standards in section 4 of the BHC Act (12 U.S.C. 1843). Unless otherwise noted, nonbanking activities will be conducted throughout the United States.

Unless otherwise noted, comments regarding each of these applications must be received at the Reserve Bank indicated or the offices of the Board of Governors not later than July 19, 1999.

A. Federal Reserve Bank of Chicago (Philip Jackson, Applications Officer) 230 South LaSalle Street, Chicago, Illinois 60690-1413:

1. Pilot Grove Savings Bank Employee Stock Ownership Plan, Pilot Grove, Iowa; to acquire an additional 1.82 percent of the voting shares of Pilot Bancorp, Inc., Pilot Grove, Iowa, and thereby indirectly acquire additional shares of Pilot Grove Savings Bank, Pilot Grove, Iowa.

Board of Governors of the Federal Reserve System, June 21, 1999.

Jennifer J. Johnson,

Secretary of the Board.

[FR Doc. 99–16171 Filed 6–24–99; 8:45 am]

BILLING CODE 6210–01–F

FEDERAL RESERVE SYSTEM

Notice of Proposals to Engage in Permissible Nonbanking Activities or to Acquire Companies that are Engaged in Permissible Nonbanking Activities

The companies listed in this notice have given notice under section 4 of the Bank Holding Company Act (12 U.S.C. 1843) (BHC Act) and Regulation Y, (12 CFR Part 225) to engage *de novo*, or to acquire or control voting securities or assets of a company, including the companies listed below, that engages either directly or through a subsidiary or other company, in a nonbanking activity that is listed in § 225.28 of Regulation Y (12 CFR 225.28) or that the Board has determined by Order to be closely related to banking and permissible for bank holding companies. Unless otherwise noted, these activities will be conducted throughout the United States.

Each notice is available for inspection at the Federal Reserve Bank indicated. The notice also will be available for inspection at the offices of the Board of Governors. Interested persons may express their views in writing on the question whether the proposal complies with the standards of section 4 of the BHC Act.

Unless otherwise noted, comments regarding the applications must be received at the Reserve Bank indicated or the offices of the Board of Governors not later than July 9, 1999.

A. Federal Reserve Bank of New York (Betsy Buttrill White, Senior Vice President) 33 Liberty Street, New York, New York 10045-0001:

1. Credit Lyonnais, Paris, France; to engage *de novo* through its subsidiary, Credit Lyonnais/PK Airfinance, Senningerberg, Luxembourg, in asset management, servicing and collection activities, pursuant to § 225.28(b)(2)(vi) of Regulation Y; financial and investment advisory activities, pursuant to § 225.28(b)(6) of Regulation Y; and data processing activities, pursuant to § 225.28(b)(14) of Regulation Y.

B. Federal Reserve Bank of Chicago (Philip Jackson, Applications Officer) 230 South LaSalle Street, Chicago, Illinois 60690-1413:

1. Mahaska Investment Company, Oskaloosa, Iowa; to acquire Midwest Bancshares, Inc., Burlington, Iowa, and thereby indirectly acquire Midwest Federal Savings & Loan Association, Burlington, Iowa, and thereby engage in operating a savings and loan association, pursuant to § 225.28(b)(4)(ii) of Regulation Y.

C. Federal Reserve Bank of San Francisco (Maria Villanueva, Manager of Analytical Support, Consumer Regulation Group) 101 Market Street, San Francisco, California 94105-1579:

1. Dai-Ichi Kangyo Bank, Limited, Tokyo, Japan; to acquire Yasuda Bank and Trust Company (U.S.A), Toronto, Canada, and thereby engage in performing functions or activities that may be performed by a trust company, pursuant to § 225.28(b)(5) of Regulation Y.

Board of Governors of the Federal Reserve System, June 21, 1999.

Jennifer J. Johnson,

Secretary of the Board.

[FR Doc. 99–16170 Filed 6–24–99; 8:45 am]

BILLING CODE 6210–01–F

DEPARTMENT OF HEALTH AND HUMAN SERVICES

Office of the Secretary

Notice of a Cooperative Agreement With Minority Access, Inc.

The Office of Minority Health (OMH), Office of Public Health and Science (OPHS) announces that it will enter into an umbrella cooperative agreement with the Minority Access, Inc., a national organization whose mission is to support individuals, institutions, Federal agencies, and corporations to diversify their campuses and work sites by improving the recruitment, retention, and enhancement of opportunities for minorities. This cooperative agreement

will establish the broad programmatic framework in which specific projects can be supported by various agencies during the project period.

The purpose of this cooperative agreement is to support the Minority Access, Inc. in providing assistance to minorities and minority-serving institutions in order to improve the higher educational, professional, and managerial employment of minorities.

The OMH will provide technical assistance and oversight as necessary for the implementation, conduct, and assessment of the project activities. On an as-needed basis, OMH will assist in arranging consultation from other Government agencies and non-governmental agencies.

Authorizing Legislation

This cooperative agreement is authorized under Section 1707(e)(1) of the Public Health Service Act, as amended.

Background

Assistance will be provided only to Minority Access, Inc. No other applications are being solicited under this announcement. The Minority Access, Inc., is uniquely qualified to accomplish the objectives of this cooperative agreement because it has the following combination of factors:

- This is the only organization whose mission is to serve minority-serving institutions, majority universities, as well as public and private entities with a large minority constituency.
- The organization has represented majority institutions and corporations in diversifying their campuses and work sites by improving the recruitment, retention, and enhancement of opportunities for minorities.
- The organization has established mutually beneficial partnerships between minority-serving institutions, majority institutions, and corporations.
- The organization has provided technical assistance to minorities and minority-serving institutions in order to improve the higher educational, professional, and managerial employment of minorities.
- The organization has developed strategies to enhance and develop minorities' educational skills to enter under-represented fields such as bio-medical research.

This cooperative agreement will be awarded for a 12-month budget period within a project period of five years. Depending upon the types of projects and availability of funds, it is anticipated that this cooperative agreement will receive approximately $50,000 to $100,000. Continuation awards within the project period will be made on the basis of satisfactory progress and the availability of funds.

The Catalog of Federal Domestic Assistance Number for this cooperative agreement is 93.004.

Where To Obtain Additional Information

If you are interested in obtaining additional information regarding this project, contact Ms. Cynthia Amis, Office of Minority Health, 5515 Security Lane, Suite 1000, Rockville, Maryland 20852 or telephone (301) 594–0769.

Dated: June 9, 1999.

Nathan Stinson, Jr.,

Acting Deputy Assistant Secretary for Minority Health.

[FR Doc. 99–16186 Filed 6–24–99; 8:45 am]

BILLING CODE 4160–17–M

DEPARTMENT OF HEALTH AND HUMAN SERVICES

Food and Drug Administration

[Docket No. 98N–0482]

Agency Information Collection Activities; Announcement of OMB Approval; Adverse Experience Reporting for Licensed Biological Products, and General Records

AGENCY: Food and Drug Administration, HHS.

ACTION: Notice.

SUMMARY: The Food and Drug Administration (FDA) is announcing that a collection of information entitled ''Adverse Experience Reporting for Licensed Biological Products, and General Records'' has been approved by the Office of Management and Budget (OMB) under the Paperwork Reduction Act of 1995.

FOR FURTHER INFORMATION CONTACT: JonnaLynn P. Capezzuto, Office of Information Resources Management (HFA–250), Food and Drug Administration, 5600 Fishers Lane, Rockville, MD 20857, 301–827–4659.

SUPPLEMENTARY INFORMATION: In the **Federal Register** of March 10, 1999 (64 FR 11920), the agency announced that the proposed information collection had been submitted to OMB for review and clearance under 44 U.S.C. 3507. An agency may not conduct or sponsor, and a person is not required to respond to, a collection of information unless it displays a currently valid OMB control number. OMB has now approved the information collection and has assigned OMB control number 0910–0308. The approval expires on May 31, 2001. A copy of the supporting statement for this information collection is available on the Internet at ''http://www.fda.gov/ohrms/dockets''.

Dated: June 18, 1999.

William K. Hubbard,

Acting Deputy Commissioner for Policy.

[FR Doc. 99–16148 Filed 6–24–99; 8:45 am]

BILLING CODE 4160–01–F

DEPARTMENT OF HEALTH AND HUMAN SERVICES

Food and Drug Administration

[Docket No. 99F–1912]

California Day-Fresh Foods, Inc.; Filing of Food Additive Petition

AGENCY: Food and Drug Administration, HHS.

ACTION: Notice.

SUMMARY: The Food and Drug Administration (FDA) is announcing that California Day-Fresh Foods, Inc., has filed a petition proposing that the food additive regulations be amended to provide for the safe use of ultraviolet light for the reduction of pathogens and other microorganisms in juice products.

FOR FURTHER INFORMATION CONTACT: William J. Trotter, Center for Food Safety and Applied Nutrition (HFS–206), Food and Drug Administration, 200 C St. SW., Washington, DC 20204, 202–418–3088.

SUPPLEMENTARY INFORMATION: Under the Federal Food, Drug, and Cosmetic Act (sec. 409(b)(5) (21 U.S.C. 348(b)(5))), notice is given that a food additive petition (FAP 9M4676) has been filed by California Day-Fresh Foods, Inc., 533 West Foothill Blvd., Glendora, CA 91741. The petition proposes that the food additive regulations in 21 CFR part 179—Irradiation in the Production, Processing, and Handling of Food be amended to provide for the safe use of ultraviolet light for the reduction of pathogens and other microorganisms in juice products.

The agency has determined under 21 CFR 25.32(j) that this action is of a type that does not individually or cumulatively have a significant effect on the human environment. Therefore, neither an environmental assessment nor an environmental impact statement is required.

Dated: June 9, 1999.

Alan M. Rulis,

Director, Office of Premarket Approval, Center for Food Safety and Applied Nutrition.

[FR Doc. 99–16146 Filed 6–24–99; 8:45 am]

BILLING CODE 4160–01–F

DEPARTMENT OF HEALTH AND HUMAN SERVICES

Food and Drug Administration

[Docket No. 97D–0444]

International Conference on Harmonisation; Guidance on the Duration of Chronic Toxicity Testing in Animals (Rodent and Nonrodent Toxicity Testing); Availability

AGENCY: Food and Drug Administration, HHS.

ACTION: Notice.

SUMMARY: The Food and Drug Administration (FDA) is publishing a guidance entitled ''S4A Duration of Chronic Toxicity Testing in Animals (Rodent and Nonrodent Toxicity Testing).'' The guidance was prepared under the auspices of the International Conference on Harmonisation of Technical Requirements for Registration of Pharmaceuticals for Human Use (ICH) and is intended to provide guidance on the duration of chronic toxicity testing in rodents and nonrodents as part of the safety evaluation of a drug product. FDA is also noting circumstances in which it may accept durations of chronic toxicity testing in nonrodents that differ from the duration generally recommended by ICH.

DATES: Effective June 25, 1999. Submit written comments at any time.

ADDRESSES: Submit written comments on the guidance to the Dockets Management Branch (HFA–305), Food and Drug Administration, 5630 Fishers Lane, rm. 1061, Rockville, MD 20852. Copies of the guidance are available from the Drug Information Branch (HFD–210), Center for Drug Evaluation and Research, Food and Drug Administration, 5600 Fishers Lane, Rockville, MD 20857, 301–827–4573. Single copies of the guidance may be obtained by mail from the Office of Communication, Training and Manufacturers Assistance (HFM–40), Center for Biologics Evaluation and Research (CBER), 1401 Rockville Pike, Rockville, MD 20852–1448, or by calling the CBER Voice Information System at 1–800–835–4709 or 301–827–1800. Copies may be obtained from CBER's FAX Information System at 1–888–CBER–FAX or 301–827–3844.

FOR FURTHER INFORMATION CONTACT:

Regarding the guidance: Joseph J. DeGeorge, Center for Drug Evaluation and Research (HFD–24), Food and Drug Administration, 5600 Fishers Lane, Rockville, MD 20857, 301–594–6758.

Regarding the ICH: Janet J. Showalter, Office of Health Affairs (HFY–20), Food and Drug Administration, 5600 Fishers Lane, Rockville, MD 20857, 301–827–0864.

SUPPLEMENTARY INFORMATION: In recent years, many important initiatives have been undertaken by regulatory authorities and industry associations to promote international harmonization of regulatory requirements. FDA has participated in many meetings designed to enhance harmonization and is committed to seeking scientifically based harmonized technical procedures for pharmaceutical development. One of the goals of harmonization is to identify and then reduce differences in technical requirements for drug development among regulatory agencies.

ICH was organized to provide an opportunity for tripartite harmonization initiatives to be developed with input from both regulatory and industry representatives. FDA also seeks input from consumer representatives and others. ICH is concerned with harmonization of technical requirements for the registration of pharmaceutical products among three regions: The European Union, Japan, and the United States. The six ICH sponsors are the European Commission, the European Federation of Pharmaceutical Industries Associations, the Japanese Ministry of Health and Welfare, the Japanese Pharmaceutical Manufacturers Association, the Centers for Drug Evaluation and Research and Biologics Evaluation and Research, FDA, and the Pharmaceutical Research and Manufacturers of America. The ICH Secretariat, which coordinates the preparation of documentation, is provided by the International Federation of Pharmaceutical Manufacturers Associations (IFPMA).

The ICH Steering Committee includes representatives from each of the ICH sponsors and the IFPMA, as well as observers from the World Health Organization, the Canadian Health Protection Branch, and the European Free Trade Area.

In the **Federal Register** of November 18, 1997 (62 FR 61513), FDA published a draft tripartite guidance entitled ''S4A Duration of Chronic Toxicity Testing in Animals (Rodent and Nonrodent Toxicity Testing).'' The notice gave interested persons an opportunity to submit comments by January 20, 1998.

There were no comments received and no revisions to the guidance. A final draft of the guidance was submitted to the ICH Steering Committee and endorsed by the three participating regulatory agencies on September 2, 1998.

In accordance with FDA's Good Guidance Practices (62 FR 8961, February 27, 1997), this document has been designated a guidance, rather than a guideline.

The document provides guidance on the duration of chronic toxicity testing in rodents and nonrodents as part of the safety evaluation of a drug product. The guidance is intended to help eliminate or reduce the need for pharmaceutical companies to duplicate testing in animals during the development of new drug products. The guidance is based on information currently available to the agency, and this information is available to the public in Docket No. 97D–0444.

This guidance represents the agency's current thinking on the duration of chronic toxicity testing in animals (rodent and nonrodent toxicity testing). It does not create or confer any rights for or on any person and does not operate to bind FDA or the public. An alternative approach may be used if such approach satisfies the requirements of the applicable statute, regulations, or both.

For guidance on biotechnology-derived pharmaceuticals, interested parties are advised to consult the ICH guidance ''S6 Preclinical Safety Evaluation of Biotechnology-Derived Pharmaceuticals'' (62 FR 61515, November 18, 1997).

FDA note on duration of chronic toxicity testing in nonrodents: The ICH guidance recommends 9-month chronic toxicity studies in nonrodents. FDA considers 9-month studies in nonrodents acceptable for most drug development programs, shorter studies may be equally acceptable in some circumstances and longer studies may be more appropriate in others, as follows:

- Six-month studies may be acceptable for indications of chronic conditions associated with short-term, intermittent drug exposure, such as bacterial infections, migraine, erectile dysfunction, and herpes.
- Six-month studies may be acceptable for drugs intended for indications for life-threatening diseases for which substantial long-term human clinical data are available, such as cancer chemotherapy in advanced disease or in adjuvant use.
- Twelve-month studies may be more appropriate for chronically used drugs to be approved on the basis of short-term clinical trials employing efficacy surrogate markers where safety data from humans are limited to short-term exposure, such as some acquired immunodeficiency syndrome (AIDS) therapies.

• Twelve-month studies may be more appropriate for new molecular entities acting at new molecular targets where postmarketing experience is not available for the pharmacological class. Thus, the therapeutic is the first in a pharmacological class for which there is limited human or animal experience on its long-term toxic potential.

As with all of FDA's guidances, the public is encouraged to submit written comments with new data or other new information pertinent to this guidance. The comments in the docket will be periodically reviewed, and, where appropriate, the guidance will be amended. The public will be notified of any such amendments through a notice in the **Federal Register**.

Interested persons may, at any time, submit written comments on the guidance to the Dockets Management Branch (address above). Two copies of any comments are to be submitted, except that individuals may submit one copy. Comments are to be identified with the docket number found in brackets in the heading of this document. The guidance and received comments may be seen in the office above between 9 a.m. and 4 p.m., Monday through Friday. An electronic version of this guidance is available on the Internet at ''http://www.fda.gov/cder/guidance/index.htm'' or at CBER's World Wide Web site at ''http://www.fda.gov/cber/publications.htm''.

The text of the guidance follows:

S4A Duration of Chronic Toxicity Testing in Animals (Rodent and Nonrodent Toxicity Testing)[1]

1. Objective

The objective of this guidance is to set out the considerations that apply to chronic toxicity testing in rodents and nonrodents as part of the safety evaluation of a medicinal product. Since guidance is not legally binding, an applicant may submit justification for an alternative approach.

2. Scope

This guidance has been prepared for the development of medicinal products with the exception of those already covered by the ICH guidance ''S6 Preclinical Safety Evaluation of Biotechnology-Derived Pharmaceuticals'' (62 FR 61515, November 18, 1997), e.g., monoclonal antibodies, recombinant DNA proteins.

3. Background

During the first International Conference on Harmonisation in 1991, the practices for the testing of chronic toxicity in the three regions (the European Union, Japan, and the United States) were reviewed. Arising from this, it emerged that there was a scientific consensus on the approach for chronic testing in rodents, supporting the harmonized duration of testing of 6 months. However, for chronic toxicity testing in nonrodents, there were different approaches to the duration of testing.

The lack of harmonized duration led to the need for pharmaceutical companies to perform partially duplicative studies for both 6 and 12 months' duration when developing new medicinal products. As the objective of ICH is to reduce or eliminate the need to duplicate testing during development of medicinal products and to ensure a more economical use of material, animal, and human resources, while at the same time maintaining safeguards to protect public health, further scientific evaluation was undertaken.

Each of the regulatory authorities in the European Union, Japan, and the United States undertook a review to determine whether a single duration for chronic toxicity testing in nonrodents could be identified. From this analysis, it emerged that in 16 cases a more detailed evaluation of 6 versus 12 months' data should be undertaken.

This evaluation was conducted as a joint exercise by the competent authorities in the three regions.

In some of the cases analyzed at the tripartite meetings, there were no additional findings at 12 months. For some other cases, there was not complete agreement among the regulators with respect to the comparability in study design and conduct to allow assessment of whether there were differences in the findings at 6 and 12 months due to duration of treatment alone.

In a number of cases there were findings observed by 12 months, but not by 6 months. It was concluded that these would, or could, have been detected in a study of 9 months' duration. Varying degrees of concern for the differences in findings detected between the studies of different durations were expressed. An agreement on the clinical relevance of these findings could not be reached.

Studies of 12 months' duration are usually not necessary, and studies of shorter than 9 months' duration may be sufficient.

In the European Union, studies of 6 months' duration in nonrodents are acceptable according to Council Directive 75/318/EEC, as amended. To avoid duplication, where studies with a longer duration have been conducted, it would not be necessary to conduct a study of 6 months.

4. Guidance on Duration of Chronic Toxicity Testing for Tripartite Development Plan

Arising from the extensive analysis and review of the above mentioned data in nonrodents and based upon the achievements of ICH 1 for testing in rodents, and so as to avoid duplication and follow a single development plan for chronic toxicity testing of new medicinal products, the following studies are considered acceptable for submission in the three regions:

(1) *Rodents*:A study of 6 months' duration;

(2) *Nonrodents*: A study of 9 months' duration.

[1] This guidance represents the agency's current thinking on the duration of chronic toxicity testing in animals (rodent and nonrodent toxicity testing). It does not create or confer any rights for or on any person and does not operate to bind FDA or the public. An alternative approach may be used if such approach satisifes the requirements of the applicable statute, regulations, or both.

Dated: June 17, 1999.

Margaret M. Dotzel,

Acting Associate Commissioner for Policy Coordination.

[FR Doc. 99–16189 Filed 6–24–99; 8:45 am]

BILLING CODE 4160–01–F

DEPARTMENT OF HEALTH AND HUMAN SERVICES

Food and Drug Administration

Blood Donor Suitability Workshop: Donor History of Hepatitis

AGENCY: Food and Drug Administration, HHS.

ACTION: Notice.

The Food and Drug Administration (FDA) is announcing the following public workshop entitled ''Blood Donor Suitability Workshop: Donor History of Hepatitis.'' The purpose of the workshop is to discuss whether prospective blood donors with a history of viral hepatitis should be deferred from donating blood.

Date and Time: The workshop will be held on Wednesday, July 21, 1999, 8:30 a.m. to 5 p.m.

Location: The workshop will be held at Natcher Auditorium, Bldg. 45, 45 Center Dr., National Institutes of Health, 8800 Rockville Pike, Bethesda, MD.

Contact: Joseph Wilczek, Center for Biologics Evaluation and Research (HFM–350), Food and Drug Administration, 1401 Rockville Pike, Rockville, MD 20852–1448, 301–827–6129, FAX 301–827–2843.

Registration: Early registration is recommended. Mail or fax registration information (including name, title, firm name, address, telephone, and fax number), to the contact person on or before Friday, July 2, 1999.

Registration at the site will be done on a space available basis on the day of the workshop beginning at 7:30 a.m. There is no registration fee for the workshop.

If you need special accommodations due to disability, please contact Joseph Wilczek at least 7 days in advance.

Agenda: The public workshop is intended to discuss a variety of issues concerning blood donor deferrals based on a history of viral hepatitis. These issues include, but are not limited to, the following: (1) Definitions and clarification of terms such as ''history of hepatitis'' and ''history of jaundice'' in the context of blood donation; (2) whether a prospective blood donor with a history of hepatitis A, who is anti-HAV IgG positive, is an unacceptable donor; (3) whether deferrals are appropriate for individuals with a

history of viral hepatitis that was documented to be due to some other virus other than hepatitis A through G; and (4) whether a history of hepatitis in the absence of positive viral marker tests for hepatitis preclude blood donations.

Transcripts: Transcripts of the workshop may be requested in writing from the Freedom of Information Office (HFI–35), Food and Drug Administration, 5600 Fishers Lane, rm. 12A–16, Rockville, MD 20857, approximately 15 days after the workshop at a cost of 10 cents per page. The workshop transcript will also be available on the Center for Biologics Evaluation and Research website at ''http://www.fda.gov/cber/minutes/workshop-min.htm''.

Dated: June 18, 1999.

William K. Hubbard,

Acting Deputy Commissioner for Policy.

[FR Doc. 99–16147 Filed 6–24–99; 8:45 am]

BILLING CODE 4160–01–F

DEPARTMENT OF HEALTH AND HUMAN SERVICES

National Institutes of Health

Electric and Magnetic Fields Research and Public Information Dissemination Program (EMFRAPID Program)

AGENCY: Environmental Toxicology Program, Office of Special Programs, National Institute of Environmental Health Sciences, National Institutes of Health.

Notice: Release of NIEHS Report on Electric and Magnetic Fields.

Background

The National Institute of Environmental Health Sciences (NIEHS) and the Department of Energy (DOE) coordinated implementation of the Electric and Magnetic Fields Research and Public Information Dissemination Program (EMF*RAPID* Program). This six-year program was mandated in the 1992 Energy Policy Act (PL 102–486, section 2118) and is designed to determine the potential effects on human disease from exposure to 60 Hz electric and magnetic fields (EMF). These fields are invisible lines of force that surround any wire or device that uses electricity. Additional details about the EMF*RAPID* Program are found in **Federal Register,** December 16, 1997 (Volume 62, No. 241, pp. 65814–65815).

Under this program, the NIEHS conducted a two-year review and analysis of the existing scientific data on EMF and prepared a report for the U.S. Congress that contains its conclusions from the health assessment. This assessment included an evaluation of the evidence by scientists both within and outside the field of EMF research as well as an opportunity for public comment through sponsorship of public meetings and solicitation written comments. The NIEHS report was released on June 15, 1999 and is available free-of-charge to the public and other interested parties.

The report is available in both PDF and HTML formats at the EMF*RAPID* Program world wide website, www.niehs.nih.gov/emfrapid/home.htm. Copies of the report can also be obtained by sending a request by fax: 919–541–0144 or mail: EMF–RAPID Program, NIEHS/NIH, P.O. Box 12233 MD EC–16, Research Triangle Park, NC 27709; or by calling 919–541–7534.

Dated: June 18, 1999.

Samuel H. Wilson,

Deputy Director, National Institute of Environmental Health Sciences.

[FR Doc. 99–16255 Filed 6–24–99; 8:45 am]

BILLING CODE 4140–01–M

DEPARTMENT OF HEALTH AND HUMAN SERVICES

Substance Abuse and Mental Health Services Administration

Agency Information Collection Activities: Submission for OMB Review; Comment Request

Periodically, the Substance Abuse and Mental Health Services Administration (SAMHSA) will publish a list of information collection requests under OMB review, in compliance with the Paperwork Reduction Act (44 U.S.C. Chapter 35). To request a copy of these documents, call the SAMHSA Reports Clearance Officer on (301) 443–7978.

Treatment Outcomes and Performance Pilot Studies (TOPPS)—(OMB No. 0930–0182; Extension)

The TOPPS program awarded contracts to 14 States to develop and pilot test performance and outcomes measures for substance abuse treatment services. The pilot studies are collecting data from substance abuse clients, including pregnant women, women with dependent children, adolescents, and managed care clients. Measures of addiction severity and other outcomes are being obtained at admission, discharge and post-discharge. These States were granted OMB clearance on data collection until September 30, 1999. SAMHSA is requesting an extension of OMB approval for one of these States, Utah, to allow them to complete data collection. The estimated burden for this extension is summarized below.

	Number of respondents	Responses/respondent	Average burden/ response (hrs.)	Annualized total burden (hrs.)
All States, currently approved (includes Utah)	(6,419)	2.0	.51	(6,551)
Utah—extension	420	2.9	.20	246
Revised Total	420			246

Written comments and recommendations concerning the proposed information collection should be sent within 30 days of this notice to: Daniel Chenok, Human Resources and Housing Branch, Office of Management and Budget, New Executive Office Building, Room 10235, Washington, D.C. 20503.

Dated: June 19, 1999.

Richard Kopanda,

Executive Officer, SAMHSA.

[FR Doc. 99–16174 Filed 6–24–99; 8:45 am]

BILLING CODE 4162–20–P

DEPARTMENT OF HOUSING AND URBAN DEVELOPMENT

[Docket No. FR–4432–N–25]

Federal Property Suitable as Facilities To Assist the Homeless

AGENCY: Office of the Assistant Secretary for Community Planning and Development, HUD.

ACTION: Notice.

SUMMARY: This Notice identifies unutilized, underutilized, excess, and surplus Federal property reviewed by HUD for suitability for possible use to assist the homeless.

FOR FURTHER INFORMATION CONTACT: Mark Johnston, room 7256, Department of Housing and Urban Development, 451 Seventh Street SW, Washington, DC 20410; telephone (202) 708–1226; TTY number for the hearing- and speech-impaired (202) 708–2565 (these telephone numbers are not toll-free), or call the toll-free Title V information line at 1–800–927–7588.

SUPPLEMENTARY INFORMATION: In accordance with 24 CFR part 581 and section 501 of the Stewart B. McKinney Homeless Assistance Act (42 U.S.C. 11411), as amended, HUD is publishing this Notice to identify Federal buildings and other real property that HUD has reviewed for suitability for use to assist the homeless. The properties were reviewed using information provided to HUD by Federal landholding agencies regarding unutilized and underutilized buildings and real property controlled by such agencies or by GSA regarding its inventory of excess or surplus Federal property. This Notice is also published in order to comply with the December 12, 1998 Court Order in *National Coalition for the Homeless* v. *Veterans Administration*, No. 88–2503–OG (D.D.C.).

Properties reviewed are listed in this Notice according to the following categories: Suitable/available, suitable/unavailable, suitable/to be excess, and unsuitable. The properties listed in the three suitable categories have been reviewed by the landholding agencies, and each agency has transmitted to HUD: (1) Its intention to make the property available for use to assist the homeless, (2) its intention to declare the property excess to the agency's needs, or (3) a statement of the reasons that the property cannot be declared excess or made available for use as facilities to assist the homeless.

Properties listed as suitable/available will be available exclusively for homeless use for a period of 60 days from the date of this Notice. Homeless assistance providers interested in any such property should send a written expression of interest to HHS, addressed to Brian Rooney, Division of Property Management, Program Support Center, HHS, room 5B–41, 5600 Fishers Lane, Rockville, MD 20857; (301) 443–2265. (This is not a toll-free number.) HHS will mail to the interested provider an application packet, which will include instructions for completing the application. In order to maximize the opportunity to utilize a suitable property, providers should submit their written expressions of interest as soon as possible. For complete details concerning the processing of applications, the reader is encouraged to refer to the interim rule governing this program, 24 CFR part 581.

For properties listed as suitable/to be excess, that property may, if subsequently accepted as excess by GSA, be made available for use by the homeless in accordance with applicable law, subject to screening for other Federal use. At the appropriate time, HUD will publish the property in a Notice showing it as either suitable/available or suitable/unavailable.

For properties listed as suitable/unavailable, the landholding agency has decided that the property cannot be declared excess or made available for use to assist the homeless, and the property will not be available.

Properties listed as unsuitable will not be made available for any other purpose for 20 days from the date of this notice. Homeless assistance providers interested in a review by HUD of the determination of unsuitability should call the toll free information line at 1–800–927–7588 for detailed instructions or write a letter to Mark Johnston at the address listed at the beginning of this Notice. Included in the request for review should be the property address (including zip code), the date of publication in the **Federal Register**, the landholding agency, and the property number.

For more information regarding particular properties identified in this Notice (*i.e.*, acreage, floor plan, existing sanitary facilities, exact street address), providers should contact the appropriate landholding agencies at the following addresses. AIR FORCE: Ms. Barbara Jenkins, Air Force Real Estate Agency, (Area-MI), Bolling Air Force Base, 112 Luke Avenue, Suite 104, Building 5683, Washington, DC 20332–8020; (202) 767–4184; COE: Ms. Shirley Middleswarth, Army Corps of Engineers, Management & Disposal Division, Pulaski Building, Room 4224, 20 Massachusetts Avenue, NW, Washington, DC 20314–1000; (202) 761–0515; GSA: Mr. Brian K. Polly, Assistant Commissioner, General Services Administration, Office of Property Disposal, 18th and F Streets, NW, Washington, DC 20405; (202) 501–0052; NAVY: Mr. Charles C. Cocks, Department of the Navy, Director, Real Estate Policy Division, Naval Facilities Engineering Command, Washington, Navy Yard, 1322 Patterson Ave., SE, Suite 1000, Washington, DC 20374–5065; (202) 685–9200; (These are not toll-free numbers).

Dated: June 17, 1999.

Fred Karnas, Jr.,

Deputy Assistant Secretary for Economic Development.

Title V, Federal Surplus Property Program Federal Register Report for 6/25/99

Suitable/Available Properties

Buildings (by State)

Indiana

Former Army Reserve Center
White Oak Park
LaPorte Co: Laporte IN 00000–
Landholding Agency: GSA
Propert6y Number: 54199920003
Status: Excess
Comment: Two—1600 sq. ft. picnic shelters, 4358 sq. ft. paved road, 200 sq. ft. rest room
GSA Number: 1–GR(1)–IN–430E

Kentucky

Site 11
Cannelton Locks and Dams
Brandenburg Co: Meade KY 40108–
Landholding Agency: GSA
Property Number: 54199920004
Status: Surplus
Comment: 320 sq. ft. comfort station on approx. 33.40 acres, most recent use—recreation/park, subject to complete flooding
GSA Number: 4–D–KY–539

New York

Bldgs. 1106 & 184 acres
Forestport Test Annex
Forestport Co: Oneida NY 13338–
Landholding Agency: Air Force
Property Number: 18199920028
Status: Unutilized

Comment: 11,760 sq. ft. on 184 acres, most recent use—research lab, presence of asbestos/lead paint/endangered species

Bldg. 1105
Forestport Test Annex
Forestport Co: Oneida NY 13338–
Landholding Agency: Air Force
Property Number: 18199920029
Status: Unutilized
Comment: 1920 sq. ft., most recent use—cold rsch. equip. storage, presence of asbestos/lead paint

Bldg. 1452 & 297 acres
AVA Test Annex
Town of Ava Co: Oneida NY 13303–
Landholding Agency: Air Force
Property Number: 18199920030
Status: Unutilized
Comment: 11,000 sq. ft. on 297 acres (67 acres of wetland), most recent use—electronic research testing, presence of asbestos/lead paint

Bldg. 1453
AVA Test Annex
Town of Ava Co: Oneida NY 13303–
Landholding Agency: Air Force
Property Number: 18199920031
Status: Unutilized
Comment: 266 sq. ft., most recent use—generator bldg., presence of asbestos

Bldg. 1454
AVA Test Annex
Town of Ava Co: Oneida NY 13303–
Landholding Agency: Air Force
Property Number: 18199920032
Status: Unutilized
Comment: 53 sq. ft., most recent use—switch station, presence of asbestos

Virginia

Structure NH–201
Atlantic Fleet Hdqts.
Support Activity
Norfolk Co: Va 23511–
Landholding Agency: Navy
Property Number: 77199920149
Status: Excess
Comment: 4922 sq. ft., presence of asbestos/lead paint, most recent use—lab, off-site use only

Structure NH–203
Atlantic Fleet Hdqts.
Support Activity
Norfolk Co: VA 23511–
Landholding Agency: Navy
Property Number: 77199920150
Status: Excess
Comment: 1974 sq. ft., presence of asbestos/lead paint, most recent use—maint. shop, off-site use only

Structure NH–213
Atlantic Fleet Hdqts.
Support Activity
Norfolk Co: VA 23511–
Landholding Agency: Navy
Property Number: 77199920151
Status: Excess
Comment: 7840 sq. ft., presence of asbestos/lead paint, most recent use—storage, off-site use only

Land (by State)

New York

Galeville Army Training Site
Shawangunk Co: Ulster NY 12589–
Landholding Agency: GSA
Property Number: 21199510128
Status: Excess
Comment: 55 acres of 622 acres are available, improved w/inactive runways, 234 acres is wetlands and habitat for threatened species
GSA Number: 2–D–NY–807

Unsuitable Properties

Buildings (by State)

California

Soil & Materials Testing Lab
Sausalito Co: CA 00000–
Landholding Agency: COE
Property Number: 31199920002
Status: Excess
Reason: Contamination

Hawaii

Facility 5
Naval Computer & Telecommunications
Area Master Station
Luallualei Co: HI 96792–
Landholding Agency: Navy
Property Number: 77199920138
Status: Excess
Resaons: Secured Area; Extensive deterioration

Facility 31
Naval Computer & Telecommunication
Area Master Station
Lualualei Co: HI 96792–
Landholding Agency: Navy
Property Number: 77199920139
Status: Excess
Reasons: Secured Area; Extensive deterioration

Facility 429
Naval Computer & Telecommunication
Area Master Station
Lualualei Co: HI 96792–
Landholding Agency: Navy
Property Number: 77199920140
Status: Excess
Reasons: Secured Area; Extensive deterioration

Facility 430
Naval Computer & Telecommunication
Area Master Station
Lualualei Co: HI 96792–
Landholding Agency: Navy
Property Number: 77199920141
Status: Excess
Reasons: Secured Area; Extensive deterioration

Bldg. T48
Pearl Harbor Naval Shipyard
Pearl Harbor Co: Honolulu HI 96860–
Landholding Agency: Navy
Property Number: 77199920142
Status: Unutilized
Reasons: Secured area; Extensive deterioration

Bldg. T8
Pearl Harbor Naval Shipyard
Pearl Harbor Co: Honolulu HI 96860–
Landholding Agency: Navy
Property Number: 77199920143
Status: Excess
Reasons: Within 2000 ft. of flammable or explosive material; Secured area; Extensive deterioration

Structure S1133
Pearl Harbor Naval Shipyard
Pearl Harbor Co: Honolulu HI 96860–
Landholding Agency: Navy
Property Number: 77199920144
Status: Excess
Reason: Secured area

Structure 1448
Pearl Harbor Naval Shipyard
Pearl Harbor Co: Honolulu HI 96860–
Landholding Agency: Navy
Property Number: 77199920145
Status: Excess
Reasons: Secured area; Extensive deterioration

North Carolina

Bldg. 2159
Marine Corps Air Station, Cherry Point
Havelock Co: Craven NC 28532–
Landholding Agency: Navy
Property Number: 77199920146
Status: Excess
Reasons: Secured Area; Extensive deterioration

Structure 3758
Marine Corps Air Station, Cherry Point
Havelock Co: Craven NC 28532–
Landholding Agency: Navy
Property Number: 77199920147
Status: Excess
Reasons: Secured Area; Extensive deterioration

Pennsylvania

Bldg. 714
Naval Surface Warfare Center,
Philadelphia Co: PA 19112–
Landholding Agency: Navy
Property Number: 77199920148
Status: Unutilized
Reason: Extensive deterioration

Washington

Bldg. 73
Naval Undersea Warfare Center
Keyport Co: Kitsap WA 98345–
Landholding Agency: Navy
Property Number 77199920152
Status: Underutilized
Reasons: Within 2000 ft. of flammable or explosive material; Secured Area

Land (by State)

California

Parcel 3
Construction Battalion Center
Port Hueneme Co: Ventura CA 93043–
Landholding Agency: Navy
Property Number: 77199920137
Status: Underulized
Reasons: Within 2000 ft. of flammable or explosive material; Secured Area

[FR Doc. 99–15837 Filed 6–24–99; 8:45 am]

BILLING CODE 4210–29–M

DEPARTMENT OF THE INTERIOR

Bureau of Indian Affairs

Draft Environmental Impact Statement for the Proposed Cabazon Section 6 General Plan, Cabazon Indian Reservation, Indio, California

AGENCY: Bureau of Indian Affairs, Interior.

ACTION: Notice.

SUMMARY: This notice advises the public that the Draft Environmental Impact Statement (DEIS) for a proposed general plan and master lease of approximately 590 acres held in trust by the federal government for the Cabazon Band of Mission Indians in Riverside County, California, is now available for public review and comment. The DEIS, prepared by the Bureau of Indian Affairs (BIA) in cooperation with the Cabazon Band of Mission Indians, describes a proposed resource recovery park and industrial area for the recycling, reuse and transformation of various types of waste. A description of the proposed project location and of the environmental issues addressed in the DEIS follow as supplementary information. This notice also announces a public hearing, to be co-hosted by the BIA and the Cabazon Band, to receive public comments on the DEIS.

DATES: Comments must be received on or before August 27, 1999. Please put the following caption on the first page of all correspondence: ''DEIS Comments, Cabazon Section 6 General Plan, Cabazon Indian Reservation, Indio, California.'' The public hearing will be on July 21, 1999, from 6 to 8 p.m.

ADDRESSES: Send comments to Ronald M. Jaeger, Area Director, Sacramento Area Office, Bureau of Indian Affairs, 2800 Cottage Way, Sacramento, California 95825–1846. The public hearing will be held at the Cabazon Band Council Chambers, 84245 Indio Springs Drive, Indio, California.

The DEIS is available for review at the Cabazon Band of Mission Indians' Administrative Offices, 84245 Indio Springs Drive, Indio, California 92203. To obtain a copy of the DEIS, please write or call William Allan, Environmental Protection Specialist, Sacramento Area Office, Bureau of Indian Affairs, 2800 Cottage Way, Sacramento, California 95825–1846, telephone (916) 979–2575, extension 254.

FOR FURTHER INFORMATION CONTACT: William Allan (916) 979–2575, extension 254.

SUPPLEMENTARY INFORMATION: The proposed action is to approve (1) a general plan of development, called the Cabazon Resource Recovery Park (CRRP), for the majority of Section 6, and (2) a master lease of the land from the Cabazon Band of Mission Indians to a tribally-owned corporation. Section 6 is located in the Coachella Valley, California, approximately one mile northwest of the unincorporated town of Mecca. It is characterized by smooth topography, ranging in elevation from 180 feet below to 146 feet below mean sea level. Section 6 is adjacent on its west and south sides to the Coachella Valley Enterprise Zone, a 27,000 acre area established by the California State Legislature to create jobs and economic development.

The industrial and commercial facilities planned for the CRRP will be environmentally responsible industries which individually and collectively implement practical solutions to a variety of environmental and waste management problems. The various types of facilities will be integrated such that the output of some would provide input to others, thus enhancing the overall efficiency and effectiveness both of waste management and manufacturing projects.

Existing facilities and those in development or proposed are as follows: (1) biomass power plant, (2) bio-solids recycling plant, (3) contaminated soil recycling plant, (4) tire recycling and re-manufacturing plant, (5) nickel wire recycling and manufacturing plant, (6) waste food and green waste recycling facility, (7) aquaculture facility, (8) materials recovery facility, (9) metals reclamation facility, (10) gasification facility, (11) catalytic converter, platinum recovery facility, (12) construction and demolition materials recovery facility, (13) fuels and chemicals storage and distribution facility, (14) used oil recovery refinery, (15) plant making speciality glass products from reclaimed glass, (16) hazardous waste and hazardous commodity processing and transfer facility, and (17) associated supporting infrastructure (rail yards, sewage treatment, etc.). The CRRP project will meet all applicable environmental standards and regulations.

The DEIS addresses the issues identified during scoping. An earlier version of the DEIS was issued on June 12, 1998 (63 FR 32238), but withdrawn on January 15, 1999 (64 FR 2657). Comments received on the earlier version were treated as comments on scoping. Alternatives to the proposed project that are considered in the DEIS include the no action alternative and a reduced project, which is the preferred alternative. The environmental issues addressed in the DEIS include land and water resources, air quality, living resources, cultural and socioeconomic resources, land use, traffic, noise, public safety and health, and visual resources.

This notice is published in accordance with section 1503.1 of the Council on Environmental Quality Regulations (40 CFR Parts 1500 through 1508), implementing the procedural requirements of the National Environmental Policy Act of 1969, as amended (42 U.S.C. 4321 *et seq.*), and the Department of the Interior Manual (516 DM 1–6), and is in the exercise of authority delegated to the Assistant Secretary—Indian Affairs by 209 DM 8.

Dated: June 21, 1999.

Kevin Gover,

Assistant Secretary—Indian Affairs.

[FR Doc. 99–16257 Filed 6–24–99; 8:45 am]

BILLING CODE 4310–02–P

DEPARTMENT OF THE INTERIOR

Bureau of Indian Affairs

Final Environmental Impact Statement for the Proposed High Mesa Environmental Facility on the Pueblo of Nambe, Santa Fe County, New Mexico

AGENCY: Bureau of Indian Affairs, Interior.

ACTION: Notice.

SUMMARY: This notice advises the public that the Final Environmental Impact Statement (FEIS) for the proposed approval of a lease of approximately 100 acres held in trust by the federal government for the Pueblo of Nambe in Santa Fe County, New Mexico, is now available for public review and comment. The FEIS, prepared by the Bureau of Indian Affairs (BIA), describes the High Mesa Environmental Facility, proposed for construction and operation on the leased land. The facility would receive construction and demolition (C&W) waste and municipal solid waste (MSW) from the Pueblo of Nambe and the surrounding area. A description of the proposed project location and of the environmental issues addressed in the FEIS follow as supplementary information.

DATES: Comments must be received on or before July 26, 1999.

ADDRESSES: Send comments to Allen Sedik, Environmental Scientist, Albuquerque Area Office, Bureau of Indian Affairs, P.O. Box 26567, Albuquerque, New Mexico 87125–6567.

Copies of the FEIS may be obtained from Allen Sedik at the above address, or by calling (505) 346–7109. The FEIS is also available for review at this address, and at four other locations, as follows: Pueblo of Nambe, Department of Environment and Natural Resources, Route 1, Box 117–BB, Pueblo of Nambe, New Mexico 87501; Allen Clark, Reference Services, Albuquerque Public Library, 501 Copper Avenue NW, Albuquerque, New Mexico 87102; Bambi Adams, Reference Services, Santa Fe Public Library, 145 Washington Avenue, Santa Fe, New Mexico 87501; and Espanola Public Library, 314–A Onate Street, Espanola, New Mexico 87532.

FOR FURTHER INFORMATION CONTACT: Allen Sedik, (505) 346–7109.

SUPPLEMENTARY INFORMATION: The proposed action would lease 100 acres of the Pueblo of Nambe to High Mesa Environmental LLC for the purposes of constructing and operating a combined MSW and C&D waste facility for a variety of nonhazardous wastes. Approximately 200 to 400 tons per day of waste material would be delivered to the facility by truck. The purpose of the action is to help meet the northern New Mexico Pueblos' solid waste management needs, and to provide a foundation for economic development for the Pueblo of Nambe.

The proposed project includes an initial C&D-only waste cell, with an operations area and a site well. The facility will ultimately include five additional lined cells for combined MSW and C&D waste, two collection ponds, monitoring wells, a leachate evaporation pond, and offsite roadway improvements. The project will meet all applicable environmental standards and regulations.

The project area is in the central portion of the Espanola Basin, part of the Alamosa-Santa Fe segment of the Rio Grande rift, 17 miles northwest of Santa Fe, New Mexico. It is an isolated site located three miles from the Pueblo proper, with no infrastructure such as water, power, or roads. The terrain in this area is steep and mostly clay, with little to no vegetation. The area is considered badlands.

Alternatives to the proposed project that are considered in the FEIS include: (1) Limited development; (2) use of an old landfill site; (3) alternate sites on the Pueblo of Nambe; (4) alternate sites off of the Pueblo; (5) use of the site for recreation; (6) use of the site for agriculture; and (7) no action. The environmental issues addressed in the FEIS include geology, topography, soils, water resources, air quality, living resources, cultural resources, traffic, land use, visual resources, socioeconomic, public health and safety, and noise.

Public participation in the preparation of this FEIS consisted of a public scoping meeting on September 25, 1997, plus two public meetings, one on March 17, and the other on April 21, 1998, to inform the public about the Draft Environmental Impact Statement (DEIS) and provide participants an opportunity for comment. The public was also afforded a 60-day period for comment on the DEIS. The availability of the DEIS for comment for this period was published in the **Federal Register** (63 FR 16569, April 3, 1998), the Rio Grande Sun, and the Santa Fe New Mexican.

This notice is published in accordance with section 1503.1 of the Council on Environmental Quality Regulations (40 CFR Parts 1500 through 1508), implementing the procedural requirements of the National Environmental Policy Act of 1969, as amended (42 U.S.C. 4321 *et seq.*), and the Department of the Interior Manual (516 DM 1–6), and is in the exercise of authority delegated to the Assistant Secretary—Indian Affairs by 209 DM 8.

Dated: June 21, 1999.

Michael J. Anderson,

Deputy Assistant Secretary—Indian Affairs.

[FR Doc. 99–16258 Filed 6–24–99; 8:45 am]

BILLING CODE 4310–02–P

DEPARTMENT OF THE INTERIOR

Bureau of Land Management

Notice of availability of Final Environmental Impact Statement for the Ray Land Exchange/Plan Amendment

AGENCY: Bureau of Land Management, Interior.

ACTION: Notice of Availability, Final Environmental Impact Statement (FEIS)/ Plan Amendment.

SUMMARY: The Bureau of Land Management (BLM), Arizona State Office and Tucson Field Office, in response to a land exchange proposal from ASARCO Incorporated (Asarco) has prepared a FEIS in compliance with the Federal Land Policy and Management Act of 1976, as amended (FLPMA), the Federal Land Exchange Facilitation Act, and the National Environmental Policy Act of 1969. The land exchange FEIS is combined with a proposed plan amendment to change the Phoenix and Safford District Resource Management Plans (RMPs) under BLM planning regulations (43 CFR 1600) for the purpose of exchanging public lands pursuant to Section 206 of FLPMA. Asarco has proposed to exchange 10,976 acres of federal lands or minerals in Pinal and Gila counties for 7,300 acres of private lands in Mohave and Pinal counties. The FEIS analyzes four alternatives. A plan amendment is required for all but 637 acres since prior land tenure decisions were to retain these parcels or mineral estate in federal ownership.

DATES: This Notice initiates a 30-day comment period for the FEIS and a 30-day protest period for the proposed plan amendment.

FOR FURTHER INFORMATION CONTACT: Shela McFarlin, Project Manager, BLM, Arizona State Office, 222 N. Central, Phoenix, AZ 85004, or by telephone (602) 417–9568.

SUPPLEMENTARY INFORMATION:

Description of the Proposed Action. Public lands (in Pinal and Gila counties) analyzed for exchange include federal mineral estate (2,780 acres) and federal surface and mineral estate (8,196 acres). Most parcels surround the Ray Mine and Hayden Complex operated by Asarco; or, these consist of future prospects for mineral development or support, including 637 acres near Casa Grande. The 7,300 acres of non-federal lands offered to the BLM include high resource values such as: inholdings or adjacent lands to the Mt. Tipton Wilderness and Sacramento Valley Wilderness; riparian zones along the Gila River and Big Sandy River; occupied habitat for the southwestern willow flycatcher, American peregrine falcon and bald eagle; proposed critical habitat for cactus ferruginous pygmy owl; desert tortoise category I and II habitat; and, checkerboard inholdings within the McCracken Area of Critical Environmental Concern. These parcels are located within Mohave (mainly) and Gila counties.

Alternatives Analyzed

Four alternatives are analyzed in the FEIS. The Proposed Action (Agency Preferred Alternative) would exchange 10,976 acres of public lands or mineral estate for 7,300 acres of private, would provide for continuing public access through the White Canyon-Copper Butte area, and result in a donation of 480 acres along Walnut Creek (if Asarco is successful in purchasing this parcel from the state of Arizona). Under the Buckeye Alternative, the exchange would consist only of 10,176 acres of public lands or minerals for 6,659 acres of offered lands and continued public access. The Copper Butte Alternative

reduces the action to exchanging 9,161 public acres for 5,601 acres of offered lands. Under the No Action Alternative, an exchange would not occur; federal lands and minerals would remain under BLM management.

Comments on the FEIS

Comments will be considered in preparing the record of decision on the land exchange. All comments on the FEIS must be received within 30 days of this Notice. Send FEIS comments to: Shela McFarlin, BLM, Arizona State Office, 222 N. Central Avenue, Phoenix, AZ 85004.

Please note that comments, including names and street addresses of respondents, are available for public review and/or release under the Freedom of Information Act (FOIA). Individual respondents may request confidentiality. If you wish to withhold your name and street address from public review or from disclosure under FOIA, you must state this prominently at the beginning of your written comment. Such requests will be honored to the extent allowed by law. All submissions from organizations or businesses, and from individuals identifying themselves as representatives or officials of organizations or businesses, will be made available for public inspection in their entirety.

Protest of the Proposed Plan Amendment

This FEIS combines the analysis of the exchange proposal with a proposed plan amendment. The amendment would change the existing land tenure decision in the Phoenix and Safford District Resource Management Plans to retain much of the selected lands, to a decision to dispose of these lands. The plan amendment process offers an opportunity for administrative review by filing a protest with the BLM Director. This applies only to the proposed plan amendment, not the exchange itself. The protest must be received at the address below by close of business within 30 days of this Notice. Protest letters must be sent to: Director, BLM; Attention: Ms. Brenda Williams, Protests Coordinator WO–210/LS–1075; Department of the Interior, Washington, DC 20240. The overnight mail address for protests is: Director, BLM; Attention: Ms. Brenda Williams, Protests Coordinator (WO–210), 1620 L. Street NW, Room 1075, Washington, DC 20036. At a minimum, protest letters must include: (1) The name, mailing address, telephone number and interest of the person filing the protest. (2) A statement of which parcel or parcels (by township, range and section) or issues are being protested. (3) A statement of the part or parts of the plan amendment being protested. To the extent possible, this should be done by reference to specific pages, paragraphs, sections, tables and maps included within the proposed plan amendment. (4) A copy of all documents addressing the issues or parcels that you submitted during the planning process or a reference to the date the issue or issues were discussed by you for the record. (5) A statement of reasons explaining why the BLM State Director's proposed decision is believed to be incorrect. All relevant facts need to be included in the statement of reasons. These facts, reasons, and documentation are very important to understand the protest rather than merely expressing disagreement with the proposed decision.

Copies of the FEIS may be requested from: Shela McFarlin, (address above), (602) 417–9568, or from these offices: BLM Phoenix Field Office, 2015 West Deer Valley Rd., Phoenix, AZ. 85027; BLM Tucson Field Office, 12661 East Broadway, Tucson, AZ. 85748; and, BLM Kingman Field Office, 2475 Beverly Avenue, Kingman, AZ. 86401. Review copies are available at public libraries in Mesa, Kingman and Kearny; and the Arizona State University, Hayden Library, Tempe, AZ.

Dated: June 16, 1999.

Gary Bauer,

Acting State Director.

[FR Doc. 99–15920 Filed 6–24–99; 8:45 am]

BILLING CODE 4310–32–P

DEPARTMENT OF THE INTERIOR

Bureau of Land Management

[ID–015–1610–00]

Notice of Availability of Proposed Owyhee Resource Management Plan and Final Environmental Impact Statement (RMP/EIS); and Proposed Area of Critical Environmental Concern (ACEC) Designations

SUMMARY: Pursuant to section 202 of the Federal Land Policy and Management and section 102(2)(c) of the National Environmental Policy Act, the Bureau of Land Management (BLM) has prepared a proposed Resource Management Plan (RMP) and associated final Environmental Impact Statement (EIS) for the Owyhee Resource Area. The RMP/EIS addresses alternatives for management on 1.3 million acres of BLM administered public lands in southwest Idaho. Consideration of 20 areas for Area of Critical Environmental Concern (ACEC) designation is also addressed in the document. This notice, therefore, is also issued pursuant to 43 CFR Part 1610.7–2(b) of the BLM Planning Regulations. The RMP/EIS also addresses suitability of wild, scenic and recreational designations on 223 miles of stream segments determined to be eligible for such designations under the Wild and Scenic Rivers Act. The public has the opportunity to protest the Owyhee Proposed Resource Management Plan, which is Alternative E in the final EIS. The BLM Planning Regulations, 43 CFR 1610.5–2, state that any person who participated in the planning process and has an interest which may be adversely affected may protest. A protest may raise only those issues which were submitted for the record during the planning process. The protest shall be filed within 30 days of the date the Environmental Protection Agency publishes the notice of receipt of the final EIS in the **Federal Register**.

DATES: The 30-day protest period provided for in the BLM Planning Regulations will begin on July 2, 1999 and end on August 2, 1999. Written protests may be submitted at any time during the protest period and must be filed (postmarked) by August 2, 1999 at the address below.

ADDRESSES: Written protests must be sent to: Director, Bureau of Land Management, Attention: Ms Brenda Williams, Protests Coordinator, WO–210/LS–1075, Department of the Interior, Washington, D.C. 20240.

FOR FURTHER INFORMATION CONTACT: Daryl Albiston, Area Manager; or Fred Minckler, Team Leader at the address above. Telephone (208) 384–3300. Copies of the RMP/EIS are available for inspection at the BLM, Boise Field Office, 3948 Development Avenue, Boise, ID 83705.

SUPPLEMENTARY INFORMATION: The Owyhee Resource Area includes 1,320,032 acres of BLM administered public lands in western Owyhee County, Idaho and encompasses 1,779,492 acres including State and private lands. The Owyhee RMP/EIS describes and analyzes five alternatives for managing these public lands. The land use planning effort addresses a broad spectrum of land uses and allocations including wild horse management, land tenure adjustments, off-highway motorized vehicle (OHMV) designations, wild, scenic and recreational river designations, and areas of critical environmental concern (ACECs). Twenty areas ranging in size from 114 acres to 141,796 acres totaling

293,133 acres are being considered for ACEC designation. Resource use limitations vary among alternatives for each area and pertain to OHMV designations, rights-of-way, livestock management, juniper control, fire management and minerals activities.

Dated: June 14, 1999.

Howard Hedrick,

Associate District Manager.

[FR Doc. 99–16154 Filed 6–24–99; 8:45 am]

BILLING CODE 4310–GG–P

DEPARTMENT OF THE INTERIOR

Bureau of Land Management

[NM–010–1220–00/G–010–G9–0255]

Notice of Availability of a Draft Rio Puerco Resource Management Plan Amendment/Environmental Impact Statement (RMP Amendment/EIS) for El Malpais National Conservation Area (NCA) and Chain of Craters Wilderness Study Area (WSA)

AGENCY: Bureau of Land Management, Interior.

ACTION: Notice.

SUMMARY: The Bureau of Land Management (BLM), Albuquerque Field Office has completed a Draft Resource Management Plan (RMP) Amendment/Environmental Impact Statement (EIS). If approved, the RMP Amendment would alter some decisions in the Rio Puerco RMP for the NCA and add decisions for lands recently acquired. The document establishes planning to the activity level for many of the issues addressed.

The EIS provides environmental analysis of the impacts of four alternative ways of managing the NCA and adjoining lands. Alternative A is the Existing Management (No Action) Alternative. It would be a continuation of current management and establishes the baseline for impact analysis. Management under Alternative B, the Resource Use Alternative, would support direct human action. Under Alternative C (Natural Processes), management would minimize human activity. Alternative D (Balanced Management) is the BLM's Preferred Alternative, which proposes to balance use and conservation. The document also addresses a legislative requirement to recommend for or against the designation of the Chain of Craters Wilderness Study Area as wilderness.

DATES: Written comments must be postmarked no later than September 24, 1999.

Formal verbal comments will be received at the following public hearings, which will begin at 7:00 p.m. and continue until those signed up to speak have had an opportunity to do so:

(1) Monday, July 26.

(2) Tuesday, July 27.

(3) Wednesday, July 28.

ADDRESSES: Written comments should be sent to: El Malpais Plan Team Leader, BLM Albuquerque Field Office, 435 Montaño Road NE, Albuquerque, NM 87107–4935. The public hearings will be held at the following locations:

(1) Grants High School, 500 Mountain Road, Grants, NM.

(2) Quemado High School, Highway 60, Quemado, NM.

(3) Del Norte High School, 5323 Montgomery Blvd. NE, Albuquerque, NM.

Copies are available for review at public libraries in Albuquerque and Grants, New Mexico and at the following address on the Internet: www.nm.blm.gov. Additional copies are available at the following BLM New Mexico offices: New Mexico State Office, 1474 Rodeo Road, Santa Fe; Albuquerque Field Office, 435 Montaño Road NE, Albuquerque; Grants Field Station, 2001 Santa Fe Ave., Grants; and Socorro Field Office, 198 Neel Ave. NW, Socorro.

FOR FURTHER INFORMATION CONTACT: Kent Hamilton, El Malpais Plan Team Leader, BLM Albuquerque Field Office, 435 Montaño Road NE, Albuquerque, NM 87107–4935; phone (505) 761–8746.

SUPPLEMENTARY INFORMATION: The Draft RMP Amendment includes revised planning for the following four issues: (1) Recreation (including Visual Resource Management), (2) Access and Transportation, (3) Wilderness Suitability, and (4) Boundary and Land Ownership Adjustments. If approved, these amendments would only affect the NCA and adjoining areas as specified. Decisions for other issues and geographic areas addressed in the Rio Puerco RMP would not be changed.

The following issues have been addressed in the environmental analysis: (1) Recreation, (2) Facility Development, (3) Access and Transportation, (4) Wilderness Management, (5) Wilderness Suitability, (6) American Indian Uses and Traditional Cultural Practices, (7) Cultural Resources, (8) Wildlife Habitat, (9) Vegetation, and (10) Boundary and Land Ownership Adjustments.

Comments, including names and addresses of respondents, will be available for public review at the above address during regular business hours (7:45 a.m. to 4:30 p.m.), Monday through Friday (except holidays), and may be published as part of the Proposed Resource Management Plan Amendment/Final Environmental Impact Statement. Individual respondents may request confidentiality. If you wish to withhold your name or street address from public review or from disclosure under the Freedom of Information Act, you must state this prominently at the beginning of your written comment. Such requests will be honored to the extent allowed by law. All submissions from organizations or businesses, and from individuals identifying themselves as representatives or officials of organizations or businesses, will be made available for public inspection in their entirety.

Mike O'Neill,

Acting Albuquerque Field Office Manager.

[FR Doc. 99–14966 Filed 6–24–99; 8:45 am]

BILLING CODE 4310–AG–P

DEPARTMENT OF THE INTERIOR

Minerals Management Service

Agency Information Collection Activities: Submitted for Office of Management and Budget Review; Comment Request

AGENCY: Minerals Management Service (MMS), Interior.

ACTION: Notice of information collection request.

SUMMARY: To comply with the Paperwork Reduction Act (44 U.S.C. 3501 *et seq.*), we are notifying you that an information collection request (ICR) has been forwarded to the Office of Management and Budget (OMB) for review and approval. We are also soliciting your comments on this ICR which describes the information collection, its expected costs and burden, and how the data will be collected.

DATES: Written comments should be received on or before July 26, 1999.

ADDRESSES: You may submit comments directly to the Office of Information and Regulatory Affairs, OMB, Attention: Desk Officer for the Interior Department (OMB Control Number 1010–0120), 725 17th Street, NW, Washington, DC 20503; telephone (202) 395–7340. You should also send copies of these comments to us. The U.S. Postal Service address is Minerals Management Service, Royalty Management Program, Rules and Publications Staff, P.O. Box 25165, MS 3021, Denver, Colorado, 80225–0165; the courier address is Building 85, Room A–613, Denver Federal Center, Denver, Colorado 80225; and the e:Mail address is RMP.comments@mms.gov.

FOR FURTHER INFORMATION CONTACT: To obtain copies of the proposed information collection and related explanatory material, contact Dennis C. Jones, Rules and Publications Staff, telephone (303) 231–3046, FAX (303) 231–3385, e-Mail Dennis.C.Jones@mms.gov.

SUPPLEMENTARY INFORMATION:

Title: Solid Minerals Reengineering Operational Model.

OMB Control Number: 1010–0120.

Abstract: The Secretary of the Interior is responsible for collecting royalties from leases producing minerals from leased Federal and Indian lands. The Secretary is required by various laws to manage the production of mineral resources on Indian lands and Federal onshore and offshore leases, to collect the royalties due, and to distribute the funds in accordance with those laws; we perform these royalty management functions for the Secretary.

When a company or an individual enters into a contract or lease to develop, mine, and dispose of Federal or Indian minerals, that company or individual (the respondent) agrees to pay the appropriate royalty due based upon gross proceeds received from the sale of production from the leased lands. Royalty rates are specified in the lease agreement. Specific lease language varies; however, respondents agree by the lease terms to furnish statements providing the details of all operations conducted on a lease and the quantity and quality of all production from the lease at such times and in such form as the Secretary may prescribe. Rules require respondents to provide accurate, complete, and timely reports for all minerals produced, in the manner and form prescribed by MMS in 30 CFR Part 210, Subpart E, and Part 216, Subpart A.

We currently require respondents to submit eight separate forms to collect the above information. We also require respondents to resubmit each of these forms to correct any errors which may have occurred on previous submissions of required information. The Solid Minerals Operational Model will focus on collecting production, royalty, and valuation data, while streamlining reporting requirements. The participating companies will continue to submit the eight currently required forms and will also submit the required information using new reporting guidelines for this operational model.

We will collect the production, royalty, and valuation data using information technology. We will use the information collected to support:

- Distribution and Disbursement. We must match the royalty payment submitted on the Report of Sales and Royalty Remittances (Form MMS–2014) to the Production and Royalty Report (Form MMS–4430), maintain lease accounts of payments, and ensure the distribution of data and disbursement of monies to our revenue recipients.
- Compliance and Asset Management Processes. We must determine areas not in compliance for a lease or mine sooner than the current processes allow. The Production and Royalty Report form is designed to give us the basic volume and valuation information necessary to begin these compliance activities so that we may compare it to the Remote Storage and Washing Plant and Market Profile data formats.
- Monitoring Allowances and Off-site Activity. We must monitor allowance deductions and off-site inventory and sales. Companies maintain electronic data files of this information as a normal course of business. We propose to download the data from these company-maintained files to our compliance data systems. Our intent is to minimize the information collection burden on industry respondents as well as ourselves.
- BLM Production Verification, Diligent Development, and Recoverable Reserves Calculations. We must make facility data available on-line to all BLM, BIA, Tribal, and State Audit offices. During the operational model, we will refine the Remote Storage and Washing Plant data to ensure BLM can perform these processes, including monitoring plant efficiencies, maximum recovery, and secondary product inventories.
- Compliance and Asset Management Processes. We will require the submission of supplemental information (Market Profile) for the compliance aspect of our reengineering efforts. The Market Profile data will be an integral part of the Compliance and Asset Management process being developed in the operational model. We will use this information to verify royalty value and augment monitoring and detection of compliance problems on those mines. This information will only be collected from those reporters whose royalties are based on gross proceeds or who sell products beyond the mine site.

Respondents/Affected Entities: Solid Minerals Mining Companies.

Frequency of Response: Monthly and quarterly.

Estimated Number of Respondents: 8.

Estimated Total Annual Reporting and Recordkeeping Burden: 463 hours.

Comments: Section 3506(c)(2)(A) of the Paperwork Reduction Act requires each agency ''* * * to provide notice * * * and otherwise consult with members of the public and affected agencies concerning each proposed collection of information. * * *'' Agencies must specifically solicit comments to: (a) evaluate whether the proposed collection of information is necessary for the agency to perform its duties, including whether the information is useful; (b) evaluate the accuracy of the agency's estimate of the burden of the proposed collection of information; (c) enhance the quality, usefulness, and clarity of the information to be collected; and (d) minimize the burden on the respondents, including the use of automated collection techniques or other forms of information technology.

Send your comments directly to the offices listed under the **ADDRESSES** section of this notice. OMB has up to 60 days to approve or disapprove the information collection but may respond after 30 days. Therefore, to ensure maximum consideration, OMB should receive public comments by July 26, 1999.

MMS Information Collection Clearance Officer: Jo Ann Lauterbach, (202) 208–7744.

Dated: June 18, 1999.

R. Dale Fazio,

Acting Associate Director for Royalty Management.

[FR Doc. 99–16192 Filed 6–24–99; 8:45 am]

BILLING CODE 4310–MR–P

INTERNATIONAL TRADE COMMISSION

Sunshine Act Meeting

AGENCY HOLDING THE MEETING: United States International Trade Commission.

TIME AND DATE: July 2, 1999 at 11:00 a.m.

PLACE: Room 101, 500 E Street S.W., Washington, DC 20436, Telephone: (202) 205–2000.

STATUS: Open to the public.

MATTERS TO BE CONSIDERED:

1. Agenda for future meeting: None.
2. Minutes.
3. Ratification List.
4. Inv. No. TA–201–69 (Certain Steel Wire Rod) (Remedy Phase)—briefing and vote. (The Commission will transmit its recommendations to the President on July 12, 1999.)
5. Outstanding action jackets:

(1.) Document No. GC–99–057: Regarding Inv. No. 337–TA–412 (Certain Video Graphics Display Controllers and Products Containing Same).

In accordance with Commission policy, subject matter listed above, not disposed of at the scheduled meeting,

may be carried over to the agenda of the following meeting.

Issued: June 22, 1999.

By order of the Commission:

Donna R. Koehnke,

Secretary.

[FR Doc. 99–16368 Filed 6–23–99; 2:43 pm]

BILLING CODE 7020–02–M

DEPARTMENT OF JUSTICE

Federal Bureau of Investigation

Criminal Justice Information Services (CJIS) Division; Agency Information Collection Activities: Proposed Collection: Comment Request

ACTION: Notice of information collection under review; Reinstatement, with change, of a previously approved collection for which approval has expired; Age, sex, and race of persons arrested (18 years of age and over) and age, sex, and race of persons arrested (under 18 Years of age).

The Department of Justice, Federal Bureau of Investigation has submitted the following information collection request for review and clearance in accordance with the Paperwork Reduction Act of 1995. Office of Management and Budget approval is being sought for the information collection listed below. This proposed information collection was previously published in the **Federal Register** on February 2, 1999, allowing for a 60-day public comment period. No comments were received by the FBI or the Justice Department.

The purpose of this notice is to allow an additional 30 days for public comment until July 26, 1999. This process is conducted in accordance with 5 CFR 1320.10.

Request written comments and suggestions from the public and affected agencies concerning the proposed collection of information. Comments should address one or more of the following four points:

(1) Evaluate whether the proposed collection of information is necessary for the proper performance of the functions of the agency, including whether the information will have practical utility;

(2) Evaluate the accuracy of the agencies estimate of the burden of the proposed collection of information, including the validity of the methodology and assumptions used;

(3) Enhance the quality, utility, and clarity of the information to be collected; and

(4) Minimize the burden of the collection of information on those who are to respond, including through the use of appropriate automated, electronic, mechanical, or other technological collection techniques of other forms of information technology, e.g., permitting electronic submission of responses.

Comments and/or suggestions regarding the item(s) contained in this notice, especially regarding the estimated public burden and associated response time, should be directed to the Office of Management and Budget, Office of Information and Regulatory Affairs, Attention Department of Justice Desk Officer, Washington, DC, 20503.

Overview of this information collection:

(1) Type of information collection: Reinstatement, with change of a previously approved collection for which approval has expired.

(2) The title of the form/collection: Age, Sex, and Race of Persons Arrested (18 Years of Age and Over) and Age, Sex, and Race of Persons Arrested (Under 18 Years of Age).

(3) The agency form number, if any, and applicable component of the department sponsoring the collection. Form: 1–708; 1–708a. Federal Bureau of Investigation, Federal Bureau of Justice.

(4) Affected public who will be asked or required to respond, as well as brief abstract. Primary: Local and State Law Enforcement Agencies. This collection is needed to collect information on the age, sex, and race of all persons arrested throughout the United States. Data are tabulated and published in the annual *Crime in the United States.*

(5) The FBI UCR Program is currently reviewing its race and ethnicity data collection in compliance with the Office of Management and Budget's *Revisions for the Standards for the Classification of Federal Data on Race and Ethnicity.*

(6) An estimate of the total number of respondents and the amount of time estimated for an average respondent to reply: 17,145 agencies with 411,480 responses (including zero reports); and with an average of 30 minutes a month devoted to compilation of data for this information collection.

(7) An estimate of the total public burden (in hours) associated with this collection: 205,740 hours annually.

If additional information is required contact: Mr. Robert B. Briggs, Clearance Officer, United States Department of Justice, Information Management and Security Staff, Justice Management Division, Suite 850, Washington Center, 1001 G Street, NW, Washington, D.C. 20530.

Dated: June 22, 1999.

Robert B. Briggs,

Department Clearance Officer, United States Department of Justice.

[FR Doc. 99–16177 Filed 6–24–99; 8:45 am]

BILLING CODE 4410–02–M

DEPARTMENT OF JUSTICE

National Institute of Corrections

Solicitation for a Cooperative Agreement

Summary: The Department of Justice (DOJ), National Institute of Corrections (NIC), announces the availability of funds in FY 1999 for a cooperative agreement to fund the ''Development of a Training Video on Staff Sexual Misconduct.''

The National Institute of Corrections (NIC) invites application for a cooperative agreement to develop a training video and companion facilitator's manual on the prevention of staff sexual misconduct with inmates. To expand the Institute's capacity to assist correctional agencies in working with line staff, the award recipient will develop a video to be used by agency training personnel. The video will emphasize state and federal laws that address sexual misconduct, case histories demonstrating the dynamics of staff sexual misconduct, and preventative remedies for avoiding misconduct. The companion manual will guide trainers in delivering the training through interactive discussion with trainees on key points in the video and applying the training to the state or local setting.

The award recipient will become familiar with the work currently being done at NIC on issues related to staff sexual misconduct and will develop strategies for capturing this information in video and training formats. The recipient will refine training outcomes for the video and training guide in collaboration with NIC.

This will be collaborative venture with the NIC Prisons Division. A total of $80,000 is reserved for the project which will support one cooperative agreement for a 12 month period. The recipient of the award will be selected through a competitive solicitation process. Andie Moss is the designated NIC project manager.

Background

The fine balance in the relationships of staff and inmates is critical to the well being of both staff and offenders. Even so, the opportunities have been limited for effective line staff training that addresses the difficult situations of

an emotional or sexual nature that can occur between staff and inmates. Since the mid nineties NIC has provided leadership in addressing the issues of staff sexual misconduct through training seminars and on-site technical assistance and local departments of corrections. The Institute has developed training materials for state prison systems that address policy and practice, the importance of state law, the investigative process, staff training and responses to the media. Through this work, NIC recognizes the need for training tools/teaching aids that increase the capacity of agency trainers of deliver effective, consistent training to multiple sites with large number of staff.

Purpose

This project is intended to provide agency trainers with:

- A training video with a strong emphasis on staff's understanding of their role in the prevention of staff sexual misconduct.
- A companion trainer's guide to address the major points in the video with opportunities for group discussion.

Project Content

The proposal should demonstrate and understanding of key content areas such as: definitions of staff sexual misconduct, and overview of federal and state laws that impact staff, case examples and remedies for prevention of staff sexual misconduct, and the impact of the professional and emotional damage created in sexual misconduct cases. It should demonstrate an understanding of the imblance of power between staff and inmates. While it has been the experience of the Institute that a video presentation of 12–15 minutes allows for flexibility in the training design and delivery in correctional setting, proposers are encouraged to offer their own recommendations regarding length of video and format.

A. Required Activity

- Initial meeting with NIC staff for an overview of the Institute's training and technical assistance activities that are relvant to the development of the video and training guide.

B. Other Possible Activities

- Interviews with key personnel in state and local jurisdictions with experience in the management of or investigative response to sexual misconduct; i.e., commissioners, investigators, and wardens.
- Interviews with line staff and institutional supervisors.
- Interviews with former inmates and/or staff involved in incidents of staff sexual misconduct.
- Interviews with persons with particular interest in addressing staff sexual conduct; *i.e.*, family members, psychologists, legislators, and legal community.
- Examination of the current federal and state law that addresses staff sexual misconduct.
- Development and presentation of case examples involving staff misconduct that lead to or conclude with inappropriate involvement with inmates.
- Identification of ''red flags'' that can alert a staff member to the danger signs for themselves or for co-workers.

Authority: Public Law 93–415.

Funds Available

The award will be limited to a maximum total of $80,000 (direct and indirect costs) and project activity must be completed within 8 months of the date of the award. Funds may only be used for the activities that are linked to the desired outcomes of the project. This project will be a collaborative venture with the NIC Prisons Division.

All products from this funding effort will be in the public domain and available to interested agencies through the National Institute of Corrections.

Deadline for Receipt of Applications: Applications must be received by 4:00 p.m. on Tuesday, August 3, 1999. They should be addressed to: National Institute of Corrections, 320 First Street, NW, Room 5007, Washington, D.C. 20534, Attention: Director. Hand delivered applications can be brought to 500 First Street, NW, Washington, D.C. 20534. The front desk will call Bobbi Tinsley at (202) 307–3106, extension 0 for pickup.

Addresses and Further Information: Requests for the application kit, which consists of a copy of this announcement and copies of the forms and instructions for filing, should be directed to Judy Evens, Cooperative Agreement Control Office, National Institute of Corrections, 320 First Street, N.W., Room 5007, Washington, D.C. 20534 or by calling (800) 995–6423, extension 159 or (202) 307–3106, extension 159. She can also be contacted by E-mail via *jevens@bop.gov*. All technical and/or programmatic questions concerning this announcement should be directed to Andie Moss at the above address or by calling (800) 995–6423, or (202) 307–3106, extension 140, or by E-mail via *amoss@bob.gov*. Application forms may also be obtained through the NIC website: *http://www.nicic.org*.

Eligible Applicants

An eligible applicant is any private or non-profit organization, institution, individual, or team with expertise in production of training videos and related training materials.

Review Considerations

Applications received under this announcement will be subjected to an NIC three to five member Peer Review Process.

Number of Awards: One (1).

NIC application Number: 99P12 This number should appear as a reference line in the over letter and also in box 11 of Standard Form 424.

The Catalog of Federal Domestic Assistance number is: 16.601.

Morris L. Thigpen,

Director, National Institute of Corrections.

[FR Doc. 99–16175 Filed 6–24–99; 8:45 am]

BILLING CODE 4410–36–M

PAROLE COMMISSION

Sunshine Act Meeting

Public Announcement

Pursuant To The Government In the Sunshine Act (Public Law 94–409) [5 U.S.C. Section 552b].

AGENCY HOLDING MEETING: Department of Justice, United States Parole Commission.

TIME AND DATE: 10:30 a.m., Tuesday, June 29, 1999.

PLACE: U.S. Parole Commission, 5550 Friendship Boulevard, 4th Floor, Chevy Chase, Maryland 20815.

STATUS: Open.

MATTERS TO BE CONSIDERED: The following matters have been placed on the agenda for the open Parole Commission meeting:

1. Approval of minutes of previous Commission meeting.
2. Reports from the Chairman, Commissioners, Legal, Chief of Staff, Case Operations, and Administrative Sections.
3. Proposed Changes to the Interim Rules for District of Columbia Code offenders and Approval of Rules as Final Rules.

AGENCY CONTACT: Tom Kowalski, Case Operations, United States Parole Commission, (301) 492–5962.

Dated: June 22, 1999.

Michael A. Stover,

General Counsel, U.S. Parole Commission.

[FR Doc. 99–16300 Filed 6–23–99; 10:08 am]

BILLING CODE 4410–31–M

PAROLE COMMISSION

Sunshine Act Meeting

Public Announcement

Pursuant To The Government In the Sunshine Act (Public Law 94–409) [5 U.S.C. Section 552b].

AGENCY HOLDING MEETING: Department of Justice, United States Parole Commission.

DATE AND TIME: 9:30 a.m., Tuesday, June 29, 1999.

PLACE: U.S. Parole Commission, 5550 Friendship Boulevard, 4th Floor, Chevy Chase, Maryland 20815.

STATUS: Closed—Meeting.

MATTERS CONSIDERED: The following matter will be considered during the closed portion of the Commission's Business Meeting:

Appeals to the Commission involving approximately two cases decided by the National Commissioners pursuant to a reference under 28 CFR 2.27. These cases were originally heard by an examiner panel wherein inmates of Federal prisons have applied for parole or are contesting revocation of parole or mandatory release.

AGENCY CONTACT: Tom Kowalski, Case Operations, United States Parole Commission, (301) 492–5962.

Dated: June 22, 1999.

Michael A. Stover,

General Counsel, U.S. Parole Commission.

[FR Doc. 99–16301 Filed 6–23–99; 10:08 am]

BILLING CODE 4410–31–M

DEPARTMENT OF JUSTICE

National Institute of Corrections; Agency Information Collection Activities: Proposed Collection; Comments Requested

ACTION: Notice of Information Collection Under Review; Reinstatement, without change, of a previously approved collection for which approval has expired; Data base of Offender Job Training and Placement Service Providers.

The Department of Justice, Federal Bureau of Prisons, National Institute of Corrections (NIC) has submitted the following information collection request for review and clearance in accordance with the Paperwork Reduction Act of 1995. Office of Management and Budget approval is being sought for the information collection listed below. This proposed information collection was previously published in the **Federal Register** on April 7, 1999 (64 FR 17014), allowing for a 60-day public comment period. No comments were received by the NIC or the Justice Department.

The purpose of this notice is to allow an additional 30 days for public comment until July 26, 1999. This process is conducted in accordance with 5 CFR 1320.10.

Written comments and/or suggestions, regarding the items contained in this notice, especially regarding the estimated public burden and associated response time, should be directed to the Office of Management and Budget, Office of Information and Regulatory Affairs, Attention: Department of Justice Desk Office, Room 10235, Washington, DC 20530. Written comments and suggestion from the public and affected agencies concerning the proposed collection of information should address one or more of the following four points:

(1) evaluate whether the proposed collection of information is necessary for the proper performance of the functions of the agency/component, including whether the information will have practical utility;

(2) evaluate the accuracy of the agencies/components estimate of the burden of the proposed collection of information, including the validity of the methodology and assumptions used;

(3) enhance the quality, utility, and clarity of the information to be collected; and

(4) minimize the burden of the collection of information on those who are to respond, including through the use of appropriate automated, electronic, mechanical, or other technological collection techniques or other forms of information technology, *e.g.* permitting electronic submission of responses.

Overview of This Information Collection

(1) *Type of information collection:* Reinstatement, without change, of a previously approved collection for which approval has expired.

(2) *The title of the form/collection:* Data base of Offender Job Training and Placement Service Providers.

(3) *The agency form number, if any, and the applicable component of the department sponsoring the collection:* Department of Justice, Bureau of Prisons, National Institute of Corrections, Office of Correctional Job Training and Placement.

(4) *Affected public who will be asked or required to respond, well as a brief abstract:* Agencies and organizations involved in providing job counseling, training in job readiness skills, job development, and job placement services for offenders and/or ex-offenders to include public corrections, *i.e.* State and local Prison Systems; Jails; Departments of Probation and Parole; and Private For Profit and Private Not For Profit Agencies and Organizations. Other: None Information gathered from the survey will be placed in a data base to be used primarily as a mailing list of service providers. The database is being used by the Office of Correctional Job Training and Placement to build a network of professionals providing these services, and it will Facilitate the sharing of timely information to include notices of available training opportunities, publications, and technical assistance.

(5) *An estimate of the total number of respondents and the amount of time estimated for any average respondent too respond/reply:* It is estimated that approximately 75 surveys per year will be forwarded to programs for return and inclusion into the data base. The time burden of the 75 surveys is 10 minutes per survey.

(6) *An estimate of the total public (in hours) associated with the collection:* The total burden hour to complete the applications is 12 hrs. & 45 minutes annually.

If additional information is required contact: Mr. Robert B. Briggs, Clearance Officer, United States Department of Justice, Information Management and Security Staff, Justice Management Division, Suite 850, Washington Center, 1001 G Street, NW, Washington, D.C. 20530.

Dated: June 22, 1999.

Robert B. Briggs,

Department Clearance Officer, United States Department of Justice.

[FR Doc. 99–16256 Filed 6–24–99; 8:45 am]

BILLING CODE 4410–05–M

DEPARTMENT OF LABOR

Employment and Training Administration

Labor Participation in School-To-Work

AGENCIES: Employment and Training Administration, Department of Labor.

ACTION: Notice inviting proposals to develop, identify and disseminate replicable models of labor participation in the development and implementation of School-to-Work (STW) systems in sectors of the economy that represent high skill, high wage employment opportunities. The Departments are seeking innovative approaches to utilizing the workplace for all learners. These awards will provide support to labor organizations with national memberships to undertake outreach, technical assistance and other activities

to increase the number of work-based learning opportunities for students.

This notice contains all of the necessary information and forms needed to apply for grant funding.

SUMMARY: The Departments of Labor and Education jointly invite proposals for approximately 2–3 new awards in PY 1998 as authorized under section 403 of the School-to-Work Opportunities Act of 1994 (the Act). These awards will provide support to national labor unions to undertake outreach and technical assistance to their memberships. These activities are intended to engage and build the capacity of their affiliates and private sector partners to participate in activities that will result in an increase in the number of work based learning opportunities for students. As a result of the products developed and activities and systems implemented, awardees will be required to provide clear, quantifiable evidence of increased numbers of regional and local unions engaged in STW activities, with supporting documentation that clearly illustrates an increase in the number of students engaged in work-based learning activities.

DATES: Applications for grant awards will be accepted commencing June 25, 1999. The closing date for receipt of applications is August 24, 1999 at 4 P.M. (eastern time) at the address below. Telefacsimile (FAX) applications will not be honored.

ADDRESSES: Applications shall be mailed to: U.S. Department of Labor, Employment and Training Administration, Division of Federal Assistance, Attention: Ms. Denise Roach, Reference: SGA/DFA 99–016, 200 Constitution Avenue, N.W., Room S–4203, Washington, D.C., 20210.

FOR FURTHER INFORMATION CONTACT: Questions should be faxed to Denise Roach, Grants Management Specialist, Division of Federal Assistance, fax: (202) 219–8739 (this is not a toll free number). All inquiries should include the SGA number (DFA 99–016) and a contact name, fax and phone number. This solicitation will also be published on the Internet, on the Employment and Training Administration's Home Page at http://www.doleta.gov. Award notifications will also be published on this Homepage.

Labor Participation in School-To-Work System Building

I. Purpose

Data and preliminary evidence suggest that strategic investments directed at national organizations to develop and disseminate information and provide technical assistance to their membership nationwide is necessary if the entire STW system is to be brought to scale and confidently sustained. Therefore, this solicitation is inviting labor unions in collaboration with business, trade associations, education and labor partners to identify STW practices within their organizations, to expand upon those practices through technical assistance and disseminate that information throughout their network. It is further expected that these practices will be replicable by their affiliated local organizations and information will be disseminated beyond their organization to the greater labor community and STW grantees.

II. Background

The School-to-Work Opportunities Act was signed into law by President Clinton on May 4, 1994. Jointly administered by the Departments of Labor and Education, this Act seeks to better prepare all American youth for careers in high skill, high wage jobs and to strengthen the linkages between school and work. Under the Act, venture capital funds are provided to States and local communities to develop a STW system for transitioning youth from school to college and careers. STW grants are for a limited duration with the Federal investment declining over time. These investments are intended to support the one-time costs of States and local communities to enhance learning experiences for all students. All fifty States including Puerto Rico and the District of Columbia have received implementation awards. The Act also provides a set-aside of funds for national activities to support School-to-Work system building, outreach and research and evaluation efforts. Section 403 of the Act, relating to training and technical assistance, specifically directs the Secretaries to assist STW partnerships ''* * * to increase their capacity to develop and implement effective school-to-work opportunities programs.''

III. Statement of Work

Labor Participation in STW Systems. The School-to-Work Opportunities Act stipulates the importance of participation by key stakeholders at state and local levels, including labor. Labor unions can play a pivotal role in accessing the workplace as a learning environment for students. They have long standing relationships with employers through collective bargaining agreements in communities across the country. Many unions have played major roles in the development of training for their membership through joint labor-management funds. Many are working in collaboration with industry groups in developing voluntary skill standards appropriate to their respective industry.

Prior to this year, the two Departments through the National School-to-Work Office, have made a number of investments to support labor's involvement in aspects of emerging STW systems. A major investment included the National School-to-Work's support of efforts developed by the Human Resource Development Institute (HRDI), recently renamed the Working for America Institute (WAI). WAI developed and disseminated information about STW and labor's role in the development and implementation of STW. It has highlighted labor's STW activities and has helped to recruit labor representatives on State and local partnerships.

In addition, the National School-to-Work Office has worked with members of the building and construction trades, the Bureau of Apprenticeship and Training at the U.S. Department of Labor and the National Association of State and Territorial Apprenticeship Directors to develop and expand upon linkages to registered apprenticeship programs. Many local unions in collaboration with local educational systems are introducing students to the trades in a variety of ways prior to high school graduation.

However, it is evident that in order for STW to be sustained, a broad range of work-based learning opportunities has to be created. National approaches must be developed that will assist and promote STW activities in communities across the country. During FY 1997, the Departments made awards to four entities representing the following industry and trade areas; manufacturing, retail, information technology and utilities. These competitive awards provide support to industry groups and trade associations to undertake outreach, technical assistance and other activities to engage and to build the capacity of employers to participate in STW systems. These investments are underway and appear to represent a promising strategy for increasing employer involvement in STW. For example, the Utility Business Education Coalition, Inc. (UBEC), representing the utility industry, has allocated much of its funding for technical assistance to be provided to 50 communities in 28 states to support local school-to-work systems and workforce development initiatives. UBEC is supporting local and regional efforts to raise academic achievement while integrating academic, technical

and employability skills into curriculum for all students. Whereas, the National Retail Institute, the world's largest retail trade association has begun to replicate its Youth Opportunities in Retail program model in 4 states. The manufacturing project led by the National Association for Manufacturers are in the process of infusing industry skill standards into the manufacturing curriculum at 12 high schools. Finally, the Information Technology Association of America has selected 30 national sites as Centers of Excellence. These sites represent a broad range of education partnerships that will identify and strengthen innovative approaches to increase work-based learning opportunities for students nationally.

The Departments are expecting to make similar industry specific awards in PY 98 and are particularly interested in applications that focus on high growth, high wage industries in communications, transportation, business/finance, and health services.

As a result of these current and future investments, including a more targeted approach to utilizing labor organizations, the Departments expect to significantly increase the number of workplaces offering STW activities and more specifically work-based learning opportunities for all learners. These strategic investments are necessary if the entire STW system is to be brought to scale and sustained.

Required Areas of Effort

The successful applicants will assume the lead responsibility to coordinate and provide technical support to build the capacity of their organization to engage in STW activities. Information regarding the following activities must be described in detail:

1. *A description of at least 15 ongoing STW activities in a minimum of 5 regional or local unions affiliated with the applicant.* These examples must be collaborative and include the education and business communities. They must encompass a broad continuum of STW activities that include mentoring, work-based learning, high academic standards and curriculum collaboration in high wage, high skill occupations. Applicants should describe how they will organize the task of identifying and selecting effective STW activities, how effectiveness will be assessed and how the critical common features of each will be identified to inform the development of a replicable framework. In addition, the applicant should describe how the information would be presented and disseminated to its membership and STW grantees.

2. *Develop a model framework for STW activities in a local union.* Based on identified STW practices from a sample of local unions described above, the Departments are interested in the development of a replicable framework that can be disseminated to the applicant's local affiliates. At minimum, the framework should include a description of STW activities, how these activities were developed and implemented and the key stakeholders necessary for development and sustainability of the effort. Collaboration with existing STW local partnerships, workforce development councils or private industry councils should be included in the framework. In addition, the Departments are looking for how these STW activities fit in to a seamless system of education for learners.

Post secondary education must be included in the design framework. Effectiveness of the activities presented and how the needs of diverse student populations are addressed are critical to the application.

3. *A strategic plan of how information will be disseminated to the applicant's membership, and the greater labor community.* Include what formats will be utilized to distribute the design framework and STW activities collected under #1. The successful applicant will also be expected to actively disseminate the design framework including targeted training sessions, electronic media, publications, conferences, workshops, and other related means. In addition, the applicant should describe the target audience and describe the products to be developed.

4. *A description of high skill, high wage opportunities available for learners that includes options for education beyond secondary school.* The successful applicant will provide detailed information concerning opportunities within their respective industries, including present trends and future forecasts and the salary range expected for occupations affected. In addition, the applicant shall describe the range of work based learning opportunities available to students. Include information concerning post secondary options for learners and examples of successful articulation agreements with post secondary institutions. This information should be designed for distribution to students.

IV. Application Process

Eligible Applicants

National labor organizations representing employees in high skill, high wage occupations that have the experience and the capacity to build STW systems nationally. These applicants must demonstrate the ability to enlist the support and active participation of employers and/or trade associations related to the industry sector. In addition, key STW stakeholders, such as representatives from the education and labor communities, community-based organizations, parents and other related organizations must be included. Potential applicants however, should note the Departments' priority in seeking a labor organization or consortium with a thorough knowledge of STW and experience working with key STW stakeholders.

In preparing the proposal, please use the following headings and respond to the information in each of the following categories.

1. *Project Description.* Summarize the scope of the project, outline how its activities will relate to the four required areas of activity as described in the previous section, and provide succinct and measurable project objectives.

2. *Operational Plan.* Provide a detailed work plan that includes a description of proposed activities matched to the objectives presented in the Project Description, with accompanying time lines and individuals responsible. Provide an organizational structure and clear management plan detailing the staff and organizational resources devoted to the project. The applicant should clearly and in detail show how the proposed work will address each of the activities that are described in the section entitled *Required Areas of Effort.* The time lines should indicate what activities and related results are anticipated for the 12-month funding period.

3. *Results.* The applicant should provide specific and quantifiable outcomes that are anticipated from the proposed plan of activities. In identifying outcomes, the offeror should also explain how it will collect data, document results and use these results to inform its ongoing work plan.

4. *Capability.* The applicant should demonstrate the capability of the organization or consortium and the key staff assigned to undertake the work plan, including examples of prior efforts that demonstrate accomplishment in developing, implementing, managing and evaluating STW related activities. The offeror should also show knowledge and experience in working with trade associations, employers or employer associations.

V. Application Submittal

Applicants must submit four (4) copies of their proposal, with original

signatures. The applications shall be divided into two distinct parts: Part I—which contains Standard Form (SF) 424, Application for Federal Assistance,'' (Appendix A) and Budget Information Sheet,'' (Appendix B). All copies of the (SF) 424 MUST have original signatures of the legal entity applying for grant funding. Applicants shall indicate on the (SF) 424 the organization's IRS status, if applicable. According to the Lobbying Disclosure Act of 1995, Section 18, an organization described in Section 501(c)4 of the Internal Revenue Code of 1986 which engages in lobbying activities shall not be eligible for the receipt of federal funds constituting an award, grant, or loan. The Catalog of Federal Domestic Assistance number is 17.249. In addition, the budget shall include—on a separate page(s)—a detailed cost breakout of each line item on the Budget Information Sheet. Part II shall contain the program narrative that demonstrates the applicant's plan and capabilities in accordance with the evaluation criteria contained in this notice. Applicants MUST limit the program narrative section to no more than 30 double-spaced pages, on one side only. This includes any attachments. Applications that fail to meet the page limitation requirement will not be considered.

VI. Late Applications

Any application received after the exact date and time specified for receipt at the office designated in this notice will not be considered, unless it is received before awards are made and it—(a) was sent by registered or certified mail not later than the fifth calendar day before the date specified for receipt of applications (e.g., an application submitted in response to a solicitation requiring receipt of applications by the 20th of the month must have been mailed/postmarked by the 15th of that month); or (b) was sent by the U.S. Postal Service Express Mail Next Day Service to addresses not later than 5:00 P.M. at the place of mailing two working days prior to the date specified for receipt of applications. The term ''working days'' excludes weekends and federal holidays. The term ''postmarked'' means a printed, stamped or otherwise placed impression (exclusive of a postage meter machine impression) that is readily identifiable, without further action, as having been supplied or affixed on the date of mailing by an employee of the U.S. Postal Service.

VII. Hand Delivered Proposals

It is preferred that applications be mailed at least five days prior to the closing date. To be considered for funding, hand-delivered applications must be received by 4:00 P.M. (Eastern Time), on the closing date at the specified address.

TELEGRAPHED AND/FAXED APPLICATIONS WILL NOT BE HONORED. Failure to adhere to the above instructions will be a basis for a determination of nonresponsiveness. Overnight express mail from carriers other than the U.S. Postal Service will be considered hand delivered applications and must be received by the above specified date and time.

VIII. Funding Availability and Period of Performance

The Departments expect to make 2 to 3 awards with a total investment of approximately $900,000. The period of performance will be for 12 months from the date the grant is awarded. The Departments may at their option, provide additional funding for another 12 months depending upon fund availability and performance of the offeror.

Estimated Range of Awards. The Departments expect the total award amounts to range from approximately $250,000 to $450,000, for the total 12-month period.

IX. Review Process

A careful evaluation of applications will be made by a technical review panel who will evaluate the applications against the criteria listed below. The panel results are advisory in nature and not binding on the Grant Officer. The Government may elect to award the grant with or without discussions with the offeror. In situations without discussions, an award will be based on the offeror's signature on the (SF) 424, which constitutes a binding offer. Awards will be those in the best interest of the Government.

The criteria used to rate all proposals submitted are:

1. The extent to which the applicant outlines a clear and detailed plan of operation (40 points).

- Is the plan specific as to the activities proposed and how these activities will result in the identification of STW practices and the creation of a replicable design framework in local and regional union affiliates that represent workers in high skill, high wage occupations?
- Do the activities directly relate to the 4 areas of required effort?
- How will the proposed activities lead to sustainability of the federal investment to engage employers and unions in STW systems?
- Does the applicant describe strategies to provide opportunities for all students, including learners with disabilities?
- Does the applicant provide a detailed work plan including goals, objectives, timelines, person responsible and expected outcomes or products?
- Does the plan have clear numerical goals for increasing the number of local unions who will begin to be engaged in STW and for increasing the number of work-based learning positions for students?

2. The extent to which the applicant demonstrates the capability and capacity to meet the requirements of the solicitation (30 points).

- Does the applicant represent membership in high growth sectors of the economy?
- Does the industry sector represented by the applicant offer paid work-based learning opportunities for STW learners?
- Does the industry sector represented by the applicant offer high skill, high wage career opportunities for STW learners?
- Does the organization provide examples and documentation of prior related accomplishments in developing and implementing training initiatives for its membership?
- Does the applicant demonstrate the capacity to perform the range of required activities on a national scale including a comprehensive dissemination strategy that reaches the applicant's membership, key partners and the greater labor community?

3. The extent to which the applicant demonstrates the willingness and ability to engage and convene other organizations that are critical to the success of creating workbased learning opportunities for STW learners. (30 points)

- Does the applicant demonstrate a history of working with employers on workforce development and training programs for its membership?
- Does the applicant propose specific activities that are likely to result in strategic alliances with trade associations, education entities, employers and employer associations representing the specified industry?
- Does the applicant demonstrate a history of collaborating with a variety of partners at the national, state and community levels?
- Does the applicant present a strategy for informing STW grantees of its' activities and findings?

The grants will be awarded based on applicant response to the above mentioned criteria and that which is

otherwise advantageous to the Departments.

X. Reporting Requirements

The Departments are interested in insuring that grantees share lessons learned and products developed. To facilitate exchange of information, the Departments may occasionally convene grantees for meetings of approximately one-day duration. Grantees will also be asked to submit periodic progress reports in a format to be determined and on a quarterly-basis. After awards are made, identification of STW activities and the design framework are to be submitted to the National School-to-Work Office for approval before commencing activities related to this proposal. Conference plans and all products including publications shall be submitted for review to the National School-to-Work Office to ensure alignment and collaboration with ongoing national activities.

Signed in Washington, D.C., this 22nd day of June, 1999.

Laura Cesario,

Grant Officer.

APPENDIX A: (SF)424—Application Form
APPENDIX B: Budget Information Form

BILLING CODE 4510–30–P

APPLICATION FOR FEDERAL ASSISTANCE

APPENDIX A

OMB Approval No. 0348-0043

1. TYPE OF SUBMISSION: Application ☐ Construction ☐ Non-Construction / Preapplication ☐ Construction ☐ Non-Construction	2. DATE SUBMITTED	Applicant Identifier
	3. DATE RECEIVED BY STATE	State Application Identifier
	4. DATE RECEIVED BY FEDERAL AGENCY	Federal Identifier

5. APPLICANT INFORMATION

Legal Name:	Organizational Unit:
Address (give city, county, State and zip code):	Name and telephone number of the person to be contacted on matters involving this application (give area code):

6. EMPLOYER IDENTIFICATION NUMBER (EIN):

☐☐-☐☐☐☐☐☐☐

7. TYPE OF APPLICANT: (enter appropriate letter in box) ☐

A. State
B. County
C. Municipa
D. Township
E. Interstate
F. Intermunicipal
G. Special District
H Independent School Dist.
I State Controlled Institution of Higher Learning
J . Private University
K Indian Tribe
L. Individual
M. Profit Organization
N. Other (Specify): _____

8. TYPE OF APPLICATION:
☐ New ☐ Continuation ☐ Revision

If Revision, enter appropriate letter(s) in box(es): ☐ ☐

A. Increase Award B. Decrease Award C. Increase Duration
D. Decrease Duration Other (specify):

_____

9. NAME OF FEDERAL AGENCY:

10. CATALOG OF FEDERAL DOMESTIC ASSISTANCE NUMBER:

1 7 - 2 4 9

TITLE:

11. DESCRIPTIVE TITLE OF APPLICANT'S PROJECT:

12. AREAS AFFECTED BY PROJECT (cities, counties, States, etc.):

13. PROPOSED PROJECT:		14. CONGRESSIONAL DISTRICTS OF:	
Start Date	Ending Date	a. Applicant	b. Project

15. ESTIMATED FUNDING:	
a. Federal	$ .00
b. Applicant	$ .00
c. State	$ .00
d. Local	$ .00
e. Other	$ .00
f. Program Income	$ .00
g. TOTAL	$ .00

16. IS APPLICATION SUBJECT TO REVIEW BY STATE EXECUTIVE ORDER 12372 PROCESS?

a. YES. THIS PREAPPLICATION/APPLICATION WAS MADE AVAILABLE TO THE STATE EXECUTIVE ORDER 12372 PROCESS FOR REVIEW ON

DATE _____

b. NO. ☐ PROGRAM IS NOT COVERED BY E.O. 12372

☐ OR PROGRAM HAS NOT BEEN SELECTED BY STATE FOR REVIEW

17. IS THE APPLICANT DELINQUENT ON ANY FEDERAL DEBT?

☐ Yes If "Yes," attach an explanation. ☐ No

18. TO THE BEST OF MY KNOWLEDGE AND BELIEF, ALL DATA IN THIS APPLICATION/PREAPPLICATION ARE TRUE AND CORRECT. THE DOCUMENT HAS BEEN DULY AUTHORIZED BY THE GOVERNING BODY OF THE APPLICANT AND THE APPLICANT WILL COMPLY WITH THE ATTACHED ASSURANCES IF THE ASSISTANCE IS AWARDED.

a. Typed Name of Authorized Representative	b. Title	c. Telephone number
d. Signature of Authorized Representative		e. Date Signed

Previous Editions Not Usable

Standard Form 424 (REV 4-88)
Prescribed by OMB Circular A-102

Authorized for Local Reproduction

INSTRUCTIONS FOR THE SF 424

This is a standard form used by applicants as a required facesheet for preapplications and applications submitted for Federal assistance. It will be used by Federal agencies to obtain applicant certification that States which ave established a review and comment procedure in response to Executive Order 12372 and have selected the program to be included in their process, have been given an opportunity to review the applicant's submission.

Item:	Entry:
1.	Self-explanatory.
2.	Date application submitted to Federal agency (or State if applicable) & applicant's control number (if applicable).
3.	State use only (if applicable)
4.	If this application is to continue or revise an existing award, enter present Federal identifier number. If for a new project, leave blank.
5.	Legal name of applicant, name of primary organizational unit which will undertake this assistance activity, complete address of the applicant, and name and telephone number of the person to contact on matters related to this application.
6.	Enter Employer Identification Number (EIN) as assigned by the Internal Revenue Service.
7.	Enter the appropriate letter in the space provided.
8.	Check appropriate box and enter appropriate letter(s) in the space(s) provided. - "New" means a new assistance award. - "Continuation" means an extension for an additional funding/budget period for a project with a projected completion date. - "Revision" means any change in the Federal Government's financial obligation or contingent liability from an existing obligation.
9.	Name of Federal agency from which assistance is being requested with this application.
10.	Use the Catalog of Federal Domestic Assistance number and title of the program under which assistance is required.
11.	Enter a brief descriptive title of the project. If more than one program is involved, you should append an explanation on a separate sheet. If appropriate (e.g., construction or real property projects), attach a map showing project location. For preapplications, use a separate sheet to provide a summary description of the project.
12.	List only the largest political entities affected (e.g., State, counties, cities.
13.	Self-explanatory.
14.	List the applicant's Congressional District and any District(s) affected by the program or project.
15.	Amount requested or to be contributed during the first funding/budget period by each contributor. Value of in-kind contributions should be included on appropriate lines as applicable. If the action will result in a dollar change to an existing award, indicate only the amount of the change. For decreases, enclose the amounts in parentheses. If both basic and supplemental amounts are included, show breakdown on an attached sheet. For multiple program funding, use totals and show breakdown using same categories as item 15.
16.	Applicants should contact the State Single Point of Contact (SPOC) for Federal Executive Order 12372 to determine whether the application is subject to the State intergovernmental review process.
17.	This question applies to the applicant organization, not the person who signs as the authorized representative. Categories of debt include delinquent audit disallowances, loans and taxes.
18.	To be signed by the authorized representative of the applicant. A copy of the governing body's authorization for you to sign this application as official representative must be on file in the applicant's office. (Certain Federal agencies may require that this authorization be submitted as part of the application.)

PART II - BUDGET INFORMATION *APPENDIX B*

SECTION A - Budget Summary by Categories

	(A)	(B)	©)
1. Personnel			
2. Fringe Benefits (Rate)			
3. Travel			
4. Equipment			
5. Supplies			
6. Contractual			
7. Other			
8. Total, Direct Cost (Lines 1 through 7)			
9. Indirect Cost (Rate %)			
10. Training Cost/Stipends			
11. TOTAL Funds Requested (Lines 8 through 10)			

SECTION B - Cost Sharing/ Match Summary (if appropriate)

	(A)	(B)	(C)
1. Cash Contribution			
2. In-Kind Contribution			
3. TOTAL Cost Sharing / Match (Rate %)			

NOTE: *Use Column A to record funds requested for the initial period of performance (i.e. 12 months, 18 months, etc.); Column B to record changes to Column A (i.e. requests for additional funds or line item changes; and Column C to record the totals (A plus B).*

INSTRUCTIONS FOR PART II - BUDGET INFORMATION

SECTION A - Budget Summary by Categories

1. Personnel: Show salaries to be paid for project personnel which you are required to provide with W2 forms.

2. Fringe Benefits: Indicate the rate and amount of fringe benefits.

3. Travel: Indicate the amount requested for staff travel. Include funds to cover at least one trip to Washington, DC for project director or designee.

4. Equipment: Indicate the cost of non-expendable personal property that has a useful life of more than one year with a per unit cost of $5,000 or more. Also include a detailed description of equipment to be purchased including price information.

5. Supplies: Include the cost of consumable supplies and materials to be used during the project period.

6. Contractual: Show the amount to be used for (1) procurement contracts (except those which belong on other lines such as supplies and equipment); and (2) sub-contracts/grants.

7. Other: Indicate all direct costs not clearly covered by lines 1 through 6 above, including consultants.

8. Total, Direct Costs: Add lines 1 through 7.

9. Indirect Costs: Indicate the rate and amount of indirect costs. Please include a copy of your negotiated Indirect Cost Agreement.

10. Training /Stipend Cost: (If allowable)

11. Total Federal funds Requested: Show total of lines 8 through 10.

SECTION B - Cost Sharing/Matching Summary

Indicate the actual rate and amount of cost sharing/matching when there is a cost sharing/matching requirement. Also include percentage of total project cost and indicate source of cost sharing/matching funds, i.e. other Federal source or other Non-Federal source.

NOTE:

PLEASE INCLUDE A DETAILED COST ANALYSIS OF EACH LINE ITEM.

[FR Doc. 99–16226 Filed 6–24–99; 8:45 am]
BILLING CODE 4510–30–C

DEPARTMENT OF LABOR

Employment Standards Administration

Wage and Hour Division

Minimum Wages for Federal and Federally Assisted Construction; General Wage Determination Decisions

General wage determination decisions of the Secretary of Labor are issued in accordance with applicable law and are based on the information obtained by the Department of Labor from its study of local wage conditions and data made available from other sources. They specify the basic hourly wage rates and fringe benefits which are determined to be prevailing for the described classes of laborers and mechanics employed on construction projects of a similar character and in the localities specified therein.

The determinations in these decisions of prevailing rates and fringe benefits have been made in accordance with 29 CFR Part 1, by authority of the Secretary of Labor pursuant to the provisions of the Davis-Bacon Act of March 3, 1931, as amended (46 Stat. 1493, as amended, 40 U.S.C. 276a) and of other Federal statutes referred to in 29 CFR Part 1, Appendix, as well as such additional statutes as may from time to time be enacted containing provisions for the payment of wages determined to be prevailing by the Secretary of Labor in accordance with the Davis-Bacon Act. The prevailing rates and fringe benefits determined in these decisions shall, in accordance with the provisions of the foregoing statutes, constitute the minimum wages payable on Federal and federally assisted construction projects to laborers and mechanics of the specified classes engaged on contract work of the character and in the localities described therein.

Good cause is hereby found for not utilizing notice and public comment procedure thereon prior to the issuance of these determinations as prescribed in 5 U.S.C. 553 and not providing for delay in the effective date as prescribed in that section, because the necessity to issue current construction industry wage determinations frequently and in large volume causes procedures to be impractical and contrary to the public interest.

General wage determination decisions, and modifications and supersedes decisions thereto, contain no expiration dates and are effective from their date of notice in the **Federal Register**, or on the date written notice is received by the agency, whichever is earlier. These decisions are to be used in accordance with the provisions of 29 CFR Parts 1 and 5. Accordingly, the applicable decision, together with any modifications issued, must be made a part of every contract for performance of the described work within the geographic area indicated as required by an applicable Federal prevailing wage law and 29 CFR Part 5. The wage rates and fringe benefits, notice of which is published herein, and which are contained in the Government Printing Office (GPO) document entitled ''General Wage Determinations Issued Under the Davis-Bacon And Related Acts,'' shall be the minimum paid by contractors and subcontractors to laborers and mechanics.

Any person, organization, or governmental agency having an interest in the rates determined as prevailing is encouraged to submit wage rate and fringe benefit information for consideration by the Department. Further information and self-explanatory forms for the purpose of submitting this data may be obtained by writing to the U.S. Department of Labor, Employment Standards Administration, Wage and Hour Division, Division of Wage Determinations, 200 Constitution Avenue, NW, Room S–3014, Washington, DC 20210.

Modifications to General Wage Determination Decisions

The number of decisions listed in the Government Printing Office document entitled ''General Wage Determinations Issued Under the Davis-Bacon And Related Acts'' being modified are listed by Volume and State. Dates of publication in the **Federal Register** are in parentheses following the decisions being modified.

Volume I

Massachusetts
MA990001 (Mar. 12, 1999)
MA990002 (Mar. 12, 1999)
MA990005 (Mar. 12, 1999)
MA990007 (Mar. 12, 1999)
MA990009 (Mar. 12, 1999)
MA990017 (Mar. 12, 1999)
MA990018 (Mar. 12, 1999)
MA990019 (Mar. 12, 1999)
MA990020 (Mar. 12, 1999)
MA990021 (Mar. 12, 1999)
Rhode Island
RI990001 (Mar. 12, 1999)
RI990002 (Mar. 12, 1999)

Volume II

Pennsylvania
PA990007 (Mar. 12, 1999)
PA990010 (Mar. 12, 1999)
PA990012 (Mar. 12, 1999)
PA990014 (Mar. 12, 1999)
PA990023 (Mar. 12, 1999)
PA990024 (Mar. 12, 1999)
PA990051 (Mar. 12, 1999)
PA990062 (Mar. 12, 1999)
PA990065 (Mar. 12, 1999)

Volume III

Kentucky
KY990001 (Mar. 12, 1999)
KY990002 (Mar. 12, 1999)
KY990004 (Mar. 12, 1999)
KY990006 (Mar. 12, 1999)
KY990007 (Mar. 12, 1999)
KY990025 (Mar. 12, 1999)
KY990027 (Mar. 12, 1999)
KY990028 (Mar. 12, 1999)
KY990029 (Mar. 12, 1999)
KY990035 (Mar. 12, 1999)
KY990039 (Mar. 12, 1999)
KY990044 (Mar. 12, 1999)

Volume IV

Michigan
MI990007 (Mar. 12, 1999)
Wisconsin
WI990019 (Mar. 12, 1999)

Volume V

Iowa
IA990003 (Mar. 12, 1999)
IA990010 (Mar. 12, 1999)
IA990019 (Mar. 12, 1999)
IA990029 (Mar. 12, 1999)
IA990070 (Mar. 12, 1999)
IA990071 (Mar. 12, 1999)
IA990072 (Mar. 12, 1999)
IA990078 (Mar. 12, 1999)
IA990079 (Mar. 12, 1999)
Nebraska
NE990002 (Mar. 12, 1999)
NE990057 (Mar. 12, 1999)

Volume VI

Oregon
OR990001 (Mar. 12, 1999)
OR990004 (Mar. 12, 1999)
OR990017 (Mar. 12, 1999)
Washington
WA990001 (Mar. 12, 1999)
WA990002 (Mar. 12, 1999)

Volume VII

None

General Wage Determination Publication

General wage determinations issued under the Davis-Bacon and related Acts, including those noted above, may be found in the Government Printing Office (GPO) document entitled ''General Wage Determinations Issued Under The Davis-Bacon and Related Acts.'' This publication is available at each of the 50 Regional Government Depository Libraries and many of the 1,400 Government Depository Libraries across the country.

The General wage determinations issued under the Davis-Bacon and related Acts are available electronically by subscription to the FedWorld Bulletin Board System of the National Technical Information Service (NTIS) of the U.S. Department of Commerce at 1–800–363–2068

Hard-copy subscriptions may be purchased from: Superintendent of

Documents, U.S. Government Printing Office, Washington, DC 20402, (202) 512–1800.

When ordering hard-copy subscription(s), be sure to specify the State(s) of interest, since subscriptions may be ordered for any or all of the seven separate volumes, arranged by State. Subscriptions include an annual edition (issued in January or February) which includes all current general wage determinations for the States covered by each volume. Throughout the remainder of the year, regular weekly updates are distributed to subscribers.

Signed at Washington, DC This 18th Day of June 1999.

Carl J. Poleskey,

Chief, Branch of Construction Wage Determinations.

[FR Doc. 99–15965 Filed 6–24–99; 8:45 am]

BILLING CODE 4510–27–M

DEPARTMENT OF LABOR

Pension and Welfare Benefits Administration

[Application No. D–10694, et al.]

Proposed Exemptions; The Chase Manhattan Bank (CMB)

AGENCY: Pension and Welfare Benefits Administration, Labor.

ACTION: Notice of proposed exemptions.

SUMMARY: This document contains notices of pendency before the Department of Labor (the Department) of proposed exemptions from certain of the prohibited transaction restrictions of the Employee Retirement Income Security Act of 1974 (the Act) and/or the Internal Revenue Code of 1986 (the Code).

Written Comments and Hearing Requests

Unless otherwise stated in the Notice of Proposed Exemption, all interested persons are invited to submit written comments, and with respect to exemptions involving the fiduciary prohibitions of section 406(b) of the Act, requests for hearing within 45 days from the date of publication of this **Federal Register** Notice. Comments and requests for a hearing should state: (1) The name, address, and telephone number of the person making the comment or request, and (2) the nature of the person's interest in the exemption and the manner in which the person would be adversely affected by the exemption. A request for a hearing must also state the issues to be addressed and include a general description of the evidence to be presented at the hearing.

ADDRESSES: All written comments and request for a hearing (at least three copies) should be sent to the Pension and Welfare Benefits Administration, Office of Exemption Determinations, Room N–5649, U.S. Department of Labor, 200 Constitution Avenue, NW, Washington, DC 20210. Attention: Application No. stated in each Notice of Proposed Exemption. The applications for exemption and the comments received will be available for public inspection in the Public Documents Room of Pension and Welfare Benefits Administration, U.S. Department of Labor, Room N–5507, 200 Constitution Avenue, NW, Washington, DC 20210.

Notice to Interested Persons

Notice of the proposed exemptions will be provided to all interested persons in the manner agreed upon by the applicant and the Department within 15 days of the date of publication in the **Federal Register**. Such notice shall include a copy of the notice of proposed exemption as published in the **Federal Register** and shall inform interested persons of their right to comment and to request a hearing (where appropriate).

SUPPLEMENTARY INFORMATION: The proposed exemptions were requested in applications filed pursuant to section 408(a) of the Act and/or section 4975(c)(2) of the Code, and in accordance with procedures set forth in 29 CFR Part 2570, Subpart B (55 FR 32836, 32847, August 10, 1990). Effective December 31, 1978, section 102 of Reorganization Plan No. 4 of 1978 (43 FR 47713, October 17, 1978) transferred the authority of the Secretary of the Treasury to issue exemptions of the type requested to the Secretary of Labor. Therefore, these notices of proposed exemption are issued solely by the Department.

The applications contain representations with regard to the proposed exemptions which are summarized below. Interested persons are referred to the applications on file with the Department for a complete statement of the facts and representations.

The Chase Manhattan Bank (CMB); Located in New York, NY

[Application No. D–10694]

Proposed Exemption

The Department is considering granting an exemption under the authority of section 408(a) of the Act and section 4975(c)(2) of the Code [1] and in accordance with the procedures set forth in 29 CFR Part 2570, Subpart B (55 FR 32836, 32847, August 10, 1990).

Section I. Covered Transactions

If the exemption is granted, the restrictions of sections 406(a)(1)(A) through (D) and 406(b)(1) and (2) of the Act and the sanctions resulting from the application of section 4975 of the Code, by reason of section 4975(c)(1)(A) through (E) of the Code, shall not apply to the lending of securities to affiliates of The Chase Manhattan Corporation (CMC), which are engaged in CMC's capital markets line of business (Global Capital Markets), by employee benefit plans (the Client Plans), including commingled investment funds holding Client Plan assets, for which CMC, through its Global Investor Services line of Business, as operated through CMB and its affiliates (GIS), acts as directed trustee or custodian, and for which CMC through its Global Securities Lending Division or any other similar division of CMB or a U.S. affiliate of CMC (collectively, GSL) acts as securities lending agent or sub-agent and (2) to the receipt of compensation by GSL in connection with the proposed transactions, provided the general conditions set forth below in Section II are met.

Section II. General Conditions

(a) This exemption applies to loans of securities to Global Capital Markets, as operated through CMB in the United States (Global Capital Markets/U.S. or the U.S. Affiliated Borrower) and in the following foreign countries: the United Kingdom (Global Capital Markets/U.K.), Canada (Global Capital Markets/Canada), Australia (Global Capital Markets/Australia), Japan (Global Capital Markets/Japan) (collectively, the Foreign Affiliated Borrowers). Global Capital Markets will also include other companies or their successors which are affiliated with either CMB or CMC within these countries. [2]

(b) For each Client Plan, neither GIS, Global Capital Markets, GSL, nor any other division or affiliate of CMC has or exercises discretionary authority or control with respect to the investment of the assets of Client Plans involved in the transaction (other than with respect to the lending of securities designated by an independent fiduciary of a Client Plan as being available to lend and the investment of cash collateral after securities have been loaned and

[1] For purposes of this proposed exemption, references to specific provisions of Title I of the Act, unless otherwise specified, refer also to the corresponding provisions of the Code.

[2] Unless otherwise noted, Global Capital Markets will consist collectively of the above referenced entities.

collateral received), or renders investment advice (within the meaning of 29 CFR 2510.3–21(c)) with respect to those assets, including decisions concerning a Client Plan's acquisition and disposition of securities available for loan.

(c) Before a Client Plan participates in a securities lending program and before any loan of securities to Global Capital Markets is effected, a Client Plan fiduciary which is independent of Global Capital Markets must have—

(1) Authorized and approved a securities lending authorization agreement (the Agency Agreement) with GSL, where GSL is acting as the securities lending agent;

(2) Authorized and approved the primary securities lending authorization agreement (the Primary Lending Agreement) with the primary lending agent where GSL is lending securities under a sub-agency agreement (the Sub-Agency Agreement) with the primary lending agent; [3] and

(3) Approved the general terms of the securities loan agreement (the Loan Agreement) between such Client Plan and Global Capital Markets, the specific terms of which are negotiated and entered into by GSL.

(d) Each loan of securities by a Client Plan to Global Capital Markets is at market rates and terms which are at least as favorable to such Client Plan as if made at the same time and under the same circumstances to an unrelated party.

(e) The Client Plan may terminate the agency or sub-agency arrangement at any time without penalty to such Client Plan on five business days notice whereupon Global Capital Markets delivers securities identical to the borrowed securities (or the equivalent in the event of reorganization, recapitalization or merger of the issuer of the borrowed securities) to the Client Plan within—

(1) The customary delivery period for such securities;

(2) Five business days; or

(3) The time negotiated for such delivery by the Client Plan and Global Capital Markets, whichever is less.

(f) The Client Plan receives from Global Capital Markets (either by physical delivery or by book entry in a securities depository located in the United States, wire transfer or similar means) by the close of business on or before the day the loaned securities are delivered to Global Capital Markets, collateral consisting of cash, securities issued or guaranteed by the United States Government or its agencies or instrumentalities, or irrevocable United States bank letters of credit issued by a U.S. bank, which is a person other than Global Capital Markets or an affiliate thereof, or any combination thereof, or other collateral permitted under PTE 81–6 (as amended from time to time or, alternatively, any additional or superseding class exemption that may be issued to cover securities lending by employee benefit plans), having, as of the close of business on the preceding business day, a market value (or, in the case of a letter of credit, a stated amount) initially equal to at least 102 percent of the market value of the loaned securities.

(g) If the market value of the collateral on the close of trading on a business day is less than 100 percent of the market value of the borrowed securities at the close of business on that day, Global Capital Markets delivers additional collateral on the following day such that the market value of the collateral again equals 102 percent.

(h) The Loan Agreement gives the Client Plan a continuing security interest in, title to, or the rights of a secured creditor with respect to the collateral and a lien on the collateral and GSL monitors the level of the collateral daily.

(i) Before entering into a Loan Agreement, Global Capital Markets furnishes GSL the most recently available audited and unaudited statements of the financial condition of the applicable borrower within Global Capital Markets. Such statements are, in turn, provided by GSL to the Client Plan. At the time of the loan, Global Capital Markets gives prompt notice to the Client Plan fiduciary of any material adverse change in the borrower's financial condition since the date of the most recent financial statement furnished to the Client Plan. In the event of any such changes, GSL requests approval of the Client Plan to continue lending to Global Capital Markets before making any such additional loans. No new securities loans will be made until approval is received and each loan constitutes a representation by Global Capital Markets that there has been no such material adverse change.

(j) In return for lending securities, the Client Plan either—

(1) Receives a reasonable fee, which is related to the value of the borrowed securities and the duration of the loan; or

(2) Has the opportunity to derive compensation through the investment of cash collateral. (In the case of cash collateral, the Client Plan may pay a loan rebate or similar fee to Global Capital Markets if such fee is not greater than the fee the Client Plan would pay an unrelated party in a comparable arm's length transaction.)

(k) All procedures regarding the securities lending activities conform to the applicable provisions of PTEs 81–6 and PTE 82–63 (as amended from time, or alternatively, any additional or superseding class exemption that may be issued to cover securities lending by employee benefit plans).

(l) If Global Capital Markets defaults on the securities loan or enters bankruptcy, the collateral will not be available to Global Capital Markets or its creditors, but will be used to make the Client Plan whole. In this regard,

(1) In the event a Foreign Affiliated Borrower defaults on a loan, CMB will liquidate the loan collateral to purchase identical securities for the Client Plan. If the collateral is insufficient to accomplish such purchase, CMB will indemnify the Client Plan for any shortfall in the collateral plus interest on such amount and any transaction costs incurred (including attorney's fees of the Client Plan for legal actions arising out of the default on the loans or failure to indemnify properly under this provision). Alternatively, if such identical securities are not available on the market, the GSL will pay the Client Plan cash equal to—

(i) The market value of the borrowed securities as of the date they should have been returned to the Client Plan, plus

(ii) All the accrued financial benefits derived from the beneficial ownership of such loaned securities as of such date, plus;

(iii) Interest from such date to the date of payment. The lending Client Plans will be indemnified in the United States for any loans to the Foreign Affiliated Borrowers.

(2) In the event the U.S. Affiliated Borrower defaults on a loan, CMB will liquidate the loan collateral to purchase identical securities for the Client Plan. If the collateral is insufficient to accomplish such purchase, either CMB or the U.S. Affiliated Borrower will indemnify the Client Plan for any shortfall in the collateral plus interest on such amount and any transaction costs incurred (including attorney's fees of the Client Plan for legal actions arising out of the default on the loans or failure to indemnify property under this provision).

[3] The Department, herein, is not providing exemptive relief for securities lending transactions engaged in by primary lending agents, other than GSL, beyond that provided pursuant to Exemption (PTE) 81–6 (46 FR 7527, January 23, 1981, as amended at 52 FR 18754, May 19, 1987) and PTE 82–63 (47 FR 14804, April 6, 1982).

(m) The Client Plan receives the equivalent of all distributions made to holders of the borrowed securities during the term of the loan, including all interest, dividends and distributions on the loaned securities during the loan period.

(n) Prior to any Client Plan's approval of the lending of its securities to Global Capital Markets, copies of the notice of proposed exemption and the final exemption, if granted, are provided to the Client Plan.

(o) Each Client Plan receives a monthly report with respect to its securities lending transactions, including but not limited to the information described in Representation 24 of the proposed exemption, so that an independent fiduciary of the Client Plan may monitor the securities lending transactions with Global Capital Markets.

(p) Only Client Plans with total assets having an aggregate market value of at least $50 million are permitted to lend securities to Global Capital Markets; provided, however, that—

(1) In the case of two or more Client Plans which are maintained by the same employer, controlled group of corporations or employee organization (the Related Client Plans), whose assets are commingled for investment purposes in a single master trust or any other entity the assets of which are ''plan assets'' under 29 CFR 2510.3–101 (the Plan Asset Regulation), which entity is engaged in securities lending arrangements with Global Capital Markets, the foregoing $50 million requirement shall be deemed satisfied if such trust or other entity has aggregate assets which are in excess of $50 million; provided that if the fiduciary responsible for making the investment decision on behalf of such master trust or other entity is not the employer or an affiliate of the employer, such fiduciary has total assets under its management and control, exclusive of the $50 million threshold amount attributable to plan investment in the commingled entity, which are in excess of $100 million.

(2) In the case of two or more Client Plans which are not maintained by the same employer, controlled group of corporations or employee organization (the Unrelated Client Plans), whose assets are commingled for investment purposes in a group trust or any other form of entity the assets of which are ''plan assets'' under the Plan Asset Regulation, which entity is engaged in securities lending arrangements with Global Capital Markets, the foregoing $50 million requirement is satisfied if such trust or other entity has aggregate assets which are in excess of $50 million (excluding the assets of any Client Plan with respect to which the fiduciary responsible for making the investment decision on behalf of such group trust or other entity or any member of the controlled group of corporations including such fiduciary is the employer maintaining such Plan or an employee organization whose members are covered by such Plan). However, the fiduciary responsible for making the investment decision on behalf of such group trust or other entity—

(i) Has full investment responsibility with respect to plan assets invested therein; and

(ii) Has total assets under its management and control, exclusive of the $50 million threshold amount attributable to plan investment in the commingled entity, which are in excess of $100 million.

(In addition, none of the entities described above are formed for the sole purpose of making loans of securities.)

(q) With respect to each successive two week period, on average, at least 50 percent or more of the outstanding dollar value of securities loans negotiated on behalf of Client Plans by GSL, in the aggregate, will be to unrelated borrowers.

(r) In addition to the above, all loans involving Foreign Affiliated Borrowers within Global Capital Markets have the following supplemental requirements:

(1) Such Foreign Affiliated Borrower is registered as a bank or broker-dealer with—

(i) The Financial Services Authority or the Securities and Futures Authority, in the case of Global Capital Markets/U.K.;

(ii) The Office of the Superintendent of Financial Institutions (OSFI), or the Ontario Securities Commission and/or the Investment Dealers Association, in the case of Global Capital Markets/Canada;

(iii) The Australian Prudential Regulation Authority (APRA), or the Australian Securities & Investments Commission and/or the Australian Stock Exchange Limited, in the case of Global Capital Markets/Australia; and

(iv) The Ministry of Finance and/or the Tokyo Stock Exchange, in the case of Global Capital Markets/Japan.

(2) Such broker-dealer or bank is in compliance with all applicable provisions of Rule 15a–6 (17 CFR 240.15a–6) under the Securities Exchange Act of 1934 (the 1934 Act) which provides for foreign broker-dealers a limited exemption from United States registration requirements;

(3) All collateral is maintained in United States dollars or dollar-denominated securities or letters of credit of U.S. banks or any combination thereof, or other collateral permitted under PTE 81–6 (as amended from time to time, or alternatively, any additional or superseding class exemption that may be issued to cover securities lending by employee benefit plans);

(4) All collateral is held in the United States;

(5) The situs of the Loan Agreement is maintained in the United States;

(6) The lending Client Plans are indemnified by CMB in the United States for any transactions covered by this exemption with the Foreign Affiliated Borrower so that the Client Plans do not have to litigate in a foreign jurisdiction nor sue the Foreign Affiliated Borrower to realize on the indemnification; and

(7) Prior to the transaction, each Foreign Affiliated Borrower enters into a written agreement with GSL on behalf of the Client Plan whereby the Foreign Affiliated Borrower consents to service of process in the United States and to the jurisdiction of the courts of the United States with respect to the transactions described herein.

(s) CMB or Chase Securities Inc. (CSI) maintains, or causes to be maintained within the United States for a period of six years from the date of such transaction, in a manner that is convenient and accessible for audit and examination, such records as are necessary to enable the persons described in paragraph (t)(1) to determine whether the conditions of the exemption have been met, except that—

(1) A prohibited transaction will not be considered to have occurred if, due to circumstances beyond the control of CMB or CSI, the records are lost or destroyed prior to the end of the six year period; and

(2) No party in interest other than CMB or CSI shall be subject to the civil penalty that may be assessed under section 502(i) of the Act, or to the taxes imposed by section 4975(a) and (b) of the Code, if the records are not maintained, or are not available for examination as required below by paragraph (t)(1).

(t)(1) Except as provided in subparagraph (t)(2) of this paragraph and notwithstanding any provisions of subsections (a)(2) and (b) of section 504 of the Act, the records referred to in paragraph (s) are unconditionally available at their customary location during normal business hours by:

(i) Any duly authorized employee or representative of the Department, the Internal Revenue Service or the Securities and Exchange Commission (the SEC);

(ii) Any fiduciary of a participating Client Plan or any duly authorized representative of such fiduciary;

(iii) Any contributing employer to any participating Client Plan or any duly authorized employee representative of such employer; and

(iv) Any participant or beneficiary of any participating Client Plan, or any duly authorized representative of such participant or beneficiary.

(t)(2) None of the persons described above in paragraphs (t)(1)(ii)–(t)(1)(iv) of this paragraph (t)(1) are authorized to examine the trade secrets of CMB, the U.S. Affiliated Borrowers, or the Foreign Affiliated Borrowers or commercial or financial information which is privileged or confidential.

III. Definitions

For purposes of this proposed exemption,

(a) The terms ''CMB'' and ''CMC'' as referred to herein in Sections I and II, refer to The Chase Manhattan Bank and its parent, The Chase Manhattan Corporation.

(b) The term ''affiliate'' means any entity now or in the future, directly or indirectly, controlling, controlled by, or under common control with CMC or its successors. (For purposes of this definition, the term ''control'' means the power to exercise a controlling influence over the management or policies of a person other than an individual.)

(c) The term ''U.S. Affiliated Borrower'' means an affiliate of CMC that is a bank supervised by the United States or a State, or a broker-dealer registered under the 1934 Act.

(d) The term ''Foreign Affiliated Borrower'' means an affiliate of CMC that is a bank or a broker-dealer which is supervised by—

(1) The Financial Services Authority or the Securities and Futures Authority in the United Kingdom;

(2) OSFI, or the Ontario Securities Commission and/or the Investment Dealers Association in Canada;

(3) APRA, or the Australian Securities & Investments commission and/or the Australian Stock Exchange in Australia; and

(4) The Ministry of Finance and/or the Tokyo Stock Exchange in Japan.

Summary of Facts and Representations

1. *CMB* is a wholly owned subsidiary of CMC, a bank holding company organized under the laws of the State of Delaware. As a New York bank and a member of the Federal Reserve System, CMB is a ''bank'' as defined in both section 202(a)(2) of the Investment Advisers Act of 1940 (the Advisers Act) and section 581 of the Code.[4] As of March 31, 1998, CMB's total assets were $299 billion, of which $93.5 billion (or 31 percent) represented investment securities and money market assets and $125 billion (or 42 percent) represented loans.

2. *GIS*, the investor services line of business of CMC, as operated through CMB and certain of its affiliates, provides custodial services, trustee and related services to its customers. In this regard, GIS had more than $4.45 trillion of assets under custody and directed trusteeship as of December 31, 1997. As directed trustee or custodian, GIS services $412 billion of assets for U.S. pension plans, government plans, endowments and foundations. In addition, GIS currently acts as custodian for $751 billion of mutual fund assets.

3. *GSL*, which is comprised collectively of similar divisions of CMB or U.S. affiliates of CMC, is the securities lending line of business of CMC. It provides securities lending services to many of CMB's institutional clients. In this regard, GSL, on behalf of CMB's securities lending agents, negotiates the terms of loans with borrowers pursuant to a client-approved form of loan agreement, the terms of which may be modified from time to time with the approval of the client, and otherwise acts as a liaison between the lender and the borrower to facilitate the lending transaction. As securities lending agent, GSL has responsibility for monitoring receipt of all required collateral and for marking such collateral to market daily so that adequate levels of collateral are maintained. Further, to the extent agreed upon with the client, GSL is responsible for investing the cash collateral after securities have been loaned and cash collateral received. Finally, GSL monitors and evaluates, on a continuing basis, the performance and creditworthiness of the borrowers of securities.

In addition, GSL may be retained from time to time by other primary securities lending agents to provide securities lending services in a sub-agency capacity with respect to portfolio securities of the clients of such primary lending agents. As securities lending agent, GSL's role in the lending transaction (i.e., negotiating the terms of loans with borrowers pursuant to a client-approved form of loan agreement, the terms of which may be modified from time to time with the approval of the client, monitoring receipt of collateral, marking to market required collateral, and investing cash collateral) parallels the role under lending transactions in which GSL acts as primary lending agent on behalf of its clients.[5]

The borrowers with whom GSL usually transacts business as agent for the lender are typically U.S. broker-dealers who use borrowed securities to satisfy their trading requirements or to ''re-lend'' securities to other broker-dealers and others who need a particular security for various periods of time. All such borrowings by U.S. broker-dealers are required to conform to the Federal Reserve Board's Regulation T, to the extent applicable.

4. *Global Capital Markets* is one of the principal lines of business of CMC and its affiliates. Global Capital Markets acts through CMB and certain of its affiliates located in the United States as well as through certain Foreign Affiliated Borrowers that are located abroad. In other words, Global Capital Markets conducts its business through these different legal entities depending upon the jurisdiction and the specific product being sold. The entities currently comprising Global Capital Markets are Global Capital Markets/U.S., Global Capital Markets/U.K., Global Capital Markets/Canada, Global Capital Markets/Australia and Global Capital Markets/Japan. A description of each of these entities is presented below.

(a) *Global Capital Markets/U.S.* currently includes CMB and CSI, a U.S. broker-dealer registered with the SEC and located in New York, New York. However, in the future, it may include other broker-dealer entities that Global Capital Markets has established or acquired in the United States and operates as separate companies.

(b) *Global Capital Markets/U.K.* currently consists of Chase Manhattan International Limited (CMIL) and CMB's London branch (CMB/London). CMIL is a merchant bank based in London, England and it is supervised by the Financial Services Authority. CMIL is also a member of the Securities and Futures Authority and is subject to regulation by this organization with respect to its broker-dealer activities.

CMB/London is an office of CMB which was authorized by the former Bank of England to accept deposits in the United Kingdom. CMB/London is a listed institution under Section 43 of the Financial Services Act, the Money

[4] In relevant part, section 202(a)(2) of the Advisers Act and section 581 of the Code state that a ''bank'' is a banking institution, bank or trust company incorporated and doing business under the laws of the United States.

[5] As noted previously, the Department is not providing exemptive relief herein for securities lending transactions that are engaged in by primary lending agents, other than GSL and its affiliates beyond that provided by PTEs 81–6 and 82–63.

Market Regulations. In addition, CMB/London is regulated by the Securities and Futures Authority in the conduct of investment business in the United Kingdom. In mid-1997, the Financial Services Authority took over the supervision of banks in the United Kingdom including the Money Market Regulations. CMB/London is also subject to annual examination by bank examiners from the Federal Reserve Bank of New York and the State of New York.

(c) *Global Capital Markets/Canada* currently consists of Chase Securities Canada Inc. (CSCI), a broker-dealer located in Toronto. This entity is subject to regulation by the Ontario Securities Commission and the Investment Dealers Association.[6] In the future, Global Capital Markets Canada may be expanded to include CMB's banking affiliates that are based in Canada. These entities are subject to regulation in Canada by OSFI.

(d) *Global Capital Markets/Australia* currently consists of Chase Securities Australia, Limited (CSA), which is a broker-dealer located in Sydney. CSA holds a dealers license and is regulated by the Australian Securities & Investments Commission. In the future, Global Capital Markets/Australia may be expanded to include CMB's banking affiliates that are based in Australia. These entities will be subject to regulation by APRA.

(e) *Global Capital Markets/Japan* currently consists of Chase Securities Japan Limited (CSJL), a broker-dealer based in Tokyo, Japan. CSJL is subject to regulation by Japan's Ministry of Finance and the Tokyo Stock Exchange. In the future, Global Capital Markets/Japan may be expanded to include CMB's banking affiliates that are based in Japan. These entities will be subject to regulation by the Ministry of Finance.

Global Capital Markets also is a borrower of securities and acts in this capacity after full disclosure and consent with respect to many of its institutional clients that included public pension plans which are not covered by the Act. Global Capital Markets, as borrower, uses borrowed securities to meet its obligations to deliver securities in connection with its short sales, trade fails[7] or other similar situations and to engage in repurchase transactions with third parties. Acting as principal, Global Capital Markets actively engages in the borrowing and lending of securities with an outstanding loan volume of $48 billion as of May 31, 1998.

GSL currently does not lend to Global Capital Markets the securities of any of CMB's trust or custody clients covered under the Act. Although as noted above, after full disclosure and consent, GSL does lend securities to Global Capital Markets for certain of its clients which are not covered by the Act. Global Capital Markets and GSL have each developed an accounting system and safeguards to service the needs of their respective client bases. Whenever trades are effected between GSL, acting as securities lending agent, and Global Capital Markets, as borrower, such trades are accomplished in the same manner as between non-affiliated, independent third parties. In this regard, such trades take place pursuant to an established protocol, primarily over the telephone and through computer trading screens used by all participants in the industry in accordance with established protocol.[8]

5. GSL would like to offer employee benefit plans that are covered under the provisions of the Act and for which GSL serves as securities lending agent (i.e., the Client Plans)[9] the opportunity to participate in a securities lending program including Global Capital Markets as a potential borrower. In addition, CMB proposes that GSL and Global Capital Markets receive compensation in connection with such securities lending transactions. In this regard, CMB would like to offer Client Plans the opportunity to add as potential borrowers Global Capital Markets/U.S., Global Capital Markets/U.K., Global Capital Markets/Canada, Global Capital Markets/Australia and Global Capital Markets/Japan.

For each Client Plan, neither CMB, Global Capital Markets, GSL nor any other division or affiliate of CMB will have or exercise discretionary authority or control with respect to the investment of Client Plan assets in the transaction (other than with respect to the investment of cash collateral after securities have been loaned and collateral received) or render investment advice [within the meaning of 29 CFR 2510.3–12(c)] with respect to those assets, including decisions concerning a Client Plan's acquisition or disposition of securities available for loan. Accordingly, GSL will not be in a position to influence the portfolio holdings of Client Plans in a manner that might increase or decrease the securities available for lending to Global Capital Markets (or any other borrower). Thus, GSL's discretion will be limited to activities such as negotiating the terms of the securities loans with Global Capital Markets and (to the extent granted by the Client Plan fiduciary) investing any cash collateral received in respect of the loans.

Because, under the proposed arrangement, GSL would have discretion to lend Client Plan securities to Global Capital Markets, and because both GSL and parts of Global Capital Markets are divisions of CMB, the lending of securities to Global Capital Markets by a Client Plan for which GSL serves as securities lending agent (or sub-agent) may be outside the scope of relief provided by PTE 81–6 and PTE 82–63.[10] Further, loans to Foreign Affiliated Borrowers within Global Capital Markets would be outside of the relief granted in PTE 81–6.

Therefore, several safeguards, described more fully below, are incorporated in the application in order to ensure the protection of the Client Plan assets involved in the transactions. In addition, the applicants represent that the proposed lending program incorporates the conditions contained in PTE 81–6 and PTE 82–63 and will be in compliance with all applicable securities laws of the United States.

6. Although not registered with the United States SEC as broker-dealers, the Foreign Affiliated Borrowers within Global Capital Markets are subject to the rules, regulations and membership requirements of their respective regulatory entities identified above. For example, CMIL, the broker-dealer entity within Global Capital Markets/U.K. is

[6] CMB represents that Chase Securities Canada Inc., which is currently inactive, is the likely Canadian vehicle to participate in Global Capital Markets if it resumes business in Canada.

[7] According to CMB, a trade fail occurs when the seller of a security is unable to deliver the security to the buyer on the settlement date. Typically, this may occur when a security being sold is on loan or held by another custodian at the time a sale is executed and cannot be delivered to the seller before the settlement date. Under these circumstances, it is common for the seller of the security to borrow the security being sold in order to avoid a breach of its obligation to deliver securities to the buyer on the settlement date.

[8] In this regard, CMB maintains a set of procedures and policies designed to eliminate any sharing of client portfolio information between the personnel in its commercial banking and trust departments.

[9] For the sake of simplicity, future references to GSL's performance of services as securities lending agent should be deemed to include its activities as securities lending sub-agent and references to Client Plans should be deemed to refer to plans for which GSL is acting as sub-agent.

[10] PTE 81–6 provides an exemption under certain conditions from section 406(a)(1)(A) through (D) of the Act and the corresponding provisions of section 4975(c) of the Code for the lending of securities that are assets of an employee benefit plan to certain broker-dealers or banks which are parties in interest.

PTE 82–63 provides an exemption under specified conditions from section 406(b)(1) of the Act and section 4975(c)(1)(E) of the Code for the payment of compensation to a plan fiduciary for services rendered in connection with loans of plan assets that are securities.

subject to the rules, regulations and membership requirements of the Securities and Futures Authority. CSCI, the broker-dealer entity within Global Capital Markets/Canada is governed by the rules, regulations and membership requirements of the Ontario Securities Commission and the Investment Dealers Association. CSA, the broker-dealer entity within Global Capital Markets/Australia is governed by the licensing requirements of the Australian Securities & Investments Commission. CSJL, the broker-dealer entity within Global Capital Markets/Japan is governed by the rules, regulations and membership requirements of the Ministry of Finance and the Tokyo Stock Exchange.[11]

The Foreign Affiliated Borrowers within Global Capital Markets which are broker-dealers are subject to rules relating to minimum capitalization, reporting requirements, periodic examinations, client money and safe custody rules and books and records requirements with respect to client accounts. These rules and regulations set forth by the Foreign Broker-Dealer Regulatory Entities and the SEC share a common objective: The protection of the investor by the regulation of the securities industry. The rules promulgated by the Foreign Broker-Dealer Regulatory Entities require each firm which employs registered representatives or registered traders to have a positive tangible net worth and be able to meet its obligations as they may fall due. In addition, the rules of the Foreign Broker-Dealer Regulatory Entities set forth comprehensive financial resource and reporting/disclosure rules regarding capital adequacy. Further, to demonstrate capital adequacy, the rules of the Foreign Broker-Dealer Regulatory Entities impose reporting/disclosure requirements on broker-dealers with respect to risk management, internal controls, and transaction reporting and recordkeeping requirements to the effect that required records must be produced at the request of the Foreign Broker-Dealer Regulatory Entities. Finally, the rules and regulations of the Foreign Broker-Dealer Regulatory Entities impose potential fines and penalties on broker-dealers which establish a comprehensive disciplinary system.

7. Similarly, Global Capital Markets/U.K. is also subject to regulation in the United Kingdom by the Financial Services Authority, the successor regulator to the Bank of England. The Financial Services Authority issues licenses to banks in the United Kingdom, issues directives to address violations by or irregularities involving such banks, requires information from a bank or its auditor regarding supervisory matters and revokes bank licenses. The Financial Services Authority has established procedures for monitoring the activities of CMB in the United Kingdom through various statutory and regulatory standards. Among these standards are requirements for adequate internal controls, oversight and administration. On a recurring basis, CMB will be required to provide the Financial Services Authority with information regarding its activities in the United Kingdom, profit and loss, balance sheet, large exposures, foreign exchange exposures and country risk exposure. The regulator responsible for CMB's capital adequacy is the Board of Governors of the Federal Reserve System (the Board).

In addition, banks which may comprise Global Capital Markets/Canada will be subject to the rules of OSFI, an entity that licenses and regulates banks established in Canada as deposit-taking subsidiaries. OSFI licenses banks, issues directives to address violations by or irregularities involving a bank, requires information from the bank or its auditors regarding supervisory matters and revokes bank licenses.

Moreover, OSFI has established procedures for monitoring the activities of Canadian banks through various statutory and regulatory standards. Among those standards are requirements for capital adequacy, adequate internal controls, oversight and administration. On a recurring basis, a bank comprising Global Capital Markets/Canada will be required to provide OSFI with information regarding its activities in Canada, profit and loss, balance sheet, large exposures and foreign exchange exposures.

Legislation is pending in Canada which would permit a foreign bank to establish a branch in Canada. Under the proposed rule, the Minister of Finance would authorize the establishment of the branch and OSFI would license the bank branch to carry on business and may revoke the license. The bank branch would be required to have a minimum amount of unencumbered assets in Canada equal to a percentage of branch liabilities and must satisfy capital adequacy rules. Branches accepting deposits would be subject to a yearly audit by an external auditor and examination by OSFI.

APRA, which has taken over the bank supervisory duties of the Reserve Bank of Australia, will license and regulate banks comprising Global Capital Markets/Australia. APRA has the power to issue and revoke bank licenses. In addition, APRA may issue directives to address violations by or irregularities involving banks and it requires information from a bank or its auditors regarding supervisory matters. APRA has established procedures for monitoring the activities of banks that will comprise Global Capital Markets/Australia through various statutory and regulatory standards. Among those standards are requirements for capital adequacy, internal controls, oversight and administration. On a recurring basis, banks comprising Global Capital Markets/Australia will be required to provide APRA with information regarding their activities in Australia, profit and loss, balance sheets and large exposures.

APRA's licensing and supervision of Global Capital Markets/Australia foreign bank branches is similar to that of locally-incorporated banks. While APRA monitors credit risk concentrations of foreign bank branches, endowed capital in Australia and capital-based large risk exposure limits are the responsibility of the home supervisor which is the Board.[12]

8. Aside from the protections afforded by the Foreign Broker-Dealer Regulatory Entities and in the case of Global Capital Markets/U.K., the Financial Services Authority, CMB represents that the Foreign Affiliated Borrowers will comply with all applicable provisions of Rule 15a–6 of the 1934 Act. Rule 15a–6 provides foreign broker-dealers with a limited exemption from SEC registration requirements and, as described below, offers additional protections.[13]

[11] The Securities and Futures Authority, the Ministry of Finance, the Tokyo Stock Exchange, the Australian Securities & Investments Commission, the Australian Stock Exchange Limited, the Ontario Securities Commission and the Investment Dealers Association are collectively referred to herein as the Foreign Broker-Dealer Regulatory Entities.

[12] For a description of the Ministry of Finance, which regulates both banks and broker-dealers in Japan, see Representations 3 and 4 of the Notice of Proposed Exemption for the Union Bank of Switzerland and UBS Securities, LLC (63 FR 15452, 15455, March 31, 1998).

[13] According to the applicants, section 3(a)(4) of the 1934 Act defines ''broker'' to mean ''any person engaged in the business of effecting transactions in securities for the account of others, but it does not include a bank. Section 3(a)(5) of the 1934 Act provides a similar exclusion for ''banks'' in the definition of the term ''dealer.'' However, section 3(a)(6) of the 1934 Act defines ''bank'' to mean a banking institution organized under the laws of the United States or a State of the United States. Further, Rule 15(a)(6)(b)(2) provides that the term ''foreign broker or dealer'' means ''any non-U.S. resident person * * * whose securities activities, if conducted in the United States, would be described by the definition of ''broker'' or ''dealer'' in sections 3(a)(4) or 3(a)(5) of the [1934] Act.'' Therefore, the test of whether an entity is a ''foreign broker'' or

Specifically, Rule 15a–6 provides an exemption from U.S. broker-dealer registration for a foreign broker-dealer that induces or attempts to induce the purchase or sale of any security (including over-the-counter equity and debt options) by a ''U.S. institutional investor'' or a ''major U.S. institutional investor,'' provided that the foreign broker-dealer, among other things, enters into these transactions through a U.S. registered broker-dealer intermediary. The term ''U.S. institutional investor,'' as defined in Rule 15a–6(b)(7), includes an employee benefit plan within the meaning of the Act if (a) the investment decision is made by a plan fiduciary, as defined in section 3(21) of the Act, which is either a bank, savings and loan association, insurance company or registered investment adviser, or (b) the employee benefit plan has total assets in excess of $5 million, or (c) the employee benefit plan is a self-directed plan with investment decisions made solely by persons that are ''accredited investors'' as defined in Rule 501(a)(1) of Regulation D of the Securities Exchange Act of 1933, as amended. The term ''major U.S. institutional investor'' is defined in Rule 15a–6(b)(4) as a person that is a U.S. institutional investor that has total assets in excess of $100 million or an investment adviser registered under Section 203 of the Investment Advisers Act of 1940 that has total assets under management in excess of $100 million.[14]

9. CMB represents that under Rule 15a–6, a foreign broker-dealer that induces or attempts to induce the purchase or sale of any security by a U.S. institutional or a major U.S. institutional investor must, among other things—

(a) Consent to service of process for any civil action brought by, or proceeding before, the SEC or any self-regulatory organization;

(b) Provide the SEC (upon request or pursuant to agreements reached between any foreign securities authority, including any foreign government, and the SEC or the U.S. Government) with any information or documents within the possession, custody or control of the foreign broker-dealer, any testimony of any such foreign associated persons, and any assistance in taking the evidence of other persons, wherever located, that the SEC requests and that relates to transactions effected pursuant to the Rule;

(c) Rely on the U.S. registered broker-dealer[15] through which the transactions with the U.S. institutional and major U.S. institutional investors are effected to (among other things):

(1) Effect the transactions, other than negotiating their terms;

(2) Issue all required confirmations and statements;

(3) As between the foreign broker-dealer and the U.S. registered broker-dealer, extend or arrange for the extension of credit in connection with the transactions;

(4) Maintain required books and records relating to the transactions, including those required by Rules 17a–3 (Records to be Made by Certain Exchange Members) and 17a–4 (Records to be Preserved by Certain Exchange Members, Brokers and Dealers) of the 1934 Act;

(5) Receive, deliver and safeguard funds and securities in connection with the transactions on behalf of the U.S. institutional investor or major U.S. institutional investor in compliance with Rule 15c3–3 of the 1934 Act (Customer Protection—Reserves and Custody of Securities);[16] and

(6) Participate in certain oral communications (e.g., telephone calls) between the foreign associated person and the U.S. institutional investor (not the major U.S. institutional investor), and accompany the foreign associated person on certain visits with both U.S. institutional and major U.S. institutional investors. By virtue of this participation, the U.S. registered broker-dealer would become responsible for the content of all these communications.[17]

10. Where GSL is the direct securities lending agent, a fiduciary of a Client Plan which is independent of CMB, GSL, Global Capital Markets, and any other division or affiliate of CMB will sign a securities lending authorization agreement with GSL (i.e., the Agency Agreement) before that Client Plan participates in a securities lending program. The Agency Agreement will, among other things, describe the operation of the lending program, prescribe the form of securities Loan Agreement to be entered into on behalf of the Client Plan with borrowers, specify the securities which are available to be loaned and prescribe that a borrower (including Global Capital Markets) is required to deliver collateral having a value in excess of the value of the loaned securities (i.e., not less than 102 percent or, in some cases, a higher agreed-upon percentage). In addition, the Agency Agreement will provide that the securities will be marked to market daily and incorporate a list of permissible borrowers, including the specified legal entities within Global Capital Markets.

The Agency Agreement will also set forth the basis and rate for GSL's compensation from a Client Plan for the performance of securities lending services. As set forth more fully below, in the case of loans secured by cash collateral, the basis for GSL's compensation will be an agreed-upon fixed percentage share of return, if any on cash collateral plus an investment management fee for investing the cash collateral. The actual income that will be divided between the Client Plan and GSL will vary each day according to the investment performance from each loan of securities. With respect to loans secured by non-cash collateral, GSL's compensation will be an agreed-upon fixed percentage share of the securities lending fee. GSL's share of the return on cash collateral and the securities lending fees with respect to any Client Plan will be negotiated with that Client Plan and thereafter set forth in the Agency Agreement on the date such agreement is executed.

The Agency Agreement will contain provisions to the effect that if Global Capital Markets is designated by a Client Plan as an approved borrower (a) the Client Plan will acknowledge that certain segments of Global Capital Markets, GSL and GIS are, or may be deemed to be, the same legal entity, and (b) GSL will represent to the Client Plan that each and every loan made to Global Capital Markets on behalf of such Client Plan will be at market rates and will, in no event, be less favorable to the Client Plan than a loan of such securities, made at the same time and under the same circumstances, to an unaffiliated borrower.

A Client Plan may terminate the Agency Agreement at any time, without penalty to such plan, on five business days' notice.[18]

''dealer'' is based on the nature of such foreign entity's activities and, with certain exceptions, only banks that are regulated by either the United States or a State of the United States are excluded from the definition of the term ''broker'' or ''dealer.'' Thus, for purposes of this exemption request, the applicants are willing to represent that they will comply with the applicable provisions and relevant SEC interpretations and amendments of Rule 15a–6.

[14] See also SEC No-Action Letter issued to Cleary, Gottlieb, Steen & Hamilton on April 9, 1997 (hereinafter, the April 9, No-Action Letter), expanding the definition of the term ''Major U.S. Institutional Investor.''

[15] The Foreign Affiliated Borrowers, in lieu of relying on a U.S. broker-dealer and to the extent permitted by applicable U.S. securities law, may rely on a U.S. bank or trust company, including GSL, to perform this role.

[16] Under certain circumstances described in the April 9, 1997 No-Action Letter (e.g., clearance and settlement transactions), there may be direct transfers of funds and securities between the Client Plan and a Foreign Affiliated Borrower. CMB notes that in such situations, the U.S. registered broker-dealer will not be acting as a principal with respect to any duties it is required to undertake pursuant to Rule 15a–6.

[17] Under certain circumstances, the foreign associated person may have direct communications and contact with the U.S. Institutional Investor. See April 9 SEC No-Action Letter.

[18] CMB represents that if investments of cash collateral must be terminated or liquidated prematurely due to a Client Plan's termination of the Agency Agreement, penalties might be chargeable by issuers of the investments (or

Continued

11. When GSL is lending securities under a sub-agency arrangement, the primary lending agent will enter into a Primary Lending Agreement with a fiduciary of a Client Plan that is independent of such primary lending agent, GSL or Global Capital Markets, before the Client Plan participates in the securities lending program. Under the terms of the sub-agency arrangement, it is the responsibility of the primary lending agent to obtain the approval of the fiduciary of the Client Plan to such Primary Lending Agreement. The primary lending agent will be independent of GSL and Global Capital Markets. As CMB will not be a party to the Primary Lending Agreement, the sub-agency arrangement between GSL and the primary lending agent will obligate the primary lending agent to provide assurance that the primary lending agent was independent of the fiduciary of the Client Plan.

The Primary Lending Agreement will contain substantive provisions akin to those in the Agency Agreement relating to the description of the operation of the lending program, use of an approved form of Loan Agreement, specification of securities which are available to be loaned, prescription that a borrower is required to deliver collateral having a specified value in excess of the value of the loaned securities and a list of approved borrowers (including the various legal entities comprising Global Capital Markets). The Primary Lending Agreement will specifically authorize the primary lending agent to appoint sub-agents, including GSL, to facilitate the performance of securities lending agency functions. Where GSL is appointed to act as a sub-agent, GSL will require that the primary lending agent represent to GSL that the primary lending agent has received prior approval of, or has the authority to make the decision to hire GSL.

The Primary Lending Agreement also will set forth the basis and the method for the primary lending agent's compensation from the Client Plan for the performance of securities lending services and will authorize the primary lending agent to pay a portion of its fee, as the primary lending agent determines in its sole discretion, to any sub-agent(s) it retains pursuant to the authority granted under such agreement. Each Primary Lending Agreement will be subject to a termination provision similar to that contained in the Agency Agreement if the primary lending agent is relying on PTE 81–6.

Pursuant to its authority to appoint sub-agents, the primary lending agent will enter into a securities lending sub-agency agreement (i.e., the Sub-Agency Agreement) with GSL under which the primary lending agent will retain and authorize GSL, as sub-agent, to lend securities of the primary lending agent's Client Plans, in a manner consistent with the terms and conditions as specified in the Primary Lending Agreement. The Primary Lending Agreement and the Sub-Agency Agreement will not necessarily have identical terms because the procedures that CMB uses in operating its lending program will be spelled out in its form agreement and these may not be identical to how the primary lending agent operates its own program. For example, CMB may require that its Sub-Agency Agreement contain certain specific provisions which the primary lending agent may not have requested from the Client Plan. One such requirement is that the collateral initially equal 102 percent of the value of the loaned securities, whereas the primary lending agent may have been authorized to make loans of securities at less than 102 percent collateral. CMB may also require recordkeeping in addition to that specified in the Primary Lending Agreement and may require different notice provisions.

Each Sub-Agency Agreement will contain provisions which are in substance comparable to those described above, which would appear in an Agency Agreement in situations where GSL is the primary lending agent. In this regard, GSL will make the same representation in the Sub-Agency Agreement, as described above, with respect to arm's length dealings with Global Capital Markets. The Sub-Agency Agreement will also set forth the basis and rate for GSL's compensation to be paid by the primary lending agent.

12. GSL, on behalf of the Client Plans, will enter into a Loan Agreement with each applicable entity within Global Capital Markets that is in substantially similar form to the one used from time to time with all other borrowers. The Loan Agreement will not be identical to that used with an unrelated party, in part, because special disclosures must be made to the Client Plans regarding the relationship between GSL and certain parts of Global Capital Markets and GIS. However, the economic terms and procedures required by the Loan Agreement will be identical to those negotiated with unrelated borrowers.

The form of the Loan Agreement also will be the industry or the market standard for loans to the borrowers in the country where the borrower is domiciled. It will describe the lender's rights against the borrower in the country of the borrower's domicile and represent that these rights will be equivalent under U.S. law.[19] The independent fiduciary for each Client Plan will approve the terms of the Loan Agreement through its authorization of the lending program and such fiduciary will be provided a copy of the applicable Loan Agreement from GSL upon request.

The Loan Agreement will specify, among other things, the right of GSL, as lending agent on behalf of the Client Plan, to terminate a loan at any time on not more than five business days' notice and the lending agent's rights in the event of any default by the borrower. In addition, the Loan Agreement will contain a requirement that Global Capital Markets must pay all transfer fees and transfer taxes related to loans of securities. Further, the Loan Agreement will describe the basis for compensation to the Client Plan for lending securities to Global Capital Markets under each category of collateral.

Before entering into the Loan Agreement, Global Capital Markets will furnish GSL the most recently available audited and unaudited statements of the financial condition of the applicable borrower within Global Capital Markets. In turn, such statements will be provided by GSL to the Client Plan before such plan is asked to approve the terms of the Loan Agreement. The Loan Agreement will contain a requirement that Global Capital Markets must provide to the Client Plan prompt notice, at the time of a loan by such Client Plan, of any material adverse changes in the borrower's financial condition since the date of the most recently furnished financial statements.[20] If any such changes have

counterparties on the investments) in accordance with the investment terms.

[19] For example, the form of Loan Agreement between GSL and a Foreign Affiliated Borrower differs from the standard U.S. loan agreement. Under the Global Capital Markets/U.K. Loan Agreement, the Client Plan receives title to (rather than a pledge of or a security interest in) the collateral.

[20] Like broker-dealers registered with the SEC, the broker-dealer entities within Global Capital Markets/U.K., Global Capital Markets/Japan and Global Capital Markets/Australia will be subject to capital adequacy provisions of their respective regulatory entities. It is represented that such rules require the Foreign Affiliated Borrowers to maintain, at all times, financial resources in excess of its financial resources requirement (the Financial Resources Requirement). For this purpose, financial resources include equity capital, approved subordinated debt and retained earnings, less deductions for illiquid assets. The Financial Resources Requirement includes capital requirements for market risk, credit risk, foreign exchange risk and large exposures. The rules of each applicable Foreign Broker-Dealer Regulatory

taken place, GSL will not make any further loans to Global Capital Markets unless an independent fiduciary of that Client Plan has approved the loan in view of the changed financial condition. Conversely, if the borrower within Global Capital Markets fails to provide notice of such a change in its financial condition, such failure will trigger an event of default under the Loan Agreement.

13. As noted above, the agreement by GSL to provide securities lending services, as agent, to a Client Plan will be embodied in the Agency Agreement. The Client Plan and GSL will, prior to the commencement of any lending activity, agree to the arrangement, as described above, under which GSL will be compensated for its services as lending agent. The agreed-upon fee arrangement will be set forth in the Agency Agreement and thereby will be subject to the prior written approval of a fiduciary of the Client Plan which is independent of Global Capital Markets and GSL.

Similarly, with respect to arrangements under which GSL is acting as securities lending sub-agent, the agreed upon fee arrangement of the primary lending agent will be set forth in the Primary Lending Agreement, and such agreement will specifically authorize the primary lending agent to pay a portion of such fee, as the primary lending agent determines in its sole discretion, to any sub-agent, including GSL, which is to provide securities lending services to the Client Plans.[21] A Client Plan will be provided with any reasonably available information which is necessary for the Client Plan's independent fiduciary to make a determination whether to enter into or continue to participate under the Agency Agreement (or the Primary Lending Agreement) and any other reasonably available information which such fiduciary may reasonably request.

14. Each time a Client Plan lends securities to Global Capital Markets pursuant to the Loan Agreement, GSL will reflect in its records, the material terms of the loan, including the securities to be loaned, the required level of collateral and the fee receivable or rebate payable. When a loan is collateralized with cash, the cash will be invested for the benefit of and at the risk of the Client Plan, and resulting earnings (net of a rebate to the borrower and the fee to the lending agent) comprise the compensation to the Client Plan with respect to such loan. Where collateral consists of obligations other than cash, the borrower will pay a fee (loan premium) directly to the lending Client Plan, which fee will be shared with GSL as agreed under the Agency Agreement. The terms of each loan will be at least as favorable to the Client Plan as those of a comparable arm's length transaction between unrelated parties.

15. The Client Plan will receive the equivalent of all distributions made to holders of the borrowed securities during the term of any loan, including, but not limited to, cash dividends, interest payments, shares of stock as a result of stock splits and rights to purchase additional securities or other distributions. The Loan Agreement will provide that the Client Plan may terminate any loan at any time. Upon a termination, Global Capital Markets will be contractually obligated to return the loaned securities to the Client Plan within five business days of notification (or such longer period of time permitted under PTE 81–6, as amended or superseded). If Global Capital Markets fails to return the securities within the designated time, the Client Plan will have the right under the Loan Agreement to purchase securities identical to the borrowed securities and apply the collateral to payment of the purchase price and any other expenses of the Client Plan associated with the sale and/or purchase.

16. The Client Plan will receive collateral from Global Capital Markets (by physical delivery, book entry in a U.S. securities depository, wire transfer or similar means) by the close of business on or before the day the loaned securities are delivered to Global Capital Markets. The collateral will consist of cash, securities issued or guaranteed by the U.S. Government or its agencies or irrevocable U.S. bank letters of credit (issued by a person other than CMB or its affiliates) or any combination thereof, of such other types of collateral which might be permitted by the Department under PTE 81–6, as amended or superseded, relating to securities lending activities. The market value of the collateral on the close of business on the day preceding the day of the loan will be at least 102 percent of the market value of the loaned securities. The Loan Agreement will give the Client Plan a continuing security interest in, title to, or the rights of a secured creditor with respect to the collateral and a lien on the collateral. GSL will monitor the level of the collateral daily. If the market value of the collateral falls below 100 percent (or such greater percentage as agreed to by the parties) of that of the loaned securities, GSL will require Global Capital Markets to deliver by the close of business the next day sufficient additional collateral to bring the level back to at least 102 percent.

17. As securities lending agent for the Client Plans, GSL also provides ancillary services such as investing the cash collateral received with respect to such securities loans. Such investment management services can be provided on a separate account basis or through CMB's commingled funds. For these services, GSL is paid an investment management fee by the Client Plans, either through a direct charge to the Client Plan for individually-managed accounts and some commingled funds, or, in the case of other commingled funds, through an investment management fee charged against the commingled fund's assets. Retaining GSL to provide such investment management services is optional and within the total discretion of the Client Plan. Alternatively, the independent fiduciary of the Client Plan may select its own manager, an unrelated mutual or collective fund, or another vehicle of his choice. The selected investment vehicle must be acceptable to GSL. GSL neither selects the collateral investment vehicle nor has any authority or responsibility to do so. To further protect the Client Plans' assets in these transactions, GSL's procedures for lending securities will comply with the applicable conditions of PTE 81–6 and PTE 82–63 (including with respect to any commingled funds that may participate in the securities lending program).

18. GSL will establish each day separate written schedules of lending fees and rebate rates to assure uniformity of treatment among borrowing brokers and to limit the discretion that GSL would have in negotiating securities loans to Global Capital Markets. Comparable loans to all borrowers of a given security on that day will be made at rates or lending fees

Entity, require that if a firm's financial resources fall below a certain percentage (e.g., 120 percent with respect to the Securities and Futures Authority and 140 percent with respect to the Ministry of Finance and the Tokyo Stock Exchange) of its Financial Resources Requirement, the Foreign Broker-Dealer Regulatory Entity must be notified so that it can examine the terms of the firm's financial position and require an infusion of more capital, if needed. In addition, a breach of the requirement to maintain financial resources in excess of the Financial Resources Requirement may lead to sanctions by the applicable Foreign Broker-Dealer Regulatory Entity. If the breach is not promptly resolved, such Foreign Broker-Dealer Regulatory Entity may restrict the firm's activities.

[21] The foregoing provisions describe arrangements comparable to conditions (c) and (d) of PTE 82–63 which require that the payment of compensation to a ''lending fiduciary'' is made under a written instrument and is subject to prior written authorization of an independent ''authorizing fiduciary.'' In the event that a commingled investment fund will participate in the securities lending program, the special rule applicable to such funds concerning the authorization of the compensation arrangement set forth in condition (f) of PTE 82–63 will be satisfied.

on the relevant daily schedules or at rates or lending fees which may be more advantageous to the Client Plans. In no case will loans be made to Global Capital Markets at rates or lending fees that are less advantageous to the Client Plans than those on the schedule. The daily schedule of rebate rates will be based on the current value of the clients' reinvestment vehicles and on market conditions, as reflected by demand for securities by borrowers other than Global Capital Markets. As with rebate rates, the daily schedule of lending fees will also be based on market conditions, as reflected by demand for securities by borrowers other than Global Capital Markets, and will generally track the rebate rates with respect to the same security or class of security.

GSL will adopt maximum daily rebate rates for cash collateral payable to Global Capital Markets on behalf of a lending Client Plan. Separate maximum daily rebate rates will be established with respect to securities loans of designated securities classes of securities such as U.S. Government securities, U.S. equities and corporate bonds, international fixed income securities and international equities. With respect to each designated class of securities, the maximum rebate rate will be the lower of (a) a rate based upon an agreed-upon interest rate index (such as one month LIBOR for Fed funds) and (b) the client's initial or expected reinvestment rate for the relevant cash collateral, minus a stated percentage of such reinvestment rate, as pre-approved by the independent fiduciary of the Client Plan. Thus, when cash is used as collateral, at least initially, the daily rebate rate will always be lower than the rate of return to the Client Plans from authorized investments for cash collateral by such stated percentage as shall be pre-approved by the independent fiduciary. GSL will submit the formula for determining the maximum daily rebate rate to an independent fiduciary of the Client Plan for approval before lending any securities to Global Capital Markets on behalf of such plan.

GSL will also adopt minimum daily lending fees for non-cash collateral payable by Global Capital Markets to GSL on behalf of the Client Plan and GSL. Separate minimum daily gross lending fees will be established with respect to loans of designated classes of securities such as U.S. Government securities, U.S. equities and corporate bonds, international fixed income securities and international equities. With respect to each designated class of securities, the minimum lending fee will be stated as a percentage of the principal value of the loaned securities. GSL will submit such gross minimum daily lending fees to an independent fiduciary of a Client Plan for approval before initially lending any securities to Global Capital Markets on behalf of such Client Plan.

19. For collateral other than cash, the lending fees charged the previous day will be reviewed by GSL for competitiveness. Based on the demand of the marketplace, this daily fee historically has remained relatively constant although it may be subject to fluctuation due to market conditions.[22] Because during any successive two week period, on average, at least 50 percent or more of securities loans negotiated on behalf of Client Plans, in the aggregate, will be to unrelated brokers or dealers, the competitiveness of GSL's fee schedule will be continuously tested in the marketplace.[23] Accordingly, loans to Global Capital Markets should result in competitive rate income to the lending Client Plan.

20. The method of determining the daily securities lending rates (fees and rebates), the minimum lending fees payable by Global Capital Markets and the maximum rebate payable to Global Capital Markets will be specified in an exhibit attached to the Agency Agreement to be executed between the independent fiduciary of the Client Plan and GSL in cases where GSL is the direct securities lending agent.

21. Should GSL recognize prior to the end of a business day that, with respect to new and/or existing loans, it must change the rebate rate or lending fee formula in the best interest of the Client Plans, it may do so with respect to Global Capital Markets.[24] If GSL changes the lending fee formula or the rebate rate formula on any outstanding loan to Global Capital Markets (except for any change resulting from a change in the value of any third party independent index with respect to which the fee or rebate is calculated, or if the formula will always be beneficial to the Client Plan), GSL, by the close of business on the date of such adjustment, will provide the independent fiduciary of the Client Plan with notice that it has changed such fee formula or rebate rate formula with respect to such loan and that the Client Plan may terminate such loan at any time. Allowing GSL to request a modification to the lending fee or the rebate rate formula with respect to an existing loan to Global Capital Markets when market conditions change will be beneficial to the Client Plans. In the absence of the ability to make such modification, Global Capital Markets may be forced by market conditions to terminate the loan and seek better terms elsewhere. Such termination may then force the Client Plan to seek new borrowers for its securities who, in light of the changed market conditions, are likely to negotiate for the lending fee or rebate rate which Global Capital Markets would have received or paid had GSL had the written authority from the independent fiduciary of the Client Plan to decrease the lending fee or increase the rebate rate.

22. Although GSL will normally lend securities to requesting borrowers and include for these purposes Global Capital Markets on a ''first come, first served'' basis as a means of assuring uniformity of treatment among borrowers, the applicants recognize that, in some cases, it may not be possible to adhere to a ''first come, first served'' allocation. This can occur, for instance where (a) the credit limit established for such borrower by GSL and/or the Client Plan has already been satisfied; (b) the ''first in line'' borrower is not approved as a borrower by the particular Client Plan whose securities are sought to be borrowed; and (c) the ''first in line'' borrower cannot be ascertained, as an operational matter, because several borrowers spoke to different GSL representatives at or about the same time with respect to the same security. In situations (a) and (b), loans would normally be effected with the ''second in line.'' In situation (c), securities would be allocated equitably among all eligible borrowers.

23. The Client Plans will be indemnified by CMB or CSI in the event Global Capital Markets fails to return borrowed securities. In the event a Foreign Affiliated Borrower within Global Capital Markets defaults on a loan, CMB will liquidate the loan collateral to purchase identical securities for the Client Plan. In the event the collateral is insufficient to accomplish such purchase, CMB will indemnify the Client Plan for any shortfall in the collateral plus interest on such amount and any transaction costs incurred (including attorney's fees of the Client Plan for legal actions arising out of the default on the loans or failure to indemnify properly under this

[22] With respect to domestic securities and international debt securities the daily lending fee is currently at least 1/20th of one percent of the principal value of the loaned securities. With respect to international equity securities, the daily fee is currently 1/5th of one percent of the principal value of the loaned securities.

[23] This 50 percent requirement will apply regardless of the type of collateral used to secure the loan.

[24] GSL will not initiate any modification in such rates or fees which would be detrimental to Client Plans.

provision). Alternatively, if such identical securities are not available on the market, CMB will pay the Client Plan cash equal to the market value of the borrowed securities as of the date they would have been returned to the Client Plan plus all the accrued financial benefits derived from the beneficial ownership of such loaned securities. The lending Client Plans will be indemnified by CMB in the United States for any loans to the Foreign Affiliated Borrower.

When the U.S. Affiliated Borrower is CSI, a U.S. registered broker-dealer, either CMB or CSI will indemnify the Client Plan against losses. CMB will liquidate the loan collateral to purchase identical securities for the Client Plan. If the collateral is insufficient to accomplish such purchase, either CMB or CSI will indemnify the Client Plan for any shortfall in the collateral plus interest on such amount and any transaction costs incurred (including attorney's fees of the Client Plan for legal actions arising out of the default on the loans or failure to indemnify properly under this provision.)

24. Each Client Plan participating in the lending program will be sent a monthly transaction report which will provide a list of all security loans outstanding and closed for a specified period. The report will identify for each open loan position, the securities involved, the value of the security for collateralization purposes, the current value of the collateral, the rebate or loan premium (as the case may be) at which the security is loaned, and the number of days the security has been on loan. In order to provide the means for monitoring lending activity, rates on loans to Global Capital Markets compared with loans to other brokers and the level of collateral on the loans, the monthly report will show, on a daily basis, the market value of all outstanding securities loans to Global Capital Markets and to other borrowers as compared to the total collateral held for both categories of loans. In addition, the monthly report will state the daily fees where collateral other than cash is utilized and will specify the details used to establish the daily rebate payable to all brokers where cash is used as collateral. Further, the monthly report will state, on a daily basis, the rates at which securities are loaned to Global Capital Markets as compared with those at which securities are loaned to other brokers. This statement will give the Client Plan's independent fiduciary information which can be compared to that contained in the daily rebate schedule.

25. In all cases, GSL will maintain records sufficient to assure compliance with its representation that all loans to Global Capital Markets are effectively at arm's length terms. These records will be provided to the appropriate independent fiduciary of a Client Plan in the manner and format agreed to with such fiduciary and without charge to that Client Plan. With respect to the proposed transactions, GSL will make and retain for six months, tape recordings evidencing all securities loan transactions with Global Capital Markets. Also, if requested by the lending customer, GSL will provide daily confirmations of securities lending transactions. Further, if requested by the customer, GSL will provide weekly or daily reports setting forth for each transaction made or outstanding during the relevant reporting period the following information: The loaned securities, the related collateral, the rebates and loan premiums and such other information in such format as is agreed to by the parties. Finally, prior to a Client Plan's approval of a securities lending program, GSL will provide a Client Plan fiduciary with a copy of the proposed exemption and the notice granting the exemption.

26. Only Client Plans with total assets having an aggregate market value of at least $50 million are permitted to lend securities to Global Capital Markets. In the case of two or more Client Plans which are maintained by the same employer, controlled group of corporations or employee organization (i.e., the Related Client Plans), whose assets are commingled for investment purposes in a single master trust or any other entity the assets of which are ''plan assets'' under the Plan Asset Regulation), which entity is engaged in securities lending arrangements with Global Capital Markets, the foregoing $50 million requirement will be satisfied if such trust or other entity has aggregate assets which are in excess of $50 million. However, if the fiduciary responsible for making the investment decision on behalf of such master trust or other entity is not the employer or an affiliate of the employer, such fiduciary must have total assets under its management and control, exclusive of the $50 million threshold amount attributable to plan investment in the commingled entity, which are in excess of $100 million.

In the case of two or more Client Plans which are not maintained by the same employer, controlled group of corporations or employee organization (i.e., the Unrelated Client Plans), whose assets are commingled for investment purposes in a group trust or any other form of entity the assets of which are ''plan assets'' under the Plan Asset Regulation, which entity is engaged in securities lending arrangements with Global Capital Markets, the foregoing $50 million requirement will be satisfied if such trust or other entity has aggregate assets which are in excess of $50 million (excluding the assets of any Client Plan with respect to which the fiduciary responsible for making the investment decision on behalf of such group trust or other entity or any member of the controlled group of corporations including such fiduciary is the employer maintaining such Client Plan or an employee organization whose members are covered by such Client Plan). However, the fiduciary responsible for making the investment decision on behalf of such group trust or other entity (a) must have full investment responsibility with respect to plan assets invested therein [25]; and (b) must have total assets under its management and control, exclusive of the $50 million threshold amount attributable to plan investment in the commingled entity, which are in excess of $100 million.

In addition, none of the entities described above must be formed for the sole purpose of making loans of securities.

27. With respect to loans involving the Foreign Affiliated Borrowers within Global Capital Markets, the following additional safeguards will be applicable: (a) All collateral will be maintained in U.S. dollars, U.S. dollar-denominated securities or letters of credit of U.S. banks; (b) all collateral will be held in the United States; [26] (c) the situs of the Loan Agreement will be maintained in the United States; and (d) CMB will indemnify the lending Client Plan in the United States for any loans to a Foreign Affiliated Borrower so that the Client Plan will not have to litigate in a foreign jurisdiction nor sue the Foreign Affiliated Borrower to realize on the indemnification; (e) prior to the transaction, the Foreign Affiliated Borrower will enter into a written agreement with GSL on behalf of the Client Plan whereby the Foreign Affiliated Borrower consents to the

[25] For purposes of this proposed exemption, the term ''full investment responsibility'' means that the fudiciary responsible for making investment decisions on behalf of the group trust or other form of entity, has and exercises discretionary management authority over all of the assets of the group trust or other plan assets entity.

[26] Under United Kingdom law, the securities lending agreement between GSL and CMIL provides, among other things, that all title and interest in the loaned securities passes to the borrower and all rights, title and interest in the collateral passes to the lending Client Plan.

jurisdiction of the courts of the United States with respect to the transactions described herein; and (f) each Foreign Affiliated Borrower will be (1)(i) a deposit taking or merchant banking institution supervised by the banking authorities of the jurisdiction in which it is located; or (ii) a broker-dealer supervised by a regulatory authority in the country in which it is located; and (2) in compliance with all applicable provisions of Rule 15a–6 under the 1934 Act.

28. In summary, it is represented that the proposed transactions will satisfy the statutory criteria for an exemption under section 408(a) of the Act because:

(a) The form of the Loan Agreement pursuant to which any securities loan is effected will be approved by a fiduciary of the Client Plan which is independent of GSL before a Client Plan lends any securities to Global Capital Markets.

(b) The lending arrangements (1) will permit the Client Plans to lend to Global Capital Markets and (2) will enable the Client Plans to diversify the list of eligible borrowers and earn additional income from the loaned securities on a secured basis, while continuing to receive any dividends, interest payments and other distributions due on those securities.

(c) The Client Plans will receive sufficient information concerning the financial condition of the borrowers within Global Capital Markets before the Client Plan lends any securities to any of those entities.

(d) The collateral on each loan to Global Capital Markets initially will be at least 102 percent of the market value of the loaned securities, which is in excess of the 100 percent collateral required under PTE 81–6, and will be monitored daily by GSL.

(e) The Client Plans will receive a monthly report which provides an independent fiduciary of the Client Plans with information on loan activity, fees, loan return/yield and the rates on loans to Global Capital Markets as compared with loans to other brokers and the level of collateral on the loans.

(f) Neither GSL, GIS, Global Capital Markets nor any other division or affiliate of CMC will have discretionary authority or control over a Client Plan's assets, including the acquisition or disposition of securities available for loan.

(g) The terms of each loan will be at least as favorable to a Client Plan as those of a comparable arm's length transaction with an unrelated party.

(h) The fee payable by Global Capital Markets to the Client Plan for the use of the securities (or the loan rebate fee payable by the Client Plan to Global Capital Markets if the loan is collateralized with cash) will be set forth in the applicable report provided to the independent fiduciary of the Client Plan.

(i) The Client Plan will be able to terminate the lending arrangement without penalty within five business days after providing written notice of termination to GSL.

(j) All of the procedures under the transactions will conform to the applicable provisions of PTE 81–6 and PTE 82–63 and also will be in compliance with the applicable banking or securities laws of the United States, the United Kingdom, Canada, Australia and Japan.

FOR FURTHER INFORMATION CONTACT: Ms. Jan D. Broady of the Department, telephone (202) 219–8881. (This is not a toll-free number.)

Henry H. Borland III and Pat Borland; Located in Downers Grove, IL

[Exemption Application No. D–10707]

Proposed Exemption

The Department is considering granting an exemption under the authority of section 408(a) of the Act and section 4975 (c)(2) of the Code and in accordance with the procedures set forth in 29 CFR Part 2570, Subpart B (55 FR 32826, 32847, August 10, 1990). If the exemption is granted, the sanctions resulting from the application of section 4975 of the Code, by reason of section 4975(c)(1)(A) through (E) of the Code, shall not apply to the proposed sale (the Sale) of certain improved real property (the Property) by the H.H. Borland, Inc. Profit Sharing Plan (the Plan) to the trustees of the Plan, Henry H. Borland III (Mr. Borland) and Pat Borland (collectively, the Trustees), disqualified persons with respect to the Plan,[27] provided that the following conditions are met:

(a) The terms and conditions of the Sale are at least as favorable to the Plan as those obtainable in an arm's length transaction with an unrelated party;

(b) The Trustees will purchase the Property from the Plan for the greater of $200,000 or the fair market value of the Property as of the date of the transaction as determined by a qualified, independent appraiser;

(c) The Sale will be a one-time transaction for cash; and

(d) The Plan will pay no fees or commissions in connection with the Sale.

Summary of Facts and Representations

1. H.H. Borland, Inc. (H.H. Borland) is an Illinois corporation engaged in the purchase and sale of real estate. H.H. Borland is the sponsor of the Plan which is a defined contribution profit sharing plan located in Downers Grove, Illinois. The Plan had one participant, Mr. Borland, and approximately $1,100,000 in total assets as of November 21, 1998. The trustees of the Plan are Mr. Borland and Pat Borland (collectively, the Trustees). Among the Plan's assets is the Property which is a single family residence located at 1213 Red Silver Court, Downers Grove, Illinois. The Property was acquired by the Plan from the estate of Wilma L. Winterfield, a party unrelated to the Plan, for $160,875 on January 30, 1991.

2. The applicants represent that, since its acquisition, the Property has generated rental income (the Rental Income) for the Plan. In this regard, the applicants represent that the Plan rented the Property to unrelated third parties from January 30, 1991 until November 30, 1998 and received rental income (the Rental Income) totaling $132,404.25. The applicants represent that from November 30, 1998 to present, the Plan has not rented the Property and the Property has not generated any income for the Plan. The applicants additionally represent that at no time have the Trustees occupied or otherwise benefitted from the Plan's ownership of the Property.

3. The applicants represent that the Plan has incurred certain expenses (the Expenses) as a result of the Plan's ownership of the Property. In this regard, the applicants represent that the Plan has incurred a total of $47,648.72 in real estate taxes and insurance costs associated with the Plan's ownership of the Property. The applicants represent that, after deducting the Expenses from the Rental Income, the Plan has received an annual yield of 6.6% relative to the Property's acquisition price due to the Plan's ownership of the Property.

3. The Property was appraised on January 25, 1999 by David M. Benacke (Mr. Benacke) for Appraisal Resources, Ltd., an appraisal company independent of the Plan and the Trustees. Mr. Benacke, an Illinois certified real estate appraiser, used the sales comparison approach to evaluate the fair market value of the Property. Mr. Benacke represents that he compared the Property to three similar properties which were the subject of recent sales. Based on these comparisons, Mr.

[27] Since Mr. Borland is the sole owner of the Plan sponsor and the only participant in the Plan, there is no jurisdiction under Title I of the Act pursuant to 29 CFR § 2510.3(b). However, there is jurisdiction under Title II of the Act pursuant to section 4975 of the Code.

Benacke represents that the fair market value of the Property was $200,000, as of January 25, 1999.

4. The applicants propose a sale of the Property (i.e., the Sale) by the Plan to the Trustees for $200,000, the Property's current fair market value. The applicants represent that the Sale is administratively feasible in that it will be a one-time transaction for cash in which the Plan will pay no fees or commissions. The applicants also represent that the Sale is in the best interest of the Plan since the Property is currently vacant and any future rental of the Property to unrelated parties will require substantial Plan expenditures for renovations. In addition, the applicants represent that the Sale is protective of the Plan since the Plan will receive cash for the Property which the Plan can invest in assets appropriate for the Plan's sole participant.

5. In summary, the applicant represent that the proposed transaction satisfies the criteria of section 408(a) of the Act because:

(a) The terms and conditions of the Sale are at least as favorable to the Plan as those obtainable in an arm's length transaction with an unrelated party;

(b) The Trustees will purchase the Property from the Plan for the greater of $200,000 or the fair market value of the Property as of the date of the transaction as determined by a qualified, independent appraiser;

(c) The Sale will be a one-time transaction for cash; and

(d) The Plan will pay no fees or commissions in connection with the Sale.

FOR FURTHER INFORMATION CONTACT: Christopher J. Motta of the Department, telephone (202) 219–8883 (This is not a toll free number).

General Information

The attention of interested persons is directed to the following:

(1) The fact that a transaction is the subject of an exemption under section 408(a) of the Act and/or section 4975(c)(2) of the Code does not relieve a fiduciary or other party in interest of disqualified person from certain other provisions of the Act and/or the Code, including any prohibited transaction provisions to which the exemption does not apply and the general fiduciary responsibility provisions of section 404 of the Act, which among other things require a fiduciary to discharge his duties respecting the plan solely in the interest of the participants and beneficiaries of the plan and in a prudent fashion in accordance with section 404(a)(1)(b) of the act; nor does it affect the requirement of section 401(a) of the Code that the plan must operate for the exclusive benefit of the employees of the employer maintaining the plan and their beneficiaries;

(2) Before an exemption may be granted under section 408(a) of the Act and/or section 4975(c)(2) of the Code, the Department must find that the exemption is administratively feasible, in the interests of the plan and of its participants and beneficiaries and protective of the rights of participants and beneficiaries of the plan;

(3) The proposed exemptions, if granted, will be supplemental to, and not in derogation of, any other provisions of the Act and/or the Code, including statutory or administrative exemptions and transitional rules. Furthermore, the fact that a transaction is subject to an administrative or statutory exemption is not dispositive of whether the transaction is in fact a prohibited transaction; and

(4) The proposed exemptions, if granted, will be subject to the express condition that the material facts and representations contained in each application are true and complete and accurately describe all material terms of the transaction which is the subject of the exemption. In the case of continuing exemption transactions, if any of the material facts or representations described in the application change after the exemption is granted, the exemption will cease to apply as of the date of such change. In the event of any such change, application for a new exemption may be made to the Department.

Signed at Washington, DC, this 22nd day of June 1999.

Ivan Strasfeld,

Director of Exemption Determinations, Pension and Welfare Benefits Administration, Department of Labor.

[FR Doc. 99–16215 Filed 6–24–99; 8:45 am]

BILLING CODE 4510–29–P

DEPARTMENT OF LABOR

Pension and Welfare Benefits Administration

[Prohibited Transaction Exemption 99–23; Exemption Application No. D–10021, et al.]

Grant of Individual Exemptions; First Security Corporation (FSC), et al.

AGENCY: Pension and Welfare Benefits Administration, Labor.

ACTION: Grant of Individual Exemptions.

SUMMARY: This document contains exemptions issued by the Department of Labor (the Department) from certain of the prohibited transaction restrictions of the Employee Retirement Income Security Act of 1974 (the Act) and/or the Internal Revenue Code of 1986 (the Code).

Notices were published in the **Federal Register** of the pendency before the Department of proposals to grant such exemptions. The notices set forth a summary of facts and representations contained in each application for exemption and referred interested persons to the respective applications for a complete statement of the facts and representations. The applications have been available for public inspection at the Department in Washington, DC The notices also invited interested persons to submit comments on the requested exemptions to the Department. In addition the notices stated that any interested person might submit a written request that a public hearing be held (where appropriate). The applicants have represented that they have complied with the requirements of the notification to interested persons. No public comments and no requests for a hearing, unless otherwise stated, were received by the Department.

The notices of proposed exemption were issued and the exemptions are being granted solely by the Department because, effective December 31, 1978, section 102 of Reorganization Plan No. 4 of 1978 (43 FR 47713, October 17, 1978) transferred the authority of the Secretary of the Treasury to issue exemptions of the type proposed to the Secretary of Labor.

Statutory Findings

In accordance with section 408(a) of the Act and/or section 4975(c)(2) of the Code and the procedures set forth in 29 CFR part 2570, subpart B (55 FR 32836, 32847, August 10, 1990) and based upon the entire record, the Department makes the following findings:

(a) The exemptions are administratively feasible;

(b) They are in the interests of the plans and their participants and beneficiaries; and

(c) They are protective of the rights of the participants and beneficiaries of the plans.

First Security Corporation (FSC), Located in Salt Lake City, UT

[Prohibited Transaction Exemption 99–23; Exemption Application No. D–10021]

Exemption

Section I. Exemption for the IN-KIND Transfer of Assets

The restrictions of section 406(a) and section 406(b) of the Act and the sanctions resulting from the application of section 4975 of the Code by reason of

section 4975(c)(1)(A) through (F) shall not apply to the in-kind transfers, that occurred on December 28, 1994, to any open-end investment company (the Fund or Funds) registered under the Investment Company Act of 1940 (the Investment Company Act) to which FSC or any of its affiliates (collectively, First Security) serves as investment adviser and/or may provide other services, of the assets of various employee benefit plans (the Plan or Plans) that are held in certain collective investment funds (the CIF or CIFs) maintained by First Security, in exchange for shares of such Funds, provided that the following conditions were met:

(a) A fiduciary (the Second Fiduciary) which was acting on behalf of each affected Plan and which was independent of and unrelated to First Security, as defined in paragraph (g) of Section II below, received advance written notice of the in-kind transfer of assets of the CIFs in exchange for shares of the Funds, a full and detailed written disclosure of information concerning any such Fund including, but not limited to—

(1) A current prospectus for each of the Funds in which such Plan considered investing;

(2) A statement describing the fees for investment management, investment advisory, or other similar services, any fees for secondary services (Secondary Services), as defined in paragraph (h) of Section II below, and all other fees charged to or paid by the Plan and by the Funds to First Security, including the nature and extent of any differential between the rates of such fees;

(3) The reasons why First Security considered such investment to be appropriate for the Plan;

(4) A statement describing whether there were any limitations applicable to First Security with respect to which assets of a Plan may be invested in the Funds, and, if so, the nature of such limitations; and

(5) When available, upon request of the Second Fiduciary, a copy of the proposed exemption and/or a copy of the final exemption.

(b) On the basis of the information described above in paragraph (a) of this Section I, the Second Fiduciary authorized in writing—

(1) The investment of assets of the Plans in shares of the Fund, in connection with the transactions set forth in Section I;

(2) The investment portfolios of the Funds in which the assets of the Plans were invested; and

(3) The fees received by First Security in connection with its services to the Funds. Such authorization by the Second Fiduciary was consistent with the responsibilities, obligations and duties imposed on fiduciaries by Part 4 of Title I of the Act.

(c) All transferred assets were securities for which market quotations were readily available, or cash.

(d) No sales commissions or redemption fees, including fees that are payable pursuant to Rule 12b-1 of the Investment Company Act, were paid by the Plans in connection with the in-kind transfers of the assets of the CIFs in exchange for shares of the Funds.

(e) Neither First Security nor its affiliates, including any officers or directors, would be permitted to purchase from or sell to any of the Plans shares of any of the Funds.

(f) The Plans were not sponsored or maintained by First Security.

(g) The transferred assets in exchange for shares of such Funds constituted the Plan's *pro rata* portion of all assets that were held by the CIFs prior to the transfer. A Plan not electing to invest in the Fund received a cash payment representing a *pro rata* portion of the assets of the terminating CIF before the final liquidation took place.

(h) The CIFs received shares of the Funds that had a total net asset value equal to the value of the transferred assets of the CIFs exchanged for such shares on the date of transfer.

(i) The current market value of the assets of the CIFs transferred in-kind in exchange for shares of the Funds was determined in a single valuation performed in the same manner and at the close of business on the same day, using independent sources in accordance with the procedures set forth in Rule 17a–7(b) (Rule 17a–7) under the Investment Company Act, as amended from time to time or any successor rule, regulation, or similar pronouncement and the procedures established pursuant to Rule 17a–7 for the valuation of such assets. Such procedures required that all securities for which a current market price could not be obtained by reference to the last sale price for transactions reported on a recognized securities exchange or NASDAQ were to be valued based on an average of the highest current independent bid and lowest current independent offer, as of the close of business on the last business day preceding the CIF transfers determined on the basis of reasonable inquiry from at least three sources that are broker-dealers or pricing services independent of First Security.

(j) Not later than 30 days after completion of each in-kind transfer of assets of the CIFs in exchange for shares of the Funds, First Security sent by regular mail to the Second Fiduciary, which was acting on behalf of each affected Plan and which was independent of and unrelated to First Security, as defined in paragraph (g) of Section II below, a written confirmation that contained the following information:

(1) The identity of each of the assets that was valued for purposes of the transaction in accordance with Rule 17a–7(b)(4) under the Investment Company Act;

(2) The current market price, as of the date of the transfer, of each such security involved in the purchase of Fund shares; and

(3) The identity of each pricing service or market maker consulted in determining the value of such assets.

(k) Not later than 90 days after completion of each in-kind transfer of assets of the CIFs in exchange for shares of the Funds, First Security sent by regular mail to the Second Fiduciary, which was acting on behalf of each affected Plan and which was independent of and unrelated to First Security, as defined in paragraph (g) of Section II below, a written confirmation that contained the following information:

(1) The number of CIF units held by each affected Plan immediately before the conversion (and the related per unit value and the aggregate dollar value of the units transferred); and

(2) The number of shares in the Funds that were held by each affected Plan following the conversion (and the related per share net asset value and the aggregate dollar value of the shares received).

(l) As to each individual Plan, the combined total of all fees received by First Security for the provision of services to the Plans, and in connection with the provision of services to any of the Funds in which the Plans hold shares acquired in connection with an in-kind transfer transaction, was not in excess of ''reasonable compensation'' within the meaning of section 408(b)(2) of the Act.

(m) On an ongoing basis, First Security has provided and will continue to provide a Plan investing in a Fund—

(1) At least annually with a copy of an updated prospectus of such Fund; and

(2) At least annually with a report or statement (which may take the form of the most recent financial report, the current statement of additional information, or some other written statement) which contains a description of all fees paid by the Fund to First Security, upon the request of such Second Fiduciary.

(n) All dealings between the Plans and any of the Funds have been and will remain on a basis no less favorable to such Plans than dealings between the Funds and other shareholders holding the same class of shares as the Plans.

(o) First Security has maintained and will maintain for a period of 6 years the records necessary to enable the persons, as described below in paragraph (p)(1) of this Section I, to determine whether the conditions of this exemption have been met, except that:

(1) A prohibited transaction will not be considered to have occurred if, due to circumstances beyond the control of First Security, the records are lost or destroyed prior to the end of the 6 year period; and

(2) No party in interest, other than First Security, shall be subject to the civil penalty that may be assessed under section 502(i) of the Act, or to the taxes imposed by section 4975(a) and (b) of the Code, if the records are not maintained, or are not available for examination as required below by paragraph (p) of this Section I.

(p)(1) Except as provided in paragraph (p)(2) of this Section I and notwithstanding any provisions of subsection (a)(2) and (b) of section 504 of the Act, the records referred to in paragraph (o) of Section II above are unconditionally available at their customary location for examination during normal business hours by—

(A) Any duly authorized employee or representative of the Department, the Internal Revenue Service or the Securities and Exchange Commission;

(B) Any fiduciary of each of the Plans who has authority to acquire or dispose of shares of any of the Funds owned by such a Plan, or any duly authorized employee or representative of such fiduciary; and

(C) Any participant or beneficiary of the Plans or duly authorized employee or representative of such participant or beneficiary.

(2) None of the persons described in paragraph (p)(1)(B) and (p)(1)(C) of this Section I shall be authorized to examine trade secrets of First Security, or commercial or financial information which is privileged or confidential.

Section II. Definitions

For purposes of this exemption,

(a) The term ''First Security'' means FSC and any affiliate of FSC, as defined in paragraph (b) of this Section II.

(b) An ''affiliate'' of a person includes:

(1) Any person directly or indirectly through one or more intermediaries, controlling, controlled by, or under common control with the person;

(2) Any officer, director, employee, relative, or partner in any such person; and

(3) Any corporation or partnership of which such person is an officer, director, partner, or employee.

(c) The term ''control'' means the power to exercise a controlling influence over the management or policies of a person other than an individual.

(d) The term ''Fund,'' ''Funds'' or ''Affiliated Funds'' means any open-end management investment company or companies registered under the Investment Company Act for which First Security serves as investment adviser and/or provides any Secondary Service as approved by such Funds. As noted in the Preamble, the Funds are also referred to as the ''Affiliated Funds'' to distinguish them from certain third party funds for which First Security and its affiliates provide subadministrative services and which are not involved in conversion transactions that are described herein.

(e) The term ''net asset value'' means the amount for purposes of pricing all purchases and sales calculated by dividing the value of all securities, determined by a method as set forth in a Fund's prospectus and statement of additional information, and other assets belonging to each of the portfolios in such Fund, less the liabilities charged to each portfolio, by the number of outstanding shares.

(f) The term ''relative'' means a ''relative'' as that term is defined in section 3(15) of the Act (or a ''member of the family'' as that term is defined in section 4975(e)(6) of the Code), or a brother, a sister, or a spouse of a brother or a sister.

(g) The term ''Second Fiduciary'' means a fiduciary of a plan who is independent of and unrelated to First Security. For purposes of this exemption, the Second Fiduciary will not be deemed to be independent of and unrelated to First Security if:

(1) Such Second Fiduciary directly or indirectly controls, is controlled by, or is under common control with First Security;

(2) Such Second Fiduciary, or any officer, director, partner, employee, or relative of such Second Fiduciary is an officer, director, partner, or employee of First Security (or is a relative of such persons); or

(3) Such Second Fiduciary directly or indirectly receives any compensation or other consideration for his or her own personal account in connection with the transactions described in this proposed exemption.

If an officer, director, partner, or employee of First Security (or a relative of such persons), is a director of such Second Fiduciary, and if he or she abstains from participation in (A) the choice of the Plan's investment manager/adviser or (B) the approval of any purchase or sale by the Plan of shares of the Funds, in connection with the transactions described in Section I, then paragraph (g)(2) of this Section II, shall not apply.

(h) The term ''Secondary Service'' means a service, other than an investment management, investment advisory, or similar service, which is provided by First Security to the Funds, including but not limited to custodial, accounting, brokerage, administrative, or any other service.

EFFECTIVE DATE: This exemption is effective as of December 28, 1994.

For a more complete statement of the facts and representations supporting this exemption, refer to the notice of proposed exemption published on April 22, 1999 at 64 FR 19808.

FOR FURTHER INFORMATION CONTACT: Ms. Jan D. Broady of the Department, telephone (202) 219–8881. (This is not a toll-free number.)

San Diego Electrical Pension Trust (the Pension Plan); and San Diego Joint Apprenticeship and Training Trust (the Training Plan; collectively, the Plans), Located in San Diego, California

[Prohibited Transaction Exemption 99–24; Exemption Application Nos. D–10581 and L–10582]

Exemption

The restrictions of section 406(b)(2) of the Act shall not apply to the proposed purchase by the Training Plan from the Pension Plan of a minority interest (the Minority Interest) in certain improved real property jointly owned by the Plans, provided that the following conditions are satisfied:

(1) The purchase is a one-time transaction for cash;

(2) The terms and conditions of the transaction are not less favorable to either Plan than those each could obtain in a comparable arm's length transaction with an unrelated party;

(3) The Training Plan pays no more, and the Pension Plan receives no less, than the fair market value of the Minority Interest, as of the date of the transaction, as determined by a qualified, independent appraiser;

(4) Neither the Pension Plan nor the Training Plan pays any commissions or fees in connection with the transaction;

(5) The trustees of the Plans (other than their common trustees), the Pension Plan's investment manager, and

a qualified, independent fiduciary that has been retained to represent the Training Plan, have reviewed the terms and conditions of the transaction and determined that such terms and conditions are in the best interests of, and appropriate for, their respective Plans; and

(6) The independent fiduciary for the Training Plan monitors the proposed transaction and takes whatever actions necessary to safeguard the interests of the Training Plan.

For a more complete statement of the facts and representations supporting the Department's decision to grant this exemption, refer to the notice of proposed exemption published on April 22, 1999 at 64 FR 19813.

Written Comments

The Department received no written comments or requests for a public hearing with respect to the notice of proposed exemption (the Notice). However, in a letter dated April 19, 1999, the Department was informed that Washington Capital Management (WCM), an investment management firm located in San Diego, California, has purchased the business of AMRESCO Advisors, Inc. (AMRESCO) and succceeded to all of AMRESCO's rights and obligations under its client contracts. Like AMRESCO, WCM is a registered investment adviser and ''qualified professional asset manager'', as defined in Prohibited Transaction Class Exemption 84–14 (49 FR 9494, March 13, 1984). Therefore, all duties and responsibilities of AMRESCO as the independent fiduciary for the Training Plan, which are described in the Summary of Facts and Representations in the Notice, shall now apply to WCM.

Accordingly, based upon the information contained in the entire record, the Department has determined to grant the proposed exemption.

FOR FURTHER INFORMATION CONTACT: Ms. Karin Weng of the Department, telephone (202) 219–8881. (This is not a toll-free number.)

Daniel N. Cunningham IRA (the Cunningham IRA); Sidney B. Cox IRA (the Cox IRA) (collectively, the IRAs), Located in Fresno, California

[Prohibited Transaction Exemption 99–25; Exemption Application Numbers: D–10723 and D–10724]

Exemption

The sanctions resulting from the application of section 4975 of the Code, by reason of section 4975(c)(1)(A) through (E) of the Code, shall not apply to the purchase (the Purchase) by each IRA [1] of certain shares of Clovis Community Bank common stock (the Stock) from Mr. Daniel N. Cunningham and Mr. Sidney B. Cox (the Account Holders), disqualified persons with respect to the IRAs, provided that the following conditions are met:

(a) The Purchase of the Stock by each IRA is a one-time transaction for cash;

(b) Each IRA purchases the Stock for a price not exceeding the fair market value of the Stock at the time of each Purchase;

(c) The terms and conditions of each Purchase are at least as favorable as those available in an arm's length transaction with an unrelated third party;

(d) Each IRA does not pay any commissions or other expenses in connection with each Purchase;

(e) The IRA assets invested in the Stock do not exceed 25% of the total assets of each IRA at the time of the transaction; and

(f) Each IRA, at all times, will hold less than one percent (1%) of the outstanding shares of the Stock.

For a more complete statement of the facts and representations supporting the Department's decision to grant this exemption, please refer to the proposed exemption published on Thursday, May 13, 1999 at 64 FR 25924 (the Prior Notice).

Correction: The Prior Notice was published with an effective date. Because the applicants represent that each Purchase will take place only after the grant of this exemption, the effective date has been removed.

FOR FURTHER INFORMATION CONTACT: Mr. James Scott Frazier, telephone (202) 219–8881. (This is not a toll-free number).

General Information

The attention of interested persons is directed to the following:

(1) The fact that a transaction is the subject of an exemption under section 408(a) of the Act and/or section 4975(c)(2) of the Code does not relieve a fiduciary or other party in interest or disqualified person from certain other provisions to which the exemptions does not apply and the general fiduciary responsibility provisions of section 404 of the Act, which among other things require a fiduciary to discharge his duties respecting the plan solely in the interest of the participants and beneficiaries of the plan and in a prudent fashion in accordance with section 404(a)(1)(B) of the Act; nor does it affect the requirement of section 401(a) of the Code that the plan must operate for the exclusive benefit of the employees of the employer maintaining the plan and their beneficiaries;

(2) These exemptions are supplemental to and not in derogation of, any other provisions of the Act and/or the Code, including statutory or administrative exemptions and transactional rules. Furthermore, the fact that a transaction is subject to an administrative or statutory exemption is not dispositive of whether the transaction is in fact a prohibited transaction; and

(3) The availability of these exemptions is subject to the express condition that the material facts and representations contained in each application are true and complete and accurately describe all material terms of the transaction which is the subject of the exemption. In the case of continuing exemption transactions, if any of the material facts or representations described in the application change after the exemption is granted, the exemption will cease to apply as of the date of such change. In the event of any such change, application for a new exemption may be made to the Department.

Signed at Washington, D.C., this 22nd day of June, 1999.

Ivan Strasfeld,

Director of Exemption Determinations, Pension and Welfare Benefits Administration, Department of Labor.

[FR Doc. 99–16214 Filed 6–24–99; 8:45 pm]

BILLING CODE 4510–29–P

[1] Because each IRA has only one participant, there is no jurisdiction under 29 CFR 2510.3–3(b). However, there is jurisdiction under Title II of the Act pursuant to section 4975 of the Code.

DEPARTMENT OF LABOR

Pension and Welfare Benefits Administration

Working Group Studying Issues Surrounding the Trend in the Defined Benefit Plan Market With a Focus on Employer-Sponsored Hybrid Plans Advisory Council on Employee Welfare and Pension benefits Plans; Notice of Meeting

Pursuant to the authority contained in Section 512 of the Employee retirement Income Security Act of 1974 (ERISA), 29 U.S.C. 1142, a public meeting will be held on Wednesday, July 14, 1999, of the Advisory Council on Employee Welfare and Pension Benefit Plans Working Group assigned to study issues surrounding trends in the defined benefit market with a focus on employer-sponsored hybrid plans.

The purpose of the open meeting, which will run from 9:30 a.m. to approximately 2:30 p.m., with a one-hour lunch break at noon, in Room S–4215 A–B, U.S. Department of Labor Building, Second and Constitution Avenue NW, Washington, DC 20210, is for working group members to continue taking testimony on cash balance and other hybrid plans.

Members of the public are encouraged to file a written statement pertaining to the topic by submitting 20 copies on or before July 7, 1999, to Sharon Morrissey, Executive Secretary, ERISA Advisory Council, U.S. Department of labor, Room N–5677, 200 Constitution Avenue, NW, Washington, D.C. 20210. Individuals or representatives of organizations wishing to address the Working Group should forward their request to the Executive Secretary or telephone (202) 219–8753. Oral presentations will be limited to 10 minutes, but an extended statement may be submitted for the record. Individuals with disabilities, who need special accommodations, should contact Sharon Morrissey by July 7, at the address indicated in this notice.

Organizations or individuals also may submit statements for the record without testifying. Twenty (20) copies of such statements should be sent to the Executive Secretary of the Advisory Council at the above address. Papers will be accepted and included in the record of the meeting if received on or before July 7.

Signed at Washington, D.C. this 20th day of June 1999.

Richard McGahey,

Assistance Secretary, Pension and Welfare Benefits Administration.

[FR Doc. 99–16199 Filed 6–24–99; 8:45 am]

BILLING CODE 4510–29–M

DEPARTMENT OF LABOR

Pension and Welfare Benefits Administration

Working Group Exploring the Possibility of Using Surplus Pension Assets To Secure Retiree Health Benefits Advisory Council on Employee Welfare and Pension Benefits Plans; Notice of Meeting

Pursuant to the authority contained in Section 512 of the Employee Retirement Income Security Act of 1974 (ERISA), 29 U.S.C. 1142, a public meeting will be held Tuesday, July 13, 1999, of the Advisory Council on Employee Welfare and Pension Benefit Plans Working Group assigned to explore the possibility of using surplus pension assets to secure retiree health benefits.

The session will take place in Room S–4215 A–B, U.S. Department of Labor Building, Second and Constitution Avenue, NW, Washington, D.C. 20210. the purpose of the open meeting, which will run from 1:00 p.m. to approximately 4:00 p.m., is for working group members to hear testimony on the accessibility of surplus pension plan assets currently and on policy considerations surrounding accessibility. The work group's intent is engage a diverse set of witnesses for testimonies.

Members of the public are encouraged to file a written statement pertaining to the topic by submitting 20 copies on or before July 7, 1999, to Sharon Morrissey, Executive Secretary, ERISA Advisory Council, U.S. Department of Labor, Room N–5677, 200 Constitution Avenue, NW, Washington, D.C. 20210. Individuals or representatives of organizations wishing to address the Working Group should forward their request to the Executive Secretary or telephone (202) 219–8753. Oral presentations will be limited to 10 minutes, but an extended statement may be submitted for the record. Individuals with disabilities, who need special accommodations, should contact Sharon Morrissey by July 7, at the address indicated in this notice.

Organizations or individuals may also submit statements for the record without testifying. Twenty (20) copies of such statements should be sent to the Executive Secretary of the Advisory Council at the above address. Papers will be accepted and included in the record of the meeting if received on or before July 7.

Signed at Washington, D.C. this 20 day of June 1999.

Richard McGahey,

Assistant Secretary, Pension and Welfare Benefits Administration.

[FR Doc. 99–16200 Filed 6–24–99; 8:45 am]

BILLING CODE 4510–29–M

DEPARTMENT OF LABOR

Pension and Welfare Benefits Administration

Working Group on the Benefit Implications Due to the Growth of a Contingent Workforce Advisory Council on Employee Welfare and Pension Benefits Plans; Notice of Meeting

Pursuant to the authority contained in Section 512 of the Employee Retirement Income Security Act of 1974 (ERISA), 29 U.S.C. 1142, the Working Group assigned by the Advisory Council on Employee Welfare and Pension Benefit Plans to study what the benefit implications are due to the growth of a contingent workforce will hold an open public meeting on Tuesday, July 13, 1999, in Room S–4215 A–B, U.S. Department of Labor Building, Second and Constitution Avenue, NW, Washington, D.C. 20210.

The purpose of the open meeting, which will run from 9:30 a.m. to approximately noon is for Working Group members to receive testimony from witnesses providing temporary staff employees to employers throughout the United States, including persons representing associations of such providers.

Members of the public are encouraged to file a written statement pertaining to the topic by submitting 20 copies on or before July 7, 1999, to Sharon Morrissey, Executive Secretary, ERISA Advisory Council, U.S. Department of Labor, Room N–5677, 200 Constitution Avenue, NW, Washington, D.C. 20210. Individuals or representatives of organizations wishing to address the Working Group should forward their request to the Executive Secretary or telephone (202) 219–8753. Oral presentations will be limited to 10 minutes, but an extended statement may be submitted for the record. Individuals with disabilities, who need special accommodations, should contact Sharon Morrissey by July 7, at the address indicated in this notice.

Organizations or individuals may also submit statements for the record without testifying. Twenty (20) copies of such statements should be sent to the Executive Secretary of the Advisory Council at the above address. Papers will be accepted and included in the record of the meeting if received on or before July 7.

Signed at Washington, D.C. this 20th day of June, 1999.

Richard McGahey,

Assistant Secretary, Pension and Welfare Benefits Administration.

[FR Doc. 99–16201 Filed 6–24–99; 8:45 am]

BILLING CODE 4510–29–M

NATIONAL ARCHIVES AND RECORDS ADMINISTRATION

Records Schedules; Availability and Request for Comments

AGENCY: National Archives and Records Administration, Office of Records Services—Washington, DC.

ACTION: Notice of availability of proposed records schedules; request for comments.

SUMMARY: The National Archives and Records Administration (NARA) publishes notice at least once monthly of certain Federal agency requests for records disposition authority (records schedules). Once approved by NARA, records schedules provide mandatory instructions on what happens to records when no longer needed for current Government business. They authorize the preservation of records of continuing value in the National Archives of the United States and the destruction, after a specified period, of records lacking administrative, legal, research, or other value. Notice is published for records schedules in which agencies propose to destroy records not previously authorized for disposal or reduce the retention period of records already authorized for disposal. NARA invites public comments on such records schedules, as required by 44 U.S.C. 3303a(a).

DATES: Requests for copies must be received in writing on or before August 9, 1999. Once the appraisal of the records is completed, NARA will send a copy of the schedule. NARA staff usually prepare appraisal memorandums that contain additional information concerning the records covered by a proposed schedule. These, too, may be requested and will be provided once the appraisal is completed. Requesters will be given 30 days to submit comments.

ADDRESSES: To request a copy of any records schedule identified in this notice, write to the Life Cycle Management Division (NWML), National Archives and Records Administration (NARA), 8601 Adelphi Road, College Park, MD 20740–6001. Requests also may be transmitted by FAX to 301–713–6852 or by e-mail to records.mgt@arch2.nara.gov. Requesters must cite the control number, which appears in parentheses after the name of the agency which submitted the schedule, and must provide a mailing address. Those who desire appraisal reports should so indicate in their request.

FOR FURTHER INFORMATION CONTACT: Marie Allen, Director, Life Cycle Management Division (NWML), National Archives and Records Administration, 8601 Adelphi Road, College Park, MD 20740–6001. Telephone: (301) 713–7110. E-mail: records.mgt@arch2.nara.gov.

SUPPLEMENTARY INFORMATION: Each year Federal agencies create billions of records on paper, film, magnetic tape, and other media. To control this accumulation, agency records managers prepare schedules proposing retention periods for records and submit these schedules for NARA's approval, using the Standard Form (SF) 115, Request for Records Disposition Authority. These schedules provide for the timely transfer into the National Archives of historically valuable records and authorize the disposal of all other records after the agency no longer needs to conduct its business. Some schedules are comprehensive and cover all the records of an agency or one of its major subdivisions. Most schedules, however, cover records of only one office or program or a few series of records. Many of these update previously approved schedules, and some include records proposed as permanent.

No Federal records are authorized for destruction without the approval of the Archivist of the United States. This approval is granted only after a thorough consideration of their administrative use by the agency of origin, the rights of the Government and of private persons directly affected by the Government's activities, and whether or not they have historical or other value.

Besides identifying the Federal agencies and any subdivisions requesting disposition authority, this public notice lists the organizational unit(s) accumulating the records or indicates agency-wide applicability in the case of schedules that cover records that may be accumulated throughout an agency. This notice provides the control number assigned to each schedule, the total number of schedule items, and the number of temporary items (the records proposed for destruction). It also includes a brief description of the temporary records. The records schedule itself contains a full description of the records at the file unit level as well as their disposition. If NARA staff has prepared an appraisal memorandum for the schedule, it too, includes information about the records. Further information about the disposition process is available on request.

Schedules Pending

1. Department of the Air Force, Headquarters, U.S. Air Force (N1-AFU–99–1, 2 items, 2 temporary items). Air Force litigation case files stored at the Washington National Records Center that did not establish major precedents or policy changes and/or did not attract widespread public or Congressional attention. Records document legal actions involving the Air Force, its personnel, or contractors, along with administrative proceedings, investigations, and legal processing. Files that relate to environmental matters are proposed for disposal 50 years after case is closed.

2. Department of Commerce, National Oceanic and Atmospheric Administration (N1–370–99–6, 3 items, 3 temporary items). Audit case files of internal agency programs, operations, and procedures, and external audits of agency contractors and grantees. Records consist of audit reports, correspondence, memorandums, comments, and supporting work papers. Also included are electronic copies of documents created using electronic mail and word processing.

3. Department of Justice, Office of Professional Responsibility (N1–60–99–6, 5 items, 4 temporary items). Files relating to investigations of alleged misconduct by attorneys and other employees of the Department of Justice. Included are original complaints or allegations, attorney's notes and evaluations, investigative reports, collected documents, and statements of case disposition. Also included are electronic copies of documents created using electronic mail and word processing. Recordkeeping copies of significant investigative case files are proposed for permanent retention.

4. Department of Labor, Bureau of Labor Statistics (N1–257–99–1, 2 items, 2 temporary items). Survey Of Occupational Injuries and Illness data collection booklets and related word processing and electronic mail copies. The data, which is collected by states, is tabulated by BLS and included in a Census of Fatal Occupational Injuries (CFOI) survey report, which was previously approved for permanent retention.

5. Department of Transportation, Federal Highway Administration (N1–406–99–1, 3 items, 2 temporary items). Records relating to highway construction and rehabilitation projects on Federal property. Included are such records as contracts, inspection reports, field notebooks, work orders, and project reports. Also included are electronic copies of documents created using electronic mail and word processing. Recordkeeping copies of final construction reports, project tracings, and reconnaissance reports are proposed for permanent retention.

6. Department of the Treasury, Internal Revenue Service (N1–58–99–3, 26 items, 18 temporary items). Copies of Service-wide directives other than recordkeeping copies. Included are electronic copies created using office automation, paper copies that have been

microfilmed, CD-ROM copies, and reference copies. Recordkeeping copies are proposed for permanent retention.

7. Corporation for National Service, Office of the Inspector General (N1–362–99–1, 5 items, 5 temporary items). Investigative case files and audit case files relating to agency personnel, volunteers, contractors, programs, procedures and operations. Included are complaints, allegations, investigations, audit reports, correspondence, memorandums, work papers, and electronic copies of documents created using electronic mail and word processing. Recordkeeping copies of significant investigative case files were scheduled for permanent retention in a previously approved schedule.

8. Nuclear Regulatory Commission, Office of International Programs (N1–431–99–3, 57 items, 41 temporary items). Electronic records in the Commission's Agencywide Document Access and Management System (ADAMS) pertaining to international programs, including electronic copies of records created using office automation tools and records that are used to create ADAMS portable document format files. Records, which were previously authorized for disposal in paper form, include files relating to committees and conferences for which the Commission is not the sponsor, copies of Department of State cables, foreign visitor files, routine correspondence files, and representation fund files. Proposed for permanent retention are electronic recordkeeping copies of files pertaining to committees and conferences sponsored by the Commission, records relating to the export/import of nuclear materials, international agreements, formal arrangements, program correspondence files at the office director level, international organization files, and regulatory history files.

9. Nuclear Regulatory Commission, Office of State Programs, (N1–431–99–4, 24 items, 18 temporary items). Electronic records in the Commission's Agencywide Document Access and Management System (ADAMS) pertaining to state programs, including electronic copies of records created using office automation tools and records that are used to create ADAMS portable document format files. Records, which were previously authorized for disposal in paper form, include such files as low-level and routine program correspondence, training files, and files pertaining to states with which the Commission has not made agreements. The electronic recordkeeping copies of the state agreement files, integrated materials performance evaluation program records, and general program correspondence files are proposed for permanent retention.

10. Nuclear Regulatory Commission, Office of Public Affairs (N1–431–99–6, 14 items, 10 temporary items). Electronic records in the Commission's Agencywide Document Access and Management System (ADAMS) pertaining to public affairs, including electronic copies of records created using office automation tools and records that are used to create ADAMS portable document format files. Records consist of low-level and routine program correspondence files which were previously authorized for disposal in paper form. The electronic recordkeeping copies of general program correspondence files at the Office Director level, press releases, official speeches, and other informational releases and publications are proposed for permanent retention.

11. U.S. Office of Government Ethics, Financial Disclosure Division (N1–522–99–2, 30 items, 30 temporary items). Records of the Financial Disclosure Division relating primarily to the filing of disclosure reports. Included are such records as reading files, requests for filing extensions and exemptions, late filing fee waivers, delinquent filer correspondence, delinquent agency submissions, notifications of conflict of interest, ethics agreement correspondence, monthly ethics agreement status reports, announcements of presidential nominations, logs documenting review of disclosure reports, and requests to inspect copies of completed financial disclosure reports. Also included are electronic copies of documents created using electronic mail and word processing.

Dated: June 17, 1999.

Michael J. Kurtz,

Assistant Archivist for Record Services—Washington, DC.

[FR Doc. 99–16176 Filed 6–24–99; 8:45 am]

BILLING CODE 7515–01–P

OFFICE OF MANAGEMENT AND BUDGET

Cumulative Report on Rescissions and Deferrals

June 1, 1999.

This report is submitted in fulfillment of the requirement of Section 1014(e) of the Congressional Budget and Impoundment Control Act of 1974 (Pub. L. 93–344). Section 1014(e) requires a monthly report listing all budget authority for the current fiscal year for which, as of the first day of the month, a special message had been transmitted to Congress.

This report gives the status, as of June 1, 1999, of three rescission proposals and three deferrals contained in two special messages for FY 1999. These messages were transmitted to Congress on October 22, 1998, and February 1, 1999.

Rescissions (Attachments A and C)

As of June 1, 1999, three rescission proposals totaling $35 million have been transmitted to the Congress. Attachment C shows the status of the FY 1999 rescission proposals.

Deferrals (Attachments B and D)

As of June 1, 1999, $658 million in budget authority was being deferred from obligation. Attachment D shows the status of each deferral reported during FY 1999.

Information from Special Messages

The special messages containing information on the rescission proposals and deferrals that are covered by this cumulative report are printed in the editions of the **Federal Register** cited below:

63 FR 63949, Tuesday, November 17, 1998

64 FR 6721, Wednesday, February 10, 1999

Jacob J. Lew,

Director.

Attachment A

Status of FY 1999 Rescissions (in Millions of Dollars)

	Budgetary resources
Rescissions proposed by the President	35.0
Rejected by the Congress	.....
Amounts rescinded by P.L. 106–31, the FY 1999 Emergency Supplemental Appropriations and Rescissions Act	−16.8
Currently before the Congress	18.2

Attachment B

Status of FY 1999 Deferrals (in Millions of Dollars)

	Budgetary resources
Deferrals proposed by the President	1,680.7
Routine Executive releases through April 1999 (OMB/Agency releases of $1,023.6 million, partially offset by a cumulative positive adjustment of $0.9 million)	−1,022.7
Overturned by the Congress	.....
Currently before the Congress	658.0

BILLING CODE 3110–01–P

ATTACHMENT C
Status of FY 1999 Rescission Proposals - As of June 1, 1999
(Amounts in thousands of dollars)

Agency/Bureau/Account	Rescission Number	Amounts Pending Before Congress: Less than 45 days	Amounts Pending Before Congress: More than 45 days	Date of Message	Previously Withheld and Made Available	Date Made Available	Amount Rescinded	Congressional Action
DEPARTMENT OF THE INTERIOR								
Bureau of Land Management								
Management of Lands and Resources	R99-1		6,800	2-1-99	*		6,800	P.L. 106-31
EXECUTIVE OFFICE OF THE PRESIDENT								
Unanticipated Needs								
Unanticipated Needs for Natural Disasters	R99-2		10,000	2-1-99	*		10,000	P.L. 106-31
INTERNATIONAL ASSISTANCE PROGRAMS								
International Security Assistance								
Foreign Military Financing Loan Program Account	R99-3		18,240	2-1-99	*			
TOTAL, RESCISSIONS			**35,040**				**16,800**	

* No funds were withheld.

ATTACHMENT D
Status of FY 1999 Deferrals - As of June 1, 1999
(Amounts in thousands of dollars)

Agency/Bureau/Account	Deferral Number	Amounts Transmitted: Original Request	Amounts Transmitted: Subsequent Change (+)	Date of Message	Releases(-): Cumulative OMB/ Agency	Releases(-): Congressionally Required	Congressional Action	Cumulative Adjustments	Amount Deferred as of 6-1-99
DEPARTMENT OF STATE									
Other									
United States Emergency Refugee and Migration Assistance Fund	D99-1	82,858		10-22-98					
			17,724	2-1-99	92,724				7,858
INTERNATIONAL ASSISTANCE PROGRAMS									
International Security Assistance									
Economic Support Fund	D99-2	84,777		10-22-98					
			1,310,376	2-1-99	760,963			881	635,072
Agency for International Development									
International Disaster Assistance	D99-3	185,000		2-1-99	169,900				15,100
TOTAL, DEFERRALS		**352,635**	**1,328,100**		**1,023,587**			**881**	**658,029**

06/09/99

[FR Doc. 99–16187 Filed 6–24–99; 8:45 am]
BILLING CODE 3110–01–C

OFFICE OF PERSONNEL MANAGEMENT

Submission for OMB Review; Comment Request for Review of a Revised Information Collection: RI 92–22

AGENCY: Office of Personnel Management.

ACTION: Notice.

SUMMARY: In accordance with the Paperwork Reduction Act of 1995 (Pub. L. 104–13, May 22, 1995), this notice announces that the Office of Personnel Management (OPM) intends to submit to the Office of Management and Budget a request for review of a revised information collection. RI 92–22, Annunity Supplement Earnings Report, is used annually to obtain the amount of personal earnings from annuity supplement recipients to determine if there should be a reduction in benefits paid to the annuitant.

Comments are particularly invited on: Whether this information is necessary for the proper performance of functions of the Office of Personnel Management, and whether it will have practical utility; whether our estimate of the public burden of this collection of information is accurate, and based on valid assumptions and methodology; and ways in which we can minimize the burden of the collection of information on those who are to respond, through the use of appropriate technological collection techniques or other forms of information technology.

Approximately 2,500 RI 92–22 forms are completed annually. Each form requires approximately 15 minutes to complete. The annual estimated burden is 625 hours.

For copies of this proposal, contact Mary Beth Smith-Toomey on (202) 606–8358, or E-mail to mbtoomey@opm.gov.

DATES: Comments on this proposal should be received on or before August 24, 1999.

ADDRESSES: Send or deliver comments to Ronald W. Melton, Chief, Operations Support Division, Retirement and Insurance Service, U.S. Office of Personnel Management, 1900 E Street, NW, Room 3349, Washington, DC 20415.

FOR INFORMATION REGARDING ADMINISTRATIVE COORDINATION—CONTACT: Patricia M. Worsham, Management Analyst, Budget & Administrative Services Division, (202) 606–0623, U.S. Office of Personnel Management.

Janice R. Lachance,

Director.

[FR Doc. 99–16150 Filed 6–24–99; 8:45 am]

BILLING CODE 6325–01–P

OFFICE OF PERSONNEL MANAGEMENT

Submission for OMB Review; Comment Request for Review of Data Collection Forms

AGENCY: Office of Personnel Management.

ACTION: Notice.

SUMMARY: Under the Paperwork Reduction Act of 1995 (Pub. L. 104–13, May 22, 1995), this notice announces that the Office of Personnel Management (OPM) has submitted to the Office of Management and Budget a request for clearance of an information collection. The Establishment Information Form, the Wage Data Collection Form, and the Wage Data Collection Continuation Form are wage survey forms developed by OPM for use by the Department of Defense to establish prevailing wage rates for Federal Wage System employees.

The Department of Defense contacts approximately 21,200 businesses annually to determine the level of wages paid by private enterprise establishments for representative jobs common to both private industry and the Federal Government. Each survey collection requires 1–4 hours of respondent burden, resulting in a total yearly burden of approximately 75,800 hours.

For copies of this proposal, contact Mary Beth Smith-Toomey on (202) 606–8358, or send an email message to mbtoomey@opm.gov.

DATES: Comments on this proposal must be received on or before July 26, 1999.

ADDRESSES: Send or deliver written comments to:

Donald J. Winstead, Assistant Director for Compensation Administration, Workforce Compensation and Performance Service, U.S. Office of Personnel Management, 1900 E Street NW., Room 7H31, Washington, DC 20415

and

Joseph Lackey, OPM Desk Officer, Office of Information and Regulatory Affairs, Office of Management and Budget, New Executive Office Building, NW., Room 10235, Washington, DC 20503.

FOR INFORMATION REGARDING ADMINISTRATIVE COORDINATION—CONTACT: Mark A. Allen, Salary and Wage Systems Division, Office of Compensation Administration, (202) 606–2848.

Office of Personnel Management.

Janice R. Lachance,

Director.

[FR Doc. 99–16151 Filed 6–24–99; 8:45 am]

BILLING CODE 6325–01–P

OFFICE OF PERSONNEL MANAGEMENT

Submission for OMB Review; Comment Request for Review of a Revised Information Collection: RI 34–1 and RI 34–3

AGENCY: Office of Personnel Management.

ACTION: Notice.

SUMMARY: In accordance with the Paperwork Reduction Act of 1995 (Pub. L. 104–13, May 22, 1995), this notice announces that the Office of Personnel Management (OPM) has submitted to the Office of Management and Budget a request for review of a revised information collection. RI 34–1, Financial Resources Questionnaire, collects detailed financial information for use by OPM in determining whether to agree to a waiver, compromise, or adjustment of the collection of erroneous payments from the Civil Service Retirement and Disability Fund. RI 34–3, Notice of Amount Due Because of Annuity Overpayment, informs the annuitant about the overpayment and collects information.

Approximately 520 RI 34–1 and 1,561 RI 34–3 forms will be completed per year. Each form requires approximately 1 hour to complete. The annual burden is 520 hours and 1,561 hours respectively.

For copies of this proposal, contact Mary Beth Smith-Toomey on (202) 606–8358, or E-mail to mbtoomey@opm.gov.

DATES: Comments on this proposal should be received on or before July 26, 1999.

ADDRESSES: Send or deliver comments to:

Ronald W. Melton, Chief, Operations Support Division, Retirement and Insurance Service, U.S. Office of Personnel Management, 1900 E Street, NW, Room 3349, Washington, DC 20415

and

Joseph Lackey, OPM Desk Officer, Office of Information and Regulatory Affairs, Office of Management and Budget, New Executive Office Building, NW, Room 10235, Washington, DC 20503

FOR FURTHER INFORMATION CONTACT: Phyllis R. Pinkney, Management Analyst, Budget & Administrative Services Division, (202) 606–0623.

Office of Personnel Management,

Janice R. Lachance,

Director.

[FR Doc. 99–16152 Filed 6–24–99; 8:45 am]

BILLING CODE 6325–01–P

OFFICE OF PERSONNEL MANAGEMENT

Submission for OMB Review: Comment Request; Review of a Revised Information Collection: Declaration for Federal Employment, Optional Form 306

AGENCY: Office of Personnel Management.

ACTION: Notice.

SUMMARY: In accordance with the Paperwork Reduction Act of 1995 (Pub. L. 104–13), this notice announces that the Office of Personnel Management has submitted to the Office of Management and Budget a request for clearance of a revised information collection.

To streamline the application process and reduce paperwork, we are planning to eliminate the Applicant's Statement of Selective Service Registration Form (64 FR 59) and add a question about Selective Service registration to the OF 306. We plan to add the following question about Selective Service Registration, which is currently on the Applicant's Statement of Selective Service Registration to the Optional Form 306: ''If you are a male born after December 31, 1959, and are at least 18 years of age, civil service employment law (5 U.S.C. 3328) requires that you must be registered with the Selective Service System, unless you meet certain exemptions. Have you registered with the Selective Service? Yes ____ No ____. If No, describe your reason(s) in item ____.''

The OF 306 is completed by applicants who are under serious consideration for employment. It is completed early enough in the employment process that if an agency encounters an applicant who did not register with the Selective Service, the agency would have sufficient time to determine if non-registration was knowing and willful prior to making a final employment decision.

DATES: Comments on this proposal should be received on or before August 24, 1999.

ADDRESSES: Send or deliver written comments to Richard A. Ferris, Associate Director for Investigations, Office of Personnel Management, Room 5416, 1900 E Street NW, Washington, DC 20415–4000.

FOR FURTHER INFORMATION CONTACT: Kristen Jenkinson-McDermott on (202) 606–2133, or FAX (202) 606–2390, or e-mail KJMCDERM@OPM.GOV.

SUPPLEMENATARY INFORMATION: OPM's current regulations, written in 1987, contain a self-certification statement of Selective Service registration to be completed by applicants and employees. Agencies reproduce this statement on a separate form. In 1987, the application for Federal Employment, Standard Form 171, did not contain a question about Selective Service registration. Therefore, a separate form was necessary to collect the information required by 5 U.S.C. 3328. Today, agencies use many different forms when considering employees for Federal jobs: The resume or the Optional Application for Federal Employment (OF 612), used to determine basic qualifications for positions, and a Declaration for Federal Employment (OF 306), used to determine an applicant's acceptability and suitability for Federal positions.

It is estimated that 474,000 individuals will respond annually for a total burden of 118,500 hours.

Comments are particularly invited on:

—Whether this collection of information is necessary for the proper performance of functions of the Office of Personnel Management.

—Whether our estimate of the public burden of this collection is accurate, and based on valid assumptions and methodology; and

—Ways in which we can minimize the burden of the collection of information on those who are to respond, through use of the appropriate technological collection techniques or other forms of information technology.

For copies of this proposal please contact Mary Beth Smith-Toomey at (202) 606–8358, or Fax (202) 418–3251, or by e-mail to mbtoomey@mail.opm.gov.

Janice R. Lachance,

Director.

[FR Doc. 99–16153 Filed 6–24–99; 8:45 am]

BILLING CODE 6325–01–P

SECURITIES AND EXCHANGE COMMISSION

Submission for OMB Review; Comment Request

Upon Written Request, Copies Available From: Securities and Exchange Commission Office of Filings and Information Services Washington, DC 20549

Extension:

Rule 15g–2 [17 CFR 240.15g–2], SEC File No. 270–381, OMB Control No. 3235–0434

Notice is hereby given that pursuant to the Paperwork Reduction Act of 1995 (44 U.S.C. 3501 et seq.) the Securities and Exchange Commission (''Commission'') has submitted to the Office of Management and Budget a request for extension of the previously approved collection of information discussed below.

The ''Penny Stock Disclosure Rules'' (Rule 15g–2, 17 CFR 240.15g–2) require broker-dealers to provide their customers with a risk disclosure document, as set forth in Schedule 15G, prior to their first non-exempt transaction in a ''penny stock.'' As amended, the rule requires broker-dealers to obtain written acknowledgement from the customer that he or she has received the required risk disclosure document. The amended rule also requires broker-dealers to maintain a copy of the customer's written acknowledgement for at least three years following the date on which the risk disclosure document was provided to the customer, the first two years in an accessible place.

The risk disclosure documents are for the benefit of the customers, to assure that they are aware of the risks of trading in ''penny stocks'' before they enter into a transaction. The risk disclosure documents are maintained by the broker-dealers and may be reviewed during the course of an examination by the Commission. The Commission estimates that there are approximately 270 broker-dealers subject to Rule 15g–2, and that each one of these firms will process an average of three new customers for ''penny stocks'' per week. Thus each respondent will process approximately 156 risk disclosure documents per year. The staff calculates that (a) the copying and mailing of the risk disclosure document should take no more than two minutes per customer, and (b) each customer should take no more than eight minutes to review, sign, and return the risk disclosure document. Thus, the total ongoing respondent burden is approximately 10 minutes per response, or an aggregate total of 1,560 minutes per respondent. Since there are 270 respondents, the annual burden is 421,200 minutes (1,560 minutes per each of the 270 respondents), or 7,020 hours. In addition, broker-dealers will incur a recordkeeping burden of approximately

two minutes per response. Thus each respondent will incur a recordkeeping burden of 312 (156×312/60). Accordingly, the aggregate annual hour burden associated with Rule 15g–2 is 8,424 hours (7,020+1,404).

The Commission does not maintain the risk disclosure document, however, it must be retained by the broker-dealer for at least three years following the date on which the risk disclosure document was provided to the customer, the first two years in an accessible place. The collection of information required by the rule is mandatory. The risk disclosure document is otherwise governed by the internal policies of the broker-dealer regarding confidentiality, etc.

An agency may not conduct or sponsor, and a person is not required to respond to, a collection of information unless it displays a currently valid control number.

Written comments regarding the above information should be directed to the following persons: (i) Desk Officer for the Securities and Exchange Commission, Office of Information and Regulatory Affairs, Office of Management and Budget, Room 10102, New Executive Office Building, Washington, D.C. 20503; and (ii) Michael E. Bartell, Associate Executive Director, Office of Information Technology, Securities and Exchange Commission, 450 Fifth Street, N.W., Washington, D.C. 20549. Comments must be submitted to OMB within 30 days of this notice.

Dated: June 21, 1999.

Margaret H. McFarland,

Deputy Secretary.

[FR Doc. 99–16202 Filed 6–24–99; 8:45 am]

BILLING CODE 8010–01–M

DEPARTMENT OF STATE

[Public Notice 3076]

Policy on Munitions Export Licenses to Nigeria

AGENCY: Bureau of Political-Military Affairs, Department of State.

ACTION: Public Notice.

SUMMARY: Pursuant to Sections 38 and 42 of the Arms Export Control Act, notice is hereby given that it is no longer the policy of the United States to deny all requests for licenses and other approvals to export defense articles or defense services to Nigeria. Therefore, U.S. persons registered with the Department of State's Office of Defense Trade Controls may henceforth submit requests that will be reviewed on a case-by-case basis.

EFFECTIVE DATE: May 30, 1999.

FOR FURTHER INFORMATION CONTACT: William J. Lowell, Director, Office of Defense Trade Controls, Bureau of Political-Military Affairs, Department of State (703) 875–6644 or FAX (703) 875–6647.

SUPPLEMENTARY INFORMATION: Effective immediately, it is no longer the policy of the U.S. Government to deny all requests for licenses and other approvals to authorize the export of defense articles and defense services to Nigeria. Since the death of General Sani Abacha in June 1998, Head of State Abubakar has made significant and steady contributions toward Nigeria's transition to a democratically elected government and to human rights reform, and a democratic election was held in February 1999. Nigeria has reversed many of the policies of the Abacha regime and inaugurated the democratically elected administration of Olusegun Obasanjo. It is because of these changes that U.S. persons registered with the Department of State's Office of Defense Trade Controls may henceforth submit requests that will be reviewed on a case-by-case basis. Reinstatement of Nigeria to the sales territory of any manufacturing license and/or technical assistance agreement should be addressed through an amendment to the agreement to be submitted to the Office of Defense Trade Controls.

This action has been taken pursuant to Sections 38 and 42 of the Arms Export Control Act (22 U.S.C. 2791) and Section 126.7 of the International Traffic in Arms Regulations in furtherance of the foreign policy of the United States.

Dated: June 18, 1999.

Eric D. Newsom,

Assistant Secretary, Bureau of Political-Military Affairs.

[FR Doc. 99–16254 Filed 6–24–99; 8:45 am]

BILLING CODE 4710–25–P

OFFICE OF THE UNITED STATES TRADE REPRESENTATIVE

COUNCIL ON ENVIRONMENTAL QUALITY

Request for Public Comment Regarding the Economic and Environmental Effects of Tariff Elimination in the Forest Products Sector

AGENCY: Office of the United States Trade Representative and Council on Environmental Quality.

ACTION: Request for written public comment.

SUMMARY: The Office of the United States Trade Representative (USTR) and the Council on Environmental Quality (CEQ) are seeking public comment about the economic and environmental effects of the initiative to eliminate remaining tariffs on forest products. These comments are sought in the context of a written analysis which CEQ and USTR are undertaking of that initiative. The initiative, which is now the subject on negotiations within the World Trade Organization (WTO), is part of an eight sector accelerated tariff liberalization (ATL) proposal. The other ATL sectors are environmental goods and services, gems and jewelry, medical equipment and scientific instruments, chemicals, energy, fish and toys.

The ATL proposal in forest products covers all of Chapters 44, 46, 47, 48, 49 on the HTS as well as portions of chapter 38 (certain wood chemicals), and 94 (furniture and prefabricated buildings.)

The complete list of tariff lines included in the initiative can be found in the **Federal Register** notice announcing ITC Investigation No. 332–392, Advice Concerning APEC Sectoral Trade Liberalization, (Federal Register, April 1, 1998, Vol. 63, No. 62).

The analysis will address the following broad subject areas: the history of the initiative, a description of how the forest products ATL relates to other U.S. government goals and objectives in the forest policy arena, the likely economic impact of tariff elimination in terms of shifts in production and consumption of forest products and the reasonably foreseeable environmental impacts of these shifts, and appropriate policy responses. The report is intended to focus on the effects of the ATL initiative on the United States but will also address broader global implications of the initiative. Specific information regarding, or empirical studies of, the economic and environmental impacts of past trade liberalization in this sector which interested parties may have would be particularly welcome.

Testimony related to the subject of this request which has been submitted in response to the following will be made a part of the record of this study and does not need to be resubmitted: ITC Investigation No. 332–392, ''Advice Concerning APEC Sectoral Trade Liberalization'' (**Federal Register,** April 1, 1998, Vol 63, No. 62); USTR Notice ''Negotiation of Sectoral Market Opening Agreements'' (**Federal Register,** May 15, 1998, Vol. 63, No. 94);

USTR Trade Policy Staff Committee Notice ''Request for Public Comment Regarding Negotiations on Market Access and Other Issues in the World Trade Organization and Under the Free Trade Area of the Americas'' (**Federal Register,** April 14, 1999, Vol. 64, No. 71); and ITC Investigation 332–400,''Conditions of Competition in U.S. Forest Products Trade''.

FOR FURTHER INFORMATION CONTACT: Office of the U.S. Trade Representative, Environment and Natural Resources Section, telephone 202–395–7320 or the Council on Environmental Quality, International Affairs, telephone 202–456–6224.

SUPPLEMENTARY INFORMATION:

1. Background

A. History of Tariff Liberalization in the Forest Products Sector

The United States sought elimination of all tariffs in the forest products sector during the Uruguay Round. The round resulted in a ''zero for zero'' (reciprocal tariff elimination) agreement which included the United States, Canada, Finland, Austria, Singapore, Hong Kong, Japan, EU, Korea and New Zealand for paper products (chapters 47, 48 and 49 of the HTS) by 2004. At the same time there was agreement to reduce, over five years, tariffs on wood products. In the United States, such reductions amounted to just over a one-third cut in average tariff levels from an average tariff level of 3.1% to an average tariff level of 1.8%. Under the Uruguay Round Agreements Act and its accompanying Statement of Administrative Action, Congress listed a number of industrial or agricultural sectors in which complete tariff elimination was not achieved in the Uruguay Round but for which Congress determined that obtaining further reductions and elimination of tariffs was a priority objective. Under section 11(b) of the Uruguay Round Agreements Act, Congress provided the Administration with ongoing authority to seek reductions in tariffs on wood products, among other sectors.

B. Initiative Begun in APEC

In mid 1997, APEC Ministers called for the nomination of sectors for Early Voluntary Sectoral Liberalization (EVSL) among APEC economies. Four nominations were received in the forest product area from the United States, Canada, Indonesia and New Zealand. These four proposals were merged together in September 1997, with New Zealand agreeing to act as coordinator for the proposal. Indonesia, the United States and Canada have remained active proponents of the proposal in a co-sponsor role. At the APEC summit in Kuala Lumpur in November 1998, APEC leaders agreed to move the tariff portions of the EVSL initiative to the WTO in order to seek a critical mass of support for concluding an agreement on all eight sectors by the end of 1999. The non-tariff, building standards and economic and technical cooperation areas of the proposal continue to be worked on within APEC.

C. Major global importers and exporters of forest products, 1996:

Importers	1000 US$	Exporters	1000 US$
USA	$22,558,540	Canada	$25,333,160
Japan	18,890,400	USA	16,939,900
Germany	11,926,820	Sweden	10,996,200
United Kingdom	8,476,689	Finland	10,301,020
Italy	6,148,593	Germany	9,438,751
France	5,356,351	Indonesia	5,206,522
Netherlands	4,489,773	France	4,193,914
Korea, Republic of	4,425,527	Malaysia	4,161,279
China (excl. Hong Kong)	3,858,254	Austria	4,149,678
Spain	3,552,249	Brazil	3,233,476
Belgium-Luxembourg	3,544,574	Russian Federation	2,995,568
Hong Kong, China	3,488,083	Italy	2,486,782
Taiwan	3,040,661	Netherlands	2,406,430
Canada	2,622,203	Belgium-Luxembourg	2,180,694
Switzerland	2,501,957	Norway	2,059,960
World	138,652,200	World	134,656,400

Source: FAO

D. Trade Barriers Faced by Sector

The sector faces a range of barriers. Tariffs remain particularly significant barriers. The 1998 FAO publication *Trade Restrictions and Their Impact on International Trade in Forest Products* which is available in hard copy and on the FAO website [www.fao.org/ur] provides a detailed explanation of the barriers faced in this sector.

Applied tariffs in OECD economies for these products, in general, are relatively low, however, tariffs for specific products remain high. This is especially true for wood panel products, builders' woodwork items, and furniture for those countries that did not agree to the zero for zero on furniture rates for particular products are higher, commonly 10–15%. Tariffs in other countries are higher than this, with rates commonly falling between 10 and 60%.

Tariffs, Selected Countries

HTS Product Chapters: 44, 47, 48, 49, 94 (part).

	Tariff % MFN average
Australia	2.88
Canada	3.88
Chile	11
China	20.86
Taiwan	3.22
Hong Kong, China	0
Indonesia	9.7
Japan	1.14
Korea	4.98
Malaysia	12.26
Mexico	11.32
New Zealand	6.06
Singapore	0
Thailand	20.04
USA	1.4
EU	5.26

Source: FAOSTAT Website

E. Scope

The ATL proposal covers all forest products—from rosin (ex 3804), to logs and wood products (ch44), ratan products (ex 46), pulp, paper and paper products (ch 47, 48 and 49), wooden furniture (ex 9401, ex 9403) and prefabricated buildings made of wood (ex 9406).

F. The Tariff Proposal Target

Existing parties to the Uruguay Round zero for zero agreement to accelerated removal of tariffs in chapters 47, 48 and 49 of the HTS (pulp, paper and paperboard and printed material) would agree to move up the elimination of tariffs in these sectors from 1 January 2004 to 1 January 2000. Others would attempt to remove tariffs by the same date but countries could delay tariff removal until 1 January 2002 on a case by case basis for a limited number of specific products.

The proposal calls for the commencement to tariff cuts on all other products with the goal of eliminating tariffs by 1 January 2002, but accepts that in special circumstances and on a case by case basis elimination could be delayed to 1 January 2004.

G. Non-Tariff Measures

As part of the original APEC EVSL agreed to in November 1997, APEC economies agreed to hire a consultant to undertake a study of non-tariff measures which may be affecting trade in the forest products sector. This past April, APEC issued a request for proposals for the study. The United States is the APEC coordinator for the study. Under the terms of reference, the study will include:

—A comprehensive inventory of non-tariff measures and other policies affecting trade in forest products;
—An identification of the most frequently used measures and policies;
—A qualitative and quantitative analysis of the impact of these measures/policies on trade, including a broader analysis of the policy goals underlying those measures/policies and the economic and environmental costs and benefits stemming from their application.

APEC members have been asked to notify and cross notify on NTMs in effect in their own economies and the economies of other APEC members. The study is to be completed by August 30, 1999, after which an APEC forest experts groups will formulate appropriate recommendations for the voluntary elimination of any unjustified measures identified in the report. APEC economies are then to submit individual, voluntary reports on timetables for the implementation of those recommendations.

H. Economic and Technical Cooperation

Four proposals have been received to date for projects under the environmental and technical cooperation (Ecotech) portion of the APEC EVSL. APEC economies have agreed that Ecotech cooperation projects in support of the forestry initiative should be focused on programs which further environmental goals, such as forest fire prevention, pest control, and adoption of sound phytosanitary standards. The four Ecotech projects under consideration are

—Projects to increase communities' forestry knowledge and their ability to develop solutions to such issues as forest resource assessment using criteria and indicators;
—Enhancement of local industry development in a sustainable manner through training programs on sustainable forest management;
—Cooperation to enhance collaborative work on forest fire prevention and management systems and development of fire monitoring and information systems; and
—Cooperation in such areas as (1) enhanced infrastructure, personnel and exchange of information on standards and technical regulations in the sector; (2) making information and training programs available on paper making, paper stock collection and utilization, recycling and waste reduction, panel production, furniture design, finishing and packaging, and builder's carpentry and joinery design; (3) enhancing transparency in customs procedures applied to the forestry sector through the Subcommittee on Customs Procedures of the APEC Committee on Trade and Investment; (4) promoting exchange of market information through cooperation among relevant organizations; and (5) improving information and monitoring systems associated with harmful pests.

2. Written Comments

Persons wishing to submit written comments in response to this notice should provide 20 copies no later than 30 days from the date of this notice to Gloria Blue, Executive Secretary, Trade Policy Staff Committee, ATTN: Forest Products ATL, Office of the U.S. Trade Representative, Room 122, 600 Seventeenth Street, NW, Washington, DC 20508. Any business confidential submissions must be clearly marked as such on cover page and succeeding page. Such submission must be accompanied by a non-confidential summary thereof.

Non-confidential submissions will be available for public inspection at the USTR Reading Room, Room 101, Office of the U.S. Trade Representative, 600 Seventeenth Street, NW, Washington, DC. An appointment to review the file may be made by calling Brenda Webb at (202) 395–6186. The Reading Room is open to the public from 10 a.m. to 12 noon and from 1 p.m. to 4 p.m., Monday through Friday.

Frederick L. Montgomery,

Chairman, Trade Policy Staff Committee.

Dinah Bear,

General Counsel, Council on Environmental Quality.

[FR Doc. 99–16242 Filed 6–24–99; 8:45 am]

BILLING CODE 3190–01–M

DEPARTMENT OF TRANSPORTATION

National Highway Traffic Safety Administration

[Docket No. NHTSA–99–5863]

Decision That Certain Nonconforming Motor Vehicles are Eligible for Importation

AGENCY: National Highway Traffic Safety Administration (NHTSA), DOT.

ACTION: Notice of decision by NHTSA that certain nonconforming motor vehicles are eligible for importation.

SUMMARY: This document announces decisions by NHTSA that certain motor vehicles not originally manufactured to comply with all applicable Federal motor vehicle safety standards are eligible for importation into the United States because they are substantially similar to vehicles originally manufactured for importation into and/or sale in the United States and certified by their manufacturers as complying with the safety standards, and they are capable of being readily altered to conform to the standards.

DATES: These decisions are effective as of June 25, 1999.

FOR FURTHER INFORMATION CONTACT: George Entwistle, Office of Vehicle Safety Compliance, NHTSA (202–366–5306).

SUPPLEMENTARY INFORMATION:

Background

Under 49 U.S.C. § 30141(a)(1)(A), a motor vehicle that was not originally manufactured to conform to all applicable Federal motor vehicle safety standards shall be refused admission into the United States unless NHTSA has decided that the motor vehicle is substantially similar to a motor vehicle originally manufactured for importation into and sale in the United States, certified under 49 U.S.C. § 30115, and of the same model year as the model of the motor vehicle to be compared, and is capable of being readily altered to

conform to all applicable Federal motor vehicle safety standards.

Petitions for eligibility decisions may be submitted by either manufacturers or importers who have registered with NHTSA pursuant to 49 CFR part 592. As specified in 49 CFR 593.7, NHTSA publishes notice in the **Federal Register** of each petition that it receives, and affords interested persons an opportunity to comment on the petition. At the close of the comment period, NHTSA decides, on the basis of the petition and any comments that it has received, whether the vehicle is eligible for importation. The agency then publishes this decision in the **Federal Register**.

NHTSA received petitions from registered importers to decide whether the vehicles listed in Annex A to this notice are eligible for importation into the United States. To afford an opportunity for public comment, NHTSA published notice of these petitions as specified in Annex A. The reader is referred to those notices for a thorough description of the petitions. No comments were received in response to these notices. Based on its review of the information submitted by the petitioners, NHTSA has decided to grant the petitions.

Vehicle Eligibility Number for Subject Vehicles

The importer of a vehicle admissible under any final decision must indicate on the form HS–7 accompanying entry the appropriate vehicle eligibility number indicating that the vehicle is eligible for entry. Vehicle eligibility numbers assigned to vehicles admissible under this decision are specified in Annex A.

Final Decision

Accordingly, on the basis of the foregoing, NHTSA hereby decides that each motor vehicle listed in Annex A to this notice, which was not originally manufactured to comply with all applicable Federal motor vehicle safety standards, is substantially similar to a motor vehicle manufactured for importation into and/or sale in the United States, and certified under 49 U.S.C. § 30115, as specified in Annex A, and is capable of being readily altered to conform to all applicable Federal motor vehicle safety standards.

Authority: 49 U.S.C. 30141(a)(1)(A) and (b)(1); 49 CFR 593.8; delegations of authority at 49 CFR 1.50 and 501.8.

Issued on: June 22, 1999.

Marilynne Jacobs,

Director, Office of Vehicle Safety Compliance.

Annex A—Nonconforming Motor Vehicles Decided To Be Eligible for Importation

1. Docket No. NHTSA–98–4547
   Nonconforming Vehicle: 1996 Chrysler LHS manufactured for sale in Mexico
   Substantially similar U.S.-certified vehicle: 1996 Chrysler LHS
   Notice of Petition published at: 63 FR 56063 (October 20, 1998)
   Vehicle Eligibility Number: VSP–276
2. Docket No. NHTSA–98–4575
   Nonconforming Vehicles: 1995–1998 Mercedes-Benz E200
   Substantially similar U.S.-certified vehicles: 1995–1998 Mercedes-Benz E220
   Notice of Petition published at: 63 FR 58091 (October 29, 1998)
   Vehicle Eligibility Number: VSP–278
3. Docket No. NHTSA–98–4576
   Nonconforming Vehicles: 1998 Mercedes-Benz CL500
   Substantially similar U.S.-certified vehicles: 1998 Mercedes-Benz CL500
   Notice of Petition published at: 63 FR 58092 (October 29, 1998)
   Vehicle Eligibility Number: VSP–277
4. Docket No. NHTSA–98–4578
   Nonconforming Vehicles: 1987–1995 Mazda RX–7
   Substantially similar U.S.-certified vehicles: 1994–1997 Mazda RX–7
   Notice of Petition published at: 63 FR 58090 (October 29, 1998)
   Vehicle Eligibility Number: VSP–279
5. Docket No. NHTSA–98–4800
   Nonconforming Vehicles: 1984–1992 BMW K100 Motorcycles
   Substantially similar U.S.-certified vehicles: 1984–1992 BMW K100 Motorcycles
   Notice of Petition published at: 63 FR 67984 (December 9, 1998)
   Vehicle Eligibility Number: VSP–285
6. Docket No. NHTSA–98–4801
   Nonconforming Vehicles: 1990–1991 BMW 320I
   Substantially similar U.S.-certified vehicles: 1990–1991 BMW 320I
   Notice of Petition published at: 63 FR 67982 (December 9, 1998)
   Vehicle Eligibility Number: VSP–283
7. Docket No. NHTSA–98–4802
   Nonconforming Vehicle: 1995 Mercedes-Benz SL320
   Substantially similar U.S.-certified vehicle: 1995 Mercedes-Benz SL320
   Notice of Petition published at: 63 FR 67983 (December 9, 1998)
   Vehicle Eligibility Number: VSP–282
8. Docket No. NHTSA–98–4803
   Nonconforming Vehicles: 1988–1989 Volkswagen Transporter
   Substantially similar U.S.-certified vehicles: 1988–1989 Volkswagen Vanagon
   Notice of Petition published at: 63 FR 67981 (December 9, 1998)
   Vehicle Eligibility Number: VSP–284
9. Docket No. NHTSA–98–4804
   Nonconforming Vehicles: 1991 Honda Accord
   Substantially similar U.S.-certified vehicles: 1991 Honda Accord
   Notice of Petition published at: 63 FR 66231 (December 1, 1998)
   Vehicle Eligibility Number: VSP–280
10. Docket No. NHTSA–98–4805
   Nonconforming Vehicles: 1999 Harley Davidson FX, FL, and XL Motorcycles
   Substantially similar U.S.-certified vehicles: 1999 Harley Davidson FX, FL, and XL Motorcycles
   Notice of Petition published at: 63 FR 66230 (December 1, 1998)
   Vehicle Eligibility Number: VSP–281
11. Docket No. NHTSA–98–4863
   Nonconforming Vehicles: 1995–1998 Volvo 850 Turbo
   Substantially similar U.S.-certified vehicles: 1995–1998 Volvo 850 Turbo
   Notice of Petition published at: 63 FR 68502 (December 11, 1998)
   Vehicle Eligibility Number: VSP–286
12. Docket No. NHTSA–99–5068
   Nonconforming Vehicles: 1996–1998 Suzuki GSF 750 Motorcycles
   Substantially similar U.S.-certified vehicles: 1996–1998 Suzuki GSF 600 Motorcycles
   Notice of Petition published at: 64 FR 7684 (February 16, 1999)
   Vehicle Eligibility Number: VSP–287
13. Docket No. NHTSA–99–5068–1
   Nonconforming Vehicles: 1994–1998 Honda VF750 Motorcycles
   Substantially similar U.S.-certified vehicles: 1994–1998 Honda VF750 Motorcycles
   Notice of Petition published at: 64 FR 7684 (February 16, 1999)
   Vehicle Eligibility Number: VSP–290
14. Docket No. NHTSA–99–5069
   Nonconforming Vehicles: 1994–1998 Mercedes-Benz C190
   Substantially similar U.S.-certified vehicles: 1994–1998 Mercedes-Benz C220
   Notice of Petition published at: 64 FR 7685 (February 16, 1999)
   Vehicle Eligibility Number: VSP–289
15. Docket No. NHTSA–99–5070
   Nonconforming Vehicles: 1985–1998 Kawasaki ZX600 Motorcycles
   Substantially similar U.S.-certified vehicles: 1985–1998 Kawasaki ZX600 Motorcycles
   Notice of Petition published at: 64 FR 7687 (February 16, 1999)
   Vehicle Eligibility Number: VSP–288
16. Docket No. NHTSA–99–5197
   Nonconforming Vehicles: 1993–1996 Lexus GS300
   Substantially similar U.S.-certified vehicles: 1993–1996 Lexus GS300
   Notice of Petition published at: 64 FR 13247 (March 17, 1999)
   Vehicle Eligibility Number: VSP–293
17. Docket No. NHTSA–99–5208
   Nonconforming Vehicles: 1997–1999 Ferrari Maranello 550
   Substantially similar U.S.-certified vehicles: 1997–1999 Ferrari Maranello 550
   Notice of Petition published at: 64 FR 13248 (March 17, 1999)
   Vehicle Eligibility Number: VSP–292
18. Docket No. NHTSA–99–5209

Nonconforming Vehicles: 1992–1993 Bentley Turbo R
Substantially similar U.S.-certified vehicles: 1992–1993 Bentley Turbo R
Notice of Petition published at: 64 FR 13245 (March 17, 1999)
Vehicle Eligibility Number: VSP–291

[FR Doc. 99–16184 Filed 6–24–99; 8:45 am]

BILLING CODE 4910–59–P

DEPARTMENT OF TRANSPORTATION

National Highway Traffic Safety Administration

[Docket No. NHTSA–99–5864]

Decision That Certain Nonconforming Motor Vehicles Are Eligible for Importation

AGENCY: National Highway Traffic Safety Administration (NHTSA), DOT.

ACTION: Notice of decision by NHTSA that certain nonconforming motor vehicles are eligible for importation.

SUMMARY: This document announces decisions by NHTSA that certain motor vehicles not originally manufactured to comply with all applicable Federal motor vehicle safety standards are eligible for importation into the United States because they are substantially similar to vehicles originally manufactured for importation into and/or sale in the United States and certified by their manufacturers as complying with the safety standards, and they are capable of being readily altered to conform to the standards.

DATES: These decisions are effective as of June 25, 1999.

FOR FURTHER INFORMATION CONTACT: George Entwistle, Office of Vehicle Safety Compliance, NHTSA (202–366–5306).

SUPPLEMENTARY INFORMATION:

Background

Under 49 U.S.C. 30141(a)(1)(A), a motor vehicle that was not originally manufactured to conform to all applicable Federal motor vehicle safety standards shall be refused admission into the United States unless NHTSA has decided that the motor vehicle is substantially similar to a motor vehicle originally manufactured for importation into and sale in the United States, certified under 49 U.S.C. 30115, and of the same model year as the model of the motor vehicle to be compared, and is capable of being readily altered to conform to all applicable Federal motor vehicle safety standards.

Petitions for eligibility decisions may be submitted by either manufacturers or importers who have registered with NHTSA pursuant to 49 CFR part 592. As specified in 49 CFR 593.7, NHTSA publishes notice in the **Federal Register** of each petition that it receives, and affords interested persons an opportunity to comment on the petition. At the close of the comment period, NHTSA decides, on the basis of the petition and any comments that it has received, whether the vehicle is eligible for importation. The agency then publishes this decision in the **Federal Register**.

NHTSA received petitions from registered importers to decide whether the vehicles listed in Annex A to this notice are eligible for importation into the United States. To afford an opportunity for public comment, NHTSA published notice of these petitions as specified in Annex A. The reader is referred to those notices for a thorough description of the petitions. No comments were received in response to these notices. Based on its review of the information submitted by the petitioners, NHTSA has decided to grant the petitions.

Vehicle Eligibility Number for Subject Vehicles

The importer of a vehicle admissible under any final decision must indicate on the form HS–7 accompanying entry the appropriate vehicle eligibility number indicating that the vehicle is eligible for entry. Vehicle eligibility numbers assigned to vehicles admissible under this decision are specified in Annex A.

Final Decision

Accordingly, on the basis of the foregoing, NHTSA hereby decides that each motor vehicle listed in Annex A to this notice, which was not originally manufactured to comply with all applicable Federal motor vehicle safety standards, is substantially similar to a motor vehicle manufactured for importation into and/or sale in the United States, and certified under 49 U.S.C. 30115, as specified in Annex A, and is capable of being readily altered to conform to all applicable Federal motor vehicle safety standards.

Authority: 49 U.S.C. 30141(a)(1)(A) and (b)(1); 49 CFR 593.8; delegations of authority at 49 CFR 1.50 and 501.8.

Issued on: June 22, 1999.

Marilynne Jacobs,

Director, Office of Vehicle Safety Compliance.

Annex A—Nonconforming Motor Vehicles Decided to be Eligible for Importation

1. Docket No. NHTSA–99–5207
   Nonconforming Vehicle: 1986–1995 BMW R80 and R100 Motorcycles
   Substantially similar U.S.—certified vehicle: 1986–1995 BMW R80 and R100 Motorcycles
   Notice of Petition published at: 64 FR 13244 (March 17, 1999)
   Vehicle Eligibility Number: VSP–295
2. Docket No. NHTSA–99–5402
   Nonconforming Vehicles: 1993–1998 BMW K1100 and K1200 Motorcycles
   Substantially similar U.S.—certified vehicles: 1993–1998 BMW K1100 and K1200 Motorcycles
   Notice of Petition published at: 64 FR 19212 (April 19, 1999)
   Vehicle Eligibility Number: VSP–303
3. Docket No. NHTSA–99–5495–1
   Nonconforming Vehicles: 1995–1997 Mercedes-Benz E500
   Substantially similar U.S.—certified vehicles: 1995–1997 Mercedes-Benz E500
   Notice of Petition published at: 64 FR 18477 (April 14, 1999)
   Vehicle Eligibility Number: VSP–304
4. Docket No. NHTSA–99–5496
   Nonconforming Vehicles: 1995–1999 Mercedes-Benz S600
   Substantially similar U.S.—certified vehicles: 1995–1999 Mercedes-Benz S600
   Notice of Petition published at: 64 FR 18479 (April 14, 1999)
   Vehicle Eligibility Number: VSP–297
5. Docket No. NHTSA–99–5497
   Nonconforming Vehicles: 1994–1999 Cadillac DeVille
   Substantially similar U.S.—certified vehicles: 1994–1999 Cadillac DeVille
   Notice of Petition published at: 64 FR 18478 (April 14, 1999)
   Vehicle Eligibility Number: VSP–300
6. Docket No. NHTSA–99–5498
   Nonconforming Vehicles: 1997 Chevrolet Astro Van
   Substantially similar U.S.—certified vehicles: 1997 Chevrolet Astro Van
   Notice of Petition published at: 64 FR 18962 (April 16, 1999)
   Vehicle Eligibility Number: VSP–298
7. Docket No. NHTSA–99–5499
   Nonconforming Vehicle: 1992–1994 Mercedes-Benz 400SE
   Substantially similar U.S.—certified vehicle: 1992–1994 Mercedes-Benz 500SEL
   Notice of Petition published at: 64 FR 18961 (April 16, 1999)
   Vehicle Eligibility Number: VSP–296
8. Docket No. NHTSA–99–5500
   Nonconforming Vehicles: 1990–1998 Yamaha Virago Motorcycles
   Substantially similar U.S.—certified vehicles: 1990–1998 Yamaha Virago Motorcycles
   Notice of Petition published at: 64 FR 18960 (April 16, 1999)
   Vehicle Eligibility Number: VSP–301
9. Docket No. NHTSA–99–5530
   Nonconforming Vehicles: 1993–1997 Toyota Previa
   Substantially similar U.S.—certified vehicles: 1993–1997 Toyota Previa
   Notice of Petition published at: 64 FR 19581 (April 21, 1999)
   Vehicle Eligibility Number: VSP–302
10. Docket No. NHTSA–99–5531

Nonconforming Vehicles: 1990–1991 and 1993–1994 BMW 7 Series
Substantially similar U.S.—certified vehicles: 1990–1991 and 1993–1994 BMW 7 Series
Notice of Petition published at: 64 FR 19580 (April 21, 1999)
Vehicle Eligibility Number: VSP–299

[FR Doc. 99–16185 Filed 6–24–99; 8:45 am]

BILLING CODE 4910–59–P

DEPARTMENT OF TRANSPORTATION

National Highway Traffic Safety Administration

[Docket No. NHTSA 99–5862; Notice 1]

General Motors Corp.; Receipt of Application for Determination of Inconsequential Noncompliance

General Motors Corporation (GM) of Warren, Michigan, has applied to be exempted for the notification and remedy requirements of 49 U.S.C. Chapter 301 ''Motor Vehicle Safety'' because of a noncompliance with, Federal Motor Vehicle Safety Standard (FMVSS) No. 208, ''Occupant Crash Protection.'' The basis of the application is that the noncompliance is inconsequential to motor vehicle safety. GM has filed an appropriate report pursuant to 49 CFR part 573, ''Defect and Noncompliance Information Reports.''

This notice of receipt of an application is published under 49 U.S.C. 30118 and 30120 and does not represent any agency decision or other exercise of judgment concerning the merits of the application.

Description of Noncompliance

On February 2, 1999, NHTSA tested a 1999 Chevrolet Tahoe to the performance requirements of S13 of FMVSS No. 208 *Alternative unbelted test for vehicles manufactured before September 1, 2001.* The test was conducted at the Transportation Research Center of Ohio and the right front passenger Anthropomorphic Test Dummy (ATD) registered a neck extension moment of 67 Nm. This value exceeds the maximum limit of 57 Nm specified by S13.2(b) of the standard.

In response to the test failure, GM conducted an investigation to understand the subject test results and to determine the cause of the resultant neck extension moment of 67 Nm. After examining all the relevant information and conducting additional tests, GM estimates that 50 percent of the 1999 model year (MY) Chevrolet and GMC C/K vehicles manufactured between September 1, 1998 and May 5, 1999, may produce similar results if all the subject vehicles were subjected to the 30 mph Sled Test in accordance with S13.1 of FMVSS No. 208.

Supporting Information as Submitted by GM

There were 279,132 subject vehicles manufactured between September 1, 1998 and May 5, 1999, with right front passenger restraint systems that may not consistently meet the neck extension moment prescribed in S13.2(b) of the standard. A neck extension moment is produced during the test as a result of the reaction to forces acting on the head in such a way as to rotate the head rearward at the top of the neck. GM's analysis indicates that, due to test and/or product variations, approximately 50 percent of the right front passenger air bags could contribute to ATD kinematics that could allow the passenger ATD to exceed the 57 Nm neck extension value limit.

The prescribed Sled Test pulse is of a longer duration than a typical 30 mph rigid barrier pulse for the subject vehicles (125 msec versus approximately 80 msec). Because of this, the air bag must stay inflated longer during a test using the sled pulse to allow the unbelted ATD's torso energy to dissipate over a longer time period. Two design interventions involving the air bag system could be used to address this. It would be possible to increase the gas output into the deploying bag by adding more propellant to the inflator. However, this would be counter to the reasons the agency permitted less forceful air bags, and for the FMVSS 208 Sled Test being allowed as an alternative test method with an unbelted, 50th percentile ATD. The intent of the Sled Test provision, and the ongoing rulemaking to address air bag aggressivity, is to allow and encourage less aggressive air bag inflators in motor vehicles to reduce the inflation induced injury risks to out-of-position small adults and children.

A second possible approach is to reduce the venting capacity of the air bag. By reducing the venting capacity, the inflation gas is retained in the bag for a longer period of time resulting in bag pressure being retained over a longer period. GM test results (provided to NHTSA–OVSC in USG 3433; Part 5, dated May 7, 1999) consistently provided neck extension moments well below the 57 Nm limit when conducted with air bags having each of the two vent holes reduced from a 60 mm diameter to a 30 mm diameter. Considering all these resultant test values and the consistency of the neck extension measurements from these tests, GM implemented this vent size change in the subject vehicle production to further assure compliance. The implementation of this change was completed in GM's vehicle production facilities on May 5, 1999.

GM has examined the effect on motor vehicle safety involved in this noncompliance and the appropriateness of field action. This evaluation utilizes the total of 279,132 1999 MY Chevrolet and GMC C/K vehicles that were manufactured between September 1, 1998 and May 5, 1999 with the right front passenger air bag systems in question and very conservative estimates for the remainder of the analysis's multipliers. Approximately 50 percent of the subject vehicles, or 139,566 vehicles, may have a passenger air bag that could contribute to ATD kinematics that could allow the passenger ATD to exceed the 57 Nm neck extension requirement if tested to the S13 requirements of the standard. Projecting 5,700 deployments per 1 million car years for a 10 year vehicle life cycle, a total of 7,960 deployments can be expected. It is anticipated that one third of these deployments (2,653) would have a right front passenger present. Using the recognized current national seat belt use rate of 70 percent, 30 percent (or 796 occupants) of these deployments may involve an unbelted occupant. Approximately 20 percent of the deployments would be at a crash pulse similar to or more severe than used for the FMVSS 208 Sled Test, resulting in the potential that 159 of the passengers may be involved in such a deployment. Assuming 60 percent of these passengers are the same size or larger than the 50th percentile male ATD, 95 right front occupants could be large enough that sufficient torso energy may not be dissipated to meet the specific neck extension requirement of the standard.

The risk of neck injury to these 95 occupants can be estimated using the neck extension moment injury risk curve submitted to the agency during the referenced rulemaking and provided as Attachment A. It was also provided as Figure 4 of Attachment C—Proposal for Dummy Response Limits for FMVSS 208 Compliance Testing—in the AAMA response S98–13 to Docket No. NHTSA 98–4405; Notice 1 dated December 17, 1998. The risks of an AIS≥3 neck injury for the 50th percentile adult male experiencing a neck extension moment of 57 Nm (current FMVSS 208 requirement) and 67 Nm (measured during the subject agency enforcement test) for both a relaxed and tensed occupant are given in Table 1. Also shown are the estimated number of the 95 occupants who may experience an AIS≥3 neck injury.

TABLE 1.—INJURY RISK VALUE FOR AN AIS≥3 NECK INJURY OF NECK EXTENSION MOMENTS FOR NO MUSCLE TONE AND FOR 80 PERCENT MUSCLE TONE MEASURED WITH THE 50TH PERCENTILE ADULT MALE ATD

	Neck extension moment (Nm)	% Risk of AIS≥3 Neck Injury		Potential number of occupants with AIS≥3 neck injury	
		No muscle tone	80% muscle tone	No muscle tone	80% muscle tone
MVSS Req'mt	57	0.8	0.09	<1 (0.76)	0 (0.09)
TRC Test	67	2.2	0.3	2 (2.09)	0 (0.29)

Therefore, if corrective action is not implemented for the 279,132 subject vehicles, the increase in the estimated number of occupants that may be exposed to an AIS≥3 neck injury would be no more than one occupant, but more likely would be close to zero depending on the degree of muscle tone involved. The reason this increase is so small is that the current FMVSS 208 neck extension moment limit of 57 Nm is an extremely conservative limit. This value corresponds to only a 0.8 percent risk of an AIS≥3 neck injury with no muscle tone assumed and only a 0.09 percent risk if 80 percent muscle tone is assumed.

As part of the aforementioned ongoing rulemaking, the agency is currently considering the AAMA recommendation that an injury risk level of 5 percent be used for setting regulated injury criteria limits. This includes the recommendation that the neck extension limit be set at a 5 percent risk of an AIS≥3 neck injury. For out-of-position occupant measurements with the 50th percentile male ATD, this would be a 77 Nm limit without consideration for muscle tone, and the neck extension limit for in-position occupants would be 96 Nm considering 80 percent muscle tone. For either case, the resultant 67 Nm measurement from the agency's test is substantially below these recommended limits.

These recommended neck extension limits of 77 and 96 Nm are also exceptionally conservative compared to the risk level associated with brain injury that is currently comprehended in FMVSS 208. The current head injury criteria (HIC) limit of 1000 allows for a 16 percent risk of an AIS≥4 brain injury. Furthermore, the current FMVSS 208 injury criteria for chest displacement and femur loads are regulated at even higher risk levels than HIC. In fact, the rigid *barrier* test methods prescribed in FMVSS 208 for *both* belted and unbelted ATDs currently include these HIC, chest displacement and femur injury criteria, but do *not* currently specify any of the neck criteria associated with the Sled Test.

The current neck extension limit of 57 Nm is a very conservative limit, especially when compared to the current HIC, chest displacement and femur load limits required by FMVSS 208. Because of this and because of no more that one occupant and possible zero occupants may be at risk of an AIS ≥ 3 neck injury if corrective action is not implemented for 279,132 subject vehicles, GM believes this noncompliance is inconsequential as it relates to motor vehicle safety. Therefore, GM requests the affected vehicles be exempted from the recall and remedy provisions of Section 30120 of the Safety Act.

The agency is aware that significant controversy continues with regard to the injury criteria currently specified for the neck. This is a continuing topic of discussion between the agency and others in the ongoing rulemaking regarding air bag related injuries and fatalities to unbelted and out-of-position occupants. These ongoing rulemaking discussions support GM's belief that the current limit of 57 Nm for the specified neck extension criteria is well below the level necessary to meet the need for motor vehicle safety.

Interested persons are invited to submit written data, views and arguments on the petition of GM, described above. Comments should refer to the Docket Number and be submitted to: Docket Management, Room PL–401, 400 Seventh Street, SW, Washington, DC 20590. It is requested that two copies be submitted.

All comments received before the close of business on the closing date indicated below will be considered. The application and supporting materials, and all comments received after the closing date will also be filed and will be considered to the extent practicable. When the application is granted or denied, the Notice will be published in the **Federal Register** pursuant to the authority indicated below.

Comment closing date: July 26, 1999.

(49 U.S.C. 30118, 30120; delegations of authority at 49 CFR 1.50 and 49 CFR 501.8)

Issued on: June 21, 1999.

L. Robert Shelton,

Associate Administrator for Safety Performance Standards.

[FR Doc. 99–16165 Filed 6–24–99; 8:45 am]

BILLING CODE 4910–59–P

DEPARTMENT OF TRANSPORTATION

Surface Transportation Board

[STB Finance Docket No. 33757]

Delaware Transportation Group, Inc.—Corporate Family Exemption—Diamond State Port Railway Company, Inc., and Gettysburg Railway Company, Inc.

Delaware Transportation Group, Inc. (DTGI), a Class III rail common carrier, has filed a notice of exemption. The exempt transaction involves restructuring of the corporate family. John H. Marino owns a controlling interest in DTGI and Gettysburg Railway Company, Inc. (GRCI).[1] Through the transaction covered by this filing, the relationship between DTGI and GRCI would change from one between corporate siblings to one where DTGI would become the parent company of GRCI. DTGI would also control Diamond State Port Railway Company. Inc. (DSPR).

The transaction was scheduled to be consummated on or shortly after June 4, 1999.

This transaction is related to two simultaneously filed notices of exemption in STB Finance Docket No. 33755, *Diamond State Port Railway, Inc.—Lease and Operation Exemption—Diamond State Corporation and F.A. Potts & Company International, Inc.*, wherein DSPR seeks to lease and operate certain rail lines of the Diamond State Port Corporation and F.A. Potts & Company International, Inc., and STB Finance Docket No. 33756, *Delaware Transportation Group, Inc.*—Continuance in Control Exemption—Diamond State Port Railway Company, Inc., wherein DTGI seeks to continue in control of DSPR, upon its becoming a

[1] *See John H. Marino—Continuance in Control Exemption—Delaware Transportation Group, Inc., Gettysburg Railway Company, Inc., and Evansville Terminal Company, Inc.*, STB Finance Docket No. 33505 (STB served Nov. 21, 1997). As indicated in DTGI's notice, Mr. Marino never acquired any controlling interest in the Evansville Terminal Company, Inc.

Class III rail carrier as well as to control one existing railroad (GRCI).[2]

This is a transaction within a corporate family of the type specifically exempted from prior review and approval under 49 CFR 1180.2(d)(3). The parties state that the transaction will not result in adverse changes in service levels, significant operational changes, or a change in the competitive balance with carriers outside the corporate family.

Under 49 U.S.C. 10502(g), the Board may not use its exemption authority to relieve a rail carrier of its statutory obligation to protect the interests of its employees. Section 11326(c), however, does not provide for labor protection for transactions under sections 11324 and 11325 that involve only Class III rail carriers. Because this transaction involves Class III rail carriers only, the Board, under the statute, may not impose labor protective conditions for this transaction.

If the notice contains false or misleading information, the exemption is void *ab initio*. Petitions to reopen the proceeding to revoke the exemption under 49 U.S.C. 10502(d) may be filed at any time. The filing of a petition to revoke will not automatically stay the transaction.

An original and 10 copies of all pleadings, referring to STB Finance Docket No. 33757, must be filed with the Surface Transportation Board, Office of the Secretary, Case Control Unit, 1925 K Street, NW., Washington, DC 20423–0001. In addition, a copy of each pleading must be served on Robert A. Wimbish, Rea, Cross, & Auchincloss, 1707 L Street, NW., Suite 570, Washington, DC 20036.

Board decisions and notices are available on our website at ''WWW.STB.DOT.GOV.''

Decided: June 21, 1999.

By the Board, David M. Konschnik, Director, Office of Proceedings.

Vernon A. Williams,

Secretary.

[FR Doc. 99–16239 Filed 6–24–99; 8:45 am]

BILLING CODE 4915–00–P

[2] *See Gettysburg Railway Company, Inc.—Lease and Operation Exemption—Delaware Transportation Group, Inc.*, STB Finance Docket No. 33504 (STB served Nov. 21, 1997).

DEPARTMENT OF TRANSPORTATION

Surface Transportation Board

[STB Finance Docket No. 33756]

Delaware Transportation Group, Inc.—Continuance in Control Exemption—Diamond State Port Railway Company, Inc.

Delaware Transportation Group, Inc. (DTGI), has filed a notice of exemption to continue in control of Diamond State Port Railway Company, Inc. (DSPR), upon DSPR's becoming a Class III railroad.

The transaction was scheduled to be consummated on or shortly after June 4, 1999.

This transaction is related to two simultaneously filed verified notices of exemption in STB Finance Docket No. 33755, *Diamond State Port Railway, Inc.—Lease and Operation Exemption—Diamond State Corporation and F.A. Potts & Company International, Inc.*, wherein DSPR seeks to lease and operate certain rail lines of Diamond State Port Corporation and F.A. Potts & Company International, Inc., and STB Finance Docket No. 33757, *Delaware Transportation Group, Inc.—Corporate Family Exemption—Diamond State Port Railway Company, Inc., and Gettysburg Railway Company, Inc.*, wherein DTGI will become the parent company for its affiliates Gettysburg Railway Company, Inc., (GRCI) and DSPR.

In addition to its control of DSPR, DTGI will control one previously existing Class III railroad: GRCI, operating in the State of Pennsylvania.[1]

DTGI states that: (i) The railroads will not connect with each other or any railroad in their corporate family; (ii) the transaction is not part of a series of anticipated transactions that would connect the railroads with each other or any railroad in their corporate family; and (iii) the transaction does not involve a Class I carrier. Therefore, the transaction is exempt from the prior approval requirements of 49 U.S.C. 11323. *See* 49 CFR 1180.2(d)(2).

Under 49 U.S.C. 10502(g), the Board may not use its exemption authority to relieve a rail carrier of its statutory obligation to protect the interests of its employees. Section 11326(c), however, does not provide for labor protection for transactions under sections 11324 and 11325 that involve only Class III rail carriers. Because this transaction involves Class III rail carriers only, the Board, under the statute, may not impose labor protective conditions for this transaction.

If the verified notice contains false or misleading information, the exemption is void *ab initio*. Petitions to revoke the exemption under 49 U.S.C. 10502(d) may be filed at any time. The filing of a petition to revoke will not automatically stay the transaction.

An original and 10 copies of all pleadings, referring to STB Finance Docket No. 33756, must be filed with the Surface Transportation Board, Office of the Secretary, Case Control Unit, 1925 K Street, NW, Washington, DC 20423–0001. In addition, a copy of each pleading must be served on Robert A. Wimbish, Rea, Cross & Auchincloss, 1707 L Street, NW, Suite 570, Washington, DC 20036.

Board decisions and notices are available on our website at ''WWW.STB.DOT.GOV.''

Decided: June 21, 1999.

By the Board, David M. Konschnik, Director, Office of Proceedings.

Vernon A. Williams,

Secretary.

[FR Doc. 99–16241 Filed 6–24–99; 8:45 am]

BILLING CODE 4915–00–P

[1] *See Gettsyburg Railway Company, Inc.—Lease and Operate Exemption—Delaware Transportation Group, Inc.*, STB Finance Docket No. 33504 (STB served Nov. 21, 1997).

DEPARTMENT OF TRANSPORTATION

Surface Transportation Board

[STB Finance Docket No. 33755]

Diamond State Port Railway Company, Inc.—Lease and Operation Exemption—Diamond State Port Corporation and F.A. Potts & Company International, Inc.

Diamond State Port Railway Company, Inc. (DSPR), a noncarrier, has filed a notice of exemption under 49 CFR 1150.31 to lease and operate approximately 1.1 miles of certain rail lines owned by the Diamond State Port Corporation (DPC), a political subdivision of the State of Delaware, and F.A. Potts & Company International, Inc. (FAPC), located adjacent to and within the Port of Wilmington in the State of Delaware. The lines involved consist of the following: (1) Approximately 0.5 miles of DPC's rail line (the Diamond Line) extending from a connection with Consolidated Rail Corporation's (Conrail) New Castle Secondary Track at approximately Conrail milepost 2.0, to the vicinity of Gist Road in Wilmington, DE; and (2) approximately 3,000 feet of FAPC's trackage (the Potts Line) extending from a connection with Conrail (approximately 300 feet north of the

Diamond Line's connection with Conrail's New Castle Secondary Track) to the vicinity of Christiana Ave., and U.S. Interstate 495.[1] Upon exercising the authority granted in this exemption, DSPR will become a Class III rail carrier.[2]

DSPR will continue rail service formerly provided by Conrail to existing rail customers located in the above-described area.[3]

The transaction was scheduled to be consummated on or shortly after June 4, 1999.

This transaction is related to two simultaneously filed notices of exemption in STB Finance Docket No. 33756, *Delaware Transportation Group, Inc.—Continuance in Control Exemption—Diamond State Port Railway Company, Inc.*, wherein Delaware Transportation Group, Inc. (DGTI) seeks to continue in control of DSPR, upon DSPR's becoming a Class III rail carrier and one existing Class III railroad,[4] and STB Finance Docket No. 33757, *Delaware Transportation Group, Inc.—Corporate Family Exemption—Diamond State Port Railway Company, Inc., and Gettysburg Railway Company, Inc.*, wherein DTGI will become the parent company of Gettysburg Railway Company, Inc., and DSPR.

If the notice contains false or misleading information, the exemption is void *ab initio*. Petitions to revoke the exemption under 49 U.S.C. 10502(d) may be filed at any time. The filing of a petition to revoke will not automatically stay the transaction.

An original and 10 copies of all pleadings, referring to STB Finance Docket No. 33755, must be filed with the Surface Transportation Board, Office of the Secretary, Case Control Unit, 1925 K Street, NW, Washington, DC 20423–0001. In addition, one copy of each pleading must be served on Robert A. Wimbish, Rea, Cross & Auchincloss, 1707 L Street, NW, Suite 570, Washington, DC 20036.

Board decisions and notices are available on our website at ''WWW.STB.DOT.GOV.''

Decided: June 21, 1999.

By the Board, David M. Konschnik, Director, Office of Proceedings.

Vernon A. Williams,

Secretary.

[FR Doc. 99–16240 Filed 6–24–99; 8:45 am]

BILLING CODE 4915–00–MP

[1] As indicated by DSPR in its notice, because both of the lines described above have been operated until now as spur, industrial, switching or terminal trackage, the lines in question have never, to DSPR's knowledge, been assigned milepost numbers or valuation station numbers. The property descriptions provided are offered in lieu of the milepost or valuation station data typically provided to define the origination and termination points on rail lines.

[2] DSPR states that its revenues will not exceed those that would qualify it as a Class III rail carrier and its revenues are not projected to exceed $5 million.

[3] Norfolk Southern Railway has assumed service previously provided by Conrail on connecting main lines into the Wilmington, DE area. *See CSX Corporation and CSX Transportation, Inc., Norfolk Southern Corporation and Norfolk Southern Railway Company—Control and Operating Leases/Agreements—Conrail, Inc., and Consolidated Rail Corporation*, STB Finance Docket No. 33388, Decision No. 89 (STB served July 23, 1998).

[4] *See Gettsyburg Railway Company. Inc.—Lease and Operation Exemption—Delaware Transportation Group, Inc.*, STB Finance Docket No. 33504 (STB served Nov. 21, 1997).

DEPARTMENT OF TRANSPORTATION

Surface Transportation Board

[STB Finance Docket No. 33764]

Rock & Rail, Inc.—Acquisition and Operation Exemption—Railroad Lines Near Kelker, El Paso County, CO

Rock & Rail, Inc. (R&R), a Class III rail common carrier, has filed a verified notice of exemption under 49 CFR 1150.41 to acquire and operate sections of track it has purchased from several non-railroad owners.[1] The railroad lines are approximately a mile in length, beginning at a turnout from a siding paralleling the line of The Burlington Northern Santa Fe Railway Company at milepost 658.45, near Kelker, El Paso County, CO.

The transaction is scheduled to be consummated on or after June 17, 1999.

If the notice contains false or misleading information, the exemption is void *ab initio*. Petitions to revoke the exemption under 49 U.S.C. 10502(d) may be filed at any time. The filing of a petition to revoke does not automatically stay the transaction.

An original and 10 copies of all pleadings, referring to STB Finance Docket No. 33764, must be filed with the Surface Transportation Board, Office of the Secretary, Case Control Unit, 1925 K Street, NW, Washington, DC 20423–0001. In addition, a copy of each pleading must be served on Fritz R. Kahn, Esq., 1100 New York Avenue, NW, Suite 750 West, Washington, DC 20005–3934.

Decided: June 17, 1999.

By the Board, David M. Konschnik, Director, Office of Proceedings.

Vernon A. Williams,

Secretary.

[FR Doc. 99–16131 Filed 6–24–99; 8:45 am]

BILLING CODE 4915–00–P

[1] R&R represents that the sellers of the track are Kappa Sizma's Gamma-O Educational Foundation, First United Methodist Church, and Ochs Brothers, a Partnership.

Corrections

Federal Register

Vol. 64, No. 122

Friday, June 25, 1999

This section of the FEDERAL REGISTER contains editorial corrections of previously published Presidential, Rule, Proposed Rule, and Notice documents. These corrections are prepared by the Office of the Federal Register. Agency prepared corrections are issued as signed documents and appear in the appropriate document categories elsewhere in the issue.

ENVIRONMENTAL PROTECTION AGENCY

40 CFR Part 90

[FRL 6308–6]

RIN 2060–AE29

Phase 2 Emission Standards for New Nonroad Spark-Ignition Nonhandheld Engines At or Below 19 Kilowatts

Correction

In rule document 99–6175, beginning on page 15208, in the issue of Tuesday, March 30, 1999, make the following correction:

§ 90.706 [Corrected]

On page 15247, in the second column, in § 90.706 (b)(7), the equation is corrected to read as set forth below:

G:\GRAPHICS\ER30MR99.001

[FR Doc. C9–6175 Filed 6–24–99; 8:45 am]

BILLING CODE 1505–01–D

DEPARTMENT OF TRANSPORTATION

Coast Guard

33 CFR Part 165

[CGD01–98–165]

RIN 2121–AA97

Regulated Navigation Area: Kill Van Kull Channel, Newark Bay Channel, South Elizabeth Channel, Elizabeth Channel, Port Newark Channel and New Jersey Pierhead Channel, New York and New Jersey

Correction

In rule document 99–9431, beginning on page 18577, in the issue of Thursday, April 15, 1999, make the following correction:

§ 165.165 [Corrected]

On page 18580, in the first column, in § 165.165, paragraph designation ''(e)'' should read ''(c)''.

[FR Doc. C9–9431 Filed 6–24–99; 8:45 am]

BILLING CODE 1505–01–D

federal register

Friday
June 25, 1999

Part II

Department of Transportation

Federal Aviation Administration

14 CFR Parts 417 and 420

Licensing and Safety Requirements for Operation of a Launch Site; Proposed Rule

DEPARTMENT OF TRANSPORTATION

Federal Aviation Administration

14 CFR Parts 417, 420

[Docket No. FAA–1999–5833; Notice No. 99–07]

RIN 2120–AG15

Licensing and Safety Requirements for Operation of a Launch Site

AGENCY: Federal Aviation Administration (FAA), DOT.

ACTION: Notice of proposed rulemaking (NPRM).

SUMMARY: The Department of Transportation's (DOT or the Department) Federal Aviation Administration (FAA) is proposing to amend its commercial space transportation licensing regulations to add licensing and safety requirements for the operation of a launch site. To date, commercial launches have occurred principally at federal launch ranges under safety procedures developed by federal launch range operators. To enable the development and use of launch sites that are not operated by a federal launch range, rules are needed to establish specific licensing and safety requirements for operating a launch site, whether that site located on or off of a federal launch range. These proposed rules would provide licensed launch site operators with licensing and safety requirements to protect the public from the risks associated with activities at a launch site.

A separate rulemaking will address licensing and safety requirements for operation of a reentry site.

DATES: Comments on the proposed regulations must be submitted on or before September 23, 1999.

ADDRESSES: Comments on this proposed rulemaking should be mailed or delivered, in duplicate, to: U.S. Department of Transportation Dockets, Docket No. FAA–1999–5833, 400 Seventh Street, SW, Room Plaza 401, Washington, DC 20590. Comments may also be sent electronically to the following Internet address: 9–NPRM–CMTS@faa.gov. Comments may be filed and/or examined in Room Plaza 401 between 10 a.m. and 5 p.m. weekdays except Federal holidays.

FOR FURTHER INFORMATION CONTACT: J. Randall Repcheck, Licensing and Safety Division (AST–200), Commercial Space Transportation, Federal Aviation Administration, 800 Independence Avenue, Washington, DC 20591; telephone (202) 267–8602; or Laura Montgomery, Office of the Chief Counsel (AGC–250), FAA, 800 Independence Avenue, Washington, DC 20591; telephone (202) 267–3150.

SUPPLEMENTARY INFORMATION:

Comments Invited

Interested persons are invited to participate in this rulemaking by submitting such written data, views, or arguments as they may desire. Comments relating to the environmental, energy, federalism, or economic impact that might result from adopting the proposals in this notice are also invited. Substantive comments should be accompanied by cost estimates. Comments must identify the regulatory docket or notice number and be submitted in triplicate to the Rules Docket address specified above.

All comments received, as well as a report summarizing each substantive public contact with FAA personnel on this rulemaking, will be filed in the docket. The docket is available for public inspection before and after the comment closing date.

All comments received on or before the closing date will be considered by the FAA before taking action on this proposed rulemaking. Late-filed comments will be considered to the extent practicable, and consistent with statutory deadlines. The proposals contained in this Notice may be changed in light of the comments received.

Commenters wishing the FAA to acknowledge receipt of their comments submitted in response to this notice must include a pre-addressed, stamped postcard with those comments on which the following statement is made: ''Comments to Docket No. FAA–1999–5833.'' The postcard will be date stamped and mailed to the commenter.

Availability of NPRMs

An electronic copy of this document may be downloaded using a modem and suitable communications software from the FAA regulations section of the Fedworld electronic bulletin board service (telephone: 703–321–3339), the Government Printing Office's electronic bulletin board service (telephone: 202–512–1661), or the FAA's Aviation Rulemaking Advisory Committee Bulletin Board service (telephone: (800) 322–2722 or (202) 267–5948). Internet users may reach the FAA's web page at http://www.faa.gov/avr/arm/nprm/nprm.htm or the Government Printing Office's webpage at http://www.access.gpo.gov/nara for access to recently published rulemaking documents.

Any person may obtain a copy of this NPRM by submitting a request to the Federal Aviation Administration, Office of Rulemaking, ARM–1, 800 Independence Avenue, SW., Washington, DC 20591, or by calling (202) 267–9680. Communications must identify the notice number or docket number of this NPRM.

Persons interested in being placed on the mailing list for future NPRM's should request from the above office a copy of Advisory Circular No. 11–2A, Notice of Proposed Rulemaking Distribution System, that describes the application procedure.

Outline of Notice of Proposed Rulemaking:

I. Background
  A. The FAA's Commercial Space Transportation Licensing Role
  B. Growth and Current Status of Launch Site Industry
  C. Current Practices
II. Discussion of Proposed Regulations
  A. License and Safety Requirements for Operation of a Launch Site
  B. Explosive Site Plan Review
  C. Explosive Mishap Prevention Measures
  D. Launch Site Location Review
  E. License Conditions
  F. Operational Responsibilities
III. Part Analysis
IV. Required Analyses

I. Background

The Commercial Space Launch Act of 1984, as codified at 49 U.S.C. Subtitle IX—Commercial Space Transportation, ch. 701, Commercial Space Launch Activities, 49 U.S.C. 70101–70121 (the Act), authorizes the Secretary of Transportation to license a launch or the operation of a lunch site carried out by a U.S. citizen or within the United States. 49 U.S.C. 70104, 70105. The Act directs the Secretary to exercise this responsibility in the interests of public health and safety, safety of property, and the national security and foreign policy interests of the United States 49 U.S.C. 70105. On August 4, 1994, a National Space Transportation Policy reaffirmed the government's commitment to the commercial space transportation industry and the critical role of the Department of Transportation (DOT) in encouraging and facilitating private sector launch activities. A National Space Policy released on September 19, 1996, notes and reaffirms that DOT is responsible as the lead agency for regulatory guidance pertaining to commercial space transportation activities.

A. The FAA's Commercial Space Transportation Licensing Role

On November 15, 1995, the Secretary of Transportation delegated commercial space licensing authority to the Federal

Aviation Administration. The FAA licenses commercial launches and the operation of launch sites pursuant to the Act and implementing regulations at 14 CFR Ch. III. The commercial launch licensing regulations were issued in April 1988, when no commercial launches had yet taken place. Accordingly, DOT established a flexible licensing process intended to be responsive to an emerging industry while ensuring public safety. The Department noted that it would ''continue to evaluate and, when necessary, reshape its program in response to growth, innovation, and diversity in this critically important industry.'' ''Commercial Space Transportation; Licensing Regulations,'' 53 FR 11,004, 11,006 (Apr. 4, 1988).

Under the 1988 regulations, DOT implemented a case-by-case approach to evaluating launch and launch site operator license applications. At the time, it was envisioned that most commercial launches would take place from federal launch ranges, which imposed extensive ground and flight safety requirements on launch operators, pending the development of commercial launch sites. The Federal launch ranges provided commercial launch operators with facilities and launch support, including flight safety services.

Since 1988, DOT and now the FAA have taken steps designed to simplify further the licensing process for launch operators. The regulatory and licensing emphasis during the past decade has been on launch operators. The emergence of a commercial launch site sector has only become a reality during the past few years.

B. Growth and Current Status of Launch Site Industry

The commercial space transportation industry continues to grow and diversify. Between the first licensed commercial launch in August 1989, and June 1999, 113 licensed launches have taken place from five different federal launch ranges, one from a launch site operated by a licensed launch site operator and one has taken place from Spain. The vehicles have included traditional orbital expendable launch vehicles, such as the Atlas, Titan, and Delta, sub-orbital launch vehicles such as the Starfire, new expendable launch vehicles using traditional launch techniques, such as Athena and Conestoga, and unique vehicles, such as the air-borne Pegasus. In a notice of proposed rulemaking issued on March 19, 1997, 62 FR 13216, the FAA discussed how the commercial launch industry has evolved from one relying on traditional orbital and suborbital launch vehicles to one with a diverse mix of vehicles using new technology and new concepts. A number of international ventures involving U.S. companies have also formed, further adding to this diversity.

Development in cost savings and innovation are not confined to the launch industry. The launch site industry, the focus of this NPRM, has also made progress. Commercial launch site operations are coming on line with the stated goal of providing flexible and cost-effective facilities both for existing launch vehicles and for new vehicles. When the commercial launch industry began, commercial launch companies based their launch operations chiefly at federal launch ranges operated by the Department of Defense (DOD) and the National Aeronautics and Space Administration (NASA). Federal launch ranges that have supported licensed launches include the Eastern Range, located at Cape Canaveral Air Station in Florida (CCAS), and the Western Range located at Vandenberg Air Force Base (VAFB), in California, both operated by the U.S. Air Force; Wallops Flight Facility in Virginia, operated by NASA; White Sands Missile Range (WSMR) in New Mexico, operated by the U.S. Army; and the Kauai Test Facility in Hawaii, operated by the U.S. Navy. Federal launch ranges provide the advantage of existing launch infrastructure and range safety services. Launch companies are able to obtain a number of services from a federal launch range, including radar, tracking and telemetry, flight termination and other launch services.

Today, most commercial launches still take place from federal launch ranges; however, this pattern may change as other launch sites become more prevalent. On September 19, 1996, the FAA granted the first license to operate a launch site to Spaceport Systems International to operate California Spaceport. That launch site is located within VAFB. Three other launch site operators have received licenses. Spaceport Florida Authority (SEA) received an FAA license to operate Launch Complex 46 at CCAS as a launch site. Virginia Commercial Space Flight Authority (VCSFA) received a license to operate Virginia Spaceflight Center (VSC) within NASA's Wallops Flight Facility. Most recently, Alaska Aerospace Development Corporation (AADC) received a license to operate Kodiak Launch Complex (KLC) as a launch site on Kodiak Island, Alaska. The New Mexico Office of Space Commercialization (NMOSC) proposes to operate Southwest Regional Spaceport (SRS) adjacent to the White Sands Missile Range as a site for reusable launch vehicles. It is evident from this list that federal launch ranges still play a role in the licensed operation of a number of launch sites. California Spaceport, Spaceport Florida and VSC are located on federal launch range property.

Whether launching from a federal launch range, a launch site located on a federal launch range, or a non-federal launch site, a launch operator is responsible for ground and flight safety under its FAA license. At a federal launch range a launch operator must comply with the rules and procedures of the federal launch range. The safety rules, procedures and practice, in concert with the safety functions of the federal launch ranges, have been assessed by the FAA, and found to satisfy the majority of the FAA's safety concerns. In contrast, when launching from a non-federal launch site, a launch operator's responsibility for ground and flight safety takes on added importance. In the absence of federal launch range oversight, it will be incumbent upon each launch operator to demonstrate the adequacy of its ground and flight safety to the FAA.

C. Current Practices

Because of the time and investment involved in bringing a commercial launch facility into being, several entities that have been planning to establish these facilities asked the DOT for guidance concerning the information that might be requested as part of an application for a license to operate a launch site. In response to these requests. DOT's then Office of Commercial Space Transportation (Office) published ''Site Operators License, Guidelines for Applicants,'' on August 8, 1995, as guidance for potential launch site operators. The guidelines describe the information that DOT, and now the FAA, expects from an applicant for a license to operate a commercial launch site. This information includes launch site location information, a hazard analysis, and a launch site safety operations document that governs how the facility should be operated to ensure public safety and the safety of property. The Office intended that the guidelines would assist an applicant with the parts of the application that are critical to assuring the suitability of the launch site location, the applicant's organization, and the facility for providing safe operations.

The Office issued the guidelines as an interim measure for potential developers of launch sites pending this

rulemaking, and the guidelines describe the information that the FAA requests of an applicant as part of its application for a license to operate a launch site. The pace of development of the launch site industry has resulted in the FAA describing the process and requirements for applications for launch site operator licenses under the guidelines. As noted above, the FAA issued its first license to operate a launch site to Spaceport Systems International for the operation of California Spaceport. The FAA issued this license under its general authority under 49 U.S.C. 70104 and 70105 and 14 CFR Ch. III to license the operation of a launch site. Because the operation of California Spaceport as a launch site occurs at a federal launch range, the U.S. Air Force is expected to play a significant role in California Spaceports's safety process. In fact, the FAA was able to review the Spaceport Systems International application expeditiously because the applicant certified its intention to observe the safety requirements currently applied by the Western Range and contained in ''Eastern and Western Range 127–1. Range Safety Requirements (EWR 127–1),'' (Mar. 1995).[1] The FAA determined that applicant compliance with EWR 127–1, together with Air Force approval of other important elements of the operation of a launch site protected public health and safety and the safety of property. In general, the FAA deems the compliance by a licensed launch site operator with these requirements in combination with other safety practices imposed by a federal launch range as acceptable for purposes of protecting the public and property from hazards associated with launch site activities at a licensed launch site operator's facilities. In 1997, the FAA entered into a Memorandum of Agreement with Department of Defense and National Aeronautics and Space Administration regarding safety oversight of licensed launch site operators located on federal launch ranges.

Until these proposed rules become final, the guidelines provide the only published criteria for guiding a prospective license applicant and in identifying the criteria that the FAA uses in determining whether a proposed commercial launch site is acceptable.

Comparison of the Guidelines and the Proposed Regulations

The existing guidelines will no longer be in effect once the proposed regulations are issued as final rules. A comparison of some of the similarities and differences may therefore prove of assistance. The FAA will issue a license to operate a launch site under either the guidelines or the proposed rules only if the operation of the launch site will not jeopardize the public health and safety, the safety of property, or national security or foreign policy interests of the United States. The guidelines are flexible and are intended to identify the major elements of an application and lead the applicant through the application process with the FAA. The proposed rules would codify the requirements that must be met before a license will be issued.

The guidelines and the proposed rules share some common elements, namely, the need for the applicant to supply information to support the FAA's environmental determination under the National Environmental Policy Act (NEPA) and the FAA's policy review that addresses national security and foreign policy issues. These requirements are discussed in detail below, in the description of the proposed regulations. Under the proposed regulations, the information requirements for these reviews remain for the most part unchanged from the guidelines.

A review of the suitability of the proposed location of the launch site is an important component of both the guidelines and the proposed regulations. Although both approaches call for a site location review, the reviews differ in breadth and specificity. The guidelines request an applicant to provide information regarding geographic characteristics, flight paths and impact areas and the meteorological environment. To describe a launch site's geographic characteristics, an applicant is requested to provide information regarding the launch site location, size, and shape, its topographic and geological characteristics, its proximity to populated areas, and any local commercial and recreational activities that may be affected by launches such as air traffic, shipping, hunting, and offshore fishing. An applicant also provides planned possible flight paths and general impact areas designated for launch. If planned flight corridors overfly land, the guidelines request that an applicant provide flight safety analyses for generic sets of launch vehicles and describe, where applicable, any arrangements made to clear the land of people prior to launch vehicle flight. With respect to the meteorological environment, the guidelines request an applicant to provide data regarding temperature, surface and upper wind direction and velocity, temperature inversions, and extreme conditions that may affect the safety of launch site operations. Under the guidelines, an application should include the frequency (average number of days for each month) of extremes in wind or temperature inversion that could have an impact on launch.

In contrast, the proposed rules would require an applicant to use specified methods to demonstrate the suitability of the launch site location for launching at least one type of launch vehicle, including orbital, guided sub-orbital, or unguided sub-orbital expendable launch vehicles, and reusable launch vehicles. Each proposed launch point on the launch site must be evaluated for each type of launch vehicle that the applicant wishes to have launched from the launch point. An applicant would be provided with a choice of methods to develop a flight corridor for a representative launch of an orbital or guided sub-orbital expendable launch vehicle, or to develop a set of impact dispersion areas for a representative launch of an unguided sub-orbital expendable launch vehicle. If a flight corridor or set of impact dispersion areas exists that does not encompass populated areas, no additional analysis would be required. Otherwise, an applicant would be required to conduct a risk analysis to demonstrate that the risk to the public from a representative launch would not exceed a casualty expectation (E_c) of $30 \times 10_{-6}$. The FAA would review the applicant's analyses to ensure the applicant's process was correct, and would approve the launch site location if the E_c risk criteria were met.

Under either the guidelines or the proposed regulations, little or no launch site location review would be needed if the applicant proposed to locate a launch site at a federal launch range. The fundamental purpose of the FAA's proposed launch site location review—to assure that a launch may potentially take place safely from the proposed launch site—has been amply demonstrated at each of the ranges. Exceptions may occur if a prospective launch site operator plans to use a launch site at a federal launch range for launches markedly different from past federal launch range launches, or if an applicant proposes a new launch point from which no launch has taken place.

The guidelines and proposed regulations differ markedly in their approach to ground and flight safety. For ground safety under the guidelines, applicants perform a hazard analysis and develop a comprehensive ground safety plan and a safety organization. Explosive safety is part of the analysis

[1] EWR 127–1 is updated on an ongoing basis. The latest version of these requirements may be found at http://www.pafb.af.mil/45SW/.

and safety plan. In contrast, the proposed regulations require the submission of an explosive site plan, but impose fewer operational ground safety responsibilities on a launch site operator. For flight safety, under the guidelines and proposed rules, a launch site operator license contains minimal flight safety responsibilities. The FAA assigns almost all responsibility for flight safety and significant ground safety responsibility to a licensed launch operator. Extensive ground and flight safety requirements will accompany a launch license. This does not mean a launch site operator cannot offer flight safety services or equipment to its customers. However, the adequacy of such service and equipment typically will be assessed in the FAA's review of a launch license application.

II. Discussion of Proposed Regulations

The proposed regulations specify who must obtain a license to operate a launch site, application requirements and licensee responsibilities. Because a launch licensee's license covers ground operations as well as the flight of a launch vehicle, a launch operator is not required to obtain a license to operate a launch site. The FAA is aware that a launch operator may select a launch site for its own launches. In that event, a launch operator requires a license to launch. Only if a prospective launch site operator proposes to offer its launch site to others, need that person obtain a license to operate a launch site.

By means of operational, location, and site layout constraints, the FAA intends its regulations to ensure that the public is not harmed by launches that take place from a launch site whose operation the FAA has licensed. Additionally, in the course of a license review, the FAA will ensure that environmental and international obligations are addressed, and that national security interests are reviewed by the appropriate agencies. To further these objectives, the FAA proposes to create in 14 CFR Chapter III a new part 420 to contain the requirements for obtaining and possessing a license to operate a launch site. The FAA's proposed part 420 would require an applicant to obtain certain FAA approvals in order to receive a license to operate a launch site. These required approvals consist of policy, explosive site plan, and location approvals. Environmental review may precede or be concurrent with the licensing process.

The grant of a license to operate a launch site will not guarantee that a launch license will be granted for any particular launch proposed for the site. All launches will be subject to separate FAA review and licensing.

A. Licensing and Safety Requirements for Operation of a Launch Site

The FAA's proposed approach to licensing the operation of a launch site would focus on four areas of concern critical to ensuring that operation of a launch site would not jeopardize public health and safety, the safety of property or foreign policy and other U.S. interests. These reviews would encompass the environment, policy, siting of explosives, and site location. Under the proposed regulations, an applicant would be required to provide the FAA with information sufficient to conduct environmental and policy reviews and determinations. An applicant would also be required to submit an explosive site plan that shows the location of all explosive hazard facilities and distances between them, and the distances to public areas.

In the case of launch site location approval, the proposed regulations would provide an applicant options for proving to the FAA that a launch could be conducted from the site without jeopardizing public health and safety. The requirement for a launch site location approval would not normally apply to an applicant who proposes to operate an existing launch point at a federal launch range, unless the applicant plans to use a launch point different than used previously by the federal launch range, or to use an existing launch point for a different type or larger launch vehicle than used in the past. The fact that launches have taken place safely from any particular launch point at a federal launch range may provide the same demonstration that would be accomplished by the FAA's proposed location review: Namely, a showing that launch may occur safely from the site.

The FAA is proposing to impose specific ground safety responsibilities on a licensed launch site operator, and will require that an applicant demonstrate how those requirements will be met. A launch site operator licensee's responsibilities would include: Preventing unauthorized public access to the site; properly preparing the public and customers to visit the site; informing customers of limitations on use of the site; scheduling and coordinating hazardous activities conducted by customers; and arranging for the clearing of air and sea routes and notifying adjacent property owners and local jurisdictions of the pending flight of a launch vehicle. Part 420 would also contain launch site operator responsibilities with regard to recordkeeping, license transfer, compliance monitoring, accident investigation and explosives. Other federal government agencies have jurisdiction over a number of ground safety issues, and the FAA does not intend to duplicate their efforts.[2] [3] The FAA will revisit ground safety issues in its development of rules for launches from non-federal launch sites.

Environmental

Licensing the operation of a launch site is a major federal action for purposes of the National Environmental Policy Act, 42 U.S.C. 4321 et seq. As a result, the FAA is required to assess the environmental impacts of constructing and operating a proposed launch site to determine whether these activities will significantly affect the quality of the environment. Although the FAA is responsible under NEPA regulations for preparing an environmental assessment or environmental impact statement, the proposed rules continue to require a license applicant to provide the FAA with sufficient information to conduct an analysis in accordance with the requirements of the Council on Environmental Quality (CEQ) Regulations Implementing the Procedural Provisions of NEPA, 40 CFR parts 1500–1508, and the FAA's Procedures for Considering Environmental Impacts, FAA Order

[2] The U.S. Occupational Safety and Health Administration (OSHA) and the U.S. Environmental Protection Agency (EPA) play a role in regulating ground activities at a launch site. OSHA regulations cover worker safety issues, and may, as a by-product, help protect public safety as well. One provision of particular note is 29 CFR 1910.119, process safety management of highly hazardous chemicals (PSM). The requirements of the PSM standard are intended to eliminate or mitigate the consequences of releases of highly hazardous chemicals that may be toxic, reactive, flammable, or explosive. Management controls are emphasized to address the risks associated with handling or working near hazardous chemicals. These requirements may apply to some launch site and launch operators. EPA regulations are designed to protect the public health and safety from releases of chemicals. One regulation of note is 40 CFR part 68, Accidental release prevention provisions. It applies to an owner or operator of a stationary source that has more than a threshold quantity of a regulated substance in a process, and requires the owner or operator to develop and implement a risk management program to prevent accidents and limit the severity of any accidents that occur. The EPA rule further requires sources to conduct an offsite consequence analysis to define the potential impacts of worst-case releases and other release scenarios. For any process whose worst-case release would reach the public, the source must develop and implement a prevention program and an emergency response program. Both the EPA and OSHA prevention rules require regulated entities to conduct formal analyses of the risks involved in the use and storage of covered substances and consider all possible ways in which existing systems could fail and result in accidental release.

[3] ATF regulations cover the long-term storage of explosives.

1050.1D. An applicant will typically engage a contractor with specialized experience in the NEPA process to conduct the study underpinning the FAA's environmental analysis. This rulemaking marks no change in the environmental requirements attendant to obtaining a license to operate a launch site.

The FAA encourages an applicant to begin the environmental review, including the gathering of pertinent information to perform the assessment, early in the planning process, but after the applicant has defined its proposed action and considered feasible alternatives. The FAA will determine whether a finding of no significant impact (FONSI) may be issued after an environmental assessment, or whether an environmental impact statement followed by a record of decision is necessary. An applicant may be subject to restrictions on activities at a proposed launch site. An applicant may acquire property for future use as a launch site; however, absent a FONSI, the FAA must prepare an environmental review that includes consideration of reasonable alternatives to the site. According to the CEQ regulations as interpreted by the courts, an applicant may not use the purchase of a site or construction at the site to limit the array of reasonable alternatives. As a result, an applicant must complete the environmental process before construction or improvement of the site. The FAA will not issue a license if an environmental review in accordance with all applicable regulations and guidelines is not concluded.

Policy

Under current practice, the FAA conducts a policy review of an application for a license to operate a launch site to determine whether operation of the proposed launch site would jeopardize national security, foreign policy interests, or international obligations of the United States. The FAA conducts the policy review in coordination with other federal agencies that have responsibility for national and international interests. The Department of Defense is consulted to determine whether a license application presents any issues affecting national security. The Department of State reviews an application for issues affecting foreign policy or international obligations. Other agencies, such as NASA, are consulted as appropriate. By this rulemaking, the regulations would require an applicant to supply information relevant to the FAA's policy approval, including, for example, identification of foreign ownership of the applicant. The FAA will obtain other information required for a policy review from information submitted by an applicant in other parts of the application. During a policy review, the FAA would consult with an applicant regarding any question or issues before making a final determination. An applicant would have the opportunity to address any questions before completion of the review.

B. Explosive Site Plan Review

Proposed subpart B would establish criteria and procedures for the siting of facilities at a launch site where solid and liquid propellants are to be located to prepare launch vehicles and payloads for flight. Subpart B also would establish application procedures for an applicant to demonstrate compliance with the siting criteria. The requirements in subpart B are commonly referred to as quantity-distance (Q–D) requirements because they provide minimum separation distances between explosive hazard facilities, surrounding facilities and locations where the public may be present on the basis of the type and quantity of explosive material to be located within the area. Minimum prescribed separation distances are necessary to protect the public from explosive hazards on a launch site so that the effects of an explosion does not reach the public.

An applicant would provide the FAA an explosive site plan that demonstrates compliance with the proposed Q–D requirements. the FAA must approve this plan, so applicants are cautioned not to begin construction of facilities requiring an explosives site plan until obtaining FAA approval. Note also that the proposed Q–D requirements do not address any toxic hazards. Toxic hazards may be mitigated through procedural means, and the FAA will address toxic hazards in a separate rulemaking. If a toxic hazard is a controlling factor in siting, it should be considered along with the explosives hazards when the site plan is prepared.

The FAA proposes to adopt the explosive safety practice in use at federal launch ranges today, namely, the application of quantity-distance criteria. Prescribed distances provide for a separation of an explosive source from people and property that may otherwise be exposed to explosive events. These criteria have long been used to mitigate explosive hazards to an acceptable level. Q–D criteria address only the consequences. The underlying assumption of quantity-distance criteria is that an accidental explosion will occur for any explosive material operation.

The quantity-distance criteria in the proposed regulations are a critical mitigation measure required in a launch site operator application to provide the public protection from ground operations at a launch site. The proposed rules have other mitigation measures, including launch site operator responsibilities that address accident prevention measures, and procedural requirements to protect visitors and other launch site customers on the launch site. Any other procedural requirements necessary to protect the public from explosive hazards will be the responsibility of a launch operator under a launch license. The scope of a launch license encompasses ground activities, including the explosive operations involved with the handling and assembly of launch vehicles at a launch site.

The requirement to submit an explosive site plan to the FAA would not apply to an applicant applying for a license to operate a launch site at a federal launch range. Federal launch ranges have separate rules which are either identical or similar to the rules proposed, or permit mitigation measures which otherwise ensure safety.

What follows is a discussion of launch site explosive hazards, the reason the FAA is proposing explosive siting criteria, current Q–D standards, the FAA's proposed use of NASA and DOD Q–D standards, other approaches to explosive safety, application of ATF, DOD or NASA standards, future changes in liquid propellant requirements, and solid and liquid bi-propellants at launch pads.

Explosive Hazards on a Launch Site

The hazards associated with launch vehicle pre-flight operations involving large quantities of propellants may typically be broken down into phases, including storage, handling, assembly, checkout, ordnance installation, propellant loading, and final launch preparations. Each of these are covered below, for liquid and solid propellants.

During storage, liquid propellant hazards include leaking or ruptured propellant tanks causes by loss of pressure or mechanical failure. If fuels and oxidizers are stored separately any potentially harmful event would be limited to fire or tank pressure rupture. Solid propellant hazards include accidental ordnance initiation caused by stray electrical energy or dropping a motor with sufficient impact force to initiate the propellant. Long term storage of solid rocket motors, although not within the scope of this

rulemaking,[3] presents its own unique hazards. As solid rocket motors age, chemical changes in the binder within the motor cause ammonium perchlorate to form on the outside of the motor. This is a hazardous condition. The shelf life of solid rocket motors can be extended by a carefully controlled environment in the storage facility.

The handling phase may include the transfer of liquid propellants from one holding tank to another. Explosive reactions may occur if fuels and oxidizers mix due to under or overpressurization, or if improper connections cause propellant tanks, transfer lines, or fittings to leak or rupture. If fuels and oxidizers are handled separately no explosive reactions should occur. Hazardous handling operations of solid rocket motors includes transporting and lifting with cranes at the launch pad or other facility. Any impact during these activities could cause propellant ignition.

During assembly, liquid propellant operations include the assembly and encapsulation of spacecraft and upper stages. Assembly and encapsulation may involve loading hypergolic propellants such as nitrogen tetroxide (N_2O_4) and hydrazine. Tank punctures, impacts caused by lifting, and over- or under-pressurization could cause fuels and oxidizers to come in contact with one another, causing fire and fragmentation hazards. This phase includes the final assembly of solid rocket motors at a launch pad or other facility. Any motor impact on the ground during these activities could cause propellant ignition.

Checkout at a launch pad may involve a number of hazards due to the presence of solid propellant and hypergolic propellant stages. Any accident causing interaction between hypergolic and solid propellants can result in fires, pressure ruptures, and propulsive flight.

During ordnance installation, inadvertent initiation of electro-explosive devices (EEDs) is possible. This does not pose a threat to the public (although it does to the vehicle and personnel) because EEDs have a small quantity of explosive and are not, by design, capable of detonating propellants.

The main hazard during propellant loading is over or under-pressurization of liquid propellant tanks, which may cause major spills of fuels and oxidizers. These events could lead to significant explosive yield, which is the energy released by an explosion.

[3] ATF regulations cover the long-term storage of explosives.

Final launch preparations, which begin just prior to flight, involve a fully fueled launch vehicle. Systems are switched to internal power, and liquid propellant systems are brought to flight pressure. A mishap here could lead to significant explosive yield. The explosive yield of a launch vehicle exploding on a launch pad is based on shock impact for solid propellants, and non-dynamic mixing of liquid propellants by, for example, the failure or interior bulkheads in the launch vehicle.

Reason for Proposing Explosive Siting Criteria

After careful consideration, the FAA decided it had to propose explosive siting criteria to protect the public from explosive hazards associated with the operation of a launch site. Although the FAA places much of the responsibility for safety of hazardous ground operations on the launch operator, the FAA believes that the siting requirements would be better addressed by a launch site operator. This is because the siting requirements will more efficiently be satisfied prior to construction of launch site facilities rather than afterwards. The FAA does not intend to duplicate or supercede existing regulatory frameworks. Although both the Bureau of Alcohol, Tobacco and Firearms (ATF) and the Occupational Safety and Health Administration (OSHA) have regulations on explosives, neither provides all the quantity-distance criteria applicable to launch site necessary to protect the public.[4]

ATF has jurisdiction over the storage of commercial explosives in order to provide for public safety. The storage requirements in 27 CFR part 55, Commerce in Explosives, include construction, separation distances, and some storage compatibility provisions. They also cover items such as licensing, records, and other administrative procedures.

Two gaps in coverage require FAA involvement, namely, the handling of explosives and the treatment of liquid bi-propellants. In the first instance, ATF regulations are limited to storage, not the use or handling of an explosive. Many of the activities that occur on a launch site will not constitute storage. These activities include moving or handling solid rocket motors and other ordnance for the purpose of preparing a launch vehicle for flight, and the build-up and checkout of a launch vehicle on a launch pad. The FAA's proposed regulations are required to ensure the safety of the public from these activities. Additionally, ATF regulations only address solid explosives and liquid mono-propellants. Large quantities of liquid by-propellants are often used on existing launch sites, and many of these bi-propellants pose an explosive hazard to the public. The FAA is proposing rules to ensure the safe use and storage of liquid bi-propellants.

[4] Another agency, the Research and Special Programs Administration (RSPA), DOT, has regulations for the commercial shipment of explosives (and other hazardous material) by rail, motor vehicle, cargo aircraft and ship within the United States. The regulations are found in Title 49 of the Code of Federal Regulations.

OSHA explosives requirements are contained in 29 CFR 1910.109, Explosives and Blasting Agents. These requirements apply to the manufacture, keeping, having, storage, sale, transportation, and use of explosives, blasting agents and pyrotechnics. OSHA regulations do not address public safety. For example, 29 CFR 1910.109 only includes Q–D requirements for the separation of magazines from each other. OSHA requirements do not address public areas such as inhabited buildings, passenger railways, and public highways. The FAA believes Q–D requirements that adequately separate the public from the effects of an explosion are necessary to protect the public.

The FAA recognizes that procedural measures may also be employed to achieve explosive safety. For example, if two customers of a launch site operator intend to conduct explosive handling operations in adjacent facilities that are not sited for public area distances, a launch site operator may schedule their operations at different times and keep one facility vacant to maintain safety. A licensee who proposed such measures as a substitute for the siting criteria proposed in this rulemaking would have to anticipate license terms and conditions that achieve an equivalent level for safety.

Current Q–D Standards

Current standards effectively mitigate explosive hazards on federal launch ranges. The FAA, therefore, studied these standards in order to adopt the most relevant parts in its proposed Q–D standards. DOD, NASA, and, for storage, AFT, have explosive standards designed to protect the public.

The DOD standard, ''DOD STD 6055.9, DOD Ammunition and Explosives Safety Standards,'' (Aug. 1997), is the standard used for explosive siting on DOD launch sites and for commercial launch sites located on DOD property. DOD 6055.9–STD defines general explosive safety criteria for use throughout the DOD, and

establishes protection criteria for personnel and assets such as facilities, equipment, and munitions. The DOD standard provides quantity-distance criteria to protect against overpressure and fragments, and permissible exposure levels to protect against thermal hazards.

The Q–D criteria in DOD STD 6055.90 constitute a refinement of the American Table of Distances (ATD), originally published in 1910 by the Institute of Makers of Explosives. Authors of the ATD criteria acknowledged very early that listed separation distances do not provide absolute safety. The magnitude of the hazard is simply mitigated to a level the ATD authors deemed to be acceptable. Because of this, the FAA encourages license applicants to use greater distances where practicable.

DOD STD 6055.9 also provides information relating to the construction and siting of facilities that are potential explosive sites or that may be exposed to the damaging effects of explosions. The effects of potential explosions may be altered significantly by construction features that limit the amount of explosives involved, attenuate resultant blast overpressure or thermal radiation, and reduce the quantity and range of hazardous fragments and debris. DOD also includes additional criteria for electrical safety and lightning.

ATF also adopted the ATD in its approach to facility siting. ATF regulations provide procedural and substantive requirements regarding, in relevant part, the issuance of user permits and the storage of explosive materials. AFT specifies tables of distances for high explosives, low explosives, and blasting agents. The tables governing high explosives and low explosives are very pertinent to launch site operations.

As noted, the scope of operations within a launch site goes beyond the on-site receipt, transfer and storage of explosives within ATF jurisdiction. A launch site may have a number of launch vehicle and payload customers on site who posses liquid and solid propellants that are being used for incorporation into a launch vehicle or payload.

NASA's safety standards and policy for operations involving explosives are contained in ''Safety Standard for Explosives, Propellants, and Pyrotechnics,'' NSS 1740.12 (Aug. 12, 1993) (NASA Standard). This document contains a uniform set of standards for all NASA facilities engaged in the development, manufacture, handling, storage, transportation, processing, or testing of explosives. Like the DOD standard, the NASA standard contains guidelines and standards for explosives operations in order to safeguard not only the public, but personnel and property. It covers not only Q-D criteria, but personnel training, operating procedures, and other policies such as the use of all available advances in protective construction to provide the safety work environment to prevent or minimize the exposure of personnel and facilities to explosives hazards when performing NASA program activities.

FAA's Proposed Use of NASA and DOD Q-D Standards for Licensed Operation of a Launch Site

Because the NASA and DOD standards are similar, and because both the NASA and DOD standards comprehensively cover explosive hazards at a launch site, the FAA has used both as a guide in proposing the rules in subpart B. However, the FAA proposes to employ the tables and many of the definitions of the NASA standard specifically.

The relevant differences for solid explosives between NASA, DOD, and ATF are not significant. The NASA and ATF table for division 1.3 explosives (discussed below) are identical except that ATF requirements stop at 300,000 pounds. The NASA division 1.3 table is also the same as the DOD standard except that the DOD standard has more increments.

The relevant differences for liquid propellants between the NASA and DOD standards are also minor.[5] The hazard groups that liquid propellants fall into, discussed below, are identical in the two standards. The values in the table used for explosive equivalents are also identical for quantities greater than 35,000 pounds. A discrepancy exists under 35,000 pounds because the DOD requirement is based on a table used for division 1.1 solid explosives.[6] The distance specified below 35,000 pounds in the DOD table is based on the ranges of hazardous fragments and firebrands from an explosion. This is appropriate for solid explosives but is not necessary for liquid propellant explosive equivalents. The NASA standard, on the other hand, has separate tables for division 1.1 solid explosives and liquid propellant explosive equivalents. The NASA table for division 1.1 solid explosives takes fragments and firebrands into account, as appropriate. NASA's table for liquid propellants does not take fragmentation into account.

Other Approaches to Explosive Safety

The FAA has taken a number of measures in order to simplify the proposed Q-D standards. The proposed requirements do not account for the use of hardening or barricades, or for any other solid propellant other than division 1.3. The proposed rules also reflect that only two liquid propellant compatibility groups are necessary. These are discussed below.

The proposed requirements do not account for hardening. Both NASA and DOD have standards for using protective construction to harden an explosive hazard facility to suppress explosion effects, and to harden an area potentially exposed to explosive hazards. In the NASA and DOD standards, the use of hardening may reduce the required distance between an explosive hazard facility and a public area. The proposed rules do not explicitly address hardening. The distances required between explosive hazard facilities and public areas assume that neither the explosive hazard facilities nor the public areas are hardened. Because of the complexity of hardening standards, the FAA believes hardening is better left to case-by-case approval. If an applicant plans to use hardening, the applicant should plan on demonstrating an equivalent level of safety to justify a reduction in applicable Q-D requirements.

Similarly, the proposed requirements do not account for the use of barricades and other protective measures to mitigate the effect of an explosion on exposed areas. An applicant proposing to use such measures in order to deviate from the proposed siting rules may apply for a waiver to the FAA, accompanied with a demonstration that the applicant achieves an equivalent level of safety.

The proposed requirements govern only one type of solid explosive, division 1.3. To classify solid propellants, the FAA is proposing to adopt the United Nations Organization (UNO) classification system for transport of dangerous goods. This classification system is reflected in DOD and NASA standards, and standards of the Department of Transportation's Research and Special Programs Administration. Propellants will be assigned the appropriate DOT class in accordance with 49 CFR part 173. The hazard classification system used by all three agencies consists of nine classes for dangerous goods with ammunition and explosives included in UNO ''Class 1, Explosives.'' Class 1 explosives are

[5] ATF does not regulate liquid propellants, other than mono-propellants.

[6] Solid explosives, like liquid explosives, may be measured in terms of explosive equivalency. The explosive equivalency of a certain weight of solid explosive is the weight of trinitrotoluene that would provide an equivalent blast effect.

further subdivided into ''divisions'' based on the character and predominance of the associated hazards and on the potential for causing casualties or property damage. As defined in 49 CFR 173.50:

- *Division 1.1*—consists of explosives that have a mass explosion hazard. A mass explosion is one which affects almost the entire load instantaneously.
- *Division 1.2*—consists of explosives that have a projection hazard but not a mass explosion hazard.
- *Division 1.3*—consists of explosives that have a fire hazard and either a minor blast hazard or a minor projection hazard or both, but not a mass explosion hazard.
- *Division 1.4*—consists of explosives that present a minor explosion hazard.
- *Division 1.5*—consists of very insensitive explosives.
- *Division 1.6*—consists of extremely insensitive articles which do not have a mass explosion hazard.

The FAA proposes criteria only for division 1.3. The only solid explosives for commercial launches that will likely affect separation distances on a launch site are division 1.3 propellants. Although launch vehicles frequently have components incorporating division 1.1 explosives, such as those used to initiate flight termination systems, the quantity is small. Division 1.1 explosives will not likely be present in sufficient quantities to affect the application of Q–D criteria. The only division 1.1 solid rocket motors existing today are from old military missiles which are not likely to be used at a commercial launch site. When liquid fuels and oxidizers are located together, as they would be during a fueling test, the combination has an explosive potential equal to a percentage of division 1.1 explosives. The proposed rules take such activities into account, but address liquid propellants separately from solid propellants.

The proposed regulations would not assign compatibility groups for solid propellants. The NASA and DOD standards assign solid explosives to compatibility groups. Explosives are assigned to the same group when they can be stored together without significantly increasing either the probability of an accident or, for a given quantity, the magnitude of the effects of such an accident. Because division 1.3 solid propellants are all compatible, the proposed regulations do not incorporate compatibility groups for solid propellants.

Like the DOD and NASA standards, the proposed rules classify each liquid propellant into one hazard group and one compatibility group. Classifying each liquid propellant into a hazard group is necessary because the hazards associated with different liquid propellants vary widely, and the quantity-distance relationship varies accordingly. Hazard group 1 individually represents a fire hazard, hazard group 2 individually represents a more serious fire hazard, and hazard group 3 individually represents a fragmentation hazard because propellants in this category can cause rupture of a storage container.

The proposed rules classify current launch vehicle liquid propellants, namely, liquid hydrogen (LH2), RP–1, hydrazine (N2H4) and its variants (e.g. UDMH and Aerozine–50), hydrogen peroxide, liquid oxygen (LO2), and nitrogen tetroxide (N2O4). RP–1 and N2O4 fall into hazard group 1, hydrogen peroxide and LO2 fall into hazard group 2, and LH2 and N2H4 fall into hazard group 3. Other propellants will be classified on a case-by-case basis.

Like the NASA and DOD standards, the proposed rules also assign each liquid propellant into a compatibility group. However, unlike those standards which cover many different types of propellants, only two compatibility groups are represented in the proposed rules, group A and group C. Group A represents oxidizers, such as LO2, N2O4, and hydrogen peroxide, and group C represents fuels. Whenever propellants of different compatibility groups are not separated by the minimum distance requirements, that is, when fuels and oxidizers are close enough to each other to potentially mix and explode, the explosive equivalency of the explosive mixture must be calculated.

Application of ATF, DOD, or NASA Standards

The storage of solid propellant and liquid mono-propellant on a launch site is covered by ATF regulations, and therefore not addressed in the FAA's proposed requirements. ATF has a permit process for the storage of solid propellants and liquid mono-propellants. The FAA's proposed rules, therefore, do not cover the separation distance between magazines, or between magazines and public areas. However, an applicant must show any magazines in its explosive site plan and their location in relation to other explosive hazard facilities. Applicants should note that on federal launch ranges DOD or NASA standards apply. These launch sites may have Q–D requirements that are different than the FAA's proposed rules.

Future Change in Liquid Propellant Requirements

The DOD Explosive Safety Board (DDESB) has initiated a DOD Explosive Safety Standard for Energetic Liquids Program, and has established an interagency advisory board called the Liquid Propellants Working Group (LPWG). The FAA is a member of this group. A number of possible inconsistencies and irregularities have been identified in the current approach to siting liquid propellants. These include Q–D criteria for most liquid propellants, possible inconsistencies in hazard group and compatibility group definitions, and possible inaccurate characterization of blast over pressure hazards of liquid propellant explosions. The purpose of the LPWG is to address issues of explosive equivalence, compatibility mixing, and quantity-distance criteria, and to develop recommended revisions to DOD STD 6055.9 addressing liquid propellants and other liquid energetic materials. The LPWG is currently consolidating all available test and accident data, and non-DOD regulatory information to provide a basis for the revisions.

Because the DDESB is possibly the best equipped group in the country to address these issues, the FAA will carefully consider its recommendations. The basic approach outlined in the proposed rule should not change. However, the DDESB is likely to specify new hazard and compatibility groups, distance values, and equivalency values, and the public may anticipate their eventual consideration and possible adoption by the FAA.

Solid and Liquid Bi-propellants at Launch Pads

The FAA is proposing a special requirement at launch pads for launch vehicles that use liquid bi-propellant and solid propellant components. The required separation distance shall be the greater of the distance determined by the explosive equivalent of the liquid propellant alone or the solid propellant alone. An applicant does not have to add the separation distances of both. This notice assumes that generally, no credible scenario exists that could produce a simultaneous explosion reaction of both liquid propellant tanks and solid propellant motors. Although not reflected in the published DOD and NASA standards, the proposed requirement constitutes current practice at federal launch ranges. The FAA is interested in the public's view on this approach.

C. Explosive Mishap Prevention Measures

Application of the proposed quantity-distance rules alone will not prevent mishaps from occurring on a launch site. The proposed Q–D rules merely reduce the risk to the public to an acceptable level if a mishap occurs, and if the public is kept away from the mishap by a distance that is at least as great as the public area distance. Safe facility design and prudent procedural measure are critical to preventing a mishap from occurring in the first place. Because visitors to a launch site cannot be protected by prudent site planning alone, the FAA has proposed launch site operator responsibilities to prevent mishaps involving propellants.

The FAA considered measures taken at federal launch ranges to prevent inadvertent initiation of propellants. For this notice the FAA focused on those measures that are appropriate to be taken by a launch site operator. For the most part, the FAA considers it prudent to place the responsibility on a launch site operator for those measures that must be built into facilities. Requirements of a more operational nature will be covered in another rulemaking.

The FAA focused on construction measures intended to prevent inadvertent initiation of propellant from electricity. These are particularly important for electro-explosive devices. Electric hazards include electrostatic discharge such as lightning, static electricity, electric supply systems, and electromagnetic radiation. As discussed below, the FAA is proposing launch site operator requirements for two of these electric hazards: Lightning and electric supply systems. Other measures were considered but rejected because the FAA's planned rulemaking on launches from non-federal launch sites will cover other procedural measures to guard against inadvertent initiation of propellants from electricity. Moreover, the FAA believes launch and launch site operators will implement prudent design and construction measures to comply with local, state, and other federal law, such as OSHA requirements. The FAA is interested in public views on this approach and any need to address other facility requirements.

Lighting Protection

Rocket motors may be energized to dangerous levels by lightning. The primary method of protecting against damage from lightning is to provide a means to direct a lightning discharge directly to the earth without causing harm to people or property. A lightning protection system consists of a system of air terminals such as lightning rods, a system of ground terminals, and a conductor system connecting the air terminals to the ground terminals. These systems are typically installed during construction.

The FAA proposes to impose certain requirements on launch site operators involving lightning protection. The requirements are based on current industry practice, namely, DOD STD 6055.9, chapter 7, and the NASA standard's chapter 5. Each of those standards define, in detail, minimum explosives safety criteria for the design, maintenance, testing and inspection of lightning protection systems. The FAA's proposed rules are not as detailed as those standards so that an applicant may have more flexibility in meeting performance standards. The FAA expects applicants to achieve the level of safety represented by the DOD and NASA standard.

The FAA's proposed rules were derived from the DOD and NASA standards, which are similar to each other. Like NASA and DOD, the proposed rules require lightning protection for all explosives hazard facilities. The design of lightning protection systems includes air terminals, low impedance paths to the ground, referred to as down conductors, and earth electrode systems. An air terminal is a component of a lightning protection system that is able to safely intercept lightning strikes. Air terminals may include overhead wires or grids, vertical spikes, or a building's grounded structural elements. Air terminals must be capable of safely conducting a lighting strike. Down conductors, such as wires or structural elements having high current capacity, provide low impedance paths from the air terminals described above to an earth ground system. Earth electrode systems dissipate the current from a lightning strike to ground.

Bonding and surge protection are other important considerations for lightning protection systems. Metallic bodies, such as fences and railroad tracks near an explosive hazard facility, should be bonded to ensure that voltage potentials due to lightning are equal everywhere in the explosive hazard facility. Lightning protection systems should also include surge protection for all incoming conductors, such as metallic power, communication, and instrumentation lines coming into an explosive hazard facility, so as to reduce transient voltages due to lightning to a harmless level.

The FAA proposes to adopt a provision of DOD STD 6055.9 that exempts the need for a lightning protection system when a local lightning warning system is used to permit operations to be terminated before the incidence of an electrical storm, if all personnel can and will be provided with protection equivalent to a public traffic route distance, which is equivalent to the FAA's proposed public area distance. The FAA is interested in views on this exception, and whether it is sensible in light of the small chance that lightning may cause inadvertent solid rocket motor flight. The FAA is also interested in views on whether other exceptions should be added.

The National Fire Protection Association (NFPA), Batterymarch Park, Quincy, Massachusetts, has published a Lightning Protection Code, NFPA 780 (1995). The FAA is interested in the public's views on the use and applicability of this code.

Static Electricity

Rocket motors may be energized to dangerous levels by extraneous electricity such as static electricity, fields around electric supply lines, and radio frequency emissions from radio, radar, and television transmitters.

Static electricity is generally created by a transfer of electrons from one substance to another caused by friction or rubbing. The generation of static electricity is not in itself a hazard. The hazard arises when static electricity is allowed to accumulate, subsequently discharging as a spark across an air gap in the presence of highly flammable materials or energetic materials such as propellants. The NASA standard states that:

> In order for static to be a source of ignition, five conditions must be fulfilled: (1) A mechanism for generating static electricity must be present, (2) a means of accumulating or storing the charge so generated must exist, (3) a suitable gap across which the spark can develop must be present, (4) a voltage difference sufficient to cause electrical breakdown or dielectric breakdown must develop across the gap, and (5) a sufficient amount of energy must be present in the spark to exceed the minimum ignition energy requirements of the flammable mixture.[7]

Electro-explosive devices are particularly susceptible to static discharge. The primary method used to neutralize static potential is to create an electrical path between the objects so that the potential charges will be equalized. This path can be generated by bonding potential charged objects to each other and humidifying or ionizing

[7] NASA Standard at 5–29.

the air to create a path for the charge to bleed off.

Both NASA and DOD have standards to control static electricity. For example, they have standards[8] to prevent static electricity accumulations that are capable of initiating combustible dusts, gases, flammable vapors, or exposed electroexplosive devices. The standards build on the National Electrical Code, published by the National Fire Protection Association as NFPA 70, which establishes standards for the design and installation of electrical equipment and wiring in hazardous locations containing combustible dusts, flammable vapors and gases.

These standards require personnel and equipment in hazardous locations and locations where static sensitive EEDs are exposed to be grounded in a manner to effectively discharge static electricity. For example, the NASA standard requires personnel to wear static dissipation devices such as legstats and wriststats. Conductive shoes are required when handling, installing, or connecting or disconnecting EEDs.

Solid rocket motors may also be initiated by static electricity. Material contact, specifically, the rubbing or removing of one material from another, such as removing tooling from a motor, can produce a static charge buildup in solid rocket motors. This energy, when released under appropriate conditions, may lead to a cascade discharge and propellant ignition. A number of incidents have occurred due to static electricity, including a Pershing II missile burn in West Germany, a Stage I Peacekeeper missile initiation at a manufacturing facility (due to the pulling of a tool), and a Minuteman State II missile ignition on the rapid pulling of the core.[9]

Although the control of static electricity is important for public safety, the FAA is not proposing any requirements in this rulemaking. The FAA believes that the control of static electricity in launch operations is primarily procedural in nature, and is best covered by the FAA in a future rulemaking on launches. The FAA is interested in the public's view on whether requirements should be placed on launch site operators.

Electric Supply Systems

As noted above, rocket motors may be energized to dangerous levels by extraneous electricity such as fields around high tension wires. Both the NASA standard, chapter 5, and DOD STD 6055.9, chapter 6, have similar standards to address the hazards from fields around high tension wires.

The FAA proposes rules that are similar to both the NASA and DOD standard. As in those standards, the proposed rules require electric power lines to be no closer to an explosive hazard facility than the length of the lines between the poles or towers that support the lines, unless effective means is provided to ensure that energized lines cannot, on breaking, come in contact with the explosive hazard facility. The proposed rules also require towers or poles supporting electric distribution lines that carry between 15 and 69 KV, or electrical transmission lines that carry 69 KV or more, to be no closer to an explosive hazard facility than the public area distance for that explosive hazard facility.

Electromagnetic Radiation

Rocket motors may be energized to dangerous levels by extraneous electricity such as radio frequency emissions from radio, radar, and television transmitters. Radio frequency (RF) emitters may present a hazard to the public by direct exposure to high levels of RF energy. The levels of RF energy that are hazardous are dependent on frequency. For instance, ''ANSI C95.1–1991 Electromagnetic Fields, Safety Levels With Respect to Human Exposure to Radio Frequency'' defines the maximum safe level for personnel for frequencies between 0.003 and 0.1 MHz at 100mWcm^2, and a level of 180 mW/Cm^2 for frequencies between 1.34 and 3.0 MHz. More importantly for this proposal, RF emitters may present hazard to ordnance. At launch sites today, design and procedural methods are used to mitigate risks to personnel and ordnance. Separation distances are also used to ensure personnel and ordancne are not exposed to hazardous levels.

One hazard of particular importance on a launch site is the accidental firing of electroexplosvie devices by stray electromagnetic energy. A large number of these devices are initiated by low levels of electrical energy and are susceptible to unintentional ignition by many forms of direct or induced stray electrical energy, such as from lightning discharges, static electricity, and radio frequency due to ground and airborne emitters.

One federal launch site operator, the U.S. Air Force, defines its RF requirements in ''Air Force Manual (AFM) 91–201, Explosives Safety Standards,'' (Jan. 1998). Safe separation distance criteria are contained in section 2.58. A table is provided that gives minimum separation distances between EEDs (within explosive hazard facilities) and the transmitting antenna of all RF emitters. The distances are based on the frequency, transmitter power, and power ratio of the transmitting antenna. For worst-case situations, safe separation distances are based on frequency and effective radiated power. ''Worst-case'' is defined as EEDs that are the most sensitive in the Air Force inventory, unshielded, having leads or circuitry which could inadvertently be formed into a resonant dipole, loop or other antenna. Where EEDs are in less hazardous configurations, the standard allows for shorter distances. The standard also allows for the conduct of power density surveys to ensure safety, in lieu of using the minimum safe separation distances defined from the table and figure. Power density surveys measure the actual conditions in an area here EEDs may be located, and are appropriate when the minimum distances cannot be complied with, for whatever reason, and when more than one transmitter is operating in a certain area at different frequencies.

The FAA has not chosen to specifically address RF hazards in this proposal. OSHA covers direct exposure of personnel to RF.[10] Although the FAA is not aware of any other federal regulations that specifically protect the public from the accidental firing of electroexplosive devices by stray electromagnetic energy, the FAA with this proposal is focussing on those measures that a launch site operator must build into its facilities. The distance requirements discussed above were considered by the FAA but other procedural means exist to mitigate RF hazards, including the FAA's proposed scheduling and coordination requirement for launch site operators. The procedural requirements of launch operators, covered in a separate rulemaking, in conjunction with the requirement in proposed § 420.5 for a licensee to develop and implement procedures to coordinate operations carried out by launch site customers and their contractors, should prove adequate to address RF hazards. The FAA is interested in the public's view on whether other requirements, such as distance requirements, should be placed on launch site operators.

D. Launch Site Location Review

The FAA intends a launch site location review to determine whether the location of a proposed launch site

[8] DOD Standard, chapter 6, NASA Standard, chapter 5.

[9] ''JANNAF Propulsion Systems Hazards Subcommittee Electrostatic Discharge Panel Report,'' CPIA Publication 510 (Mar. 1989).

[10] 29 CFR 1910.97.

would jeopardize public health and safety. To that end, the FAA proposes to determine whether at least one hypothetical launch could take place safely from a launch point at the proposed site. The FAA does not intend to license the operation of a launch site from which a launch could never safely take place. An applicant should, however, bear in mind that an FAA license to operate a launch site does not guarantee that a launch license would be issued for any particular launch proposed from that site. Accordingly, much of the decision making with respect to whether a particular site will be economically successful will rest, as it should, with a launch site operator, who will have to determine whether the site possesses sufficient flight corridors for economic viability. The FAA seeks through a location review only to ensure that at least one flight corridor exists that may be used safely for a hypothetical launch.

Accordingly, prior to issuing a license to operate a launch site at the proposed location, the FAA will ascertain whether it is possible to launch at least one type of launch vehicle on at least one trajectory from each launch point at the proposed site while meeting the FAA's collective risk criteria. The FAA wants to ensure that there exists at least one flight corridor or set of impact dispersion areas from a proposed launch site that would contain debris away from population. Launch is a dangerous activity that the FAA will allow to occur only when the risk to people is below an expected casualty (E_c) of 30×10^{-6}. In other words, if there are too many people around a launch site or in a flight corridor the FAA will not license the site. The FAA's proposed methods for determining flight corridors and impact dispersion areas and estimating E_c are designed to ascertain whether a hypothetical flight corridor would avoid creating too much risk.

All this is not to say that the FAA proposed to require an applicant for a license to operate a launch site to perform a complete flight safety analysis for a particular launch. The FAA recognizes that an applicant may or may not yet have customers or a particular launch vehicle in mind. Accordingly, the FAA's proposed launch site location review methods only approximate, on the basis of certain assumptions and recognizing that not all factors need to be taken into account, a full flight safety analysis that would be normally be performed for an actual launch. Of course, if an applicant does have a customer who satisfies the FAA's flight safety criteria for launch and obtains a license for launch from the site, that showing would also demonstrate to the FAA that a launch may occur safely from the proposed site, and the FAA could issue a license to operate the launch site on the basis of the actual launch proposed.

Bear in mind also that the focus of FAA's proposed launch site location review methods is on expendable launch vehicles with a flight history. The reusable launch vehicles (RLV) currently proposed by industry vary quite a bit. Accordingly, the FAA considered it unwise to define a detailed analytical method for determining the suitability of a launch site location for RLVs. An applicant proposed a launch site limited to the launch of reusable launch vehicles would still need to define a flight corridor and conduct a risk analysis if population were present within the flight corridor, but the FAA will review such an analysis on a case-by-case basis consistent with the principles discussed in this rulemaking.

Similarly, the FAA has chosen not to define a detailed analytical method for determining the suitability of a launch site location for unproven launch vehicles. An applicant proposing a launch site limited to the launch of unproven launch vehicles would have to demonstrate to the FAA that the launch site is safe for the activity planned.

A launch site location review would provide an applicant with alternative methods for demonstrating that a proposed launch site satisfies FAA safety requirements. Specifically, the applicant must demonstrate that a flight corridor or set of impact dispersion areas exist that do not encompass populated areas or that do not give rise to an E_c risk of greater than 30×10^{-6}. Each proposed launch point must be evaluated for each type of launch vehicle, whether expendable orbital, guided sub-orbital or unguided sub-orbital, or reusable, that an applicant proposes would be launched from each point.

Each of the three methods the FAA proposes for evaluating the acceptability of a launch site's location require an applicant to identify an area, whether a flight corridor or a set of impact dispersion areas, emanating from a proposed launch site. That area identifies the public that the applicant must analyze for risk of impact and harm. The FAA proposes to have an applicant who anticipates customers who use guided orbital launch vehicles define a flight corridor for a class of vehicles launched from a specific point along a specified trajectory, that extends 5,000 nautical miles from the launch point or until the launch vehicle's instantaneous impact point leaves the earth's surface, whichever is sooner. For guided sub-orbital launch vehicles, the flight corridor would end at an impact dispersion area of a final stage. An applicant would have to demonstrate either that there are no populated areas within the flight corridor or that the risk to any population in the corridor does not exceed the FAA's risk criteria. Similarly, for the sub-orbital launch of an unguided vehicle, an applicant would analyze the risks associated with a series of impact dispersion areas around the impact points for spent stages. If there are people in the dispersion areas, the applicant must demonstrate that the expected casualties from stage impacts do not exceed the FAA's risk criteria.

E_c, or casualty expectancy, represents the FAA's measure of the collective risk to a population exposed to the launch of a launch vehicle. The measure represents the expected average number of casualties for a specific launch mission. In other words, if there were thousands of the same mission conducted and all the casualties were added up and the sum divided by the number of missions, the answer and the mission's expected casualty should statistically be the same. This E_c value defines the acceptable collective risk associated with a hypothetical launch from a launch point at a launch site, and, as prescribed by the proposed regulations, shall not exceed an expected average number of casualties of 0.00003 (30×10^{-6}) for each launch point at an applicant's proposed launch site. This E_c value defines acceptable collective risk. In contrast to individual risk, which describes the probability of serious injury or death to a single person, the launch industry's common measure of risk is collective risk. The E_c value proposed originated with the Air Force's measure of acceptable risk. ''EWR 127–1,'' Sec. 1.4, 1–12. Relying on the Air Force measure, the FAA proposed the adoption of collective risk and a risk level of 30×10^{-6} for licensed launches in an earlier proceeding. ''Commercial Space Transportation Licensing Regulations,'' (62 FR 13216, 13229–30 (Mar. 19, 1997). The FAA now proposes to use the same measure for evaluating the suitability of a proposed launch site location.

Collective risk reflects the probability of injury or death to all members of a defined population set—in this case, those located within the flight corridor or set of impact dispersion areas being analyzed—placed at risk by a launch event. Collective risk constitutes the sum total launch related risk, that is, the

probability of injury or death, to that part of the public exposed to a launch. Collective risk is analogous to an estimate of the average number of people hit by lightning each year, while individual annual risk would be an individual's likelihood of being hit by lightning in any given year. Collective risk may be expressed in terms of individual risk if certain factors associated with any given launch are taken into account. Collective risk may be expressed in terms of individual risk when the exposed population consists of one person. Also, individual risk may be—and will be, in most instances—less than collective risk, depending on the size of the population exposed. For example, a collective E_c risk of 30×10^{-6} for a defined population of one hundred thousand people exposed to a particular launch results (assuming the risk is spread equally throughout the defined population) in a probability of injury or death to any one exposed individual of 3×10^{-10} (three per ten billion).

The FAA's proposed methods for identifying a flight corridor or impact dispersion areas distinguish between guided orbital launch vehicles with a flight termination system (FTS), guided sub-orbital launch vehicles with an FTS, and unguided sub-orbital launch vehicles without an FTS.[11] For purposes of this proposal, references to a guided launch vehicle, whether orbital or sub-orbital, may be taken to mean that the vehicle has an FTS. References to an unguided sub-orbital may be understood to mean that the vehicle does not possess an FTS.

The FAA's proposed regulations divide guided orbital launch vehicles into four classes, with each class defined by its payload weight capability, as shown in table 1. Sub-orbital launch vehicles are not divided into classes by payload weight, but are categorized as either guided or unguided. Table 2 shows the payload weight and corresponding classes of existing orbital launch vehicles. For a launch site intended for the use of orbital launch vehicles, an applicant would define a hypothetical flight corridor from a launch point at the proposed launch site for the largest launch vehicle class anticipated—which the FAA anticipates would be based on expected customers.

TABLE 1.—CLASS OF LAUNCH VEHICLES BY PAYLOAD WEIGHT

[LBS]

	Orbital launch vehicles			
100 nm orbit	Small	Medium	Medium large	Large
28° inc.[1]	≤4,400	>4,400 to ≤11,100	>11,100 to <18,500	>18,500
90° inc.[2]	≤3,300	>3,330 to ≤8,400	>8,400 to ≤15,000	>15,000

[1] 28° inclination orbit from a launch point at 28° latitude.
[1] 90° inclination orbit.

TABLE 2.—CLASSIFICATION OF COMMON GUIDED ORBITAL EXPENDABLE LAUNCH VEHICLES

Vehicle	Payload weight (lbs)	Payload weight (lbs)	Class
	100 nm Orbit 29° inc.	100 nm Orbit 90° inc.	
Conestoga 1229	600	450	Small.
Conestoga 1620	2,250	1,750	Small.
LML V–1	1,755	1,140	Small.
LML V–2	4,390	3,290	Small.
Pegasus	700	N/A	Small.
Pegasus XL	1,015	769	Small.
Scout	560	460	Small.
Taurus	3,100	2,340	Small.
Atlas II	14,500	12,150	Medium.
Atlas 2A	16,050	13,600	Medium.
Delta 6920	8,780	6,490	Medium.
Delta 7920	11,220	8,575	Medium.
Titan II	N/A	4,200	Medium.
Atlas 2AS	19,050	16,100	Medium/Large.
Titan III	31,200	N/A	Medium/Large.
Titan IV	47,400	41,000	Large.

Methods for estimating the risk posed by the operation of a launch site for guided orbital and sub-orbital launch vehicles are presented in proposed appendices A, B and C. Appendix A contains instructions for creating a flight corridor for guided orbital and sub-orbital launch vehicles. Appendix B provides an alternative method to appendix A. Appendix B also instructs an applicant how to create a flight corridor for guided launch vehicles, but provides more detailed calculations to employ so that, although an appendix B flight corridor is typically less conservative than that of appendix A, it should provide more representative of actual vehicle behavior. Appendix C

[11] This proposal does not propose a means for analyzing risks posed by a launch site for the launch of unguided suborbital launch vehicles that employ FTS. Historically, few of these vehicles have been launched. In the event an applicant for a license to operate a launch site wishes to operate a launch site only for such vehicles, the FAA will handle the request on a case by case basis. The FAA does note, however, that unguided suborbital launch vehicles that in the past have been launched with an FTS were usually launched with the FTS because the launch was otherwise too close to populated areas for the type of vehicle and trajectory flown.

contains the FAA's proposed method for applicants to analyze the risk posed by guided launch vehicles within a flight corridor created under appendix A or B. Unguided sub-orbital launch vehicles are presented in appendix D, which describes how an applicant should estimate impact dispersion areas and analyze the risk in those areas.

Appendix A is less complex, but generates a larger flight corridor, than the methodology of appendix B. No local meteorological or vehicle trajectory data are required to estimate a flight corridor under appendix A. Because it is a simpler methodology, an applicant may want to use it as a screening tool. If an applicant can define a flight corridor for a single trajectory, using appendix A, that does not overfly populated areas, the applicant may satisfy the launch site location review requirements with the least effort. If, however, the corridor includes populated areas, the applicant has the choice of creating an appendix B flight corridor, which may be more narrow, or conducting a casualty expectancy analysis. An applicant is not required to try appendix A before employing appendix B.

The FAA's proposed location review reflects a number of assumptions designed to keep the review general rather than oriented toward or addressing a particular launch. These assumptions are discussed more fully below, but may be summarized briefly. The location reviews for appendices A and B flight corridors reflect an attempt to ensure that launch failure debris would be contained within a safe area. Successful containment must assume a perfectly functioning flight termination system. A perfectly functioning flight termination system would ensure that any debris created by a launch failure would be contained within a flight corridor. When the high risk event is not launch failure but launch success, as tends to be the case with an unguided sub-orbital launch vehicle that does not employ an FTS, the FAA still proposes a location review based on an assumption of containment.

The approaches provided in the four proposed location review appendices are based on some comment assumptions that reflect limitations of the launch site location review analysis. The FAA is not requiring an application to analyze the risks posed to the public by toxic materials that might be handled at the proposed site, nor the risk to ships or aircraft from launch debris or planned jettisoning of stages. The FAA recognizes that these assumptions represent a limitation in the launch site location review. The FAA intends that these three risks will be dealt with through pre-launch operational controls and launch commit criteria which will be better identified as part of a launch license review. All launches that take place from an approved U.S. launch site will either be regulated by the FAA through a launch license or will be U.S. government launches that the government carries out for the government.

The two methods for creating guided launch vehicle flight corridors are intended to account for launch vehicle failure rate, malfunction turn capability, and the launch vehicle guidance accuracy as defined by the impact dispersions of these vehicles. The premise undergirding each of these proposed methods is that debris would be contained within the defined flight corridor or impact dispersion areas. Accordingly, for purposes of a launch site location review, only the populations within the defined areas need to be analyzed for risk. The FAA recognizes that were a flight termination system fail to destroy a vehicle as intended, a launch vehicle could stray outside its planned flight corridor. That concern will be better accommodated through another forum, namely, the licensing of a launch operator and the review of that launch operator's flight safety system. Because a containment analysis only looks at how far debris would travel in the event an errant vehicle were destroyed, the containment analysis has to assume a perfectly functioning flight termination system. In other words, for purposes of analyzing the acceptability of a launch site's location for launching guided expendable launch vehicles, the FAA will assume that a malfunctioning vehicle will be destroyed and debris will always impact within acceptable boundaries. Accordingly, the FAA does not propose to explore, for purposes of determining the acceptability of a launch site's location, the possibility that a vehicle's flight termination system may fail and that the vehicle could continue to travel toward populated areas. Any proposed site may present such risks—indeed, any proposed launch presents such risks—but they are best addressed in the context of individual launch systems. This working assumption of a perfectly reliable flight termination system will not, of course, apply to the licensing of a launch of a launch vehicle. The FAA will consider the reliability of any particular launch vehicle's FTS in the course of a launch license review. From a practical standpoint, this means that for the launch site location review, both nominal and failure-produced debris would be contained within a flight corridor, obviating the need for risk analyses that address risk outside of a defined flight corridor or set of impact dispersion areas.

Additionally, the FAA does not propose to require an applicant to analyze separately the risks posed by the planned impact of normally jettisoned stages from a guided expendable launch vehicle, except for the final stage of a guided sub-orbital launch vehicle. The FAA does not consider intermediate stage impact analysis necessary to assess the general suitability of a launch point for guided expendable launch vehicles because the impact location of stages is inherently launch vehicle-specific, and the trajectory and timing for a guided launch vehicle can normally be designed so that the risks from nominally jettisoned stages will be kept to acceptable levels. A launch license review will have to ensure that vehicle stages are not going to impact in densely populated areas. Risk calculations performed for launches from federal launch ranges demonstrate a relatively low risk posed by controlled disposition of stages in comparison to the risk posed by wide-spread dispersion of debris due to vehicle failure.

Each of the FAA's proposed approaches to defining flight corridors or impact dispersion areas is designed to analyze the highest risk launch event associated with a particular vehicle technology. This is not meant to imply that lower risk launch events are necessarily acceptable; only that they will not be considered in the course of this review. For a guided orbital launch vehicle, that event is vehicle failure. For an unguided sub-orbital launch vehicle, the launch event of highest risk is vehicle success, namely, the predicted impact of stages. For a guided launch vehicle the overflight risk, which results from a vehicle failure followed by its destruction (assuming no FTS failure), is the dominant risk. Risks from nominally jettisoned debris are subsumed in the overflight risk assessment. For an unguided sub-orbital launch vehicle, the FAA proposes that risk due to stage impact be analyzed instead of the overflight risk. This distinction is necessitated by the fact that the failure rate during thrust is historically significantly lower for unguided vehicles than for guided vehicles. Current unguided launch vehicles with many years of use are highly reliable. They do not employ an FTS; therefore, debris pieces usually consist of vehicle components that are not broken up. Another reason for the

difference between analyses is that unguided vehicle stage impact dispersions are significantly larger than guided vehicle impact dispersions. These differences add up to greater risk within an unguided launch vehicle stage impact dispersion area than the areas outside the dispersion areas. Therefore, a risk assessment is only performed on those populations within an unguided launch vehicle stage impact dispersion area.

An applicant must define an area called an overflight exclusion zone (OEZ) around each launch point, and the applicant must demonstrate that the OEZ can be clear of the public during a launch. An OEZ defines the area where the public risk criteria of 30×10^{-6} would be exceeded if one person were present in the open. The overflight exclusion zone was estimated from risk computations for each launch vehicle type and class. An applicant must define an OEZ because launch vehicle range rates are slow in the launch area, launch vehicle effective casualty areas, the area within which all casualties are assumed to occur through exposure to debris, are large, and impact dispersion areas are dense with debris so that the presence of one person inside this hazardous area is expected to produce E_c values exceeding the public risk criteria. Accordingly, an applicant would either have to own the property, demonstrate to the FAA that there are times when people are not present, or that it could clear the public from the overflight exclusion zone prior to a launch. Evacuating an overflight exclusion zone for an inland site, might, for example, require an applicant to demonstrate that agreements have been reached with local officials to close any public roads during a launch. The FAA seeks comments on the feasibility of evacuating areas inland and on the impact of the OEZ requirement on the ability to gain a license for an inland site.

E. License Conditions

A license may contain conditions flowing from the various reviews conducted during the application process. For example, a license granted following approval of a launch site location would be limited to the launch points analyzed, and the type and class of vehicle used in the demonstration of site location safety. An applicant may choose to analyze all three types of launch vehicles in its application. An FAA launch site operator license authorizing the operation of a launch site for launch of an orbital expendable launch vehicle would allow the launch of vehicles from the site that were less than or equal to the class of launch vehicle, based on payload weight, used to demonstrate the safety of the site location. If a licensee later wanted to offer the launch site for the launch of a larger class of vehicles or a different type of launch vehicle, such as an unguided sub-orbital launch vehicle, the licensee would be required to request a license modification and demonstrate that the larger vehicle or different type of vehicle could be safely launched from the launch site. Likewise, the addition of a new launch point would require a license modification. The demonstration would be based on the same kinds of analyses used for the original license. In some cases, a licensee might be able to use the safety analyses performed by a launch operator to meet location review requirements.

Although the authority granted by the launch site operator license would be limited to certain types or classes of vehicles, the license would not represent a guarantee that the FAA would necessarily license any particular launch from an approved launch site. The demonstration is intended to ensure that the location of the launch site can safely support at least some type of vehicle, launched on a specific trajectory. The planned launch of an actual vehicle may differ from the hypothetical trajectory or vehicle characteristics used for the launch site location demonstration, potentially posing different risks to the public than those used in the site location demonstration. In addition to the protection provided by a safe launch site location, the safety of any actual flight of a launch vehicle will be dependent on the safety procedures, personnel qualifications, safety systems, and other elements of the proposed launch. Consequently, each launch operator, other than the U.S. Government, must obtain a launch license for its specific operations.

F. Operational Responsibilities

The FAA is proposing to impose certain operational responsibilities on an operator of a launch site. In addition, the FAA proposes to distinguish between activities covered by a license to operate a launch site and those covered by a launch license. Any activity that will be approved as part of a launch license will not be covered in a launch site operator license even if the launch site operator provides the service. For example, because a launch licensee will need to assure the adequacy of ground tracking, approval of ground tracking systems will be handled in the launch license process even if a launch site operator provides the service. Similarly, in the case of ground safety, a launch site operator may provide fueling for a launch licensee, but safe procedures for fueling will be addressed in the launch license.

The operational requirements being proposed for the operator of a launch site addresses control of public access, scheduling of operations at the site, notifications, recordkeeping, launch site accident response and investigation, and explosive safety. A launch site operator licensee would be required to control access to the site. Security guards, fences, or other physical barriers may be used. Anyone entering the site must, on first entry, be informed of the site's safety and emergency response procedures. Alarms or other warning signals would be required to alert persons on the launch site of any emergency that might occur when they are on site. If a launch site licensee has multiple launch customers on site at one time, the licensee must have procedures for scheduling their operations so that the activities of one customer do not create hazards for others.

Because it is more efficient to have a single point of contact for launches conducted at a site, the FAA is proposing that the launch site operator be responsible for all initial coordination with the appropriate FAA regional office having jurisdiction over the airspace where launches will take place and the U.S. Coast Guard (where applicable) through a written agreement. The FAA's Air Traffic Service and the Coast Guard issues Notice to Airmen and Mariners, respectively, to ensure that they avoid hazardous areas. An FAA Air Route Traffic Control Center also closes airways during a launch window, if necessary. A launch site operator would be required to obtain an agreement regarding procedures for coordinating contacts with these agencies for launches from the site. The requirement for coordinating with the Coast Guard might not, of course, always be applicable, for example, for an inland launch site. A launch site operator licensee would also have to notify local officials with an interest in the launch. These would include officials with responsibilities that might be called into play by a launch mishap, such as fire and emergency response personnel.

Another operational requirement being proposed is for the operator of a launch site to develop and implement a launch site accident investigation plan containing procedures for investigating and reporting a launch site accident. This would extend similar reporting, investigation and response procedures

currently applicable to launch related accidents and incidents to accidents occurring during ground activities at a launch site. Lastly, an operator of a launch site would have responsibilities regarding explosives, specifically, those dealing with lightning and electric power lines. This has been discussed above.

III. Part Analysis

Part 417—License to Operate a Launch Site

The FAA removes and reserves part 417 and creates part 420 to address licensing and operation of a launch site.

Part 420—License to Operate a Launch Site

Proposed § 420.1 would describe the scope of proposed part 420. Part 420 would encompass the requirements for obtaining a license to operate a launch site and with which a licensee must comply.

Proposed § 420.3 would specify the person who must apply for a license to operate a launch site, and the person who must comply with regulations that apply to a licensed launch site operator. Because a launch site operator is someone who offers a launch site to others for launch, only someone proposing such an offer need obtain a license to operate a launch site. A launch operator proposing to launch from its own launch site need only obtain a launch license because a launch license will address safety issues related to a specific launch and because a launch license encompasses ground operations.

Proposed § 420.5 would add terms that have not been previously defined by the FAA. These definitions would apply in the context of part 420, which governs the licensing and safety requirements for operation of a launch site. These terms do not apply outside part 420. Specifically, the following terms would be defined:

Ballistic Coefficient (β) means the weight (W) of an object divided by the quantity product of the coefficient of drag (C_d) of the object and the area (A) of the object.

$$\beta = \frac{W}{(C_d \cdot A)}$$

A ballistic coefficient is a parameter used to describe flight characteristics of an object.

Compatibility means the chemical property of materials that may be located together without adverse reaction. Compatibility in storage exists when storing materials together does not increase the probability of an accident or, for a given quantity, the magnitude of the effects of such an accident. Compatibility determines whether materials require segregation. The FAA derived this definition from a NASA definition, which states that compatibility is ''the chemical property of materials to coexist without adverse reaction for an acceptable period of time. Compatibility in storage exists when storing materials together does not increase the probability of an accident or, for a given quantity, the magnitude of the effects of such an accident. Storage compatibility groups are assigned to provide for segregated storage.'' [12] The FAA proposes to adapt the NASA definition in order to describe coexistence with greater specificity.

Debris dispersion radius (D_{max}) means the estimated maximum distance from a launch point that debris travels given a worst-case launch vehicle failure and flight termination at 10 seconds into flight. If a launch vehicle failure occurs shortly after ignition, and a flight termination system is employed, the FAA expects the debris to be contained within an area described by D_{max}.

Division 1.3 explosive means an explosive as defined in 49 CFR 173.50. That provision is part of the hazardous materials regulations of the Research and Special Programs Administration (RSPA) of the Department of Transportation. Section 173.50 defines a division 1.3 explosive as ''. . . consist(ing) of explosives that have a fire hazard and either a minor blast hazard or a minor projection hazard or both, but not a mass explosion hazard.'' This classification is identical to the United Nations Organization classification, and is also used by NASA and the Department of Defense.

Downrange area means a portion of a flight corridor beginning where a launch area ends and ending 5,000 nautical miles (nm) from the launch point for an orbital launch vehicle, and ending with an impact dispersion area for a guided sub-orbital launch vehicle.

E,F,G coordinate system means an orthogonal, Earth-fixed, geocentric, right-handed system. The origin of the coordinate system is at the center of an ellipsoidal Earth model. The E-axis is positive directed through the Greenwich meridian. The F-axis is positive directed through 90 degrees east longitude. The EF-plane is coincident with the ellipsoidal Earth model's equatorial plane. The G-axis is normal to the EF-plane and positive directed through the north pole.

E,N,U coordinate system means an orthogonal, Earth-fixed, topocentric, right-handed system. The origin of the coordinate system is at a launch point. The E-axis is positive directed east. The N-axis is positive directed north. The En-plane is tangent to an ellipsoidal Earth model's surface at the origin and perpendicular to the geodetic vertical. The U-axis is normal to the EN-plane and positive directed away from the Earth.

Effective casualty area (A_c) means the aggregate casualty area of each piece of debris created by a launch vehicle failure at a particular point on its trajectory. The effective casualty area for each piece of debris is the area within which 100 percent of the unprotected population on the ground are assumed to be a casualty, and outside of which 100 percent of the population are assumed not to be a casualty. This area is based on the characteristics of the debris piece including its size, the path angle of its trajectory, impact explosions, and debris skip, splatter, and bounce.

Explosive means any chemical compound or mechanical mixture that, when subjected to heat, impact, friction, detonation or other suitable initiation, undergoes a rapid chemical change that releases large volumes of highly heated gases that exert pressure in the surrounding medium. The term applies to materials that either detonate or deflagrate. With the exception of a minor editorial change, this proposed definition is identical to that of NASA.[13] For comparison, 49 CFR 173.50 of RSPA's regulations defines an explosive as, ''. . . any substance or article . . . which is designed to function by explosion . . . or which, by chemical reaction within itself, is able to function in a similar manner even if not designed to function by explosion. . . .'' Both definitions are consistent with each other, and the FAA proposes to use the NASA definition because it is more descriptive.

Explosive equivalent means a measure of the blast effects from explosion of a given quantity of material expressed in terms of the weight of trinitrotoluene (TNT) that would produce the same blast effects when detonated. This proposed definition is identical to the NASA definition for ''TNT equivalent,'' and similar to the DOD definition of ''explosive equivalent'' which defines the term, in relevant part, as ''(t)he amount of a standard explosive that, when detonated, will produce a blast effect comparable to that which results at the same distances from the

[12] NASA Standard at A–2.

[13] NASA Standard at A–4.

detonation or explosion of a given amount of the material for which performance is being evaluated.'' [14] DOD uses TNT as the standard explosive, thus rendering the NASA and DOD terms interchangeable. FAA proposes to use the more general term ''explosive equivalent'' instead of ''TNT equivalent.''

Explosive hazard facility means a facility at a launch site where solid or liquid propellant is stored or handled. The FAA proposes to define this term for the purpose of identifying specific hazard facilities on a launch site that present potential explosive hazards. NASA and DOD use the more general term ''potential explosive site,'' which is defined, in part, as ''the location of a quantity of explosives that will create a blast fragment, thermal, or debris hazard in the event of an accidental explosion of its contents. . . .'' [15] As proposed, an explosive hazard facility may include a location where explosives are either handled or stored.

Flight azimuth means the initial direction in which a launch vehicle flies relative to true north expressed in degrees-decimal-degrees. For example, due east is 90 degrees.

Flight corridor means an area on the earth's surface estimated to contain the majority of hazardous debris from nominal and non-nominal flight of an orbital or guided sub-orbital launch vehicle.

Guided sub-orbital launch vehicle means a sub: orbital rocket that employs an active guidance system.

Impact dispersion area means an area representing an estimated five standard deviation dispersion about a nominal impact point of an intermediate or final stage of a sub-orbital launch vehicle. The definition is confined to proposed part 420, and should not be confused with other impact dispersion areas that may be defined by the federal launch ranges for their particular launch safety programs.

Impact dispersion factor means a constant used to estimate, using a stage apogee, a five standard deviation dispersion about a nominal impact point of an intermediate or final stage of a sub-orbital launch vehicle. Intermediate stages include all stages up to the final stage.

Impact dispersion radius (R) means a radius that defines an impact dispersion area. It applies to all launch vehicle stages.

Impact range means the distance between a launch point and the impact point of a sub-orbital launch vehicle stage.

Impact range factor means a constant used to estimate, with the use of a launch vehicle stage apogee, the nominal impact point of an intermediate or final stage of a sub-orbital launch vehicle.

Instantaneous impact point (IIP) means an impact point, following thrust termination of a launch vehicle, calculated in the absence of atmospheric drag effects, that is, a vacuum. This shows the point at which launch vehicle debris would land in the event thrust was terminated. In this proposal, the IIP calculations would assume a vacuum.

Instantaneous impact point (IIP) range rate means a launch vehicle's estimated IIP velocity along the Earth's surface. It is typically abbreviated as $\dot{R}$, or R-dot.

Intraline distance means the minimum distance permitted between any two explosive hazard facilities in the ownership, possession or control of one launch site customer. Intraline distance prevents the propagation of an explosion. In other words, with an appropriate intraline distance, an explosive mishap at one explosive hazard facility would not cause an explosive event at another explosive hazard facility. The FAA anticipates that worker safety requirements will dictate protection of employees and anticipates that all licensees will familiarize themselves with those requirements and conform to them in accordance with the law. Unlike distances used to protect the public, intraline distance will not protect workers with the same level of protection as the public. NASA defines intraline distance as ''(t)he distance to be maintained between any two operating buildings and sites within an operating line, of which at least one contains or is designed to contain explosives, . . .''.[16] Thus, for NASA, the criteria for using intraline distance is whether the areas are within an operating line. An operating line is a ''group of buildings used to perform the consecutive steps in the loading, assembling, modification, normal maintenance, renovation, or salvaging of an item or in the manufacture of an explosive or explosive device.'' [17] The FAA's proposed definition is more suitable to its statutory obligation to protect public safety because public safety dictates only that explosive hazard facilities of one launch operator be sited in a manner to prevent the propagation of an explosion. If intraline distances are not maintained between two explosive hazard facilities, then the larger area encompassing both quantities must be used for Q–D purposes when determining prescribed distances to the public.

Launch area means, for a flight corridor defined using appendix A, the portion of a flight corridor from the launch point to a point 100 nm in the direction of the flight azimuth. For a flight corridor defined using appendix B, a launch site is the portion of a flight corridor from the launch point to the enveloping line enclosing the outer boundary of the last D_i dispersion circle.

Launch point means a point on the earth from which the flight of a launch vehicle begins, and is defined by the point's geodetic latitude, longitude and height on an ellipsoidal Earth model.

Launch site accident means an unplanned event occurring during a ground activity at a launch site resulting in a fatality or serious injury (as defined in 49 CFR 830.2) to any person who is not associated with the activity, or any damage estimated to exceed $25,000 to property not associated with the activity. The FAA considers any licensee or its employees, or any licensee customer, contractor, or subcontractor or the employees of any of these persons to be associated with a ground activity. Property not associated with the activity will typically include any property belonging to members of the public or personal property of employees. Property associated with the activity includes the property of a launch site operator or launch licensee, or either licensee's customers, contractors or subcontractors.

Net explosive weight (NEW) means the total weight, expressed in pounds, of explosive material or explosive equivalency contained in an item. This term is used for applying Q–D criteria to solid propellants, and for liquid propellants when explosive equivalency applies. Explosive equivalency applies to liquid propellants when a liquid fuel and a liquid oxidizer are close enough together that their explosive potential combined must be used when determining prescribed distances to the public.

Nominal means, in reference to launch vehicle performance, trajectory, or stage impact point, a launch vehicle flight where all launch vehicle aerodynamic parameters are as expected, all vehicle internal and external systems perform exactly as planned, and there are no external perturbing influences (e.g., winds) other than atmospheric drag and gravity.

Nominal trajectory means the position and velocity components of a nominally

[14] DOD Standard at A–4.

[15] DOD Standard at A–7; NASA Standard at A–9.

[16] NASA Standard at A–7.

[17] NASA Standard at A–8.

performing launch vehicle relative to an x,y,z, coordinate system, expressed in $x,y,z,\dot{x},\dot{y},\dot{z}$. The x,y,z coordinates describe the position of the vehicle both for projecting the proposed flight path and during actual flight. The $\dot{x},\dot{y},\dot{z}$ variables describe the velocity of the vehicle.

Overflight dwell time means the period of time it takes for a launch vehicle's IIP to move past a populated area. For a given populated area, the overflight dwell time is the time period measure along the nominal trajectory IIP ground trace from the time point whose normal with the trajectory intersects the most uprange part of the populated area to the time point whose normal with the trajectory intersects the most downrange part of the populated area.

Overflight exclusion zone means a portion of a flight corridor which must remain clear of the public during the flight of a launch vehicle.

Populated area means a land area with population. For a part 420 site location risk analysis of a populated area within the first 100 nm of a launch point, a populated area is no greater than a census block group in the U.S., and an equivalent size outside the U.S. For analysis of a part 420 flight corridor more than 100 nm downrange from the launch point, a populated area is no greater than a 1° X 1° latitude/longitude grid, whether in the United States or not.

Population density means the number of people per unit area in a populated area.

Position data means data referring to the current position of a launch vehicle with respect to time using the X, Y, Z coordinate system.

Public area means any area outside an explosive hazard facility and is an area that is not in the possession, ownership or other control of a launch site operator or of a launch site customer who possesses, owns or otherwise controls that explosive hazard facility. For purposes of Q–D criteria, the proposed rules treat any location outside a launch site boundary as a public area for any activity at a launch site. Certain areas within a launch site are also considered public areas for purposes of applying Q–D criteria. With respect to any given launch operator, areas where other launch operators are located, or where the launch site operator Commission is located, are public areas.

Public area distance means the minimum separation distance permitted between a public area and an explosive hazard facility. Although NASA and DoD differentiate between areas that contain inhabited buildings and areas that contain public traffic routes, with inhabited buildings requiring greater separation distances, the FAA's proposed requirements does not make the same differentiation.[18] The FAA proposes to use NASA's and DoD's more conservative inhabited building distance as the required distance between an explosive hazard facility and all public areas. This is because a public area is not in the control of the applicant, and can, therefore, contain anything from open land to groups of office buildings. This is consistent with the approach taken by NASA and DoD for areas outside a launch site. For example, NASA defines inhabited building distance as ''(t)he minimum allowable distance between an inhabited building and an explosive area. Inhabited building distances are used between explosives areas and administrative areas, also between operating lines with dissimilar hazards and between explosive locations and other exposures. Inhabited building distances will also be provided between explosive areas and Center boundaries.''[19]

Unguided sub-orbital launch vehicle means a sub-orbital rocket that does not have a guidance system.

X,Y,Z coordinate system means an orthogonal, Earth-fixed, topocentric, right-handed system. The origin of the coordinate system is at a launch point. The X-axis coincides with the initial launch azimuth and is positive in the downrange direction. The Y-axis is positive to the left looking downrange. The XY-plane is tangent to the ellipsoidal earth model's surface at the origin and perpendicular to the geodetic vertical. The Z-axis is normal to the XY-plane and positive directed away from the earth.

ϕ_0, λ_0, λ_0 means a latitude, longitude, height system where ϕ_0 is the geodetic latitude of a launch point, λ_0 is the east longitude of the launch point, and h is the height of the launch point above a reference ellipsoid. ϕ_0 and λ_0 are expressed in degrees decimal degrees, which is abbreviated as DDD.

Proposed subpart B would contain the criteria and information requirements for obtaining a license to operate a launch site. Section 420.15 would specify the information that an applicant for a launch site license would have to submit as part of its license application. The FAA requires this information to evaluate environmental impacts, whether the launch site location could safely be used to conduct launches, issues affecting national security and foreign policy, explosive site safety, and whether the applicant will operate safely.

Proposed § 420.15(a) contains the environmental review requirements currently located at § 417.105–107.

Proposed § 420.15(b) would provide the information necessary for a location review. It would also require foreign ownership information and an explosive site plan.

Proposed § 420.15(c) requires an applicant to demonstrate how it will satisfy its subpart D responsibilities. Specifically, a license applicant must show how the applicant proposes to control public access pursuant to § 420.53, how it proposes to comply with the scheduling requirements of § 420.55, and how it proposes to satisfy the notification obligations of § 420.57. The FAA requires this information to ascertain whether an applicant will be able to satisfy the subpart D performance requirements and for compliance monitoring purposes. With regard to the notification obligations of § 420.57, an applicant must submit its agreements with the U.S. Coast Guard district and the FAA regional office for air traffic services to demonstrate satisfaction of the requirements of § 420.57(b) and (c). A license applicant must also show how it proposes to comply with the accident investigation requirements in § 420.59 and requirements on explosives in § 420.63.

Proposed § 420.15(d) provides that an applicant who is proposing to locate a launch site at an existing launch point at a federal launch range is not required to perform a location review if a launch vehicle of the same type and class as proposed for the launch point has been safely launched from the launch point. An applicant who is proposing to locate at a federal launch range is not required to submit an explosive site plan.

Section 420.17 would establish the bases upon which the FAA will make its license determination. This includes the FAA's determination of the adequacy of information provided by the applicant, the conclusions of the environmental and policy reviews, the adequacy of the explosive site plan, and satisfaction of site location requirements. The FAA will notify the applicant of, and allow the applicant to address, any deficiencies in the application.

Section 420.19 would require an applicant to demonstrate that its proposed launch site location will allow for the safe launch of at least one type of launch vehicle by defining flight corridors or impact dispersion areas and estimating casualty expectancy.

[18] Nor does the FAA attempt to protect inhabited buildings that are not considered property of the public.

[19] NASA Standard at A–7.

Section 420.21 would require an applicant to specify which launch vehicle type and class would be launched from each launch point at the proposed launch site. This section also proposes to define the minimum distance from each launch point to a launch site boundary.[20] The three types of expendable launch vehicle proposed account for the critical distinctions between launch vehicles designed for orbital or sub-orbital flight, and between those with and without guidance systems. Guided orbital expendable launch vehicles typically require an FTS, which means that the greatest risk to the public stems from debris caused by destruction of a vehicle. Guided sub-orbital launch vehicles will be treated similarly to orbital launch vehicles, except for the nominal impact of the final stage. In contrast, unguided sub-orbital launch vehicles generally have high reliability levels, and therefore crate the greatest public risk through nominal stage impact. The methods proposed in the appendices are designed to account for these differences in public risk. Orbital expendable launch vehicles are also sorted by class, which is determined by payload weight capacity. Minimum distances are based on actual computations for each of the launch vehicle types and classes. The safety of launch points for reusable launch vehicles will be evaluated on a case-by-case basis in a manner consistent with the principles expressed here.

Section 420.23 would state that the FAA will evaluate the adequacy of a launch site location for unproven launch vehicles on a case-by-case basis.

Subpart B also contains the FAA's proposed explosive facility siting standards for the protection of the public from launch site explosive hazards created by liquid and solid propellants. These standards would be used by an applicant to site facilities that support activities involving liquid and solid propellants, or facilities potentially exposed to such activities, and to document the layout of these facilities.[21]

In order to comply with proposed subpart B, an applicant would first determine those areas at its proposed launch site where solid or liquid propellant would be stored or handled, and which the FAA proposes to designate as explosive hazard facilities. They may include payload processing facilities, launch pads, propellant storage or transfer tanks, and solid rocket motor assembly buildings. An applicant must then determine the types and maximum quantity of propellants to be located at each explosive hazard facility. For solid propellants, the applicant would determine the total weight, expressed in pounds, of division 1.3 explosive material to be contained in the items that will be located at each explosive hazard facility. For liquid propellants, the applicant would determine either the explosive equivalency of a fuel and oxidizer combination if fuels and oxidizers would be located together at, what is referred to as, incompatible distances; or, if fuels and oxidizers would not be located together, an applicant would determine the net weight in pounds of liquid propellant in each explosive hazard facility.

The next step for an applicant would be to determine the minimum allowable separation distance between each explosive hazard facility and all other explosive hazard facilities, the launch site boundary, and other public areas such as the launch complex of another launch operator, public railways and highways running through the launch site, and any visitor centers. The distances between explosive hazard facilities are important to ensure that an explosive event in one explosive hazard facility would not cause an explosive event in another explosive hazard facility. The distances between explosive hazard facilities and public areas are important to ensure that the public is protected from blast, debris, and thermal hazards. Exact distances must be given between the wall or corner of the facility closest to the closest wall or corner of other explosive hazard facilities and public areas. Minimum allowable distances based on the type and quantity of propellant to be located within an explosive hazard facility. Determining the minimum allowable distance between two explosive hazard facilities is accomplished by applying the applicable criteria to each and then separating them by at least the greater distance prescribed for each explosive hazard facility. For example, if a certain amount of division 1.3 solid propellant would be located at explosive hazard facility A, and twice as much division 1.3 solid propellant would be located at explosive hazard facility B, the prescribed distance generated by explosive hazard facility B would serve as the minimum distance permitted between explosive hazard facility A and explosive hazard facility B.

Proposed § 420.31(a) would require an applicant to provide the FAA an explosive site plan that establishes that the applicant's proposed distances satisfy the explosive siting criteria. The explosive site plan must include a scaled map or maps that show the location of all proposed explosive hazard facilities where solid and liquid propellants would be stored or handled.[22] An applicant must include the class and division for each solid propellant and the hazard and compatibility group for each liquid propellant.

In addition to the location of explosive hazard facilities, the map or maps would indicate actual and minimum allowable distances between each explosive hazard facility and other explosive hazard facilities and each public area, including the launch site boundary. One means by which an applicant could show that the distances are at least the minimum required in the proposed rules would be by drawing a circle or arc with a radius equal to the minimum allowed distance centered on each explosive hazard facility.

Unlike the DOD and NASA standards, which both define numerous separation distances, the proposed rules define only two distances for solid propellants, namely, a public area distance and an intraline distance. Public area distance would serve as the minimum distance permitted between a public area and an explosive hazard facility. Facilities and other infrastructure such as roads, railways, and inhabited buildings may or may not be public areas, depending on whether the public has access at the time explosives are present in the explosive hazard facility. Examples include a public road or railroad running through a launch site, and a visitor center where members of the public would be located.[23] Likewise,

[20] The FAA also proposed minimum distances between a launch point and a launch site boundary in its explosive site plan requirements in subpart B. Because both requirements apply, an applicant must apply the greater of the D_{max} or Q–D distance to accommodate the greater of the hazards.

[21] An analysis may include evaluations of blast hazards; fragment hazards; protective construction; grounding, bounding and lighting protection systems; electrical installations; natural or man-made terrain features; or other mission or local requirements.

[22] Areas where solid propellants would be stored would be included in the plan even though ATF requirements apply. Applicants with magazines where solid propellants are to be stored must obtain an ATF permit and meet ATF quantity-distance requirements. The FAA will use the information to ensure that those of its requirements unrelated to storage are satisfied and to coordinate with ATF when necessary.

[23] A launch site operator who does not wish to employ the appropriate public area distance between an explosive hazard facility and public areas such as, for example, a visitor center, must propose operational limitations in its application. These would consist of such strictures as not allowing members of the public in the visitor center while explosives are present in the explosive

Continued

different launch site customers are also considered the public with respect to each other. Intraline distance would provide the minimum distance permitted between any two explosive hazard facilities used by one launch site customer. In this regard, for planning purposes, an applicant should bear in mind that using the greater public area distance would avoid later operational constraints when different customers wanted to use facilities sited at intraline distances.

In addition to containing maps, an explosive site plan would also describe, through tables or lists, the maximum quantities of liquid and solid propellants to be located at each explosive hazard facility, and the activities to be conducted within each explosive hazard facility.

Pursuant to proposed § 420.31(b), the requirement to submit an explosive site plan to the FAA would not apply to an applicant applying for a license to operate a launch site at a federal launch range. Federal launch ranges have separate rules which are either identical or similar to the rules proposed, or require mitigation measures which otherwise ensure safety.

The criteria for determining the minimum required distances between each explosive hazard facility and all other explosive hazard facilities and each public area, including the launch site boundary, are proposed in § 420.33 for solid propellants and § 420.35 for liquid propellants. Proposed § 420.37 includes rules for when liquid and solid propellants are located together.

Proposed § 420.33 covers quantity determinations and minimum required distances for explosive hazard facilities where solid propellants would be handled. Under proposed § 420.33(a), an applicant would first determine the maximum total quantity of explosive in each explosive hazard facility where solid propellants would be handled. The total quantity of explosives in an explosive hazard facility shall be the maximum total weight, expressed in pounds, of division 1.3 explosive material in the contents of the explosive hazard facility. For example, if a facility could hold up to ten solid rocket motors of a particular type, even though it might only rarely hold that many motors, the applicant would calculate the total weight of division 1.3 explosive material in the ten motors.

The proposed rules are based on an assumption that only division 1.3 solid propellant will be located at a launch site in sufficient quantities to affect facility location. The FAA is aware that the launch vehicle used for the first launch from Kodiak Launch Complex, a launch site operated by the recently licensed Alaska Aerospace Development Corporation (AADC), had a second stage motor with division 1.1 propellant. The FAA believes this will be a rare occurrence in the future. The FAA realizes that 1.1 explosives, such as those used in launch operator's flight termination system, will also likely be located at a launch site. However, current practice is to design such components so as not to be able to initiate division 1.3 components when installed on a vehicle. The FAA anticipates that it will require any licensed launch operator to demonstrate that its 1.1 devices do not initiate 1.3 components as is the current practice at federal launch ranges. Therefore, the amount of such ordnance used with division 1.3 explosives may be disregarded for Q–D purposes. The total quantity of explosives shall be the NEW of the division 1.3 components.

Once an applicant has determined the total quantity of solid propellants in each explosive hazard facility, proposed § 420.33(b) would require an applicant to separate each explosive hazard facility where solid propellants will be handled from all other explosive hazard facilities and each public area, including the launch site boundary, in accordance with the minimum separation distances contained in proposed table E–1 in appendix E. Table E–1 provides two distances for each quantity level. The first, a public area distance, is the minimum distance permitted between a public area and an explosive hazard facility. The second, an intraline distance, is the minimum distance permitted between any two explosive hazard facilities used by one launch site customer. Other explosive hazard facilities may constitute public areas, because the definition of public area includes any area in the possession or ownership, or otherwise under the control of a launch site operator's other customers. Distance calculations would be made accordingly. Table E–1 contains the same distances as the NASA and DOD standards, except that the DOD standard has more increments. An applicant may use linear interpolation for quantity values between those provided in the table. Additionally, because table E–1 does not include quantities greater than 1,000,000 pounds, an applicant with an explosive hazard facility where solid propellants in quantities greater than 1,000,000 pounds would be handled would use the equations proposed in § 420.33(b) to obtain separation distances.

An applicant would measure a separation distance from the closest source of debris or hazard under proposed § 420.33(c). For example, for a building, an applicant would use for measurement the wall or corner of the facility closet to the closest wall or corner of other explosive hazard facilities and public areas. When solid rocket motors or motor segments are freestanding, an applicant would measure from the closest motor or motor segment. An acceptable way to demonstrate that minimum distance requirements are met is to draw a circle or arc centered on the closest source of debris or hazard showing that no other explosive hazard facility or public area is within the distance permitted.

Note that Q–D requirements address siting of facilities, not operational control of hazard areas. During actual operations, the existence and size of a hazard area is dependent on the actual amount of explosive material in an explosive hazard facility.

Proposed § 420.35 covers quantity determinations and distance requirements for explosive hazard facilities that support the storage or handling of liquid propellants. In addition to applying to distances between an explosive hazard facility and other explosive hazard facilities and public areas, distance requirements may apply within an explosive hazard facility as well.

Liquid propellants are classified and separated differently than solid propellants. Where solid propellants are classified by class and division, each liquid propellant is assigned to one of three hazard groups and one of two compatibility groups. A hazard group categorizes liquid propellants according to the hazards they cause. Hazard group 1 represents a fire hazard, hazard group 2 represents a more serious fire hazard, and, because a liquid propellant in hazard group 3 can rupture a storage container, it represents a fragmentation hazard. Each liquid propellant also falls into one of two compatibility groups. Liquid propellants are compatible when storing them together does not increase the probability of an accident or, for a given quantity of propellant, the magnitude of the effects of such an accident. Propellants in the same compatibility group do not increase the probability or magnitude of an accident. The two proposed compatibility groups consist of fuels and oxidizers, and are what the NASA and DOD standards label A and C. The FAA proposes to use the same labeling to provide continuity. Proposed group A represents oxidizers

hazard facility not sited according to the proposed requirements.

such as LO2 and N2O4, and proposed group C represents fuels such as RP–1 and LH2. Proposed appendix E provides the hazard and compatibility groups for current launch vehicle liquid propellants in table E–3.

Explosive equivalency serves as another source of difference between the treatment of solid and liquid propellants. Only if fuels and oxidizers are to be located within certain distances of each other would the separation requirements designed to account for the hazardous consequences of their potential combination apply. That combination is measured in terms of explosive equivalency. Explosive equivalency for liquid propellants is a measure of the blast effects from explosion of a given quantity of fuel and oxidizer mixture expressed in terms of the weight of TNT that would produce the same blast effects when detonated. Fuels should not be located near oxidizers if possible. The significance of the hazard groups and compatibility groups is that if fuels are located far enough from oxidizers, the minimum distance requirements to public areas and other explosive hazard facilities depend only on the quantity and hazard group of the individual liquid propellants. If operational requirements require fuels and oxidizers to be located near each other, that is, at less than the minimum public area and incompatible distances proposed in tables E–4, E–5 and E–6, the explosive equivalency of the incompatible propellants must be calculated and used to determine the distances proposed in table E–7 to other explosive hazard facilities and public areas.

Appendix E contains four distance tables with separation requirements for liquid propellants. Tables E–4, E–5 and E–6 contain separation distances for hazard group 1, 2, and 3, respectively. Table E–7 contains separation distances for when fuels and oxidizers are located less than prescribed distances apart so that explosive equivalency applies. Table E–7 contains distances similar to those for 1.1 solid explosives. This is because the ''explosive equivalency'' of a fuel and oxidizer mixture is measured in terms of its equivalent explosive blast effect to TNT, which is a class 1.1 explosive. Table E–7 also prescribes public area and intraline distances.

Tables E–4, E–5, and E–6 have two distances listed for each quantity of liquid propellant by hazard group. The first, a ''public area and incompatible'' distance, is the minimum distance permitted between a given quantity of liquid propellant and a public area. The distance is also the same distance by which incompatible propellants must be separated (e.g. the minimum distance between a fuel and an oxidizer) for explosive equivalency and Table E–7 not to apply to the distance calculations. The second, an ''intragroup and compatible'' distance, is the distance by which propellants in the same hazard group, or propellants in the same compatibility group must be separated (e.g. the minimum distance between two fuels) to avoid adding the quantity of each propellant container being separated in calculating distances. This is simply because if two propellant tanks are far enough apart, they cannot react with one another, even were a mishap to occur. This introduces the third difference between liquid propellant separation requirements and the requirements for solid propellants.

The third area where liquid propellant separation requirements are different than those for solid propellants may be found in calculations of the quantity of liquid propellant that determines the distance relationship with other explosive hazard facilities and public areas. Quantity calculations may depend on distance. As an example, suppose one was determining the minimum distance required between a tank farm having many containers of fuel, and a launch site boundary. If the containers were all close together the applicant would simply take the total amount of fuel, look up the ''public area and incompatible'' distance in the table that corresponded to the hazard group of the fuel, and ensure that the distance between the closest wall or corner of the explosive hazard facility and the launch site boundary was at least the distance listed in the table. However, if the containers were separated from each other so that the distance between each container met the minimum ''intragroup and compatible'' [24] distance in the table, the total quantity of propellant to be used for the ''public area'' distance determination is only the quantity in each container. Therefore, as discussed below, although quantity determination requirements may be found in proposed § 420.35(a) and proposed § 420.35(b) contains distance determination requirements, quantity determinations for liquid propellants may depend on distances between containers.

Like the procedure for solid propellant quantity and distance determinations, an applicant's first step in siting liquid propellants would be to determine the quantity of liquid propellant or, if applicable, the explosive equivalent of the liquid propellant to be located in each explosive hazard facility. An applicant determines this through three steps specified in proposed § 420.35(a). First, proposed § 420.35(a)(1) states that the quantity of propellant in a tank, drum, cylinder, or other container is the net weight in pounds of the propellant in that container. The weight of liquid propellant in associated piping must be included in the determination of quantity to any point where positive means, such as shutoff valves, are provided for interrupting the flow through the pipe, or for interrupting a reaction in the pipe in the event of a mishap.

Next, proposed § 420.35(a)(2) applies when two or more containers of compatible propellants are stored together in an explosive hazard facility. When liquid propellants are compatible, the quantity of propellant used to determine the minimum separation distance between the explosive hazard facility and other explosive hazard facilities and public areas shall be the total quantity of liquid propellant in all containers unless either the containers are separated one from the other by the ''intragroup and compatible'' distance contained in appendix E, table E–4, E–5 or E–6, depending on the hazard group, or the containers are subdivided by intervening barriers to prevent their mixing. In those two cases, the quantity of propellant in the explosive hazard facility requiring the greatest separation distance must be used to determine the minimum separation distance between the explosive hazard facility and all other explosive hazard facilities and public areas.

Finally, proposed § 420.35(a)(3) applies to quantity determinations when two or more containers of incompatible liquid propellants are stored together in an explosive hazard facility. If each container is not separated from every other container by the ''public area and incompatible'' distances identified in appendix E, tables E–4, E–5 and E–6, an applicant must determine the total quantity of explosives by calculating the explosive equivalent in pounds of the combined liquids, using NASA formulas contained in table E–2, to determine the minimum separation distance between the explosive hazard facility and other explosive hazard facilities and public areas. If the containers are, in fact, to be separated one from the other by the appropriate ''incompatible'' distance, an applicant would determine the minimum separation distance to another explosive hazard facility or public area using the quantity of propellant within the explosive hazard facility requiring the greatest separation distance. For

[24] The category is called ''intragroup and compatible'' to cover propellants that are in different hazard groups but are still compatible.

example, if 50 pounds of hazard group 1 fuel were 31 feet from 150 pounds of hazard group 1 fuel, the minimum required distance to a public area would be 35 feet, reflecting the public area distance required by the greater quantity of fuel.

Proposed § 420.35(a)(4) requires an applicant to convert liquid propellant quantities from gallons to pounds using conversion factors in table E–3, and the equation provided. The proposed requirement reflects a NASA standard.[25]

After an applicant has determined the quantity of liquid propellant or, if applicable, the explosive equivalent of the liquid propellants to be located in each explosive hazard facility, an applicant must then determine the separation distances between each explosive hazard facility and public areas. Proposed § 420.35(b) specifies the rules by which an applicant determines the separation distances between propellants within explosive hazard facilities, and between explosive hazard facilities and public areas. An applicant would first use table E–3 to determine hazard and compatibility groups. An applicant would then separate propellants from each other and from each public area using at least the distances provided in tables E–4 through E–7. With one exception, as discussed below, tables E–1 and E–7 reflect the NASA standard.

Proposed § 420.35(b)(1) would require that an applicant measure minimum separation distances from the container, building, or positive cutoff point in piping which is closet to each public area or explosive hazard facility requiring separation.

Proposed § 420.35(b)(2) would impose a minimum separation distance between compatible propellants. An applicant would measure the separation distance between compatible propellants using the ''intragroup and compatible'' distance for the propellant quantity and group that requires the greater distance prescribed in tables E–4, E–5, and E–6. The distance between any two propellants is computed by first determining what the minimum required distances is for each propellant based on the quantity and hazard group of that propellant. The one requiring the greater distance is controlling for the pair.

Proposed § 420.35(b)(3) would apply to the minimum separation distance between incompatible propellants. An applicant would have to measure the separation distance between propellants of different compatibility groups using the ''public area and incompatible'' distance from the propellant quantity and group that requires the greater distance prescribed by tables E–4, E–5, and E–6, unless the propellants of different compatibility groups are subdivided by intervening barriers to prevent their mixing. If intervening barriers are to be present, the minimum separation distance shall then be the ''intragroup and compatible'' distance for the propellant quantity and group that requires the greater distance prescribed by tables E–4, E–5, and E–6.

Proposed § 420.35(b)(4) would apply to the separation of liquid propellants from public areas. An applicant shall separate these propellants from public areas using no less than the ''public area'' distance prescribed by tables E–4, E–5, and E–6.

Proposed § 420.35(b)(5) would apply to propellants where explosive equivalents apply prescribed by subparagraph (a)(3). An applicant shall separate each explosive hazard facility that will contain propellants where explosive equivalents apply from all other explosive hazard facilities that are under the control of the same customer public areas is the public area distance in table E–7. Table E–7 is a revised form of the NASA standard.

Proposed § 420.37 would specify the rules to be used when solid and liquid propellants are located together, such as at launch pads and test stands. For applicants proposing an explosive hazard facility where solid and liquid propellants are to be located together, § 420.37 provides three steps that an applicant should use to determine the minimum separation distances between the explosive hazard facility and other explosive hazard facilities and public areas. An applicant would first determine the minimum separation distances between the explosive hazard facility and other explosive hazard facilities and public areas required for the solid propellants alone, in accordance with proposed § 420.33. An applicant would then determine the minimum separation distances between the explosive hazard facility and other explosive hazard facilities and public areas required for the liquid propellants alone, in accordance with § 420.35. If explosive equivalents apply, an applicant would determine the minimum separation distances between the explosive hazard facility and other explosive hazard facilities and public areas required for the liquid propellants using appendix E, table E–7F, in accordance with § 420.35. An applicant would then apply the greater of the distances determined by the liquid propellant alone or the solid propellant alone.

Subpart C contains license term and conditions. Section 420.41 would specify the authority granted to a launch site operator by a license and the licensee's obligation to comply with representations contained in the license application as well as the FAA's license terms and conditions. The provision limits a licensee's authority to the launch points on the launch site and to the types of launch vehicles used to demonstrate the safety of the launch site location, and, for orbital launch vehicles, to vehicles no larger than the class analyzed. The provision would also clarify the licensee's obligation to comply with any other laws or regulations applicable to its licensed activities and identifies certain rights that are not conveyed by a launch site operator license.

Section 420.43 would specify the duration of a license to operate a launch site, the grounds for shortening the term, and that a license may be renewed.

Section 420.45 would provide the procedures that an applicant must follow to obtain FAA approval for the transfer of an existing license to operate a launch site.

Section 420.47 would specify the procedures that the FAA would allow to modify a license through a license order or written approval, and the procedures that a launch site operator licensee must follow to obtain an FAA license modification. A licensee must obtain a license modification if the licensee proposes to operate the launch site in a manner not authorized by its license. This means, among other things, that if a representation in the license application regarding an issue material to public safety is no longer accurate or does not describe the licensee's operation or intended operation of the site, a licensee must obtain a license modification. This is because the representations a licensee makes in its application become part of the terms and conditions of its license.

A licensee must obtain FAA approval prior to modifying its operations. For example, a licensee whose application stated that it would prevent unauthorized access to its launch site through the use of security personnel might decide, in the course of its operation, that physical barriers might better serve to accomplish this goal. The FAA considered that, on the one hand, the ability to immediately institute a change might best control public access because if a licensee has to wait for its license to be modified prior to instituting a change, needed safety improvements might be unnecessarily delayed. On the other hand, the FAA's

[25] NASA Standard at 7–7.

mandate requires that it first ascertain whether the proposed change is indeed acceptable. Accordingly, the FAA decided that it must first be advised of a proposed change and must approve its implementation. In the event of special circumstances and where safety warrants, the FAA will work with a licensee to accommodate any timing problems.

Proposed § 420.47 also specifies the procedures for a licensee to obtain and the FAA to issue a license modification. The FAA could modify a license using a written approval rather than a license order in cases where the change addresses an activity or condition that was represented in the license application but not spelled out in a license order.

Section 420.49 would impose an obligation on a launch site operator licensee, its customers, and its contractors to cooperate with the FAA in compliance monitoring of licensed activities. This requirement recognizes an FAA compliance monitor's need to observe operations conducted by all parties at the site and to have access to records and personnel if the FAA is to be assured that public safety is being protected.

Subpart D contains the responsibilities of a licensee. Section 420.51 would describe a licensee's obligation to operate its launch site in accordance with the representations in its license application, 49 U.S.C. Subtitle IX, ch. 701 and the FAA's regulations.

Section 420.53 would require a launch site operator licensee to control public access to the launch site and to protect the public present at the launch site. The proposed regulation seeks to protect the public from the consequences of flight and pre-flight activities by separating the public from hazardous launch procedures. The public could also be at risk if allowed to enter the launch site or move about without adequate safeguards. This provision would require the licensee to prevent the public from gaining unauthorized access to the launch site. The applicant would be given broad discretion in selecting the method for controlling access. The provision would also hold the licensee responsible for informing members of the public of safety precautions before entry and for warning of emergencies on-site. A licensee would also be responsible for escorting the public between harzard areas not otherwise controlled by a launch operator at the launch site, and employing warning signals or alarms to notify persons on the launch site of any emergency.

Section 420.55 would require a licensee to develop and implement procedures to coordinate operations carried out by launch site customers, including launch operators, and their contractors. This requirement is necessary to ensure that the operations of one launch site customer do not interact with the operations of another customer to create a public safety hazard at the launch site or beyond. For example, the testing of equipment using radio frequency transmissions could trigger ordnance used by someone elsewhere on the site, if the two launch preparation activities are not coordinated or warnings issued. Likewise, hazardous operations by one customer with the potential to reach another customer must be coordinated by the launch site operator. A launch site licensee would be required to ensure that all customers at the site are informed of procedures and adhere to scheduling requirements before commencing operations at the launch site.

Section 420.57 would establish notification requirements for a licensee. The licensee would be responsible for notifying customers of any limitations on use of the site. This provision would ensure that customer activities re compatible with other activities at the launch site. It would also ensure that limitations on the use of facilities provided to customers by a launch site operator are communicated to the customer. The licensee will be responsible for possessing agreements with the Coast Guard to arrange for issuance of Notices to Mariners during launches and with the regional FAA office for Notice to Airmen and closure of air routes. In addition, the licensee will notify local officials and landowners adjacent to the launch site of the flight schedule. This provision places an on-going responsibility on the site operator licensee for establishing notification procedures, rather than on the numerous launch licensees whose involvement with the launch site may be more sporadic and temporary. The proposed requirement would, however, leave open the option of a launch licensee implementing the procedures established by the launch site operator.

Section 420.59 would require a licensee to development and implement a launch site accident investigation plan containing procedures for reporting, investigating and responding to a launch site accident. The provision would extend reporting, investigation and response procedures currently applicable to launch related accidents and incidents to accidents occurring during round activities at a launch site. The proposed rule allows launch site operators to satisfy the requirements of § 420.59 by using accident investigation procedures developed in accordance with the requirements of the U.S. Occupational Safety and Health Administration (OSHA) at 29 CFR 1910.119 and 120, and the U.S. Environmental Protection Agency (EPA) at 40 CFR part 68, to the extent that the procedures include the elements provided § 420.59.[26] The FAA wishes to ease the regulatory burden here and in other parts of the proposed rules where other federal regulatory agencies impose requirements on launch site operators.

OSHA's standard at 29 CFR 1910.119 includes provisions for investigating incidents and emergency response. *See* 29 CFR 1910.119(m) and (n). In addition, 29 CFR 1910.120, hazardous waste operations and emergency response (HAZWOPER), provides for emergency response planning for operations involving hazardous materials, including those listed by the Department of Transportation under 49 CFR 172.101.[27] Launch operators and launch site operator in compliance with these requirements will be taking steps to protect the public as well as their workers.

EPA's requirements at 40 CFR part 68 also include standards for incident investigation and emergency response. *See* 40 CFR 68.60, 68.81, 68.90, and 68.180. for both the OSHA and EPA requirements, compliance with 42 U.S.C. 11003, Emergency Planning and Community Right-to-Know, satisfies many of the emergency response provisions.

The FAA is interested in the public's view of proposed § 420.59, particularly the extent to which other regulatory agency requirements such as OSHA and EPA help to ensure launch site operators respond to an investigate launch site accidents.

Section 420.61 would provide the requirements for launch site operator retention or records, data, and other material needed to verify that launch site operator operations are conducted in accordance with representations contained in the licensee, and for recorded production in the event of

[26] The EPA's requirements in 40 CFR part 68 apply to ''incidents which resulted in, or could reasonably have resulted in a catastrophic release.'' 40 CFR 68.60(a). OSHA's requirements in 29 CFR 1910.119 are similar, applying to ''each incident which resulted in, or could reasonably have resulted in a catastrophic release of a highly hazardous chemical in the workplace.'' 29 CFR 1910.119(m)(l).

[27] Hazardous materials in AST regulations, § 401.5, are defined as hazardous materials as defined in 49 CFR 172.101.

launch site accident investigation, or compliance monitoring.

Section 420.63 would provide responsibilities of a launch site operator regarding explosives. Section 420.63(a) would require a launch site operator to ensure that the configuration of the launch site is in accordance with the licensee's explosive site plan, and that its explosive site plan is in compliance with the requirements in §§ 420.31–420.37.

Section 420.63(b) would require a launch site operator to ensure that the public is not exposed to hazards due to the initiation of explosives by lightning. Unless an explosive hazard facility has a lightning warning system to permit termination of operations and withdrawal of the public to public area distance prior to the incidence of an electrical storm, or the explosive hazard facility is to contain explosives that cannot be initiated by lightning, it must have a lightning protection system to ensure explosives are not initiated by lightning. A lightning protection system shall include an air terminal to intentionally attract a lightning strike, a low impedance path—called a down conductor—connecting an air terminal to an earth electrode system, and an earth electrode system to dissipate the current from a lightning strike to ground.

Because no lightning protection system is necessary if a launch site operator has a lightning warning system to permit termination of operations and withdrawal of the public to public area distance prior to the incidence of an electrical storm, proposed § 420.63 does not explicitly protect the public from the inadvertent flight of a solid rocket motor. The FAA is interested in public views on this point.

A lightning protection system shall also include measures for bonding and surge protection. For bonding, all metallic bodies shall be bonded to ensure that voltage potentials due to lightning are equal everywhere in the explosive hazard facility. Fences within six feet of the lightning protection system shall have bonds across gates and other discontinuations and shall be bonded to the lightning protection system. Railroad tracks that run within six feet of the lightning protection system shall be bonded to the lightning protection system. For surge protection, a lightning protection system shall include surge protection for all metallic power, communication, and instrumentation lines coming into an explosive hazard facility to reduce transient voltages due to lightning to a harmless level.

Lightning protection systems shall be visually inspected semiannually and shall be tested once each year for electrical continuity and adequacy of grounding. A record of results obtained from the tests, including action taken to correct deficiencies noted, must be maintained at the explosive hazard facility.

Section 420.63(c) would require a launch site operator to ensure that electric power lines on the launch site meet the distance requirements provided. A full discussion of explosive hazard mitigation measures is provided in the general preamble above.

Appendix A

Of the two methods the FAA proposes for allowing an applicant to demonstrate the existence of a guided launch vehicle flight corridor that satisfies the FAA's risk criteria, appendix A typically offers the more conservative approach in that it produces a larger area as well as the more simple of the options available for guided orbital and suborbital launch vehicles. In order to achieve the simplicity this approach offers, the FAA based certain decisions regarding the methodology on a series of what it intends as conservative assumptions and on hazard areas previously developed by the federal launch ranges for the guided launch vehicles listed in table 1 of § 420.21.

The greater simplicity of the approach derives from the fact that, unlike the method of appendix B, an applicant need obtain no meteorological data and need not plot the trajectory of a particular launch vehicle. Instead, recognizing that a typical flight corridor consists of a series of fans of decreasing angle extending out from a launch point, the FAA proposes, with certain modifications, to employ a variation on that typical corridor for its proposed appendix A analysis.

The FAA's proposed appendix A flight corridor estimation contains a number of elements, each of which an applicant must define for each of its proposed launch points. An appendix A flight corridor consists of a circular area around a selected launch point, an overflight exclusion zone, a launch area and a downrange area. A flight corridor for a guided orbital launch vehicle ends 5,000 nautical miles from the launch point, and, for a guided suborbital launch vehicle, the flight corridor ends with the impact dispersion area of the launch vehicle's final stage.

Once an applicant has produced an appendix A flight corridor, the applicant must ascertain whether the flight corridor contains population, and, if so, whether the use of the corridor would present unacceptable risk to that population. If so, whether the use of the corridor would present unacceptable risk to that population. If no members of the public reside within the corridor, the FAA would approve the proposed location of the site.[28] If the flight corridor is populated, the FAA proposes to require an applicant to perform a risk analysis as set forth in appendix C. If the proposed corridor satisfies the FAA's risk criteria, the FAA will approve the location of the site. If, however, the proposed corridor fails to satisfy the FAA's risk criteria, an applicant has certain options. The applicant may attempt another appendix A flight corridor by selecting a different flight azimuth or by selecting a different launch point at the proposed launch site, or by selecting a different launch vehicle type or class. Or, the applicant may, using the more accurate but more complicated calculations of appendix B, narrow its flight corridor and determine whether that flight corridor satisfies the FAA's risk criteria.

To create a hypothetical flight corridor under proposed appendix A an applicant must first determine from where on the launch site a guided launch vehicle would take flight. That position is defined as a launch point. An applicant must determine the geodetic latitude and longitude of each launch point that it proposes to offer for launch, and select a flight azimuth for each launch point. An applicant should know whether it plans to offer the site for the launch of guided orbital or sub-orbital launch vehicles. If planning for the launch of guided orbital launch vehicles, the applicant must decide what launch vehicle class, as described by payload weight in proposed § 420.21, table 1, best represents the largest launch vehicle class the launch site would support.

Once an applicant has made the necessary decisions regarding location and vehicle class, the next step in creating an appendix A flight corridor is to look up the maximum distance (D_{max}) that debris is expected to travel from a launch point if a worst-case launch vehicle failure were to occur and flight termination action destroyed the launch vehicle at 10 seconds into flight. D_{max} serves as a radius that defines a circular area around the launch point. The FAA has estimated, on the basis of federal launch range experience, the D_{max} for a guided suborbital launch vehicle and for

[28] An applicant must still obtain written agreements with the FAA regional office having jurisdiction over the airspace where launches will take place and, if appropriate, with the U.S. Coast guard regarding procedures for coordinating launches from the launch site.

each guided orbital launch vehicle class and provided the results that an applicant should employ in table A–1, appendix A.

The circular area, defined by D_{max}, is part of an overflight exclusion zone. An overflight exclusion zone in an appendix A flight corridor consists of a rectangular area of the length prescribed by table A–2, capped up-range by a semi-circle with radius D_{max}, centered on the launch point. Its downrange boundary is defined by an identical semi-circular arc with a radium D_{max}, centered on the endpoint prescribed by table A–2. The cross-range boundaries consist of two lines parallel to and to either side of the flight azimuth. Each line is tangent to the upgrade and downgrade D_{max}, circles as shown in appendix A, figure A–1.

An appendix A flight corridor also contains a launch area. The launch area extends from the uprange boundary, which is coextensive with the circle created by the radius D_{max}, to a line drawn perpendicular to the flight azimuth one hundred nautical miles down range of the launch point. The launch area's cross-range boundaries are a function of the lengths of two lines perpendicular to the flight azimuth: one drawn ten nautical miles down range from the launch point and the other line drawn one hundred nautical miles down range from the launch point. Table A–3 provides the lengths of the line segments.

Adjacent to the launch area is the downrange area. For purposes of appendix A, a corridor's downrange area extends from the one hundred nautical miles line to a line, perpendicular to the flight azimuth, that is 5,000 nautical miles downrange from the launch point for the guided orbital launch vehicle classes, and to an impact dispersion area for a guided suborbital launch vehicle corridor. The down range area's cross-range boundaries connect the prescribed endpoints of the perpendicular lines at one hundred nautical miles and 5,000 nautical miles. Table A–3 provides the lengths of the line segments.

All applicants must determine whether the public resides within this flight corridor. If no populated areas exist, an applicant may submit its analysis for the FAA's launch site location review. If there is population located within the flight corridor, the applicant must calculate the risk to the public following the criteria provided in appendix C. The expected casualty (E_c) result for the flight corridor must not exceed 30×10^{-6} for the applicant to satisfy the proposed location requirements.

Map Requirements and Plotting Methods

To describe a flight corridor and any populated areas within that corridor, an applicant must observe data and methodology requirements for mapping a flight corridor and analyzing populations. These requirements apply to all appendices.

The FAA proposes to require certain geographical data for use in describing flight corridors for each appendix. The geographical data must include the latitude and longitude of each proposed launch point at a launch site, and all populated areas in a flight corridor. The accuracy requirement for the launch area portion of the analyses calls for map scales of no smaller than 1:250,000 inches per inch. The actual map scale will depend on the smallest census block group size in a launch area. The FAA bases its proposed scale requirement on average range rates in the launch area, because range rates have a direct impact on dwell times over populated areas. While in the launch area of a flight corridor, the instantaneous impact point (IIP) ground trace would tend to linger over any populated areas, which increases the E_c for an individual populated area. The map scale required by the FAA is large enough to allow an applicant to determine the dwell time and size for each applicable populated area.

Using a similar approach, the FAA proposes to establish an accuracy requirement for the downrange area of a flight corridor. A map scale may be no smaller than 1:20,000,000 inches per inch. The scale would be smaller than that required for the launch area because the dwell times over downrange populated areas is small and the map scale must only be large enough to allow an applicant to determine the dwell time and the size of each populated area downrange. Maps satisfying these accuracy requirements are readily available. For example, civil aeronautical charts are published and distributed by the U.S. Department of Commerce, National Oceanic and Atmospheric Administration (NOAA), and are also published by the Defense Mapping Agency and distributed by NOAA.

Besides scale, the FAA has proposed requirements for projections, depending on the plotting method used. Proposed appendices A, B, C and D would require an applicant to use cylindrical, conic, and plane map projections. The FAA proposes these map projections for the analyses because they produce only small error with straight line measurements. Maps may be produced using several different map projections depending on the map scale, geographic region being depicted, and the application. A map projection, according to the U.S. Geological Survey,[29] is a device for producing all or part of a round body on a flat sheet. All map projections have inherent distortions. The distortions are virtually unavoidable and are directly, related to the techniques for displaying latitude and longitude lines on a flat surface area. Therefore, many maps are developed for specific applications requiring that some map characteristics be shown more accurately at the expense of others. The flight corridor methods are primarily sensitive to azimuthal direction and geodetic length of the flight corridor line segments. Therefore, it is important to use map projections that preserve scale and direction accuracy. Cylindrical, conic, and plane map projections have been reviewed by the FAA and are most appropriate types for the launch site application analyses.

The regular cylindrical projections consist of meridians, which are equidistant parallel straight lines, crossed at right angles by straight parallel lines of latitude, generally not equidistant. Geometrically, cylindrical projections can be partially developed by unrolling a cylinder which has been wrapped around a globe representing the Earth, with the inside of the cylinder touching at the equator, and on which meridians have been projected from the center of the globe. When the cylinder is wrapped around the globe in a different direction, so that it is no longer tangent along the equator, an oblique or transverse projection results, and neither the meridians nor the parallels will generally be straight lines.

Normal conic projections are distinguished by the use of arcs of concentric circles for parallels of latitude and equally spaced straight radii of those circles for meridians. The angles between the meridians on the map are smaller than the actual differences in longitude. The circular arcs may or may not be equally spaced, depending on the projection. The name ''conic'' originatd from the fact that the more elementary conic projections may be derived by placing a cone on the top of a globe representing the Earth, the apex or tip in line with the axis of the globe, and the sides of the cone touching or tangent to the globe along a specified ''standard'' latitude which is true to scale and without distortion.

[29] Map Projections used by the ''U.S. Geological Survey,'' U.S. Geological Survey Bulletin 1532, 1982.

Meridians are drawn on the cone from the apex to the points at which the corresponding meridians on the globe cross the standard parallel. Other parallels are then drawn as arcs centered on the apex in a manner depending on the projection. If the cone is cut along one meridian and unrolled, a conic projection results.

The azimuthal projections are formed onto a plane which is usually tangent to the globe at either pole, the equator, or any intermediate point. These variations are called the polar, equatorial (or meridian or meridional), and oblique (or horizon) aspects, respectively. Some azimuthals are true perspective projections. Azimuthal projections are characterized by the fact that the direction, or azimuth, from the center of the projection to every other point on the map is shown correctly. The simplest forms of the azimuthal projections are the polar aspects, in which all meridians are shown as straight lines radiating at their true angles from the center, while parallels of latitude are circles concentric about the pole. Most azimuthal maps do not have standard parallels or standard meridians. Each map has only one standard point, the center. Thus, the azimuthals are suitable for minimizing distortion in a somewhat circular region such as Antarctica, but not for an era with predominant length in one direction.

Scale requirements, geographic location of the launch site, and plotting method are the main considerations for choosing a map projection. Of these considerations, the plotting method selected for development and depiction of the flight corridor line segments is the most important. Three plotting methods are provided in appendix A.

The ''mechanical method'' is the least complex, least costly, but also the least accurate of the methods suggested here. Selecting an appropriate map scale and using a map projection that minimizes inherent scale and direction distortions can minimize coordinate plotting errors. The ''Lambert-Conformal'' conic projection is acceptable because it has characteristics that preserve angles and scales from any point on the map.[30]

The ''semi-automated method'' provides more accurate techniques for determining the endpoint coordinates of each flight corridor line segment. Errors associated with measuring devices and the mapping medium tend to be the same as those associated with the mechanical method. Engineering judgment and some map errors are reduced through the use of range and bearing equations. These equations also allow the applicant to choose from a wider variety of map projections. The ''Mercator'' and ''Oblique Mercator'' are adequate cylindrical projections. ''Lambert-Conformal'' and ''Albers Equal-Area'' are adequate conic projections. The ''Lambert Azimuthal Equal-Area'' and ''Azimuthal Equidistant'' are adequate plane projections. An applicant may use other maps in support of its application, but the applicant would be required to demonstrate an equivalent level of accuracy over the required distances, and would have to describe the consequences of any mapping errors associated with the proposed map projection.

Each of these projections possesses a number of attributes, which make some better suited for some parts of the global than others. Typically, most projections preserve scale and direction when measured from a point of tangency or along a standard parallel or meridian. A Mercator projection is cylindrical and conformal, that is, all angles presented correctly , and for small areas, true shape of features is maintained. In a Mercator projection, meridians are equally spaced straight lines and parallels are unequally spaced straight lines, closest near the equator, cutting meridians at right angles. Scale is true along the equator, or along two parallels equidistant from the equator. The Mercator projection may produce great distortion of area in polar regions.

The Oblique Mercator is cylindrical (oblique) and conformal. It contains two meridians, 180° apart, which are straight lines. Other meridians and parallels are complex curves. Scale on the spherical form is true along a chosen central line, a great circle at an oblique angle, or along two straight lines parallel to central line. The scale on the ellipsoidal form is similar, but varies slightly from this pattern. Scale becomes infinite 90° from the central line.

The Lambert Conformal is conic and conformal. Its parallels are unequally spaced arcs of concentric circles, more closely spaced near the center of the map. Meridians are equally spaced radii of the same circles, and consequently cut parallels at right angles. Scale is true along two standard parallels normally, or along just one. A pole in the same hemisphere as standard parallels is a point. The other pole is at infinity.

The Albers Equal-Area is conic. Parallels are unequally spaced arcs of concentric circles, more closely spaced at the north and south edges of the map. Meridians are equally spaced radii of the same circles, cutting parallels at right angles. There is no distortion in scale or shape along two standard parallels normally, or along just one. Poles are arcs of circles.

The Lambert Azimuthal Equal-Area is azimuthal. All meridian in the polar aspect, the central meridian in other aspects, and the equator in the equatorial aspect are straight lines. The outer meridian of the hemisphere in the equatorial aspect, for the sphere, and the parallels in the polar aspect for sphere or ellipsoid are circles. All other meridians and parallels are complex curves. Scale decreases radially as the distance increases from the center, the only point without distortion.

The Azimuthal Equidistant is azimuthal. Distances measured from the center are true. Distances not measured along radii from the center are not correct. The center of projection is the only point without distortion. Directions from the center are true except on some oblique and equatorial ellipsoidal forms. All meridians on the polar aspect, the central meridian on the other aspects, and the equator on the equatorial aspect are straight lines. Parallels on the polar projection are circles spaced at true intervals equidistant for the sphere. The outer meridian of the hemisphere on the equatorial aspect for the sphere is a circle. All other meridians and parallels are complex curves.

All of these map projections, with the exception of the ''Lambert-Conformal'' conic, preserve scale and direction when measured along a standard parallel or meridian. Because range and bearing computations are relative to a particular ellipsoid of revolution—a geoid, not the projection of the geoid, the computed latitude and longitude placement will be correct for any projection assuming the map datum and the range and bearing datum are the same.

The FAA will not accept straight lines of long distances that result in significant distortions of the flight corridor. Attempting to draw straight lines for distances greater than 7.5 times the map scale on map scales greater than or equal to 1:1,000,000 will result in unacceptable errors. The distance factor of 7.5 was determined by plotting several hundred trajectory IIP points and finding equi-distant straight line segments that adequately represent the trajectory curve over a 5,000 nm range.

Appendix A provides an applicant with the equations the FAA proposes to require to perform range and bearing computations for the purpose of plotting

[30] The projections suggested below for the semi-automated method are accurate in scale and direction only from a point of tangency or the standard parallels. These limitations would produce additional errors when the using mechanical method.

a flight corridor on a map. The range and bearing from a launch point are used to determine the latitude and longitude coordinates of a point on the flight corridor. Range and bearing equations are standard geodesic computations which can be found in most geodesy text books. A geodesic is a curve describing the minimum length between two points on the surface of an ellipsoid such as the WGS–84 ellipsoid discussed below. The range and bearing computations are sometimes referred to as great circle math routines. Sodano's direct geodetic method is proposed here. The algorithm was developed in 1963 by Emanuel M. Sodano for the U.S. Army. The computations provide accuracy to less than a foot for ranges up to 6,000 nm and less than 1/100th of a second (0.000002778 degrees) for all azimuth angles.[31]

An applicant may create line segments to describe a flight corridor by using range and bearings from the launch point along various azimuths. Appendix A provides equations to calculate geodetic latitude (+N) and longitude (+E) given the launch point geodetic latitude (+N), longitude (+E), range (nm), and bearing (degrees, positive clockwise from North). The same equations may also be used to calculate an impact dispersion area by substituting a final stage impact point for the launch point. Appendix A also provides equations to calculate the distance of a geodesic between two points.

An alternative to range and bearing computations is to use geographic information system (GIS) software with global mapping data. GIS software is an effective tool for constructing and evaluating a flight corridor, and has the advantage of allowing an applicant to create maps of varying scales in the launch and downrange areas. Commercially available GIS products are acceptable to the FAA for use in Appendices A, B, C and D if they meet the map and plotting method requirements in paragraph (b) of appendix A. An applicant should note, however, that maps of different scales in GIS software may not match each other. For instance, the coastline of Florida on a U.S. map may not match the coastline on a world map. Applicants shall resolve such contradictions by referring to more accurate maps such as NOAA maps.

Once an applicant has selected a map for displaying a flight corridor's launch area, the line segment lengths may be scaled to the chosen map. Map scale units are actual distance units measured along the Earth's surface per unit of map distance. Most map scale units are given in terms of inches per inch (in/in). An applicant converts appendix A flight corridor line segment distances to the map scale distance by dividing the launch area flight corridor line segment length (inches) by the map scale (in/in). If, for example, an applicant selected a map scale of 250,000 in/in and the line segment for the launch area flight corridor was 1677008 inches, the equivalent scaled length of the line segment for constructing an appendix A launch area is (1677008/250,000)=6.7 inches of map distance. An applicant would then plot the line segment on the map for display purposes using the scaled line segment length of 6.7 inches. If an applicant were to choose a map with scale units other than inches per inch, the FAA would require a description of the conversion algorithm to inches per inch and sample computations. Also note that the FAA proposes to accept straight lines for distances less than or equal to 7.5 times the map scale on map scales greater than or equal to 1:1,000,000 inches per inch; or straight lines representing 100 nm or less on map scales less than 1:1,000,000in/in.

Weight Classes for Guided Orbital Launch Vehicles

Proposed appendix A distinguishes between the guided orbital launch vehicles represented in the appendix on the basis of weight class. The FAA does not propose to distinguish among guided suborbital launch vehicles on the basis of weight class for purposes of appendix A. For guided orbital launch vehicles, the FAA proposes to create four separate weight classes. These are used to determine the size of the debris dispersion radius around a launch point, and the size of an Appendix A flight corridor. The FAA selected the four launch vehicle classes based on the size and characteristics of launch vehicles that currently exist in the U.S. commercial inventory and that should approximate any proposed new launch vehicle as well. An applicant planning to support the launch of guided orbital launch vehicles should choose the largest launch vehicle class anticipated for launch from the chosen launch point. This maximizes the area of the flight corridor. Also, selection of the largest class anticipated lessens the possibility of having to obtain a license modification to accommodate a larger customer than an application may have originally encompassed.

The FAA proposes to rely on a 100-nm orbit as the standard for inter-class launch vehicle comparison purposes. It is a standard reference orbit used by launch vehicle manufacturers for descriptive purposes and allows the uniform comparison of launch vehicle throw weight capability. The FAA obtained the payload weights for the 28° and 90° orbital inclinations from the ''International Reference Guide to Space Launch Systems,'' S.J. Isakowitz, 2d Ed. (1995). They represent capabilities from CCAS and VAFB, respectively.

D_{max} Circle

A radius, maximum distance (D_{max}), is employed to define a circular area about a launch point. The circular area indicates the limits for both flight control and explosive containment following a worst-case launch vehicle failure and flight termination system activation at 10 seconds into flight. The worst-case failure represents a failure response, immediately following first motion, which causes the launch vehicle to fly in the up-range direction on a trajectory that maximizes the impact range. The ten second flight time represents a conservative estimate of the earliest elapsed time after launch that a flight safety officer would be able to detect the malfunction, initiate flight termination action, and actuate the flight termination system on the launch vehicle. The radius is the estimate D_{max} from the launch point that inert debris is expected to travel and beyond which the overpressure from explosive debris is not expected to exceed 0.5 pounds per square inch (psi). D_{max} accounts for the public risk posed by the greater of the wind-induced impact distance of a hazardous piece of inert debris, or the sum of the wind-induced impact distance of an explosive piece of debris and the debris 0.5 psi overpressure radius from the explosion. The values for DG_{max} in table A–1 appendix A, were derived from guided suborbital launch vehicles and guided orbital launch vehicles of the classes identified in table 1, § 420.21.

Overflight Exclusion Zone

Table A–2 and figure A–1 define an overflight exclusion zone. Because of the risks the early stages of flight create, the FAA proposes to require an applicant to demonstrate that the public

[31] The FAA developed a software tool to perform the appendix A calculations for guided orbital launch vehicles. This software tool has been developed in the FORTRAN computer language using Microsoft's Fortran Powerstation. All of the assumptions and equations explained here and contained in appendix A are implemented in the program. The applicant must provide the geodetic latitude, longitude, launch azimuth, and D_{max} from table A–1 as input to the program. The software outputs an ASCII text file of geodetic latitude and longitudes that describe the fight corridor boundary. The FORTRAN code listing and example intput/output may be obtained from the FAA.

will not be present in this area during a launch. An overflight exclusion zone is an area in close promimity to a launch point where the mission risk is greater than an E_c of 30×10^{-6} if one member of the public is present in the open. The FAA derived the data for table A–2 using high fidelity risk assessment computer models to estimate the E_c for the different vehicle classes in table 1, § 420.21.

Early in the flight phase launch vehicles have large explosive potential, a low IIP range rate, and an historically higher probability of failure relative to the rest of preorbital flight. The relatively simple risk estimation analysis defined in appendix C does not adequately model the true risk during this stage of flight, and does not serve as the basis for determining that the overflight exclusion zone represents an area where the FAA's risk threshold is not satisfied. Instead, the FAA derived the overflight exclusion zone using a high fidelity risk assessment computer program is use by the national ranges. The program is a launch area risk analysis program called DAMP (facility DAMage and Personal injury). DAMP relies on information about a launch vehicle, its trajectory and failure responses, and facilities and populations in the launch area to estimate hit probabilities and casualty expectation. The hazards analyzed by DAMP include impacting inert debris, and blast overpressures and debris projected from impact explosions.

For the purpose of the FAA's site location assessment, the proposed overflight exclusion zone downrange distances (D_{OEZ}) in table A–2 were derived by computing the downrange drag impact point distance for a ballisitic coefficient of 3 lbs/ft^2 at the first major staging event time for each of the expendable launch vehicle classes in table 1, § 420.21. The effective casually area used in the analysis was the average effective casualty area for the period of flight up to the first major staging event time. *See* table C–3. The DAMP risk assessment results showed that E_c values exceeded 30×10^{-6} for the time up to the first major staging event for each of the launch vehicle classes in table 1, § 420.21.

Risk assessments were also conducted for the time of flight immediately after the first major staging event. The results showed a significant decrease in the E_c estimates, and those estimates were within the E_c criteria of 30×10^{-6}. The decrease results from a combination of decreasing dwell times and a signficant reduction in the size of an effective casualty area following a major staging event.

The FAA compared the results obtained using the high fidelity risk models to the estimated casualty expectancy calculated using the risk analysis method from appendix C. The results from the appendix C method also show unacceptable risk inside the overflight exclusion zone, as shown in table ''3'' and ''4'' below. An appendix A flight corridor was applied to an appendix C risk analysis and the following variables were input as constants for the guided launch vehicle classes:

P_f=0.10
C=643 seconds
R-dot=.91 nm/s (from table C–2)
N_k=0.5 persons

As described in appendix C, when a populated area is split by a trajectory ground trace, each part of the populated area is evaluated separately and the E_c results of each part are summed to estimate the total E_c for the whole populated area. Hence, for this comparison a value of N_k=0.5 was used in each of the OEZ sections so the total E_c after summation would represent the risk for one person. Tables 3 and 4 show that the E_c inside the OEZ does not meet FAA criteria and does meet those criteria outside the OEZ.

TABLE 3.—PRIOR TO FIRST MAJOR STAGING EVENT

Class	X1 (mi)	X2(nm)	Y1(nm)	Y2(nm)	Sigma (nm)	Ac(nm2)	Ak(nm2)	Pi	E_c
Small	0.00	3.70	0.00	1.20	1.62	0.32	6.70	1.71E–04	40.9E–06
Medium	0.00	4.58	0.00	1.53	1.82	0.40	8.98	2.35E–04	52.3E–06
Med-Lrg	0.00	9.67	0.00	1.83	3.56	0.54	12.23	3.25E–04	71.7E–06
Large	0.00	14.76	0.00	2.14	5.31	1.46	34.66	3.95E–04	83.2E–06
		Med-Lrg values for table ''3'' and ''4'' were interpolated from the bounding classes.							
		Ac=average value up to first major staging event.							

TABLE 4.—AFTER FIRST MAJOR STAGING EVENT

Class	X1 (mi)	X2 (nm)	Y1 (nm)	Y2 (nm)	Sigma (nm)	Ac (nm2)	Ak (nm2)	Pi	E_c
Small	0.00	3.70	0.00	1.20	1.62	0.0982	6.70	1.71E–04	12.5E–06
Medium	0.00	4.58	0.00	1.53	1.82	0.0017	8.98	2.35E–04	22.2E–06
Med-Lrg	0.00	9.67	0.00	1.83	3.56	0.0831	12.23	3.25E–04	11.0E–06
Large	0.00	14.76	0.00	2.14	5.31	0.4682	34.66	3.95E–04	26.7E–06
		Med-Lrg values for tables ''3'' and ''4'' were interpolated from the bounding classes.							
		Ac = value after first major staging event.							

The FAA believes that it is efficient to address keeping an overflight exclusion zone clear of the public through a license to operate a launch site so that the licensee better able to address the issue does so. Moreover, although the FAA is willing to license the operation of a launch site from which a limited number or kind of launches may take place, the FAA does not want to license the operation of a launch site from which launch may never occur. The FAA proposes, therefore, to require that an applicant demonstrate either that the overflight exclusion zone is

unpopulated, that there are times when no one is present, or that the public can be excluded from this area during launch. Although a determination of this nature encompasses issues that will be addressed in a launch license, a launch site cannot support safe launches unless overflight of the highest risk area in close proximity to a launch point takes place without the public present. The FAA considered as an alternative permitting a prospective launch site operator to show that it would be able to clear resident population for one launch. For example, a prospective launch site operator might have a potential customer who has made arrangements for evacuation for a single launch. The FAA, however, wants to be assured that an OEZ would be clear for any launch that takes place from that site, and would, accordingly, require that, if the public does reside in an OEZ, or have other means of access to the OEZ, an applicant show that it has made arrangements for their absence during a launch.[32]

An applicant must display an overflight exclusion zone on maps using the requirements described in paragraph (b) of appendix A.

Launch Area

As noted at the beginning of this discussion, the FAA proposes to employ a series of fans as the shape of the foundation of its appendix A flight corridor. The FAA proposes the flight corridor fans to account for the turning capabilities and wind dispersed debris of a guided launch vehicle. The launch area fans have been divided into two regions, of 60 and 30 degrees, representing the malfunction turn capability of the launch vehicle relative to its velocity in the downtown direction. Each region is represented by the estimated maximum turning capability over a ground-range interval. These angles are the FAA's estimates for the maximum angles that the launch vehicle velocity vector may turn within a five second time period. The initial fan area is described by a 60° half angle extending ten nautical miles downrange from a launch point. The ten nautical mile threshold represents the FAA's estimate of where a vehicle's maximum turning rate capability is reduced to approximately 30 degrees due to increasing velocity in the downrange direction. The FAA obtained these estimates on the basis of a Delta II launch vehicle trajectory, and by employing an annualized wind speed within one standard deviation[33] and a debris ballistic coefficient of three. The FAA employed a Delta in its analysis because its thrust profile fell between Atlas and Titan and thus provided a representation of the mean performance parameters of launch vehicles at Cape Canaveral Air Station. This data and use of the appendix B methodology corroborated the selection of 60 and 30 degree half angles.

In the early stages of flight, but past the 100 nautical mile range, a guided launch vehicle is capable of malfunction turns up to 30°. Therefore, a 30° half angle was used to define the secondary fan area beginning 10 nautical mile downrange and ending 100 nautical mile downrange. Once a launch vehicle has reached the 100 nautical mile downrange point, the increasing velocity in the downrange direction continues to reduce the launch vehicle's ability to maneuver through a large malfunction turn.

The FAA proposes a 100 nautical mile distance as a delimiter between the launch area and the downrange area. From the launch point out to approximately the point where the IIP is 100 nautical miles downrange, most launch vehicles will be subjected to the aerodynamic forces of wind and drag. Once a launch vehicle's IIP has cleared the 100 nm limit, the FAA is willing to assume for purposes of appendix A that most launch vehicles are outside the atmosphere.

Figure 1 in appendix A depicts the launch area of a flight corridor. Figure 1 shows the relative placement of the line segments comprising the launch area of a flight corridor. The left and right sides of the flight corridor are mirror images, with the flight azimuth serving as the line between the two sides. Table A–3 in appendix A tabulates the lengths of the perpendicular line segments comprising the launch area.

[32] The FAA recognizes that this requirement would protect persons within an OEZ during a launch but not their property. For the time being, the FAA would not address risks to the property of the public in an OEZ but leave the matter to be accommodated through private financial arrangements.

[33] The FAA employed the wind speeds from the Global Gridded Upper Air Statistics database for grid point 27.5 North geodetic latitude and 280.0 East longitude. The database covers the period 1980 through 1995.

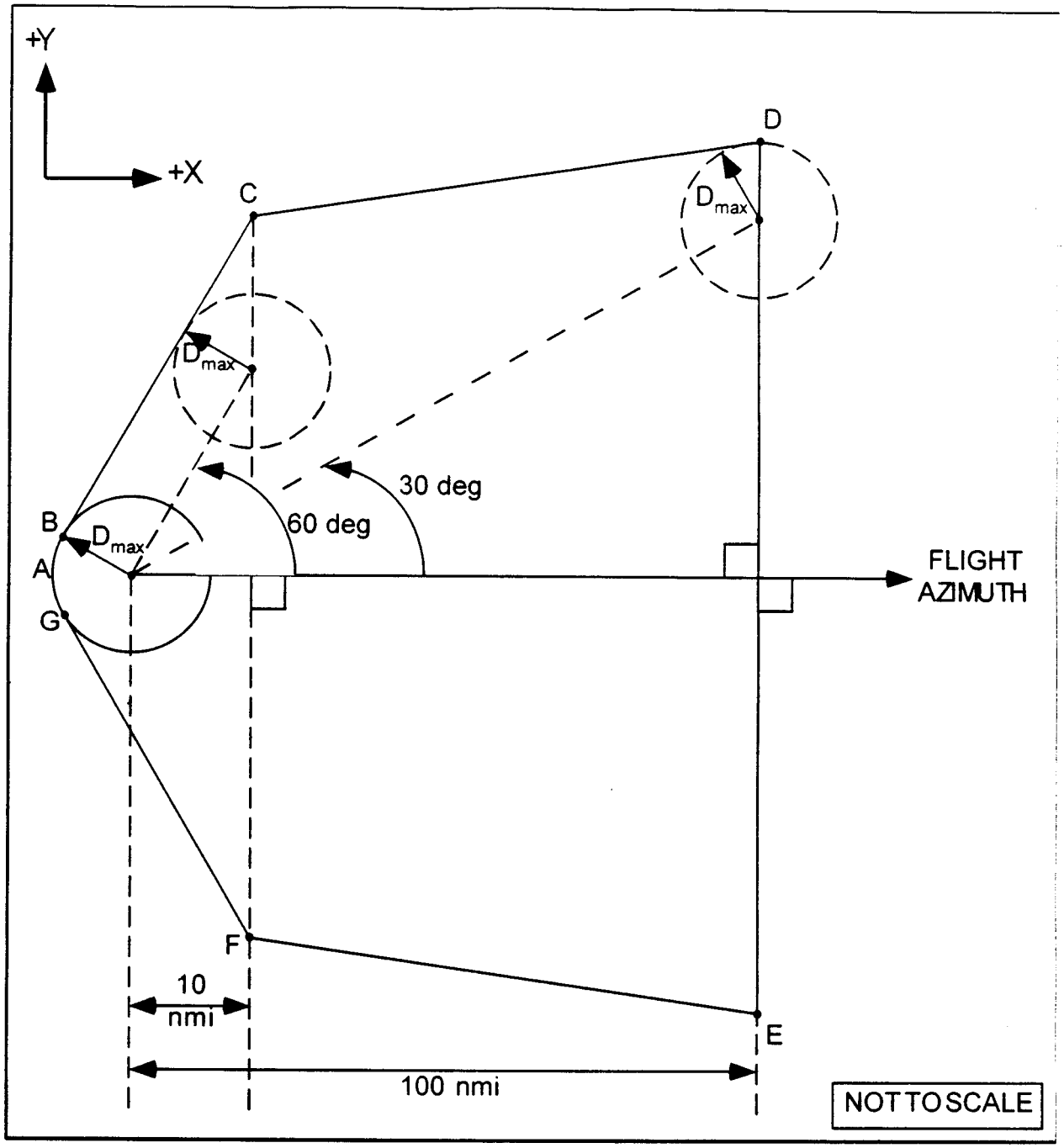

Figure 1
Flight Corridor Launch Area

BILLING CODE 4910–13–C

Downrange Area

The FAA derived the proposed appendix A flight corridor's downrange area from hazard areas previously developed by federal launch ranges for the classes of launch vehicles defined in table 1 of § 420.21. The downrange fan area of the flight corridor, as shown in figure 2, is based on turning capabilities and impact dispersions of guided expendable launch vehicles. The size of the fan area is necessary for containing launch vehicle debris in the event that a launch vehicle failure initiates a maximum-rate malfunction turn and the flight termination system must be activated. In the later stages of flight a guided launch vehicle's capability to turn is reduced due to increasing velocities in the downrange direction. Therefore, a 10° half angle was used to define the downrange area, which reflects a combination of normal vehicle dispersions and malfunction turns.

The downrange area of a flight corridor begins 100 nm from a launch point and, for the guided orbital launch vehicle classes, extends 5,000 nm downrange from the launch point. The FAA proposes 5,000 nm as the end of an appendix A flight corridor because overflight dwell times for the remaining flight time result in an insignificant risk to the public. In general, after an orbital launch vehicle IIP has passed the 5,000 nm point its IIP range rates increase very rapidly as the launch vehicle approaches orbital insertion. As a result, the dwell times decrease significantly, reducing the overflight risk to insignificant levels. For an applicant employing a guided suborbital launch vehicle, a flight corridor would end with the impact dispersion area of a final stage.

Figure 2 depicts the downrange area of a flight corridor. The figure depicts the relative placement of the line segments comprising the downrange area of a flight corridor. The left and right sides of a flight corridor are mirror images, with the flight azimuth serving as the line between the two sides. Table A–3 in appendix A provides the lengths of the line segments comprising the downrange area. The scaling information discussed above with respect to the launch area applies to the downrange area as well. If an applicant chooses a map with scale units other than inches per inch the FAA will require the applicant to describe the conversion algorithm to inches per inch and to provide example computations.

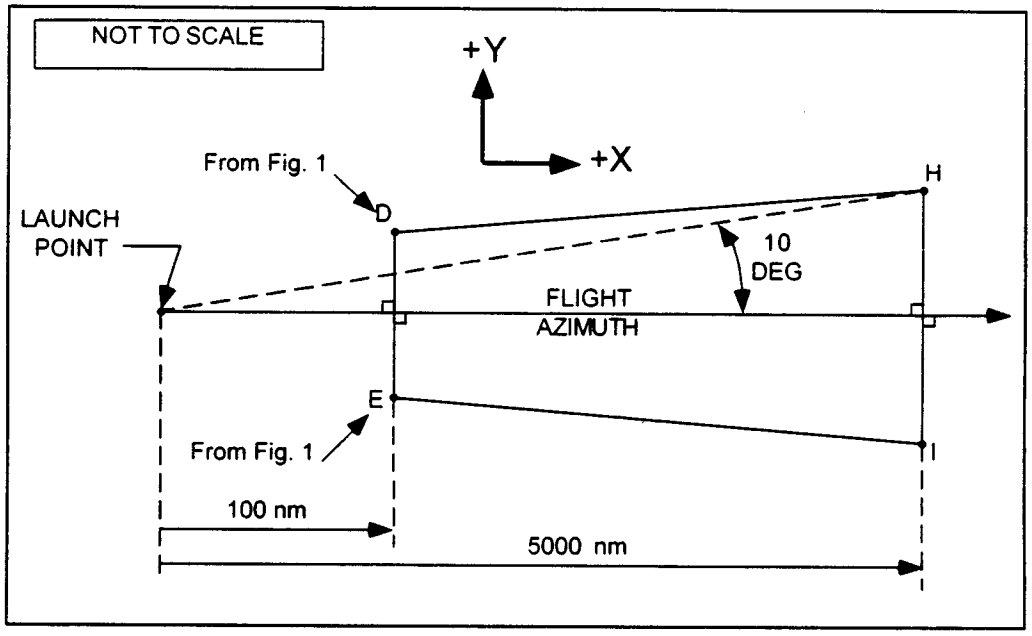

Figure 2
Downrange Area of Flight Corridor

Appendix B

Appendix B provides another means for creating a hypothetical flight corridor from an applicant's proposed launch site. As with a flight corridor created pursuant to appendix A, an appendix B corridor would identify the populations, those within the defined flight corridor, that must be analyzed for risk. An appendix B analysis offers an applicant a means to demonstrate whether a flight corridor from its launch site satisfies the FAA's risk criteria for a guided orbital or suborbital launch vehicle. Appendix B allows an applicant to perform a more individualized containment analysis rather than relying on the more conservative estimates the FAA derived for appendix A. Because an appendix B analysis uses actual meteorological data and a trajectory, whether actual or computer simulated, of a real launch vehicle, it produces a flight corridor of greater accuracy than one created under appendix A. The FAA derived the methodology from techniques developed for federal launch ranges to calculate the distance that debris would travel as a function of perturbing forces. The FAA's derived the assumptions and simplifications in the appendix B analysis from launch vehicle data

representing historical launch vehicle malfunction behavior.

A flight corridor created using appendix B contains, on its face, the same elements as an appendix A flight corridor, including a circular area around a launch point with a radius of D_{max}, an overflight exclusion zone, a launch area and a downrange area. Appendix B, however, produces and configures the last two elements differently than appendix A. The launch area of an appendix B flight corridor shows where launch vehicle debris would impact in the event of a vehicle failure, and takes into account local meteorological conditions. The downrange area of a flight corridor also shows where launch vehicle debris would impact given a vehicle failure, but takes into account vehicle imparted velocity, malfunctions turns, and vehicle guidance and performance dispersions. Also, like an appendix A flight corridor, the uprange portion of the flight corridor is described by a semi-circle arc that is a portion of either the most uprange dispersion circle, or the overflight exclusion zone, whichever is further uprange.

The FAA's proposed appendix B launch area analysis assumes a vehicle failure and destruction at one second intervals along a trajectory z value, which denotes height as measured from the launch point, up to 50,000 feet. An applicant must determine the maximum distance a hazardous piece of debris would travel under local meteorological conditions. The distances that the debris travels provide the boundaries of an appendix B flight corridor's launch area. After a height of 50,000 feet, which is where the FAA estimates, for purposes of this analysis, that debris created by a launch vehicle's destruction has less exposure to atmospheric forces, an applicant shall determine how far harmful debris created by destruction of a launch vehicle would travel based only on malfunction imparted velocity and vehicle dispersion in order to create a downrange area. Although the effects of wind above 50,000 feet are not, in reality, non-existent, they are sufficiently diminished when compared to the effects of malfunction imparted velocity and launch vehicle dispersion for purposes of this estimation.

D_{max} Circle

As with an appendix A flight corridor, an applicant must select each launch point at its proposed launch site from which it expects a guided expendable launch vehicle to take flight. An applicant must obtain the latitude and longitude of the launch point to four decimal places. If relying on a guided orbital launch vehicle, the applicant must also select a launch vehicle class from § 420.21, table 1, that best represents the largest class each proposed launch point would support. With the information, the applicant then ascertains the D_{max} that debris is expected to travel from a launch point if a mishap were to occur in the first 10 seconds of flight by employing table A–1, appendix A. Table A–1 also provides a maximum distance for sub-orbital launch vehicles. The D_{max} distance provided by table A–1 defines a circular area around the launch point.

Overflight Exclusion Zone

That circular area is part of an overflight exclusion zone. Again, an applicant uses information from appendix A to create an overflight exclusion zone, although an appendix B flight corridor's uprange boundary may extend further than its overflight exclusion zone. An overflight exclusion zone consists of the circular area defined by the radius D_{max} at the launch point and a corridor of the length prescribed by table A–2. Its downrange boundary is defined by an arc with a radius D_{max} centered on the endpoint prescribed by table A–2. The cross-range boundaries consist of two lines parallel to and to either side of the flight azimuth. Each line is tangent to the upgrade and downrange D_{max} circles as shown in appendix A, figure A–1. Creation of an overflight exclusion zone is predetermined by the requirements of appendix A and does not require a trajectory for an actual launch vehicle. As with an appendix A overflight exclusion zone, and for the reasons described in this notice's discussion of appendix A, the FAA proposes to require that the public be excluded from this area during launch.

Launch Vehicle Trajectory

An applicant must also obtain or generate a launch vehicle trajectory. The applicant may use either commercially available software or a trajectory provided by the launch vehicle's manufacturer. Because appendix B is based on equations of motion in three dimensions, the appendix B analysis requires that the trajectory be described using a three axis coordinate system. The FAA recommends that an applicant used a WGS–84 ellipsoidal earth model [34] as the trajectory coordinate system reference ellipsoid in the appendices, because of its general applicability to the analyses that the FAA proposes in appendices B, C and D, the model's wide availability and its development in accordance with military standards and requirements. The WGS–84 model reflects the most current and the most accurate Department of Defense standards for earth models. WGS–84 provides a basic reference frame and geometric figure for the Earth and provides a means for relating positions on various local geodetic coordinate systems, including XYZ, to an Earth-centered, Earth-fixed coordinate system such as the EFG system employed in the appendix B analysis.

The FAA proposes to require time intervals used in the trajectory analysis of no greater than one second for both launch and downrange areas. Data frequency of one second is a compromise a between the low data frequency requirements of the launch area, where dwell times are relatively long, and the high frequency requirements of the downrange area, where dwell times are correspondingly shorter. Accordingly, one second time intervals are sufficient to accommodate linear interpolation between trajectory time points, in the launch and downrange areas, and not degrade the accuracy requirements of the analysis.

In the launch area, an applicant's trajectory must include position data in terms of time after liftoff in right-handed XYZ coordinates centered on the proposed launch point, with the X-axis aligned with the flight azimuth. In the downrange area, the applicant's trajectory must show state vector data in terms of time after liftoff in right-handed x, y, z, *x, y, z* coordinates, centered on the proposed launch point, with the X-axis aligned with the flight azimuth.

The FAA proposes to require certain technical information to be used to compute an appendix B trajectory. The proposed appendix B parameters comprise the minimum information needed to create a three axis trajectory with 3-degrees-of-freedom (DOF). The 3-DOF are the trajectory positions in each of the three axes of the XYZ coordinate system and it is impossible to adequately describe the launch vehicle position with less than 3-DOF. Any software used to compute a trajectory must incorporate the data required by appendix B, paragraph (b)(1)(ii)(A)–(I).[35]

Launch Area

A launch area contains a launch point and an overflight exclusion zone, and constitutes the part of the flight corridor calculated using the effects of

[34] Department of Defense World Geodetic System, Military Standard 2401 (Jan. 11, 1994).

[35] Software for creating a 3-DOF trajectory with the accuracy required for an appendix B analysis is commercially available.

atmospheric drag forces on debris produced by a series of hypothetical destructions of a launch vehicle at one second intervals along that trajectory. For purposes of an appendix B analysis, a launch area extends from the further uprange of an OEZ arc or dispersion circle arc downrange to a point on the surface of the earth that corresponds to the debris impact locations, assuming a failure of the vehicle in flight at a height of 50,000 feet. Typically, federal launch ranges account for five major parameters to estimate the size of a flight corridor. These include the effects of vehicle-imparted velocity on debris, the change in launch vehicle position and velocity due to a malfunction turn, guidance errors, the ballistic coefficient of debris, and wind. However, imparted velocity, malfunction turn, and trajectory dispersion, although not insignificant, do not play as great a role early in flight as the wind effects on debris. The wind effect on debris, in turn, depends on the ballistic coefficient of the debris. The FAA determined that for purposes of the launch area, of these parameters, launch vehicle debris and meteorological conditions constitute the most significant, and the FAA therefore proposes to focus on these two factors in the launch area.[36]

The FAA proposes to require an applicant to calculate circles that approximate the debris dispersion for each one second time point on a launch vehicle trajectory. The cross-range lines tangent to those circles provide the borders of a launch area. Calculating the circles consists, in general terms, of a two step process. An applicant must first define 15 mean geometric height intervals along the proposed trajectory in order to obtain data, in accordance with subparagraph (c)(4) of appendix B, regarding the mean atmospheric density, maximum wind speed, fall times and debris dispersions in each of those height intervals. An applicant must then use that data in the calculations proposed in subparagraphs (c)(5) to derive the radius applicable to each height interval (Z_i). Having obtained that radius, an applicant uses it to describe, pursuant to subparagraph (c)(6), a circle referred to as a debris dispersion circle (D_i), around each one second time interval along the vehicle's trajectory, starting at the launch point. An applicant will then ascertain the cross-range boundaries of a flight corridor's launch area by drawing lines that are tangent to all dispersion circles. The final D_i dispersion circle forms the downrange boundary of a flight corridor's launch area.

The launch area represents the effects of meteorological conditions on how far inert debris with a ballistic coefficient of 3 lb/ft.^{2} would travel. Debris comes in many sizes and shapes, but the FAA does not propose to require an applicant's location review analysis to take all such possibilities into account. A complete analysis for an actual launch would entail the determination of the type and size of debris created by each credible failure mode, and the velocity imparted to each piece of debris due to the failure. Instead, for purposes of the appendix B analysis, the FAA proposes to categorize launch vehicle debris by a ballistic coefficient that accounts for the smallest inert debris that may cause harm and that also accounts for the debris most sensitive to wind. A ballistic coefficient reflects the sensitivity of weight and area ratios to drag forces, such as wind dispersion effect. The FAA evaluated wind drift effects on a piece of debris with the smallest hazardous ballistic coefficient. A debris piece with the smallest hazardous ballistic coefficient will play the largest role in ascertaining the total debris dispersion in a launch area. Low beta debris, namely, debris with a ballistic coefficient less than or equal to three pounds per square foot, will have a lower terminal velocity than high ballistic coefficient debris and will spend more time being dispersed by wind forces on descent. Therefore, low ballistic coefficient debris will disperse farther than high ballistic coefficient debris. The FAA proposes a debris piece with a ballistic coefficient of three pounds per square foot for launch area calculations because it is the most wind sensitive debris piece with a potential for harm of reasonable significance. Experience at federal launch ranges has shown that, on average, a debris piece that has a ballistic coefficient of less than three pounds per square foot is not significant in terms of its potential to harm a person in the open.

Although the FAA proposes to assume a ballistic coefficient of three as the smallest piece of wind sensitive debris hazardous to the public, ballistic coefficient is not directly related to fatality criteria based on the kinetic energy of debris. The ballistic coefficient of three is related to a kinetic energy of 58 ft/lbs which represents a probability of fatality of 50 percent for a standing person. It is therefore possible that fatalities could occur for a lower ballistic coefficient and that no fatalities may occur for a higher ballistic coefficient. The FAA proposes to incorporate neither of these conditions into this analysis, and invites comment.

In addition to knowing what debris is of concern, an applicant must know the local meteorological conditions. The FAA proposes that an applicant obtain meteorological data for 15 height intervals in a launch area up to 50,000 feet. The FAA proposes an upper limit of 50,000 feet in the launch area containment analysis of debris because winds above this altitude contribute little to drift distance. Also, once a launch vehicle reaches an altitude of 50,000 feet its velocity vector has pitched down range so that a malfunction turn and explosion velocity, rather than atmospheric drag and wind effects, play the dominant role in determining the dispersion of debris as the debris falls to the surface. The combination of these two factors significantly reduces the effect of winds on uprange and crossrange dispersion after a launch vehicle reaches 50,000 feet. For altitudes less than 50,000 feet, at the same time as low ballistic coefficient debris pieces are highly sensitive to drag forces, the velocity of an explosion caused by destroying a launch vehicle contributes relatively little to the dispersion effect because the drag produced on these light weight pieces results in a high deceleration so they achieve terminal velocity almost instantaneously and drift with the wind. Therefore, launch vehicle induced explosion-velocities are not considered for the launch area of an appendix B containment analysis. Instead, the FAA proposes to require an applicant to use local statistical wind data by altitude for fifteen height intervals. The data must include altitude, atmospheric density, mean East/West meridianal (u) and North/South zonal wind (v), the standard deviation of u and v wind, a correlation coefficient, the number of observations and the wind percentile.

Data acceptable to the FAA is available from NOAA's National Climatic Data Center (NCDC). NOAA Data Centers, of which the NCDC is the largest, provide long-term preservation of, management, and ready accessibility to environmental data. The Centers are part of the National Environmental Satellite, Data and Information Service. The NCDC data set acceptable to the FAA is the ''Global Gridded Upper Air Statistics, 1980–1995, CV1.1, March 1996 (CD–ROM).'' The Global Gridded Upper Air Statistics (GGUAS) CD–ROM data set describes the atmosphere for each month of the represented year on a 2.5 degree global grid at 15 standard pressure levels. NCDC provides compiled mean and standard deviation values for sea level pressure, wind

[36] Note that the determination of the size of D_{max} included considerations of malfunction turns as well.

speed, air temperature, dew point, height and density. GGUAS also complies eight-point wind roses. The spatial resolution is a 73×144 grid spaced at 2.5 degrees and the temporal resolution is one month. Monthly data have been statistically combined for the period of record 1980–1995.

To simplify the containment analysis, the FAA proposes to allow an applicant to use a mean wind (50%). The FAA proposes to further simplify the analysis by assuming that an applicant's launch pad height is equal to the surface level of the wind measurements provided by the NCDC data base. The actual pad height could be lower or higher than the surface level wind measurement height. The difference between the actual pad height and the surface level measurement height is considered insignificant in terms of its effect on the impact dispersion radius.

The FAA notes that the NCDC database will not necessarily contain measurements of winds for any particular launch site proposed. If a launch point is located in the center of a 2.5 degree NCDC weather grid cell, the farthest distance to a grid cell corner would be along a diagonal from the center of the grid cell to a corner of the grid cell. The wind measurements will be no more than approximately 106 nm from the launch point. This distance is close enough for purposes of a location review containment analysis, and occurs only for a grid located on the equator. In general, the topography within approximately 106 nm of a launch point is assumed to be relatively similar with respect to height above mean-sea-level. As the launch point latitude increases the distance from the wind measurement grid point will decrease, which will reduce errors introduced by this assumption.

Having obtained the necessary meteorological data, an applicant would use data from the GGUAS CD–ROM to estimate the mean atmospheric density, maximum wind speed, height interval fall times, and height interval debris dispersions for 15 mean geometric height intervals. Altitude intervals are denoted by the subscript ''j''. An applicant would then calculate the debris dispersion radius (D_i) for each trajectory position whose ''Z'' values, are less than 50,000 ft. Each trajectory time considered is denoted by the variable subscript ''i''. The initial value of ''i'' is one and the value is increased by increments of one for each subsequent ''Z'' value evaluated. The major dispersion factors are a combination of wind velocity and debris fall time. Because the atmospheric density is a function of altitude and effects the resultant fall time, D_i is estimated by summing the radial dispersions computed for each altitude interval the debris intersects on its descent trajectory. Once all the debris dispersion radii have been calculated, the flight corridor's launch area is produced by plotting each debris dispersion circle on a map, and drawing enveloping lines that enclose the outer boundary of the debris dispersion circles. The uprange portion of the flight corridor is described by a semi-circle arc that is a portion of either the most uprange D_i dispersion circle, or the overflight exclusion zone, whichever is further uprange. The enveloping lines that enclose the final D_i dispersion circle forms the downrange boundary of a flight corridor's launch area.

Downrange Area Containment Analysis

A containment analysis also describes the dimensions of a flight corridor's downrange area. The FAA designed the downrange area analysis to accommodate launch vehicle imparted velocity, malfunction turns, and vehicle guidance and performance dispersions. The analysis to obtain the downrange area of a flight corridor for guided orbital and suborbital launch vehicle trajectories starts with trajectory positions with heights greater than 50,000 feet, that is, the point where the launch area analysis ends. A downrange area for a guided orbital launch vehicle ends 5,000 nautical miles from the launch point. If an applicant has chosen a guided suborbital launch vehicle for the analysis, the analysis must define the impact dispersion area for the final stage, and that impact dispersion area marks the end of a downrange area.

An applicant computes the cross-range boundaries of the downrange area of a flight corridor by calculating the launch vehicle position after a simulated worst-case four second turn, rotating the launch vehicle state vector to account for vehicle guidance and performance dispersions, and then computing an instantaneous impact point. The locus of IIPs describes the impact boundary.

As a first step, an applicant computes a reduction ratio factor that decreases with increasing launch vehicle range. Secondly, an applicant computes the launch vehicle position after a simulated worst-case four-second malfunction turn for each altitude interval along a trajectory. For purposes of the launch site location review, the FAA proposes to rely on a velocity vector malfunction turn angle set at 45° and to decrease this turn angle using the reduction ratio factor, as a function of downrange distance to simulate the constraining effects of increasing velocity in the downrange direction on malfunction turn capability. See figure B–2. The FAA assumes this worst-case delay result in order to account for the maximum dispersion of the vehicle during the time necessary for a person in charge of destroying a launch vehicle to detect a vehicle failure and cause the vehicle's destruction. Figure B–2 in appendix B depicts the velocity vector movement in the yaw plane of the vehicle body axis coordinate system. The figure below depicts the state vector axes and impact locations for a malfunction turn failure and for an on-trajectory failure.

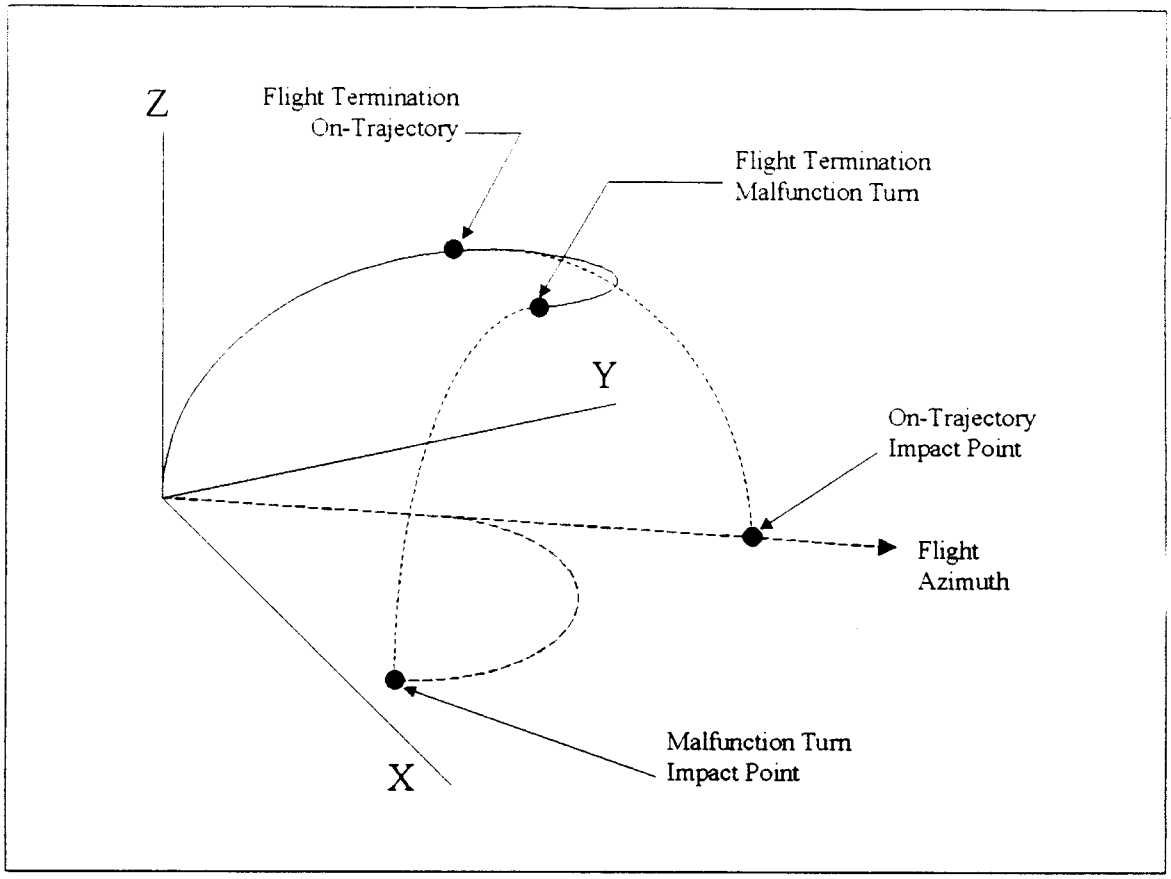

The second step described above assumes perfect performance of the launch vehicle up until the beginning of the malfunction turn. In order, however, to account for normal five sigma (5σ) performance and guidance dispersions of the launch vehicle prior to the malfunction turn, the applicant next rotates the trajectory state vector. The trajectory state-vector rotation is accomplished in conjunction with a XYZ to ENU coordinate system transformation. This transformation rotates the X and Y axes about the Z axis. The Z and U axes are coincident. Both position and velocity components are rotated. The FAA intends the trajectory azimuth rotation to account for the normal 5-sigma launch vehicle performance and guidance dispersions that may exist at the beginning of a malfunction turn. The rotation angle decreases from three degrees to one degree as the vehicle proceeds downrange, and the rate of decrease is a function of distance from the launch point. This is done because the trajectory azimuth of a launch vehicle with 5-sigma performance and guidance dispersions early in flight could be approximately ±3 degrees from the nominal flight azimuth. Since this azimuth offset is not considered a failure response, the guidance, navigation, and control system is expected to achieve steering corrections. These corrections will eventually reduce the angular offset later in flight as the launch vehicle targets the mission objectives for orbital insertion. If a launch vehicle has 5-sigma performance and guidance dispersions later in flight, the effects of increasing velocity in the downrange direction limits a launch vehicle's capability to alter the trajectory's azimuth. Launch vehicles in the four launch vehicle classes were reviewed to determine the typical range of malfunction-turning rates in the downrange area. The FAA found these rates to be relatively small compared to launch area rates. The FAA proposes the three and one degree turn rates because they encompass the turn rates found during the review process.

Before initiating the IIP computations, an applicant must transform the ENU coordinate system to an EFG coordinate system. This EFG coordinate transformation is employed to simplify the IIP computation.

The IIP computation proposed in appendix B are used for demanding the IIPs to either side of a trajectory by creating latitude and longitude pairs for the left and right flight corridor boundaries. Connecting the latitude and longitude pairs describes the boundary of the downrange area of a flight corridor. The launch site location review IIP calculations assume the absence of atmospheric drag effects. Equations B46–B69 implement an iterative solution to the problem of determining an impact point. This iterative technique includes checks for conditions that will not result in impact point solutions. The conditions prohibiting impact solutions are: (1) An initial launch vehicle position below the earth's surface, (2) a trajectory orbit that is not elliptical, but, parabolic or hyperbolic, (3) a positive perigee height, where the trajectory orbit does not intersect the earth, and (4) the iterative solution does not converge. Any one of the conditions given above will prohibit the computation of an impact point. The iterative approach in equations B46–B69 solves these problems.

Software

The FAA has developed a software tool that performs the flight corridor calculations required by appendix B for a guided orbital launch vehicle. The

software was developed in FORTRAN. All of the assumptions and equations contained in appendix B are implemented in the program. An applicant must provide the geodetic latitude, longitude, launch azimuth, desired wind percentile, D_{max} from table A–1 and D_{oez} from table A–2 as input to the program. The software outputs an ASCII text file of geodetic latitudes and longitudes that describe a flight corridor boundary.

Estimating Public Risk

Upon completing a flight corridor, an applicant must estimate the risk to the public within the flight corridor to determine whether that risk falls within acceptable levels. If an applicant demonstrates that no part of the flight corridor is over a populated area, the flight corridor satisfies the FAA's risk thresholds, and an applicant's application may rely on its appendix B analysis. If a flight corridor includes a populated area, an applicant has the option of rotating an appendix B flight corridor using a different launch point or azimuth to avoid population, or of conducting an overflight risk analysis as provided in appendix C.

Appendix C

Under a launch site location review, once an applicant has created a flight corridor employing either appendix A or B, the applicant must ascertain whether there is population within the flight corridor. If there is no population, the FAA will approve the location of the proposed launch point for the type and class of launch vehicle analyzed. If there is population, an applicant must employ appendix C to perform an overflight risk analysis for the corridor. An appendix C risk analysis determines whether or not the risk to the public from a hypothetical launch exceeds the FAA's risk threshold of an estimated expected casualty (E_c) of no more than 30 x 10^{-6} per launch. An appendix C risk analysis estimates the E_c overflight contribution from a single hypothetical launch whose flight termination system is assumed to work perfectly. The analysis takes into account the probability of a vehicle failing throughout its trajectory, dwell times [37] over individual populated areas, and the probability of impact within those areas. The analysis also takes into account the effective casualty area of a vehicle class, the size of the populated area, and the population density of the exposed population.

Estimating E_c for an actual launch takes a large number of variables and considerations into account. The risk analysis provided in appendix C provides a somewhat simpler approach to estimating E_c within the boundaries of a flight corridor than might be necessary in performing a risk analysis for an actual launch. The FAA proposes, for purposes of determining the acceptability of a launch site's location, to rely only on variables relevant to ensuring that the site itself offers at least one flight corridor sufficiently isolated from population for safety. Accordingly, many of the factors that a launch operator will take into account will not be reflected here.

In brief, in order for an applicant to perform an appendix C risk analysis, the applicant must first determine whether any populated areas are present within an appendix A or B flight corridor. If so, the applicant must obtain area and population data. At this point an applicant has a choice. Appendix C requires that an applicant calculate the probability of impact for each populated area, and then determine an E_c value for each populated area. To obtain the estimated E_c for an entire flight corridor, the applicant adds—or sums—the E_c results for each populated area. If the population within the flight corridor is relatively small, an applicant may wish to conduct a less rigorous analysis by making conservative assumptions. Appendix C also offers the option of analyzing a worst-case flight corridor for those flight corridors where such an approach might save time and analysis. Examples of such simplifications are provided.

Identification and Location of Population

In order to perform an E_c analysis, an applicant must first identify the populated areas within a flight corridor. For the first 100 nautical miles from a launch point downrange a U.S. census block group serves as the maximum size of an individual populated areas permitted under an appendix C analysis. The proposed maximum permitted size of an individual populated area beyond 100 nautical mile downrange is a 1 degree latitude x 1 degree longitude grid. The size of that area analyzed will play out differently depending on the location of the proposed launch site. For example, if an applicant proposed a coastal site, the applicant would presumably present the FAA with a flight corridor mostly over water. Population may be limited to that of a few islands, minimizing the amount of data and analysis necessary. If an applicant proposes a launch site located further inland, the applicant would need to obtain the area and population of each census block group in the first 100 nm of the flight corridor. This may prove time consuming, although the FAA has proposed alternative approach that may simplify the process for such applicants. An applicant may also propose to operate a launch site on foreign territory, where U.S. census data would not apply. In that event, the FAA would apply the principles underlying a launch site location review to the available data on a case-by-case basis.

The proposed regulations require the analysis of populations at the census block group level for the first 100 nm from the launch point in the flight corridor. An applicant shall employ data from the latest census.[38] An applicant must also include population that may not be included in the U.S. census, such as military base personnel. The FAA recognizes a census block group to be a reasonable populated area for analysis because the risk early in flight is greatest due to long dwell times. IIP range rates in a launch area are relatively show, which exposes the launch area populations to launch vehicle risks for a longer period of time when compared to similar populations in the downrange area. Depending on the launch site and launch vehicle, a census block group could be exposed to launch vehicle risks for tens of seconds. In contrast to the size of a populated area in the downrange area, the increased risk due to longer dwell times requires a more detailed evaluation of the launch area for E_c purposes. A census block group is an appropriate size for analysis because it is small enough to accommodate the assumption that a populated area contains homogeneously distributed population without grossly distorting the outcome of the E_c estimates, and because the data is readily available for populations in the United States. Although a census block is smaller and therefore even more accurate, only census block centroids, rather than the more useful geographic area, are available from the U.S. Census Bureau. The FAA also proposes to allow the census block group to serve as the smallest unit addressed because electronic data is available at the census block group level, which will allow for more efficient execution of the computations. Although not as accurate as a census block, a census block group is also sufficiently accurate to serve as

[37] Although an applicant who calculates an appendix B flight corridor will know actual dwell times for its E_c analysis, the FAA proposes to supply a constant to approximate dwell time for an applicant who relies on an appendix A flight corridor.

[38] Some geographic information software has the capacity to import U.S. Census Bureau demographic and geographic data.

the smallest populated area for a launch site location review because the launch licensing process will mandate the more thorough risk analysis necessary for a particular launch. An applicant may find the need to use only a portion of a census block group, such as when a populated area is divided by a flight corridor boundary. In that case an applicant should use the population density of the block group to reflect the population in that portion of the census block group.

FAA proposes to allow an applicant to evaluate the presence of people in larger increments of area in the downrange area of a flight corridor than in the launch area of a flight corridor. Populations in the downrange area of a flight corridor must be analyzed in area no greater than 1° x 1° latitude and longitude grid coordinates. Because dwell times downrange are shorter, the risk to the individual populated areas is less and, therefore, the FAA is willing to accept a different degree of accuracy. IIP range rates in the downrange area can achieve speeds of 500 nm/second. Because the longest distance in a grid space would be approximately 85 nm for a grid on the equator, which is where the largest grid area will be found, the launch vehicle IIP dwell time would be less than 0.20 seconds over the grid. This reduces the risk to population in that grid significantly compared with population in the launch area.

The data needed for a downrange area analysis is also readily available. One source for population data in an area no greater than 1° x 1° latitude and longitude grid coordinates in a database of the Carbon Dioxide Information Analysis Center (CDIAC), Oak Ridge National Laboratory. The CDIAC database is ''Global Population Distribution (1990), Terrestrial Area and Country Name Information on a One by One Degree Grid Cell Basis.'' This database contains one degree by one degree grid information on the world-wide distribution of population for 1990 and country specific information on the percentage of a country's population present to each grid cell.

The CDIAC obtained its population estimates from the United Nations FAO Yearbook,[39] the Guinness World Data Book,[40] and the Rand McNally World Atlas [41] for approximately 6,000 cities with populations greater than 50,000 inhabitants. The population data was updated by CDIAC to 1990 values with available census data. For the rural population allocation, the CDIAC developed global rural population distribution factors based on national population data, data on approximately 90,000 cities and towns, and the assumption that rural population is proportional to the number of cities and towns within each grid cell for each country.

Probability of Impact

The next step in the process would be to ascertain the probability of impact for each populated area. In other words, an applicant must find the probability that debris will land in each populated area within the flight corridor under analysis. For this, the applicant must find the probability of impact in both the cross-range and downrange directions, by employing equation C1 for an appendix A flight corridor for an orbital launch or equations C2 through C4 for an appendix A corridor that describes a suborbital launch. For an analysis based on an appendix B flight corridor, an applicant will employ equation C5 for an orbital launch or equations C6 and C8 for a suborbital launch. For both appendix A and B corridors, the probability of impact (P_i) within a particular populated area is equal to the product of the probability of impact in the downrange (P_x) and cross range (P_y) directions, and the probability of vehicle failure (P_r).

$$P_i = P_y * P_x * P_f$$

The analysis applicable to both appendix A and B flight corridors is the same for the cross-range direction,[42] but employs a different equation to determine the probability of impact in the downrange direction. For an appendix A corridor, the FAA proposes to specify a constant in equation C1 to approximate dwell time for the downrange direction. In equation C5 an applicant will employ actual dwell times obtained from the trajectory generated pursuant to appendix B.

[42] For Equations C–1, C–3, C–5 and C–7 the FAA approximated the probability of impact in the cross-range direction (P_y) by applying Simpson's Normal Probability Function. The FAA employed Simpson's rule to derive the following equation:

$$P_y = \frac{\left(\frac{|y_2 - y_1|}{\sigma_y}\right)}{6\sqrt{2\pi}} \cdot \left(\exp\left(\frac{-\left(\gamma_1 / \sigma_\gamma\right)^2}{2} \right) + 4 \cdot \exp\left[\frac{-\left(\frac{y_1 + y_2}{2\sigma_y}\right)^2}{2} \right] + \exp\left(\frac{-\left(\gamma_2 / \sigma_\gamma\right)^2}{2} \right) \right)$$

Simpson's approximation of the Elliptical Normal Probability Function is described in General Motors Corporation Defense System Division's Elliptical Normal Probability Function, (Apr. 6, 1960).

An applicant who relies on an appendix A flight corridor will use equation C1 to determine the probability of impact for a particular populated area in the downrange direction by finding the range rate and assuming a total thrusting time of 643 seconds. Equation C1 reflects the fact that appendix A does not employ trajectory data, and therefore, employs a technique for estimating dwell times as a function of range and range rate to determine the probability of impact in the downrange direction. Proposed table C–2 provides the appendix A flight corridor IIP range intervals and corresponding IIP range rates for use in Equation C1.

To create proposed table C–2, the FAA employed actual trajectory data to determine individual range rates for Atlas, Delta and Titan launch vehicles. The FAA computed the IIP for each trajectory time point, and the range rates were determined by subtracting IIP ranges (RIIP) over one-second intervals. This provided a per second range rate, referred to below at R-dot. The average range rates over the range intervals, shown in the table below, were estimated by dividing the difference of

[39] United Nations FAO Yearbook, Vol. 47, Rome, 1993.

[40] The Guinness World Data Book, Guinness Pub. Ltd., Middlesex, England, 1993.

[41] Rand McNally World Atlas, Rand McNally, New York, 1991.

[42] See above text for footnote 42

the upper value of adjacent IIP ranges by the elapsed trajectory time over the range interval. For example, the following Delta launch vehicle data was used to determine the IIP range rate from 101 through 500 nm:

RIIP1 = 100 nm
TALO1 (time after lift-off 1) = 97 sec
RIIP2 = 500 nm
TALO2 = 217 sec
(RIIP2 − RIIP1) (TALO2 − TALO1) = 3.33 nm/s

The FAA derived the total average thrusting time of 643 seconds from the data in table 5 by dividing the difference of the upper value of adjacent IIP ranges by the average IIP range rate corresponding to the largest IIP range and summing the results over the set of IIP ranges. The following computations are given as examples of how the FAA reached this determination.

Let:
RIIP1 = 100 nm
RIIP2 = 500 nm
R-dot = 3.00 nm/s
(RIIP2 − RIIP1)/R-dot = 133.33 sec

TABLE 5.—DATA TO DERIVE TOTAL THRUSTING TIME

IIP range (nm)	IIP range rate (nm/s)				Δt(s)
	Delta	Atlas	Titan	Avg.	
0–100	1.03	085	0.96	0.91	110.50
100–500	3.33	3.77	2.23	3.00	133.33
500–1500	4.27	3.66	2.73	3.20	312.99
1500–2500	9.01	21.74	12.99	17.37	57.59
2501–3000	33.33	50.00	41.67	45.84	10.91
3001–4000	66.67	90.91	83.33	87.12	11.48
4001–5000	166.67	142.86	166.67	154.77	6.46
Total-Δt					643.26

The ''X'' distances were measured directly off the mapping information source.

An applicant who relies on an appendix B flight corridor will employ proposed equation C5 or equations C6 through C8 depending on whether the flight corridor culminates in an impact dispersion area or not. Equation C5 reflects the fact that, unlike an appendix A flight corridor, the trajectory data used to create an appendix B flight corridor provides downrange instantaneous impact points (IIPs). Accordingly, the dwell time associated with a populated area may be ascertained for the difference between the closest and furthest downrange distances of the populated area. *See* figure C–2.

An applicant may find the following six step procedure helpful in determining the dwell time for individual populated areas that equation C5 calls for. The subscripts to not correspond to subscripts in the appendix.

Step 1: Determine the trajectory time (t_1) associated with the trajectory IIP position (x_1), that immediately precedes the uprange point on the populated area boundary. This is a accomplished by locating the IIP points in the vicinity of the populated area, drawing lines normal to the trajectory IIP ground trace, and choosing the trajectory time for the IIP point whose normal is closest to the uprange boundary of the populated area but does not intersect it. The distance from the launch point to x_1 may be determined using the range and bearing equations in appendix A, paragraph (b).

Step 2: Determine the trajectory time (t_2) associated with the trajectory IIP position (x_2) that just exceeds the downrange point on the populated area boundary. This is accomplished by locating the IIP point in the vicinity of the populated area, drawing lines normal to the trajectory IIP ground trace, and choosing the trajectory time for the IIP point whose normal is closest to the downrange boundary of the populated area but does not intersect it. The distance from the launch point to x_2 may be determined using the range and bearing equations in Appendix A, section (b).

Step 3: Determines the average IIP range rate (R) for the flight period determined in Steps 1 and 2 above.

$$\bar{R} = \frac{(x_2 - x_1)}{(t_2 - t_1)} \text{ (units in nm / s)}$$

Step 4: Determine the distance along the nominal trajectory to the uprange point (x_3) on the populated area boundary. This is accomplished by drawing a line normal to the trajectory IIP ground trace and tangent to the uprange boundary of the populated area, and determining the distance along the nominal trajectory IIP ground trace from the launch point to the intersection of the normal and the ground trace.

Step 5: Determine the distance along the nominal trajectory to the downrange point (x_4) on the populated area boundary. This is accomplished by drawing a line normal to the trajectory IIP ground trace and tangent to the downrange boundary of the populated area, and determining the distance along the nominal trajectory IIP ground trace from the launch point to the intersection of the normal and the ground trace.

Step 6: The dwell time (t_d) is estimated by the following equation.

$$t_d = \frac{(x_4 - x_3)}{\bar{R}} \text{ (units in seconds)}$$

For either type of flight corridor, an applicant determines the probability of impact in the cross range direction, (P_y), through a series of steps, of which the first is measuring the distance from the nominal trajectory IIP ground trace to the closest and furthest points in the cross range direction of the area that contains population. The populated area may consist of a census block group or a 1 degree latitude by 1 degree longitude grid. *See* figure C–1. To determine the distribution of the debris pattern in that populated area, the applicant needs to estimate the standard deviation of debris impacts. The FAA proposes that, for purposes of an appendix C analysis, that the cross-range boundaries of a flight corridor represent five standard deviations 5δ of all debris impacts form normal and malfunction trajectories.[43] To apply this to a populated area, an applicant must first find the distance

[43] Five sigma should represent 99.9999426% of all debris impacts from normal and malfunction trajectories assuming a functioning FTS. The one-sided-tail percentage area under the Gaussian Normal Probability curve beyond five-sigma is approximately 0.000000287%. Since the normal curve is symmetric this value can be doubled and subtracted from one (1) to determine the percentage area between the plus-and-minus five sigma limits. This results in the 99.9999426% value. *See,* Frederick E. Croxton, *Elementary Statistics with Applications in Medicine,* 323 (1953).

from the nominal trajectory to the cross-range boundary, measured on a line normal to the trajectory through the geographic center of the populated area, and then divide that distance by five.

Finally, the probability of failure is also an element in calculating the probability of impact. The FAA proposes for the launch site location analysis to assign a failure probability (P_f) constant of P_f=0.10 for guided launch vehicles. This represents a conservative estimate of the failure percentage of current launch vehicles, since many current launch vehicles are more reliable. The appendix C process assumes that the probability of impacting within the corridor is one, and the probability of impacting outside the corridor is zero. The flight termination system is assumed to function perfectly in all failure scenarios.

A final variation on computing the probability of impact for a particular populated area is used when computing the probability of impact (P_i) within the impact dispersion area of a guided suborbital launch vehicle. In this case, the probability of success (P_s) is substituted for the probability of failure (P_f), and an applicant shall employ a method similar to that used in appendix D to calculate the probability of impact for any populated areas inside the impact dispersion area. This divergence, the use of probability of success rather than probability of failure, from the variable used for an orbital launch vehicle arises out of the relative risk associated with an impact dispersion area of a guided suborbital launch vehicle. The same risks associated with a guided orbital launch are also associated with a guided sub-orbital launch except for the final stage of the guided suborbital mission, which is intended to return to earth rather than to enter orbit. On the basis of past history, the FAA has concluded that the final stage has a high reliability and will impact in the designated impact dispersion area, as intended from a successful mission. The FAA intends through its proposed launch site location review to analyze high risk events, and because the risk due to a planned impact in the dispersion area would be much higher than an unplanned impact, the FAA proposes to use P_s inside the impact dispersion area rather the P_f for determining the probability of impact in a guided suborbital launch vehicle's impact dispersion area.[44]

[44] The actual probability used in the analysis is 0.98.

Totaling Risk of All Populated Areas in Flight Corridor

The E_c estimate for a flight corridor is a summation of the risk to each populated area and results in an estimate of E_c inside the corridor, E_c (Corridor). This means that an applicant would estimate E_c for each individual populated area within a flight corridor, using the following equation:

$$E_{ck} = P_i \cdot \left(\frac{A_c}{A_k}\right) \cdot N_k$$

P_i is the probability of hitting the populated area. A_C is the effective casualty area of the vehicle and may be obtained from table C–3. A_k is the area of the populated area. N_k is the population in A_k, and is obtained from census data. The label ''k'' is used to identify the individual populated area. The summed E_c for all populated areas added together is the E_c (Corridor).

The FAA proposes to require an applicant to use an effective casualty area specific to a launch vehicle class and range when performing the E_c calculation. An effective casualty area (A_c) means the aggregate casualty area of each piece of debris created by a launch vehicle failure at a particular points on its trajectory. The casualty area for each piece of debris is the area within which 100 percent of the unprotected population on the ground is assumed to be a casualty. This area is based on the characteristics of the debris piece including its size, the path angle of its trajectory, impact explosions, and debris skip, splatter, and bounce. In each of the vehicle classes, the A_c decreases, resulting in a smaller casualty area, as a function of distance downrange because vehicle size and explosive potential decreases as explosive propellant is consumed and expended stages are ejected during vehicle flight.

An effective casualty area is a function of time-after-liftoff is proposed in table C–3 for launch vehicle classes listed in table 1 of § 420.21. The FAA derived the effective casualty areas in table C–3 from DAMP, a series of risk estimation computer programs used at federal launch ranges, to evaluate the vehicle classes described in table 1, § 420.21. DAMP considers other factors besides debris characteristics, such as the size of a standing person, which increases the casualty area, and sheltering, which would tend to decrease the casualty area. Because considering sheltering has a greater effect than considering the size of a standing person, and was not assumed in table C–3, the effective casualty areas in table C–3 are conservative.

An applicant calculates casualty expectancy for each populated area within a flight corridor. After the casualty expectancies have been estimated for all populated areas, the E_c values are summed to obtain the total corridor risk. The total is multiplied by two to estimate the final value for E_c(Corridor). The FAA is proposing this multiplier to account for the error introduced by the risk estimation approach of the launch site location review. Both the method used to construct a flight corridor and the method used to analyze risk contributes error. For example, an appendix A flight corridor is not based on actual wind data, and even though its size is conservative in nature, this size alone can cause the risk to be underestimated in appendix C. In other words, what the analysis gains in conservatism with the greater size of an appendix A corridor it may, on occasion, lose in conservatism due to the corresponding decrease in population density relative to an appendix B corridor. Conversely, an appendix B corridor, which may result in a higher E_c total due to the greater density attributable to the smaller corridor, may not encompass a populated area that would otherwise be analyzed for risk as part of an appendix A corridor. In addition, these calculations do not account for any secondary effects such as fire and collapsing structures that may result from impacting debris. Accordingly, to compensate for these inherent discrepancies, a safety factor is advisable in order to guard against licensing the operation of a launch site which may never be able to support a licensed launch. Also, an appendix B flight corridor is based on a number of approximations, including the descent rate of a piece of debris, the variability of a nominal launch vehicle trajectory prior to a failure, and a malfunction turn. Both the appendix A and B flight corridors for orbital launch vehicles end at 5,000 am, leaving out a large area of overflight, albeit with an IIP with very high velocity and extremely small dwell times. Additionally, the E_c analysis in appendix C itself can underestimate risk to the population within a flight corridor due to certain approximations, including the probability of impact in the cross-range direction (P_y), which uses Simpson's approximation of the Elliptical Normal Probability Function, and the determination that the width of a flight corridor is assumed to represent a 5-sigma normal distribution. Cities present in a flight corridor can also cause the risk to be underestimated because the appendix C method

averages population over areas that may be as large as a $1° \times 1°$ grid. Perhaps the most important factor in contributing to possible error is the fact that the proposed location review assumes a perfectly functioning flight termination system. Accordingly, the FAA has chosen a multiplier of two to balance its intent to only approve launch sites that are safe for the launches intended to be launched from the launch site, and to minimize the burden on applicants.

The FAA will not approve the proposed launch site location if the estimated expected casualty exceeds 30×10^{-6}. An applicant may either modify its proposal, or if the flight corridor used was generated by the method proposed in appendix A, use the typically less conservative but more accurate method proposed in appendix B to narrow the flight corridor and perform another appendix C overflight risk analysis. An applicant may employ specified variations to the analysis described above. Six variations are identified in appendix C. The first four variations permit an application to make conservative assumptions that would lead to an overestimation of the corridor E_c compared with the more detailed process described. Although appendix C's approach simplifies a typical launch safety analysis somewhat by providing conservative default parameters to use, it may also prove unnecessarily complex for applicants proposing launch sites with launch corridors encompassing extremely few people. For those situations, appendix C provides the option for an applicant to further simplify the estimation of casualty expectancy by making worst-case assumptions that would produce a higher value of the corridor E_c compared with the analysis defined in appendix C, subparagraphs (c)(1)–(8). This may be particularly useful when an applicant believes E_c is well below the acceptable value.[45]

These variations would allow an applicant to assume that P_x and P_y have a value of 1.0 for all populated areas, or combine populated areas into one or more larger populated areas and use the greatest population density of the component populated areas for the combined area or areas. An applicant may also assume P_y has a value of one for any given populated area, or, for any given P_x sector, assume P_y has a value of one and use a worst case population density for the sector. A P_x sector is an area spanning the width of a flight corridor and bounded by two time points on the trajectory IIP ground trace. All four of these reduce the number of calculations required for applicants with little population within a flight corridor.

Another option, permitted in appendix C, is for an applicant who would otherwise fail the baseline analysis to perform a more refined E_c analysis by negating the baseline approach's overestimation of the probability of impact in each populated area. If the flight corridor includes populated areas that are irregular in shape, the equations for probability of impact in appendix C may cause E_c to be overestimated. This is because the result of the P_i computation for each populated area represents the probability of impacting within a rectangular area that bounds the populated area. As shown in figure C–1 in appendix C, the length of two sides of the rectangle would be $x_2 - x_1$, and the length of the other two sides would be $y_2 - y_1$. Populated areas used to support the appendix C analysis must be no bigger than a U.S. census block group for the first 100 nautical miles from a launch point and no bigger than a 1 degree latitude $\times$ 1 degree longitude grid ($1° \times 1°$ grid) beyond 100 nautical miles downrange. Whether the populated area is a census block group, a $1° \times 1°$ grid, or a land mass such as a small island, it will not likely be a rectangle. Even a $1° \times 1°$ grid near the equator, which approximates a rectangle, will not line up with the trajectory ground trace. Thus, a portion of the P_i rectangle includes area outside the populated area being evaluated. The probability of impacting in the rectangle is higher than impacting just in the populated area being evaluated. The value of the probability of impact calculated in accordance with appendix C will thus likely be overestimated.

One approach permitted in appendix C is to divide any given populated area into smaller rectangles, determine P_i for each individual rectangle, and sum the individual impact probabilities to determine P_i for the entire populated area. A second approach permitted in appendix C is, for a given populated area, to use the ratio of the populated area to the area of the original P_i rectangle.

If the estimated expected casualty still exceeds 30×10^{-6}, the FAA will not approve the proposed launch site location. In that event, the only remaining options for an applicant would be to rely on one of its potential customers obtaining a launch license for launch from the proposed site.

The FAA considered the option of increasing the accuracy of appendix C by employing a procedure that ensures individual populated areas have homogeneous population densities. The FAA considered this because the probability of impact equations in appendix C can cause the E_c for an individual populated area to be underestimated when unequal population densities occur within the area. This can occur, for example, when a populated area contains one or more densely populated cities interspersed with large land mass areas with rural population. The proposed E_c equation distributes the population evenly throughout the populated area. Accordingly, the E_c may be somewhat underestimated or over-estimated for portions of the populated area. The FAA considered requiring applicants to use smaller areas with homogeneous population densities in order to more accurately estimate the E_c, but chose not to because any error should be accounted for with the multiplier of two discussed above.

Appendix D

Appendix D contains the FAA's proposed method for determining the acceptability of the location of a launch site for launching unguided suborbital launch vehicles. Appendix D describes how to define an overflight exclusion zone and each impact dispersion area to be analyzed for risk for a representative launch vehicle. Proposed appendix D also describes how to estimate whether risk to the public, measured by expected casualty, falls within the FAA's threshold of acceptable risk. In short, the proposed approach requires an applicant to define an overflight exclusion zone around a launch point, determine the impact point for each spent stage and then define an impact dispersion area around each impact point. If populated areas are located in the impact dispersion areas and cannot be excluded by altering the launch azimuth, the FAA would require a risk analysis that demonstrates that risk to the public remains within acceptable levels.

As a first step, an applicant would select which launch points at the proposed launch site would be used for the launch of unguided suborbital launch vehicles. An applicant must also then select an existing launch vehicle, for which apogee data is available, whose final stage apogee represents the maximum altitude of any intended unguided suborbital launch vehicle intended for launch from that launch point. The applicant would then plot the distance, which is referred to as the

[45] The purpose of the E_c analysis as part of the launch site location review is not to determine a value of E_c but rather to confidently demonstrate that E_c is less than the acceptable threshold value.

impact range, from the launch point to the nominal impact point on the azimuth for each stage. Employing the impact dispersion radius of each stage, the applicant would define an impact dispersion area around each nominal impact point.

The FAA's proposed methodology for its proposed impact dispersion area requirements is grounded in three assumptions which reflect current practice. For purposes of this location review, the FAA assumes that unguided suborbital launch vehicles are not equipped with a flight termination system, and that public risk criteria are accordingly met through the implementation of a wind weighting system, launch procedures and restrictions, and the proper selection of a launch azimuth and elevation angles.[46] These aspects are currently reflected in FAA guidelines and will be addressed in its regulations for launches from non-federal launch sites. The cumulative launch experience in unguided suborbital launch vehicles demonstrates that risk to the public from launches of these vehicles is attributable to planned stage impact during a successful flight. Controlling these risks solely through measures implemented prior to flight rather than relying on active measures during flight, as is the case for a vehicle equipped with an FTS, has proved historically an acceptable approach to assuring protection of the public. Accordingly, the appendix D analysis should adequately address the general suitability of each launch point for unguided suborbital launch vehicle launches up to the altitude proposed. Operational requirements imposed on a launch licensee through license conditions should adequately address risks posed by the actual launch of unguided suborbital launch vehicles.

The proposed location review for a launch point that will support unguided suborbital launch vehicles also assume that intermediate and final stages impact the earth within five standard deviations 5σ of each nominal, no wind, impact point. This means that an appendix D analysis does not account for failures outside of five standard deviations from each intended impact point.

It also means that an appendix D analysis does not simulate an actual launch in actual wind conditions. For actual launches, wind weighting can be used to obtain the nominal, no wind, impact point for the final stage only. In order to ensure that the launch meets E_c, ship hit, and aircraft hit probabilities, launch operators compute the wind drifted impact points of all stages using the launcher settings determined through wind weighting so that intermediate stage impacts are determined prior to launch. Although appendix D does not address this fact directly, it does show that at least some launches can be conducted depending on the wind conditions.

Defining an Overflight Exclusion Zone and Impact Dispersion Areas

The areas an applicant will analyze for risk to the public posed by the launch of an unguided suborbital launch vehicle consist of an overflight exclusion zone and state impact dispersion areas. Having selected a launch point and a launch vehicle for which empirical data is available, an applicant defines each zone and area using the methodology provided. An overflight exclusion zone shall consist of a circle with a radius of 1600 feet centered on a launch point. An overflight exclusion zone is the area which must be free of the public during a launch. Creation of each impact dispersion area involves several more steps. For each stage of the analyzed vehicle an applicant must identify the nominal stage impact point on the azimuth where the stage is supposed to land, and draw a circle around that point, using the range and bearing equations of appendix A or GIS software. That circle describes the impact dispersion area, and an applicant defines an impact dispersion area for each stage.

An applicant must at the outset provide the geodetic latitude and longitude of a launch point that is proposes to offer for launch, and select a flight azimuth. Once an applicant has selected a launch point location and azimuth, the next step is to determine a 1600 foot radius overflight exclusion zone for that launch point. As with an overflight exclusion zone created pursuant to appendices A and B, an applicant must show that the public would be cleared from its overflight exclusion zone prior to launch. Although suborbital vehicles have a very low likelihood of failure, failure is more likely to occur in the early stages of the launch. Consequently, the FAA proposes to guard against that risk through requiring an applicant to show the ability to evacuate an overflight exclusion zone. As with the flight corridors of appendices A and B, the FAA proposes to base the size of the overflight exclusion zone on the maximum distance that debris is expected to travel from a launch point if a mishap were to occur very early in flight. The FAA has estimated the D_{max} for an unguided suborbital launch vehicle, and the result is 1600 feet. Accordingly, an applicant would define an appendix D overflight exclusion zone as a circle with a radius of 1600 feet.

Because an applicant must choose the maximum latitude anticipated of a

[46] The flight safety program of an unguided suborbital launch vehicle without a flight termination system typically takes place and is concluded prior to flight. A launch operator achieves flight safety by implementing a flight based on launch vehicle performance parameters, launch vehicle dispersion parameters and other sources of error, such as wind measurement errors. A launch operator will offset the effects of winds measured on the day of launch by adjusting the azimuth and elevation of the launch vehicle's launcher accordingly. The methodology for correcting for actual wind conditions on the day of launch is called wind weighting. The products of a wind weighting analysis determine launcher azimuth and elevation settings that correct for wind effects on an unguided launch vehicle.

During preflight planning a launch operator determines launch vehicle dispersion, which is the potential change in the location of impact, by modeling the known causes of systematic errors. Variations in thrust, stage weight, payload weight and stage ignition time may produce errors, and will typically be included in any error model. Thrust misalignment, and the misalignment of nozzles or fins must also be modeled because of their capacity to contribute to error. A model also incorporates the error created by separation of the launch vehicle from the launcher, and accounts for any errors in motor impulse, drag estimate and launcher setting. Most significantly, a model analyzes wind error. Wind error modeling accounts for the measurement errors in the measuring system employed and the time elapsed between the time of measurement and the time of launch. Once these elements have been determined, wind error will be incorporated into the model to obtain the predicted impact points and total launch vehicle dispersion.

Historically, one of three methods have been used to correct for actual wind conditions on the day of launch. Both NASA at Wallops Flight Facility and the US Army at White Sands Missile Range have developed and improved methods of predicting the wind effects over the years. The three wind weighting methods that have evolved include: (1) The manual method, (2) the Lewis method, and (3) the 5-Degree-Of-Freedom (DOF) method. The difference between the methods is one of complexity and accuracy. The manual method is the least complex, but produces the largest error. The 5-DOF method is the most complex, produces the least error, and is currently employed by safety offices at Wallops Flight Facility and White Sands Missile Range.

Each of the wind weighting methods produce launch vehicle elevation and azimuth settings. Other launch factors that play a role, however, may be necessary to ensure the wind weighting solutions are within the assumptions made in the pre-flight dispersion analysis. These factors may include the required height and period of wind measurements, limitations on the maximum ballistic wind and wind variability at which launch would be permitted, and a determination regarding maximum launcher setting angles.

The FAA derived the methods for defining an impact dispersion area proposed in appendix D by assuming that a launch operator would use a 5-DOF method of wind weighting. This does not preclude an applicant for a launch license from using another wind weighting method to develop impact dispersion areas, but the FAA proposes to address such issues in a rulemaking concerning launch licensing requirements.

suborbital launch vehicle for launch from its site, an applicant needs to acquire the apogee of each stage of a representative vehicle. An applicant need not possess full information regarding a specific representative launch vehicle. All that is necessary is the apogee of each stage. The apogee height must be obtained from an actual launch conducted at an 84° elevation angle. If needed, data is available from the FAA. The FAA has compiled apogee data from past launches from Wallops Flight Facility for a range of launch vehicles and payloads. This data will be provided to an applicant upon request and may be used to perform the analysis.

An applicant then defines impact dispersion areas for each stage's nominal impact point. Having selected a launch vehicle most representative of what the applicant intends for launch from the proposed launch point, an applicant will use either its own empirical apogee data or data from one of the vehicles in the FAA's data base. Whether an applicant uses vehicle apogee data obtained from the FAA or from elsewhere, the applicant must employ the FAA's proposed range and dispersion factors to determine the location of each nominal impact point and the size of each impact dispersion area.

The FAA proposes a means of estimating the distances of both an impact range and an impact dispersion radius. Under proposed appendix D, an applicant would estimate the impact range and dispersion parameters by multiplying the apogee of a launch vehicle intended for the prospective launch site by the FAA's proposed factors. The FAA proposes impact range and impact dispersion factors, which it derived from launch vehicle pedigrees of sounding rockets used by NASA Wallops Flight Facility in its sounding rocket program.[47] The proposed factors provide estimators of staging data for an unguided vehicle launched at a standard launcher elevation, which is the angle between the launch vehicle's major axis (x) and the ground, of 84°. the appendix defines the relationship between the apogee of a launch vehicle stage, an impact range and a 5σ dispersion radius of a stage. This relationship is expressed as two constants, which vary with the altitude of the apogee, an impact range factor and an impact dispersion factor.

[47] These vehicles include Nike Orion, Black Brant IX, Black Brant XI, and Black Brant XII. They are representative of the current launch vehicle inventory and should approximate any proposed new launch vehicle.

To locate each nominal impact point, an applicant will calculate the impact range for the final stage and each intermediate state. An impact range describes the distance between an applicant's proposed launch point and the nominal impact point of a stage, or, in other words, its estimated landing spot along the azimuth selected for analysis. For this estimation, an applicant would employ the FAA's proposed impact range factors of 0.4 or 0.7 as multipliers for the apogee of the stage. If an apogee is less than 100 kilometers, the applicant shall employ 0.4 as the impact range factor for that stage. If the apogee of a stage is 100 kilometers or more, the applicant shall use 0.7 as a multiplier. In plotting the impact points on a map, an applicant shall employ the methods provided in appendix A.

An impact dispersion radius descries the impact dispersion area of a stage. The FAA proposes to rely on an estimated impact dispersion radius of five standard deviations 5σ because significant population, such as a densely populated city, in areas within distances up to 5σ of the impact point could cause significant public risk. An applicant shall obtain the radius of the impact dispersion area by multiplying the stage apogee by the FAA's proposed impact dispersion factor of 0.4 for an apogee less than 100 kilometers and of 0.7 for an apogee of 100 kilometers or more. The final stage would typically produce the largest impact dispersion area.

Once an applicant determines the impact dispersion radii, the applicant must plot each impact dispersion area on a map in accordance with the requirements of paragraph (b). This is shown in figure D–1. An applicant may then determine if flight azimuths exist which do not affect populated areas. If all potential flight azimuths contain impact dispersion areas which encompass populated areas, then the FAA would require an E_c estimation of risk.

Public Risk E_c Estimation

The FAA will approve a launch point for suborbital launch vehicles if there exists a set of impact dispersion areas for a representative launch vehicle in which the sum of risk to the public does not exceed the FAA's acceptable risk threshold. An overflight exclusion zone must contain no people. If a populated area is present within the impact dispersion areas, the proposed rules require an applicant to estimate the risk to the public posed by possible stage impact. An applicant must then determine whether its estimated risk satisfies the FAA requirement of an E_c of no more than 30×10^{-6}. The E_c estimation is performed by computing the sum of the risk for the impact of each stage and accounting for each populated area located within a 5σ dispersion of an impact point. The equation used to accomplish this is the same as that used in the impact probability computation in appendix C. Unlike, however, the method in appendix C, which accounts for an impact due to a failure, the probability of a stage impact occurring is $P_s = 1\text{-}P_f$, where P_s is the probability of success, and P_f is the probability of failure. The FAA proposes, for the purposes of the launch site location review, a constant of 0.98 for the probability of success for unguided suborbital launch vehicles. The probability of success is used in place of P_f in calculating both the cross-range and downrange probability of impact.

The proposed location review for launch points intended for the launch of unguided suborbital launch vehicles differs from the approach proposed for reviewing the location of launch points intended for the launch of guided orbital and suborbital launch vehicles. In analyzing whether risk remains at acceptable levels, E_c equations in appendix D rely on the probability of success rather than the probability of failure. The use of stage impact probability, typified as the probability of success (P_s), for suborbital launch vehicles is necessary because stage impacts are high probability events which occur near the launch point with dispersions which may overlap or be adjacent to the launch point. The difference between the methods of appendices A, B and C and that proposed in appendix D reflects the fundamental differences between the likely dominant source of risk to the public guided and unguided vehicles and the methods that have been developed for guarding public safety against the risks created by each type of vehicle. In other words, the methods for defining impact dispersion areas and for conducting an impact risk assessment for an unguided vehicle are premised on the risks posed by a successful flight, that is, the planned deposition of stages and debris. In contrast, the methodology for developing a flight corridor and associated risk methodology for guided vehicles assumes that the likely major source of risk to the public arises out of a failure of a mission and the ensuing destruction of the vehicle. Failures are less probable and debris impacts are spread throughout a flight trajectory.

The high degree of success recorded for unguided launch vehicles renders

the probability of success the greater source of risk. Because of their relative simplicity of operation, the failure rate, over time, for unguided launch vehicles is between one and two percent. At this level of reliability, the FAA believes that its primary focus of concern for assessing the safety of a launch site should be the more likely event, namely, the public's exposure to the planned impact of vehicle stages and other vehicle components, such as fairings, rather than the risk posed by exposure to debris resulting from a failure. Success is the high risk event. Although failure rates are low for unguided launch vehicles, their spent stages have large impact dispersions. Moreover, the FAA's proposed impact dispersion area estimations generally produce impact dispersion areas large enough to encompass most of the populations exposed to a possible failure as well as to a nominal flight, thus ensuring the inclusion of any large, densely populated area in the analysis. Thus, all but a small percentage of populated area will be analyzed to some extent, albeit using impact probabilities based on success. This fact plus a multiplier of five should provide a reasonable, conservative estimation of the risks associated with the launch point.

This is true of unguided sub-orbital launch vehicles because their impact dispersions are much larger than those for guided vehicles and they occur closer to the launch point.

In appendix D, the FAA assumes that the stage impact dispersion in both the downrange and cross range directions are equal. This is a valid assumption for suborbital launch vehicle rockets because their trajectories produce near circular dispersions. NASA data on sounding rocket impact dispersion supports this conclusion.

The impact dispersion area is based on a 5σ dispersion. Appendix D uses the effective casualty area data, the table D–1, which contains information similar to appendix C, table C–3. This data represents the estimation of the area produced by both suborbital launch vehicle inert pieces. The baseline risk estimation approach in appendix D has the applicant calculate the probability of impact for each populated area, and then determining an E_c value for each populated area. To obtain the estimated E_c for an entire impact dispersion area, the applicant adds the E_c results for each populated area. If the population within the impact dispersion area is relatively small, an applicant may wish to conduct a less rigorous analysis by making conservative assumptions. Appendix D offers the option of analyzing a worst-case impact dispersion area for those where such an approach might save time and analysis, similar to the approach in appendix C.

Paperwork Reduction Act

This proposal contains information collection requirements. As required by the Paperwork Reduction Act of 1995 (44 U.S.C. section 3507(d)), the Department of Transportation has submitted the information collection requirements associated with this proposal to the Office of Management and Budget for its review.

Title: Licensing and Safety Requirements for Operation of a Launch Site.

The FAA is proposing to amend its commercial space transportation licensing regulations to add licensing and safety requirements for the operation of a launch site. In the past, commercial launches have occurred principally at federal launch ranges under safety procedures developed by federal launch range operators. To enable the development and use of launch sites that are not operated by a federal launch ranges, rules are needed to establish specific licensing and safety requirements for operating a launch site, whether that site is located on or off of a federal launch range. These proposed rules would provide licensed launch site operators with licensing and safety requirements to protect the public from the risks associated with activities at launch site.

The required information will be used to determine whether applicants satisfy requirements for obtaining a license to protect the public from risks associated with operations at a launch site. The information to be collected includes data required for performing launch site location analyses. A launch site license is valid for a period of five years, and it is assumed that all licenses would be renewed after five years. The frequency of required submissions, therefore, will depend upon the number of prospective launch site operators seeking a license and the renewal of site licenses.

The respondents are all licensees authorized to conduct licensed launch site activities. It is estimated that there will be two respondents annually at 796 hours per respondent for an estimated annual burden hours of 1592 hours.

The agency is soliciting comments to (1) evaluate whether the proposed collection of information is necessary for the proper performance of the functions of the agency, including whether the information will be practical utility; (2) evaluate the accuracy of the agency's estimate of the burden; (3) enhance the quality, utility, and, clarity of the information to be collected; and (4) minimize the burden of the collection of information on those who are to respond, including through the use of appropriate automated, electronic, mechanical, or other technological collection techniques or other forms of information technology (for example, permitting electronic submission of responses).

Individuals and organizations may submit comments on the information collection requirement by August 24, 1999, and should direct them to the address listed in the **ADDRESSES** section of this document.

According to the regulations implementing the Paperwork Reduction Act of 1995, (5 CFR 1320.8(b)(2)(vi)), an agency may not conduct or sponsor, and a person is not required to respond to a collection of informaiton unless it displays a currently valid OMB control number. The OMB control number for this information collection will be published in the **Federal Register** after it is approved by the Office of Management and Budget.

Regulatory Evaluation Summary

This section summarizes the full regulatory evaluation prepared by the FAA that provides more detailed estimates of the economic consequences of this regulatory action. This summary and the full evaluation quantify, to the extent practicable, estimated costs to the private sector, consumers, Federal, State and local governments, as well as anticipated benefits. This evaluation was conducted in accordance with Executive Order 12866, which directs that each Federal agency can propose or adopt a regulation only upon a reasoned determination that the benefits of the intended regulation justify the costs. This document also includes an initial regulatory flexibility determination required by the Regulatory Flexibility Act of 1980, and an international trade impact assessment, required by the Office of Management and Budget. This proposal is not considered a significant regulatory action under section 3(f) of Executive Order 12866. In addition, under Regulatory Policies and Procedures of the Department of Transportation (44 FR 11034; February 26, 1979), this proposal is considered significant because there is substantial public interest in the rulemaking.

The Federal Aviation Administration proposes to amend its commercial space licensing regulations to add licensing requirements for the operation of a launch site. The proposal would provide launch site operators with licensing and operating requirements to protect the public from the risks

associated with operations at a launch site. The FAA currently issues licenses to launch site operators on a case-by case-approach. Elements of that approach are reflected in the guidelines, ''Site Operators License Guidelines for Applicants,'' which describe the information that applicants provide the FAA for a license to operate a launch site. The FAA's interpretation and implementation of the guidelines constitute another element of the case-by-case approach and additional elements, such as policy review, not reflected in the guidelines.

The proposal represents quantifiable changes in costs compared to the guidelines (current practice) in the following two areas. They are the launch site location review and approval and the launch site operations review and approval. The FAA has estimated the costs and cost savings of these changes under two different cost scenarios over a 10-year period discounted at 7 percent in 1997 dollars. The total 10-year undiscounted cost savings is estimated to be between $84,000 and $160,000 (or between $53,000 and $105,000, discounted). The most burdensome cost scenario (where net cost savings is the least) to the industry would result in the costs to the launch site operators of $3,000 (or $2,000, discounted) for the launch site location reviews and approval provisions and a cost savings of $11,000 (or $8,000, discounted) for the launch site operations review and approval provisions. Although there would be no cost impact to the FAA, there would be a cost savings to the FAA from the most burdensome cost scenario of $104,000 or $70,000 discounted.

There are significant nonquantifiable benefits in two areas. First, the proposal eliminates overlapping responsibilities. Second, the proposal provides increased details and specificity, which are not present in the guidelines.

Regulatory Flexibility Determination

The Regulatory Flexibility Act of 1980 establishes ''as a principle of regulatory issuance that agencies shall endeavor, consistent with the objective of the rule and of applicable statues, to fit regulatory and informational requirements to the scale of the business, organizations, and governmental jurisdictions subject to regulation.'' To achieve that principal, the Act requires agencies to solicit and consider flexible regulatory proposals and to explain the rational for their actions. The Act covers a wide-range of small entities, including small businesses, not-for-profit organizations and small governmental jurisdictions.

Agencies must perform a review to determine whether a proposed or final rule will have a significant economic impact on a substantial number of small entities. If the determination is that it will, the agency must prepare a regulatory flexibility analysis (RFA) as described in the Act. However, if an agency determines that a proposed or final rule is not expected to have a significant economic impact on a substantial number of small entities, section 605(b) of the 1980 act provides that the head of the agency must so certify and an RFA is not required. The certification must include a statement providing the factual basis for this determination, and the reasoning should be clear.

The FAA conducted the required review of this proposal and determined that it would not have a significant economic impact on a substantial number of small entities. Accordingly, pursuant to the regulatory Flexibility Act, 5 U.S.C. 605(b), the Federal Aviation Administration certifies that this rule will not have a significant economic impact on a substantial number of small entities.

Potentially Affected Entities

Entities who are licensed, or have begun the licensing process, were contacted to determine their size and to gain insight into the impacts of the proposed regulations on the licensing process. Spaceport Florida Authority (SFA), Spaceport Systems International, L.P. (SSI), the Virginia Commonwealth Space Flight Authority (VCSFA) and the Alaska Aerospace Development Corporation (AADC) are all licensed to operate launch sites. The New Mexico Office of Space Commercialization (NMOSC) is mentioned briefly below although it is only in the pre-application consultation phase.

The Virginia Commonwealth Space Flight Authority (VCSFA) is a not-for-profit subdivision of the Commonwealth of Virginia, responsible for oversight of the activities of the Virginia Commercial Space Flight Center (VCSFC). The VCSFC is located within the boundaries of the Wallops Flight Facility (WFF). As a subdivision of the Commonwealth of Virginia, the VCSFA is empowered by the Acts of the General Assembly to do all things necessary to carry out its mission of stimulating economic growth and education through commercial aerospace activities.

The Spaceport Florida Authority (SFA) was created by Florida's Governor and Legislature as the nation's first state government space agency. The authority was established to develop space-related enterprise, including launch activities, industrial development and education-related projects. SFA operate Spaceport Florida (SPF), located on Cape Canaveral Air Station.

Launch site operator California Spaceport is located on Vandenberg Air Force Base. The launch site is operated and managed by Spaceport Systems International, L.P. who is in partnership with ITT Federal Services Corporation (ITT FSC). ITT FSC is one of the largest U.S.-based technical and support services contractors in the world.

The Kodiak Launch Complex is being built by the Alaska Aerospace Development Corporation. AADC is a public corporation created by the State of Alaska to develop aerospace related economic and technical opportunities for the state.

The Southwest Regional Spaceport (SRS) is to be operated by the New Mexico Office of Space Commercialization (NMOSC). The NMOSC is a division of the State's New Mexico Economic Development Department. Commencement of space flight operations is not expected until early the next decade.

Definition of Small Entities

The Small Business Administration has defined small business entities relating to space vehicles (SIC codes 3761, 3764 and 3769) as entities comprising fewer than 1000 employees. Although the above mentioned entities have fewer than 1000 employees in their immediate segment of the business, they are affiliated with/or funded by state governments and large parent companies. The VCSFA is a not-for-profit subdivision of the Commonwealth of Virginia; the SFA is a government space agency; the SSI is affiliated with ITT FSC; and AADC is a government sponsored corporation.

Under 5 U.S.C. 605, the FAA concludes that this proposal would impose little or no additional cost on this industry and certifies that it will not have a significant economic impact on a substantial number of small entities. The FAA nevertheless requests comments on any potential impacts associated with this proposal.

International Trade Impact Assessment

Licensing and Safety Requirements for Operation of a Launch Site (14 CFR part 420) would not constitute a barrier to international trade, including the export of U.S. goods and services out of the United States. The proposal affects operation of launch sites that are currently located or being proposed within the United States or operated by U.S. citizens.

The proposal is not expected to affect the trade opportunities for U.S. firms doing business overseas or for foreign firms doing business in the United States. The FAA requests information on the effect that this proposal would have on international trade.

Federalism Implications

The regulations proposed herein will not have substantial direct effects on the states, on the relationship between the national government and the states, or on the distribution of power and responsibilities among the various levels of government. Therefore, in accordance with Executive Order 12612, it is determined that this proposal would not have sufficient federalism implications to warrant the preparation of a Federalism Assessment.

Unfunded Mandates Reform Act Assessment

Title II of the Unfunded Mandates Reform Act of 1995 (UMRA), enacted as Pub. L. 104–4 on March 22, 1995, requires each Federal agency, to the extent permitted by law, to prepare a written assessment of the effects of any Federal mandate in a proposed or final agency rule that may result in the expenditure by State, local, and tribal governments, in the aggregate, or by the private sector, of $100 million or more (adjusted annually for inflation) in any one year. Section 204(a) of the UMRA, 2 U.S.C. 1534(a), requires the Federal agency to develop an effective process to permit timely input by elected officers (or their designees) of State, local, and tribal governments on a proposed ''significant intergovernmental mandate.'' A ''significant intergovernmental mandate'' under the UMRA is any provision in a Federal agency regulation that will impose an enforceable duty upon State, local, and tribal governments, in the aggregate, of $100 million (adjusted annually for inflation) in any one year. Section 203 of the UMRA, 2 U.S.C. 1533, which supplements section 204(a), provides that before establishing any regulatory requirements that might significantly or uniquely affect small governments, the agency shall have developed a plan that, among other things, provides for notice to potentially affected small governments, if any, and for a meaningful and timely opportunity to provide input in the development of regulatory proposals.

This proposed does not meet the cost thresholds described above. Furthermore, this proposal would not impose a significant cost or uniquely affect small governments. Therefore, the requirements of Title II of the Unfunded Mandates Reform Act of 1995 do not apply.

Environmental Assessment

FAA Order 1050.1D defines FAA actions that may be categorically excluded from preparation of a National Environmental Policy Act (NEPA) environmental assessment (EA) or environmental impact statement (EIS). In accordance with FAA Order 1050.1D, appendix 4, paragraph 4(i), regulatory documents which cover administrative or procedural requirements qualify for a categorical exclusion. Proposed sections in subpart B of part 420 would require an applicant to submit sufficient environmental information for the FAA to comply with NEPA and other applicable environmental laws and regulations during the processing of each license application. Accordingly, the FAA proposes that this rule qualifies for a categorical exclusion because no significant impacts to the environment are expected to result from the finalization or implementation of its administrative provisions for licensing.

Energy Impact

The energy impact of the rulemaking action has been assessed in accordance with the Energy Policy and Conservation Act (EPCA) and Pub. L. 94–163, as amended (42 U.S.C. 6362). It has been determined that it is not a major regulatory action under the provisions of the EPCA.

List of Subjects in 14 CFR 417 and 420

Confidential business information. Environmental protection, Organization and functions, Reporting and recordkeeping requirements, Rockets, Space transportation and exploration.

The Amendment

In consideration of the foregoing, the Federal Aviation Administration amends Chapter III of Title 14 of the Code of Federal Regulations to read as follows:

PART 417—[REMOVED AND RESERVED]

1. Part 417 is removed and reserved.

2. Subchapter C of Chapter III, title 14, Code of Federal Regulations, is amended by adding a new part 420 to read as follows:

PART 420—LICENSE TO OPERATE A LAUNCH SITE

Subpart A—General

Sec.

420.1 Scope.
420.3 Applicability.
420.5 Definitions.
420.6–420.14 [Reserved]

Subpart B—Criteria and Information Requirements for Obtaining a License

420.15 Information requirements.
420.17 Bases for issuance of a license.
420.19 Launch site location review.
420.21 Launch site criteria for expendable launch vehicles.
420.23 Launch site location review for unproven launch vehicles.
420.31 Explosive site plan.
420.33 Handling of solid propellants.
420.35 Storage or handling of liquid propellants.
420.37 Solid and liquid propellants located together.
420.38–420.40 [Reserved]

Subpart C—License Terms and Conditions

420.41 License to operate a launch site-general.
420.43 Duration.
420.45 Transfer of a license to operate a launch site.
420.47 License modification.
420.49 Compliance monitoring.

Subpart D—Responsibilities of a Licensee

420.51 Responsibilities—general.
420.53 Control of public access.
420.55 Scheduling of launch site operations.
420.57 Notifications.
420.59 Launch site accident investigation plan.
420.61 Records.
420.63 Explosives.
Appendix A to Part 420—Method for Defining a Flight Corridor
Appendix B to Part 420—Method for Defining a Flight Corridor
Appendix C to Part 420—Risk Analysis
Appendix D to Part 420—Impact Dispersion Areas and Casualty Expectancy Estimate for Unguided Suborbital Launch Vehicles
Appendix E to Part 420—Tables for Explosive Site Plan

Authority: 49 U.S.C. 70101–70121.

Subpart A—General

§ 420.1 Scope.

This part prescribes the information and demonstrations that must be submitted as part of a license application, the bases for license approval, license terms and conditions, and post-licensing requirements with which a licensee shall comply to remain licensed. Requirements for preparing a license application are also contained in part 413 of this subchapter.

§ 420.3 Applicability.

This part applies to any person seeking a license to operate a launch site or to a person licensed under this part.

§ 420.5 Definitions.

For the purpose of this part,

Ballistic coefficient means the weight of an object divided by the quantity product of the coefficient of drag of the object and the area of the object.

Compatibility means the chemical property of materials that may be located together without increasing the probability of an accident or, for a given quantity, the magnitude of the effects of such an accident.

Debris dispersion radius (D_{max}) means the estimated maximum distance from a launch point that debris travels given a worst-case launch vehicle failure and flight termination at 10 seconds into flight.

Divison 1.3 explosive means an explosive as defined in 49 CFR 173.50.

Downrange area means a portion of a flight corridor beginning where a launch area ends and ending 5,000 nautical miles from the launch point for an orbital launch vehicle, and ending with an impact dispersion area for a guided sub-orbital launch vehicle.

E,F,G coordinate system means an orthgonal, Earth-fixed, geocentric, right-handed system. The origin of the coordinate system is at the center of an ellipsoidal earth model. The E-axis is positive directed through the Greenwich meridian. The F-axis is positive directed through 90 degrees east longitude. The EF-plane is coincident with the ellipsoidal Earth model's equatorial plane. The G-axis is normal to the EF-plane and positive directed through the north pole.

E,N,U. coordinate system means an orthogonal, Earth-fixed, topocentric, right-handed system. The origin of the coordinate system is at a launch point. The E-axis is positive directed east. The N-axis is positive directed north. The EN-plane is tangent to an ellipsoidal Earth model's surface at the origin and perpendicular to the geodetic vertical. The U-axis is normal to the EN-plane and positive directed away from the Earth.

Effective casualty area (A_c) means the aggregate casualty area of each piece of debris created by a launch vehicle failure at a particular point on its trajectory. The effective casualty area for each piece of debris is the area within which 100 percent of the unprotected population on the ground are assumed to be a casualty, and outside of which 100 percent of the population are assumed not to be a casualty. This area is based on the characteristics of the debris piece including its size, the path angle of its trajectory, impact explosions, the size of a person, and debris skip, splatter, and bounce.

Explosive means any chemical compound or mechanical mixture that, when subjected to heat, impact, friction, detonation or other suitable initiation, undergoes a rapid chemical change that releases large volumes of highly heated gases that exert pressure in the surrounding medium. The term applies to materials that either detonate or deflagrate.

Explosive equivalent means a measure of the blast effects from explosion of a given quantity of material expressed in terms of the weight of trinitrotoluene (TNT) that would produce the same blast effects when detonated.

Explosive hazard facility means a facility at a launch site where solid or liquid propellant is stored or handled.

Flight azimuth means the initial direction in which a launch vehicle flies relative to true north expressed in degrees-decimal-degrees.

Flight corridor means an area on the earth's surface estimated to contain the majority of hazardous debris from nominal and non-nominal flight of an orbital or guided suborbital launch vehicle.

Guided suborbital launch vehicle means a suborbital rocket that employs an active guidance system.

Impact dispersion area means an area representing and estimated five standard deviation dispersion about a nominal impact point of an intermediate or final stage of a suborbital launch vehicle.

Impact dispersion factor means a constant used to estimate, using a stage apogee, a five standard deviation dispersion about a nominal impact point of an intermediate or final stage of a suborbital launch vehicle.

Impact dispersion radius (R_i) means a radius that defines an impact dispersion area.

Impact range means the distance between a launch point and the impact point of a suborbital launch vehicle stage.

Impact range factor means a constant used to estimate, using the stage apogee, the nominal impact point of an intermediate or final stage of a suborbital launch vehicle.

Instantaneous impact point (IIP means an impact point, following thrust termination of a launch vehicle, calculated in the absence of atmospheric drag effects.

Instantaneous impact point (IIP) range rate means a launch vehicle's estimated IIP velocity along the Earth's surface.

Intraline distance means the minimum distance permitted between any two explosive hazard facilities in the ownership, possession or control of one launch site customer.

Launch area means, for a flight corridor defined using appendix A to this part, the portion of a flight corridor from the launch point to a point 100 nautical miles in the direction of the flight azimuth. For a flight corridor defined using appendix B to this part, a launch area is the portion of a flight corridor from the launch point to the enveloping line enclosing the outer boundary of he last debris dispersion circle.

Launch point means a point on the Earth from which the flight of a launch vehicle begins, and is defined by its geodetic latitude, longitude and height on an ellipsoidal Earth model.

Launch site accident means an unplanned event occurring during a ground activity at a launch site resulting in a fatality or serious injury (as defined in 49 CFR 830.2) to any person who is not associated with the activity, or any damage estimated to exceed $25,000 to property not associated with the activity.

Net explosive weight (NEW) means the total weight, expressed in pounds, of explosive material or explosive equivalency contained in an item.

Nominal means, in reference to launch vehicle performance, trajectory, or stage impact point, a launch vehicle flight where all launch vehicle aerodynamic parameters are as expected, all vehicle internal and external systems perform as planned, and there are no external perturbing influences (e.g., winds) other than atmospheric drag and gravity.

Nominal trajectory means the position and velocity components of a nominally performing launch vehicle relative to an x, y, z coordinate system, expressed in x, y, z, $\dot{x}_0$, $\dot{y}_0$, $\dot{z}_0$.

Overflight dwell time means the period of time it takes for a launch vehicle's IIP to move past a populated area. For a given populated area, the overflight dwell time is the time period measured along the nominal trajectory IIP ground trace from the time point whose normal with the trajectory intersects the most uprange part of the populated area to the time point whose normal with the trajectory intersects the most downrange part of the populated area.

Overflight exclusion zone means a portion of a flight corridor which must remain clear of the public during the flight of a launch vehicle.

Populated area means a land area with population.

Population density means the number of people per unit area in a populated area.

Position data means data referring to the current position of a launch vehicle with respect to flight time expressed through the x, y, z coordinate system.

Public area means any area outside a hazard area and is an area that is not in the possession, ownership or other control of a launch site operator or of a

launch site customer who possess, owns or otherwise controls that hazard area.

Public area distance means the minimum distance permitted between a public area and an explosive hazard facility.

Unguided sub-orbital launch vehicle means a sub-orbital rocket that does not have a guidance system.

x,y,z coordinate system means an orthogonal, Earth-fixed, topocentric, right-handed system. This origin of the coordinate system is at a launch point. The x-axis coincides with the initial launch azimuth and is positive in the downrange direction. The y-axis is positive to the left looking downrange. The xy-plane is tangent to the ellipsoidal earth model's surface at the origin and perpendicular to the geodetic vertical. The z-axis is normal to the xy-plane and positive directed away from the earth.

ϕ_0,λ_0,h_0 means a latitude, longitude, height system where ϕ_0 is the geodetic latitude of a launch point, λ_0 is the east longitude of the launch point, and h_0 is the height of the launch point above the reference ellipsoid. ϕ_0 and λ_0 are expressed in degrees-decimal-degrees.

§§ 420.6–420.14 [Reserved]

Subpart B—Criteria and Information Requirements for Obtaining a License

§ 420.15 Information requirements.

(a) An applicant shall provide the FAA with information for the FAA to analyze the environmental impacts associated with operation of a proposed launch site. The information provided by an applicant must be sufficient to enable the FAA to comply with the requirements of the National Environment Policy Act, 42 U.S.C. 4321 *et seq.* (NEPA), the Council on Environmental Quality Regulations for Implementing the Procedural Provisions of NEPA, 40 CFR parts 1500–1508, and the FAA's Procedures for Considering Environmental Impacts, FAA Order 1050.1D. An applicant shall submit environmental information concerning a proposed launch site not covered by existing environmental documentation and other factors as determined by the FAA.

(b) An applicant shall:

(1) Provide the information necessary to demonstrate compliance with §§ 420.19, 420.21, and 420.23. For launch sites analyzed for expendable launch vehicles, an applicant shall provide the following information:

(i) A map or maps showing the location of each launch point proposed, and the flight azimuth, overflight exclusion zone, flight corridor, and each impact dispersion area for each launch point;

(ii) Each launch vehicle type and any launch vehicle class proposed for each launch point;

(iii) Each month and any percent wind data used in the analysis;

(iv) Any launch vehicle apogee used in the analysis;

(v) If populated areas are located within an overflight exclusion zone, a demonstration that there are times when the public is not present or that the applicant has an agreement in place to evacuate the public from the overflight exclusion zone during a launch;

(vi) Each populated area located within a flight corridor or impact dispersion area;

(vii) The estimated casualty expectancy calculated for each populated area within a flight corridor or impact dispersion area; and

(vii) The estimated casualty expectancy for each flight corridor or set of impact dispersion areas.

(2) Identify foreign ownership of the applicant, as follows:

(i) For a sole proprietorship or partnership, all foreign owners or partners;

(ii) For a corporation, any foreign ownership interest of 10 percent or more; and

(iii) For a joint venture, association, or other entity, any foreign entities participating in the entity.

(3) Provide an explosive site plan in accordance with §§ 420.31, 420.33, 420.35 and 420.37.

(c) An applicant shall provide the information necessary to demonstrate compliance with the requirements of §§ 420.53, 420.55, 420.57, 420.59 and 420.63.

(d) An applicant who is proposing to locate a launch site at an existing launch point at a federal launch range is not required to comply with paragraph (b)(1) of this section if a launch vehicle of the same type and class as proposed for the launch point has been safely launched from the launch point. An applicant who is proposing to locate a launch site at a federal launch range is not required to comply with paragraph (b)(3) of this section.

§ 420.17 Bases for issuance of a license.

(a) The FAA will issue a license under this part when the FAA determines that:

(1) The application provides the information required under § 420.15;

(2) The National Environmental Policy Act review is completed;

(3) The launch site location meets the criteria provided in §§ 420.19, 420.21, and 420.23;

(4) The explosive site plan meets the criteria provided in §§ 420.31, 420.33, 420.35 and 420.37;

(5) The application demonstrates that the applicant shall satisfy the requirements of subpart D of this part; and

(6) Issuing a license would not jeopardize foreign policy or national security interests of the United States.

(b) The FAA advises an applicant, in writing, of any issue arising during an application review that would lead to denial. The applicant may respond in writing, submit additional information, or revise its license application.

§ 420.19 Launch site location review.

(a) To gain approval for a launch site location, an applicant shall demonstrate that for at least one type of expendable launch vehicle—orbital, guided sub-orbital or unguided sub-orbital—or a reusable launch vehicle, a flight corridor or set of impact dispersion areas exists that does not exceed an estimated expected average number of 0.00003 casualties (E_c) to the collective member of the public exposed to hazards from any one flight ($E_c \leqq 30\times10^{-6}$). For an orbital expendable launch vehicle, an applicant shall choose a weight class as defined in table 1.

(b) For a guided orbital or guided sub-orbital expendable launch vehicle, an applicant shall define a flight corridor using one of the methodologies provided in appendices A or B to this part. If a defined flight corridor contains a populated area, the applicant shall use appendix C to this part to estimate the casualty expectation associated with the flight corridor.

(c) For an unguided sub-orbital expendable launch vehicle, an applicant shall define impact dispersion areas as provided by appendix D to this part. If a defined impact dispersion area contains any populated areas, the applicant shall use appendix D to this part to estimate the casualty expectation associated with the set of impact dispersion areas.

(d) For a reusable launch vehicle, an applicant shall define a flight corridor that the applicant estimates to contain the hazardous debris from nominal and non-nominal flight of a reusable launch vehicle. If the defined flight corridor contains a populated area, the applicant shall estimate the casualty expectation associated with a reusable launch vehicle mission. An applicant shall demonstrate that the estimated expected average number of casualties (E_c) to the collective member of the public exposed to hazards from any one mission is less than 0.00003. The FAA will evaluate the adequacy of the flight corridor and

casualty expectancy analysis on a case-by-case basis.

§ 420.21 Launch site criteria for expendable launch vehicles.

(a) For each launch point proposed for expendable launch vehicles, an applicant shall use each type of expendable launch vehicle proposed to be launched from that launch point as the basis of its demonstration of compliance with the criteria provided in paragraph (b) of this section and for the analyses provided in appendices A through D to this part.

(b) For each type of expendable launch vehicle selected under paragraph (a) of this section, the distance from the proposed launch point to the launch site boundary must be at least as great as the minimum distance listed in table 2 for that type and any class of launch vehicle.

§ 420.23 Launch site location review for unproven launch vehicles.

The FA will evaluate the adequacy of a launch site location for unproven launch vehicles including all new launch vehicles, whether expendable or reusable, on a case-by-case basis.

TABLE 1 TO § 420.21.—ORBITAL LAUNCH VEHICLE CLASSES BY PAYLOAD WEIGHT (LBS)

	Orbital Launch Vehicles			
100 nm orbit	Small	Medium	Medium large	Large
28 degrees inclination [1]	≤440	>4400 to ≤11100	>11100 to ≤18500	>18500
90 degrees inclination [2]	≤3300	>3300 to ≤8400	>8400 to ≤15000	>15000

[1] 28 degrees inclination orbit from a launch point at 28 degrees latitude.
[2] 90 degrees inclination orbit.

TABLE 2 TO § 420.21.—MINIMUM DISTANCE FROM LAUNCH POINT TO LAUNCH SITE BOUNDARY (FEET)

Orbital launch vehicles				Suborbital launch vehicles	
Small	Medium	Medium large	Large	Guided suborbital launch vehicle	Unguided suborbital launch vehicle
7300	9300	10600	13000	8000	1600

§ 420.13 Explosvie site plan.

(a) An applicant shall submit an explosive site plan that establishes compliance with §§ 420.33, 420.35, and 420.37. The explosive site plan shall include:

(1) A scaled map that shows the location of all proposed explosive hazard facilities at the proposed launch site and that shows actual and minimal allowable distances between each explosive hazard facility and all other explosive hazard facilities and each public area, including the launch site boundary.

(2) A listing of the maximum quantities of liquid and solid propellants to be located at each explosive hazard facility, including the class and division for each solid propellant and the hazard and compatibility group for each liquid propellant; and

(3) A description of each activity to be conducted in each explosive hazard facility.

(b) An applicant applying for a license to operate a launch site at a federal launch range need not submit an explosive site plan to the FAA.

§ 420.33 Handling of solid propellants.

(a) An applicant shall determine the total quantity of solid propellant explosives by class and division in each explosive hazard facility where solid propellants will be handled. The total quantity of explosives in an explosive hazard facility shall be measured as the net explosive weight (NEW) of the solid propellants. When division 1.1 explosives, designed to be installed on launch vehicles and designed not to detonate division 1.3 components, are located with division 1.3 explosives, that total quantity of explosives shall be the NEW of the division 1.3 components.

(b) An applicant shall separate each explosive hazard facility where solid propellants will be handled from all other explosive hazard facilities, each public area and the launch site boundary by a distance no less than those provided for each quantity in appendix E, table E–1. An applicant shall employ no less than the applicable public area distance to separate an explosive hazard facility from each public area and from the launch site boundary. An applicant shall employ no less than an intraline distance to separate an explosive hazard facility from all other explosive hazard facilities that will be used by a single customer. An applicant may use linear interpolation for NEW quantities between table entries. For every explosive hazard facility where solid propellants in quantities greater than 1,000,000 pounds will be handled, an applicant shall separate the explosive hazard facility from all other explosive hazard facilities, each public area and the launch site boundary in accordance with the minimum separation distances derived from the following relationships:

(1) For a public area distance:

$D = 8W^{1/3}$

where ''D'' equals the minimum separation distance in feet and ''W'' equals the NEW of propellant.

(2) For an intraline distance:

$D = 5W^{1/3}$

where ''D'' equals the minimum separation distance in feet and ''W'' equals the NEW of propellant.

(c) An applicant shall measure separation distance from the closest debris or explosive hazard source in an explosive hazard facility.

§ 420.35 Storage or handling of liquid propellants.

(a) For an explosive hazard facility where liquid propellants are handled or stored, an applicant shall determine the total quantity of liquid propellant and, if applicable pursuant to paragraph (a)(3) of this section, the explosive equivalent of liquid propellant in each explosive hazard facility in accordance with the following:

(1) The quantity of liquid propellant in a tank, drum, cylinder, or other container is the net weight in pounds of the propellant in the container. The determination of quantity shall include any liquid propellant in associated piping to any point where positive

means are provided for interrupting the flow through the pipe, or interrupting a reaction in the pipe in the event of a mishap.

(2) Where two or more containers of compatible liquid propellants will be handled or stored together in an explosive hazard facility, the total quantity of propellant to determine the minimum separation distance between the explosive hazard facility and all other explosive hazard facilities and each public area shall be the total quantity of liquid propellant in all containers, unless:

(i) The containers are separated one from the other by the appropriate distance as provided in paragraph (b)(2) of this section; or

(ii) The containers are subdivided by intervening barriers, such as diking, that prevent mixing.

(iii) If paragraph (a)(2) (i) or (ii) of this section apply, an applicant shall use the quantity of propellant requiring the greatest separation distance pursuant to paragraph (b) of this section to determine the minimum separation distance between the explosive hazard facility and all other explosive hazard facilities and each public area.

(3) Where two or more containers of incompatible liquid propellants will be handled or stored together in an explosive hazard facility, an applicant shall determine the explosive equivalent in pounds of the combined liquids, using the formulas provided in appendix E, table E–2, to determine the minimum separation distance between the explosive hazard facility and other explosive hazard facilities and public areas unless the containers are separated one from the other by the appropriate distance as determined in paragraph (b)(3) of this section. An applicant shall then use the quantity of liquid propellant requiring the greatest separation distance to determine the minimum separation distance between the explosive hazard facility and all other explosive hazard facilities and each public area.

(4) An applicant shall convert quantities of liquid propellants from gallons to pounds using the conversion factors provided in appendix E, table E–3 and the following equation:

Pounds of propellant = gallons × density of propellant (pounds per gallon).

(b) An applicant shall use appendix E, table E–3 to determine hazard and compatibility groups and shall separate liquid propellants from each other and from each public area using distances no less than those provided in appendix E, tables E–4 through E–7 in accordance with the following:

(1) An applicant shall measure minimum separation distances from the hazard source in an explosive hazard facility, such as a container, building, segment, or positive cutoff point in piping, closest to each explosive hazard facility.

(2) An applicant shall measure the minimum separation distance between compatible liquid propellants using the ''intragroup and compatible'' distance for the propellant quantity and hazard group that requires the greater distance prescribed by appendix E, tables E–4, E–5, and E–6.

(3) An applicant shall measure the minimum separation distance between liquid propellants of different compatibility groups using the ''public area and incompatible'' distance for the propellant quantity and hazard group that requires the greater distance provided in appendix E, tables E–4, E–5, and E–6, unless the propellants of different compatibility groups are subdivided by intervening barriers that prevent mixing. If such barriers are present, the minimum separation distance shall be the ''intragroup and compatible'' distance for the propellant quantity and group that requires the greater distance provided in appendix E, tables E–4, E–5, and E–6.

(4) An applicant shall separate liquid propellants from each public area using a distance no less than the ''public area and incompatible'' distance provided in appendix E, tables E–4, E–5, and E–6.

(5) An applicant shall separate each explosive hazard facility that will contain liquid propellants where explosive equivalents apply pursuant to paragraph (a)(3) of this section from all other explosive hazard facilities of a single customer using the intraline distance provided in appendix E, table E–7, and from each public area using the public area distance provided in appendix E, table E–7.

§ 420.37 Solid and liquid propellants located together.

An applicant proposing an explosive hazard facility where solid and liquid propellants are to be located together shall determine the minimum separation distances between the explosive hazard facility and other explosive hazard facilities and public areas in accordance with the following. An applicant shall determine the minimum separation distances between the explosive hazard facility and all other explosive hazard facilities and public areas required for the solid propellants in accordnace with § 420.33. An applicant shall then apply the greater of the separation distances determined by the liquid propellant alone or the solid propellant alone.

§§ 420.38–420.40 [Reserved]

Subpart C—License Terms and Conditions

§420.41 License to operate a launch site—general.

(a) A license to operate a launch site authorizes a licensee to operate a launch site in accordance with the representations contained in the licensee's application, with terms and conditions contained in any license order accompanying the license, subject to the licensee's compliance with 49 U.S.C. subtitle IX, ch. 701 and this chapter.

(b) A license to operate a launch site authorizes a licensee to offer its launch site to a launch operator for each launch point for the type and any class of launch vehicle identified in the license application and upon which the licensing determination is based.

(c) Issuance of a license to operate a launch site does not relieve a licensee of its obligation to compy with any other laws or regulations, nor does it confer any proprietary, property, or exclusive right in the use of airspace or outer space.

§420.43 Duration.

A license to operate a launch site remains in effect for five years from the date of issuance unless surrendered, suspended, or revoked before the expiration of the term and is renewable upon application by the licensee.

§420.45 Transfer of a license to operate a launch site.

(a) Only the FAA may transfer a license to operate a launch site.

(b) The FAA will transfer a license to an applicant who has submitted an application in accordance with 14 CFR part 413, satisfied the requirements of § 420.15, and obtained each approval required under § 420.17 for a license.

(c) The FAA may incorporate by reference any findings made part of the record to support a prior related licensing determination.

§ 420.47 License modification.

(a) Upon application or upon its own initiative, the FAA may modify a license to operate a launch site at any time by issuing a license order that adds, removes, or modifies a license term or condition to ensure compliance with the Act and the requirements of this chapter.

(b) After a license to operate a launch site has been issued, a licensee shall apply to the FAA for modification of its license if:

(1) The licensee proposes to operate the launch site in a manner that is not authorized by the license; or

(2) Any representation contained in the license application that is material to public health and safety or safety of property is no longer accurate and complete or does not reflect the licensee's actual operation of the launch site.

(c) An application to modify a license must meet the requirements of part 413 of this chapter. The licensee shall indicate any part of its license or license application that would be changed or affected by the proposed modification.

(d) The FAA will approve a request for modification that satisfies the requirements set forth in this part.

(e) Upon approval of a request for modification, the FAA will issue either a written approval to the licensee or a license order modifying the license if a term or condition of the license is changed, added, or deleted. A written approval has the full force and effect of a license order and is part of the licensing record.

§ 420.49 Compliance monitoring.

A licensee shall allow access by and cooperate with federal officers or employees or other individuals authorized by the FAA to observe any activities of the licensee, its customers, its contractors, or subcontractors, associated with licensed operation of the licensee's launch site.

Subpart D—Responsibilities of a Licensee

§ 420.51 Responsibilities—general.

(a) A licensee shall operate its launch site in accordance with the representations in the application upon which the licensing determination is based.

(b) A licensee is responsible for compliance with 49 U.S.C. Subtitle IX, ch. 701 and for meeting the requirements of this chapter.

§ 420.53 Control of public access.

(a) A licensee shall prevent unauthorized access to the launch site, and unauthorized, unescorted access to explosive hazard facilities or other hazard areas not otherwise controlled by a launch operator, through the use of security personnel, surveillance systems, physical barriers, or other means approved as part of the licensing process.

(b) A licensee shall notify anyone entering the launch site of safety rules and emergency and evacuation procedures prior to that person's entry unless that person has received a briefing on those rules and procedures within the previous year.

(c) A licensee shall employ warning signals or alarms to notify any persons at the launch site of any emergency.

§ 420.55 Scheduling of launch site operations.

(a) A licensee shall develop and implement procedures to schedule operations to ensure that each operation carried out by a customer, including a launch operator, at the launch site does not create the potential for a mishap that could result in harm to the public because of the proximity of the operations, in time or place, to operations of any other customer at the launch site.

(b) A licensee shall provide its launch site scheduling requirements to each customer before the customer begins operations at the launch site.

§ 420.57 Notifications.

(a) A licensee shall notify a launch operator of any limitations on the operations conducted at the launch site that arise out of its license to operate a launch site.

(b) A licensee shall complete an agreement with the local U.S. Coast Guard district to establish procedures for the issuance of a Notice to Mariners prior to launch and other such measures as the Coast Guard deems necessary to protect public health and safety.

(c) A licensee shall complete an agreement with the FAA regional office having jurisdiction over the airspace through which launches will take place, to establish procedures for the issuance of a Notice to Airmen prior to a launch and for closing of air routes during the launch window and other such measures as the FAA regional office deems necessary to protect public health and safety.

(d) At least two days prior to flight of a launch vehicle, the licensee shall notify local officials and all owners of land adjacent to the launch site of the schedule.

§ 420.59 Launch site accident investigation plan.

(a) *General.* A licensee shall develop and implement a launch site accident investigation plan that contains the licensee's procedures for reporting, responding to, and investigating launch site accidents, as defined in § 420.5. The launch site accident investigation plan must be signed by an individual authorized to sign and certify the application in accordance with § 413.7(c) of this chapter.

(b) *Reporting requirements.* A launch site accident investigation plan shall provide for—

(1) Immediate notification to the Federal Aviation Administration (FAA) Washington Operations Center in the event of a launch site accident.

(2) Submission of a written preliminary report to the FAA, Associate Administrator for Commercial Space Transportation, within five days of any launch site accident. The report must include the following information:

(i) Date and time of occurrence;

(ii) Location of the event;

(iii) Description of the event;

(iv) Number of injuries, if any, and general description of types of injury suffered;

(v) Property damage, if any, and an estimate of its value;

(vi) Identification of hazardous materials, as defined in § 401.5 of this chapter, involved in the event;

(vii) Any action taken to contain the consequences of the event; and

(viii) Weather conditions at the time of the event.

(c) *Response plan.* A launch site accident investigation plan shall contain procedures that—

(1) Ensure the consequences of a launch site accident are contained and minimized;

(2) Ensure data and physical evidence are preserved;

((3) Require the licensee to report to and cooperate with FAA or National Transportation Safety Board (NTSB) investigations and designate one or more points of contact for the FAA or NTSB; and

(4) Require the licensee to identify and adopt preventive measures for avoiding recurrence of the event.

(d) *Investigation plan.* A launch site accident investigation plan shall contain—

(1) Procedures for investigating the cause of a launch site accident, and participating in an investigation of a launch accident for launches launched from the launch site;

(2) Procedures for reporting launch site accident investigation results to the FAA; and

(3) Delineated responsibilities, including responsibilities for personnel assigned to conduct investigations and for any one retained by the licensee to conduct or participate in investigations.

(e) *Applicability of other accident investigation procedures.* Accident investigation procedures developed under 29 CFR 1910.119 and 40 CFR part 68 will satisfy the requirements of paragraphs (c) and (d) of this section to the extent that they include the elements provided in paragraphs (c) and (d) of this section.

§ 420.61 Records.

(a) A licensee shall maintain all records, data, and other material needed to verify that its operations are conducted in accordance with representation contained in the licensee's application. A licensee shall retain records for three years.

(b) In the event of a launch site accident, a licensee shall preserve all records related to the event. Records shall be retained until completion of any federal investigation and the FAA advises the licensee that the records need not be retained.

(c) A licensee shall make available to federal officials for inspection and copying all records required to be maintained under the regulations.

§ 420.63 Explosives.

(a) *Explosive siting.* A licensee shall ensure that the configuration of the launch-site is in acccordance with the licensee's explosive site plan, and that the licensee's explosive site plan is in compliance with the requirements in §§ 420.31–420.37.

(b) *Lightning protection.* A licensee shall ensure that the public is not exposed to hazards due to the initiation of explosives by lightning.

(1) *Elements of a lighting protection system.* Unless an explosive hazard facility meets the conditions of paragraph (b)(3) of this section, all explosive hazard facilities shall have a lightning protection system to ensure explosives are not initiated by lightning. A lightning protection system shall meet the requirements of paragraph (b)(2) of this section and include the following:

(i) *Air terminal.* An air terminal to intentionally attract a lightning strike.

(ii) *Down conductor.* A low impedance path connecting an air terminal to an earth electrode system.

(ii) *Earth electrode system.* An earth electrode system to dissipate the current from a lightning strike to ground.

(2) *Bonding and surge protection.*—(i) *Bonding.* All metallic bodies shall be bonded to ensure that voltage potentials due to lightning are equal everywhere in the explosive hazard facility. Any fence within six feet of a lightning protection system shall have a bond across each gate and other discontinuations and shall be bonded to the lightning protection system. Railroad tracks that run within six feet of the lightning protection system shall be bonded to the lighting protection system.

(ii) *Surge protection.* A lightning protection system shall include surge protection to reduce transient voltages due to lightning to a harmless level for all metallic power, communication, and instrumentation lines coming into an explosive hazard facility.

(3) *Circumtances where no lightning protection system is required.* No lightning protection system is required for an explosive hazard facility when a lightning warning system is available to permit termination of operations and withdrawal of the public to public area distance prior to an electrical storm, or for an explosive hazard facility containing explosives that cannot be initiated by lightning. If no lightning protection system is required, a licensee must ensure the withdrawal of the public to a public area distance prior to an electrical storm.

(4) *Testing and inspection.* Lightning protection systems shall be visually inspected semiannually and shall be tested once each year for electrical continuity and adequacy of grounding. A licensee shall maintain at the explosive hazard facility a record of results obtained from the tests, including any action taken to correct deficiencies noted.

(c) *Electrical Power Lines.* A licensee shall ensure that electric power lines at its launch site meet the following requirements:

(1) Electric power lines shall be no closer to an explosive hazard facility than the length of the lines between the poles or towers than support the lines unless an effective means is provided to ensure that energized lines cannot, on breaking, come in contact with the explosive hazard facility.

(2) Towers or poles supporting electrical distribution lines that carry between 15 and 69 KV, and unmanned electrical substations shall be no closer to an explosive hazard facility than the public area distance for that explosive hazard facility.

(3) Towers or poles supporting electrical transmission lines that carry 69 KV or more, shall be no closer to an explosive hazard facility than the public area distance for that explosive hazard facility.

Issued in Washington, DC on June 10, 1999.

Patricia G. Smith,

Associate Administrator for Commercial Space Transportation.

Appendix A to Part 420—Method for Defining a Flight Corridor

(a) Introduction

(1) This appendix provides a method to construct a flight corridor from a launch point for a guided suborbital launch vehicle or any one of the four classes of guided orbital launch vehicles from table 1, § 420.21, without the use of local meteorological data or a launch vehicle trajectory.

(2) A flight corridor includes an overflight exclusion zone in a launch area and, for a guided suborbital launch vehicle, an impact dispersion area in a downrange area. A flight corridor for a guided suborbital launch vehicle ends with the impact dispersion area, and, for the four classes of guided orbital launch vehicles, 5,000 nautical miles from the launch point.

(b) Data Requirements

(1) Maps. An applicant shall use any map for the launch site region with a scale not less than 1:250,000 inches per inch in the launch area and 1:20,000,000 inches per inch in the downrange area. As described in paragraph (b)(2), an applicant shall use a mechanical method, a semi-automated method, or a fully-automated method to plot a flight corridor on maps. A source for paper maps acceptable to the FAA is the U.S. Dept. of Commerce, National Oceanic and Atmospheric Administration, National Ocean Service.

(i) Projections for mechanical plotting method. An applicant shall use a conic projection. The FAA will accept a ''Lambert-Conformal'' conic projection. A polar aspect of a plane-azimuthal projection may also be used for far northern launch sites.

(ii) Projections for semi-automated plotting method. An applicant shall use cylindrical, conic, or plane projections for semi-automated plotting. The FAA will accept ''Mercator'' and ''Oblique Mercator'' cylindrical projections. The FAA will accept ''Lambert-Conformal'' and ''Albers Equal-Area'' conic projections. The FAA will accept ''Lambert Azimuthal Equal-Area'' and ''Azimuthal Equidistant'' plane projections.

(iii) Projections for fully-automated plotting method. The FAA will accept map projections used by geographical information system software scaleable pursuant to the requirements of paragraph (b)(1).

(2) Plotting Methods.

(i) Mechanical method. An applicant may use mechanical drafting equipment such as pencil, straight edge, ruler, protractor, and compass to plot the location of a flight corridor on a map. The FAA will accept straight lines for distances less than or equal to 7.5 times the map scale on map scales greater than or equal to 1:1,000,000 inches per inch (in/in); or straight lines representing 100 nm or less on map scales less than 1:1,000,000 in/in.

(ii) Semi-Automated method. An applicant may employ the range and bearing techniques in paragraph (b)(3) to create latitude and longitude points on a map. The FAA will accept straight lines for distances less than or equal to 7.5 times the map scale on map scales greater than or equal to 1:1,000,000 inches per inch (in/in); or straight lines representing 100 nm or less on map scales less than 1:1,000,000 in/in.

(iii) Fully-Automated method. An applicant may use geographical information system software with global mapping data scaleable in accordance with paragraph (b)(1).

(3) Range and bearing computations on an ellipsoidal earth model.

(i) To create latitude and longitude pairs on an ellipsoidal earth model, an applicant shall use the following equations to calculate geodetic latitude (+N) and longitude (+E) given the launch point geodetic latitude (+N),

longitude (+E) range (nm), and bearing (degrees, positive clockwise from North).

(A) Input. An applicant shall use the following input in making range and bearing computations:

ϕ_1 = Geodetic latitude of launch point (DDD)
λ_1 = Longitude of launch point (DDD)
S = Range from launch point (nm)
α_{12} = Azimuth bearing from launch point (deg)

(B) Computations. An applicant shall use the following equations to determine the latitude (ϕ_2) and longitude (λ_2) of a target point situated ''S'' nm from the launch point on an azimuth bearing α_{12} degrees.

$$f = 1 - \frac{b}{a} \qquad \text{(Equation A1)}$$

Where:
a = WGS–84 semi-major axis (3443.91846652 nmi)
b = WGS–84 semi-minor axis (3432.37165994 nmi)

$$\varepsilon^2 = \frac{\left(a^2 - b^2\right)}{b^2} \qquad \text{(Equation A2)}$$

$$\theta = \frac{S}{b} \text{ (radians)} \qquad \text{(Equation A3)}$$

$$g = \left(\cos\ \beta_1\right)\left(\cos\ \alpha_{12}\right) \qquad \text{(Equation A5)}$$

$$h = \left(\cos\ \beta_1\right)\left(\sin\ \alpha_{12}\right) \qquad \text{(Equation A6)}$$

$$\beta_1 = \tan^{-1}\left[\frac{\left(b \cdot \sin\ \phi_1\right)}{\left(a \cdot \cos\ \phi_1\right)}\right] \qquad \text{(Equation A4)}$$

$$m = \frac{\left[1 + \left(\frac{\varepsilon^2}{2}\right)\sin^2\ \beta_1\right]\left[1 - h^2\right]}{2} \qquad \text{(Equation A7)}$$

$$n = \frac{\left[1 + \left(\frac{\varepsilon^2}{2}\right)\sin^2\ \beta_1\right]\left[\left(\sin^2\ \beta_1\right)\left(\cos\ \theta\right) + g \cdot \left(\sin\ \beta_1\right)\left(\sin\ \theta\right)\right]}{2} \qquad \text{(Equation A8)}$$

$$L = h \cdot \left[-f \cdot \theta + 3 \cdot f^2 \cdot n \cdot \sin\ \theta + \frac{3 \cdot f^2 \cdot m \cdot \left(\theta - \sin\ \theta \cdot \cos\ \theta\right)}{2}\right] \text{(radians)} \qquad \text{(Equation A9)}$$

$$M = m \cdot \varepsilon^2 \qquad \text{(Equation A10)}$$

$$A_1 = N \cdot \sin\ \theta \qquad \text{(Equation A12)}$$

$$N = n \cdot \varepsilon^2 \qquad \text{(Equation A11)}$$

$$A_{2=}\left(\frac{M}{2}\right)\left(\sin\theta \cdot \cos\theta - \theta\right) \qquad \text{(Equation A13)}$$

$$A_3 = \left(\frac{5}{2}\right)\left(N^2 \cdot \sin\theta \cdot \cos\theta\right) \qquad \text{(Equation A14)}$$

$$A_4 = \left(\frac{M^2}{16}\right)\left(11 \cdot \theta - 13 \cdot \sin\theta \cdot \cos\theta - 8 \cdot \theta \cdot \cos^2\theta + 10 \cdot \sin\theta \cdot \cos^3\theta\right) \qquad \text{(Equation A15)}$$

$$A_5 = \left(\frac{M \cdot N}{2}\right)\left(3 \cdot \sin\theta + 2 \cdot \theta \cdot \cos\theta - 5 \cdot \sin\theta \cdot \cos^2\theta\right) \qquad \text{(Equation A16)}$$

$$\delta = \theta - A_1 + A_2 + A_3 + A_4 + A_5 \text{ (radians)} \qquad \text{(Equation A17)}$$

$$\sin\beta_2 = \sin\beta_1 \cdot \cos\delta + g \cdot \sin\delta \qquad \text{(Equation A18)}$$

$$\cos\beta_2 = \left[h^2 + \left(g \cdot \cos\delta - \sin\beta_1 \cdot \sin\delta\right)^2\right]^{\frac{1}{2}} \qquad \text{(Equation A19)}$$

$$\phi_2 = \left\{\tan^{-1}\left[\frac{\left(a \cdot \sin\beta_2\right)}{\left(b \cdot \cos\beta_2\right)}\right]\right\} \cdot \left(\frac{180}{\pi}\right) \text{(geodetic latitude of target point, DDD)} \qquad \text{(Equation A20)}$$

$$\Lambda = \tan^{-1}\left[\frac{\left(\sin\delta \cdot \sin\alpha_{12}\right)}{\left(\cos\beta_1 \cdot \cos\delta - \sin\beta_1 \cdot \sin\delta \cdot \cos\alpha_{12}\right)}\right] \qquad \text{(Equation A21)}$$

$$\lambda_2 = \left(\lambda_1 + \Lambda + L\right)\left(\frac{180}{\pi}\right) \text{(longitude of target point, DDD)} \qquad \text{(Equation A22)}$$

(ii) To create latitude and longitude pairs on an ellipsoidal earth model, an applicant shall use the following equations to calculate the distance (S) of the geodesic between two points P_1 and P_2), the forward azimuth (α_{12}) of the geodesic at P_1, and the back azimuth (α_{21}) of the geodesic at P_2, given the geodetic latitude (+N), longitude (+E) of P_1 and P_2. Azimuth is measured positively clockwise form the North.

(A) Input. An applicant shall use the following input:

ϕ_1 = Geodetic latitude of point P_1 (DDD)
λ_1 = Longitude of point P_1 (DDD)
ϕ_2 = Geodetic latitude of point P_2 (DDD)
λ_2 = Longitude of point P_2 (DDD)

(B) Computations. An applicant shall use the following equations to determine the distance (S), the forward azimuth (α_{12}) of the geodesic at P_1, and the back azimuth (α_{21}) of the geodesic at P_2,

$$f = 1 - \frac{b}{a} \qquad \text{(Equation A23)}$$

Where:
a = WGS–84 semi-major axis (3443.91846652 nmi)
b = WGS–84 semi-minor axis (3432.37165994 nmi)

$$L = \lambda_2 - \lambda_1 \qquad \text{(Equation A24)}$$

$$\beta_1 = \tan^{-1}\left[\frac{\left(b \cdot \sin\phi_1\right)}{a \cdot \cos\phi_1}\right] \qquad \text{(Equation A25)}$$

$$\beta_2 = \tan^{-1}\left[\frac{\left(b \cdot \sin\phi_2\right)}{a \cdot \cos\phi_2}\right] \qquad \text{(Equation A26)}$$

$$A = \sin\beta_1 \cdot \sin\beta_2 \qquad \text{(Equation A27)}$$

$$B = \cos\beta_1 \cdot \cos\beta_2 \qquad \text{(Equation A28)}$$

$$\cos\delta = A + B \cdot \cos L \qquad \text{(Equation A29)}$$

$$n = \frac{(a-b)}{(a+b)} \qquad \text{(Equation A30)}$$

$$\left(\beta_2 - \beta_1\right) = \left(\phi_2 - \phi_1\right) + 2 \cdot \left[A \cdot \left(n + n^2 + n^3\right) - B \cdot \left(n + n^2 + n^3\right)\right] \cdot \sin\left(\phi_2 - \phi_1\right) \text{ radians} \qquad \text{(Equation A31)}$$

$$\sin\delta = \left\{\left(\sin L \cdot \cos\beta_2\right)^2 + \left[\sin\left(\beta_2 - \beta_1\right) + 2 \cdot \cos\beta_2 \cdot \sin\beta_1 \cdot \sin^2\left(L/2\right)\right]^2\right\}^{\frac{1}{2}} \qquad \text{(Equation A32)}$$

$$\delta = \tan^{-1}\left(\frac{\sin\delta}{\cos\delta}\right) \text{ evaluated in positve radians } \leq \pi \qquad \text{(Equation A33)}$$

$$c = \frac{B \cdot \sin L}{\sin \delta} \qquad \text{(Equation A34)} \qquad\qquad m = 1 - c^2 \qquad \text{(Equation A35)}$$

$$S = b \cdot \left\{ \begin{array}{l} \delta \cdot \left[1 + f + f^2\right] + A \cdot \left[\left(f + f^2\right) \cdot \sin\delta - \left(f^2 \cdot \delta^2\right) / \left(2 \cdot \sin\delta\right)\right] \\ -(m/2)\left[\left(f + f^2\right)\left(\delta + \sin\delta \cdot \cos\delta\right) - \left(f^2 \cdot \delta^2\right) / \left(\tan\delta\right)\right] \\ -\left(A^2 \cdot f^2/2\right) \cdot \sin\delta \cdot \cos\delta \\ +\left(f^2 \cdot m^2/16\right)\left[\delta + \sin\delta \cdot \cos\delta - 2 \cdot \sin\delta \cdot \cos^3\delta - 8\delta^2/\left(\tan\delta\right)\right] \\ +\left(A^2 \cdot m \cdot f^2/2\right)\left[\sin\delta \cdot \cos^2\delta + \delta^2/\left(\sin\delta\right)\right] \end{array} \right\} \qquad \text{(Equation A36)}$$

in the same units as "a" and "b"

$$\Lambda = L + c \cdot \left\{ \begin{array}{l} \delta \cdot \left(f + f^2\right) - \left(A \cdot f^2/2\right)\left[\sin\delta + 2\delta^2/\left(\sin\delta\right)\right] \\ +\left(m \cdot f^2/4\right)\left[\sin\delta\cos\delta - 5\delta + 4\delta^2/\left(\tan\delta\right)\right] \end{array} \right\} \text{radians} \qquad \text{(Equation A37)}$$

$$\alpha_{12} = \tan^{-1}\left\{ \frac{\left(\cos\beta_2 \cdot \sin\Lambda\right)}{\left[\sin\left(\beta_2 - \beta_1\right) + 2 \cdot \cos\beta_2 \cdot \sin\beta_1 \cdot \sin^2\left(\Lambda/2\right)\right]} \right\} \cdot \left(\frac{180}{\pi}\right) \text{degrees} \qquad \text{(Equation A38)}$$

$$\alpha_{21} = \tan^{-1}\left\{ \frac{\left(-\cos\beta_1 \cdot \sin\Lambda\right)}{\left[2 \cdot \cos\beta_1 \cdot \sin\beta_2 \cdot \sin^2\left(\Lambda/2\right) - \sin\left(\beta_2 - \beta_1\right)\right]} \right\} \cdot \left(\frac{180}{\pi}\right) \text{degrees} \qquad \text{(Equation A39)}$$

(c) Creation of a Flight Corridor

(1) To define a flight corridor, an applicant shall:

(i) Select a guided suborbital or orbital launch vehicle, and, for an orbital launch vehicle, select from table 1 in § 420.21 a launch vehicle class that best represents the type of launch vehicle the applicant plans to support at its launch point:

(ii) Select a debris dispersion radius (D_{max}) from table A–1 corresponding to the guided suborbital launch vehicle or orbital launch vehicle class selected in paragraph (c)(1)(i);

(iii) Select a launch point geodetic latitude and longitude; and

(iv) Select a flight azimuth.

(2) An applicant shall define and map an overflight exclusion zone using the following method:

(i) Select a debris dispersion radius (D_{max}) from table A–1 and a downrange distance (D_{oez}) from table A–2 to define an overflight exclusion zone for the guided suborbital launch vehicle or orbital launch vehicle class selected in paragraph (c)(1)(i).

(ii) An overflight exclusion zone is described by the intersection of the following boundaries, which are depicted in figure A1:

(A) An applicant shall define an uprange boundary with a half-circle arc of radius D_{max} and a chord of length twice D_{max} connecting the half-circle arc endpoints. the uprange boundary placement on a map has the chord midpoint positioned on the launch point with the chord oriented along an azimuth ±90° from the launch azimuth and the half-circle arc located uprange from the launch point.

(B) An applicant shall define the downrange boundary with a half-circle arc of radius D_{max} and a chord of length twice D_{max} connecting the half-circle arc endpoints. The downrange boundary placement on a map has the chord midpoint intersecting the nominal flight azimuth line at a distance D_{OEZ} inches downrange with the chord oriented along an azimuth ±90° from the launch azimuth and the half-circle arc located downrange from the intersection of the chord and the flight azimuth line.

(C) Crossrange boundaries of an overflight exclusion zone are defined by two lines segments. Each is parallel to the flight azimuth with one to the left side and one to the right side of the flight azimuth line. Each line connects an uprange half-circle arc endpoint to a downrange half-circle arc endpoint as shown in figure A–1.

(iii) An applicant shall identify the overflight exclusion zone on a map meeting the requirements specified in paragraph (b).

(3) An applicant shall define and map a flight corridor using the following method:

(i) In accordance with paragraph (b), an applicant shall draw a flight corridor on a map(s) with the D_{max} origin centered on the intended launch point and the flight corridor centerline (in the downrange direction) aligned with the initial flight azimuth. The flight corridor is depicted in figure A–2 and its line segment lengths are tabulated in table A–3.

(ii) An applicant shall define the flight corridor using the following boundary definitions:

(A) An applicant shall draw an uprange boundary, which is defined by an arc-line GB (figure A–2), directly uprange from and centered on the intended launch point with radius D_{max}.

(B) An applicant shall draw line CF perpendicular to and centered on the flight azimuth line, and positioned 10 nm downrange from the launch point. The applicant shall use the length of line CF provided in table A–3 corresponding to the guided suborbital launch vehicle or orbital launch vehicle class selected in paragraph (d)(1)(i).

(C) An applicant shall draw line DE perpendicular to and centered on the flight azimuth line, and positioned 100 nm downrange from the launch point. The applicant shall use the length of line DE provided in table A–3 corresponding to the guided suborbital launch vehicle or orbital launch vehicle class selected in paragraph (c)(1)(i).

(D) Except for a guided suborbital launch vehicle, an applicant shall draw a downrange boundary, which is defined by line HI and is drawn perpendicular to and centered on the flight azimuth line, and positioned 5,000 nm downrange from the launch point. The

applicant shall use the length of line HI provided in table A–3 corresponding to the orbital launch vehicle class selected in paragraph (c)(1)(i).

(E) An applicant shall draw crossrange boundaries, which are defined by three lines on the left side and three lines on the right side of the flight azimuth. An applicant shall construct the left flight corridor boundary according to the following, and as depicted in figure A–3:

(1) The first line (line BC in figure A–3) is tangent to the uprange boundary arc, and ends at endpoint C of line CF, as depicted in figure A–3;

(2) The second line (line CD in figure A–3) begins at endpoint C of line BC and ends at endpoint D of line DH, as depicted in figure A–3;

(3) For all orbital launch vehicles, the third line (line DH in figure A–3) begins at endpoint D of line CD and ends at endpoint H of line HI, as depicted in figure A–3; and

(4) For a guided suborbital launch vehicle, the line DH begins at endpoint D of line CD and ends at a point tangent to the impact dispersion area drawn in accordance with paragraph (c)(4) and as depicted in figure A–4.

(F) An applicant shall repeat the procedure in paragraph (c)(3)(ii)(E) for the right side boundary.

(iii) An applicant shall identify the flight corridor on a map meeting the requirements specified in paragraph (b).

(4) For a guided suborbital launch vehicle, an applicant shall define a final stage impact dispersion area as part of the flight corridor and show the impact dispersion area on a map, as depicted in figure A–3, in accordance with the following:

(i) An applicant shall select an apogee altitude (H_{ap}) for the launch vehicle final stage. The apogee altitude should equal the highest altitude intended to be reached by a guided suborbital launch vehicle launched from the launch point.

(ii) An applicant shall define the impact dispersion area by using an impact range factor [$IP(H_{ap})$] and a dispersion factor [$DISP(H_{ap})$] as shown below:

(A) An applicant shall calculate the impact range (D) for the final launch vehicle stage. An applicant shall set D equal to the maximum apogee altitude (H_{ap}) multiplied by the impact range factor as shown below:

$$D = H_{ap} \cdot IP\left(H_{ap}\right) \qquad \text{(Equation A40)}$$

Where:

$IP(H_{ap}) = 0.4$ for an apogee less than 100 km; and

$ip(H_{ap}) = 0.7$ for an apogee 100 km or greater.

(B) An applicant shall calculate the impact dispersion radius (R) for the final launch vehicle stage. An applicant shall set R equal to the maximum apogee altitude (H_{ap}) multiplied by the dispersion factor as shown below:

$$R = H_{ap} \cdot DISP\left(H_{ap}\right) \qquad \text{(Equation A41)}$$

Where:

$DISPH(H_{ap}) = 0.05$

(iii) An applicant shall draw the impact dispersion area on a map with its center on the predicted impact point. An applicant shall then draw line DH in accordance with paragraph (c)(3)(ii)(E)(4).

(d) Evaluate the Flight Corridor

(1) An applicant shall evaluate the flight corridor for the presence of any populated areas. If an applicant determines that no populated area is located within the flight corridor, then no additional steps are necessary.

(2) If a populated area is located in an overflight exclusion zone, an applicant may modify its proposal or demonstrate that there are times when no people are present or that the applicant has an agreement in place to evacuate the public from the overflight exclusion zone during a launch.

(3) If a populated area is located within the flight corridor, an applicant may modify its proposal and create another flight corridor pursuant to appendix A, use appendix B to narrow the flight corridor, or complete a risk analysis as provided in appendix C.

BILLING CODE 4910–13–M

Table A-1: Debris Dispersion Radius (D_{max}) (in)

Orbital Launch Vehicles				Suborbital Launch Vehicles
Small	Medium	Medium Large	Large	Guided
87,600 (1.20 nm)	111,600 (1.53 nm)	127,200 (1.74 nm)	156,000 (2.14 nm)	96,000 (1.32 nm)

Table A-2: Overflight Exclusion Zone Downrange Distance (D_{OEZ}) (in)

Orbital Launch Vehicles				Suborbital Launch Vehicles
Small	Medium	Medium Large	Large	Guided
240,500 (3.30 nm)	253,000 (3.47 nm)	310,300 (4.26 nm)	937,700 (12.86 nm)	232,100 (3.18 nm)

Table A-3: Flight Corridor Line Segment Lengths

D_{max} (in)		Line Segment Lengths (x 10^6 inches)		
Orbital Launch Vehicles		$\overline{CF}$	$\overline{DE}$	$\overline{HI}$
Small	87600 (1.20 nm)	2.87620 (39.45 nm)	8.59452 (117.87 nm)	128.566 (1763.27 nm)
Medium	111,600 (1.53 nm)	2.97220 (40.76 nm)	8.64252 (118.53 nm)	128.566 (1763.27 nm)
Med-Large	127,200 (1.74 nm)	3.03460 (41.62 nm)	8.67372 (118.96 nm)	128.566 (1763.27 nm)
Large	156,000 (2.14 nm)	3.14979 (43.20 nm)	8.73131 (119.75 nm)	128.566 (1763.27 nm)
Suborbital Launch Vehicles		$\overline{CF}$	$\overline{DE}$	$\overline{HI}$
Guided	96,000 (1.32 nm)	2.90980 (39.91 nm)	8.61132 (118.10 nm)	N/A

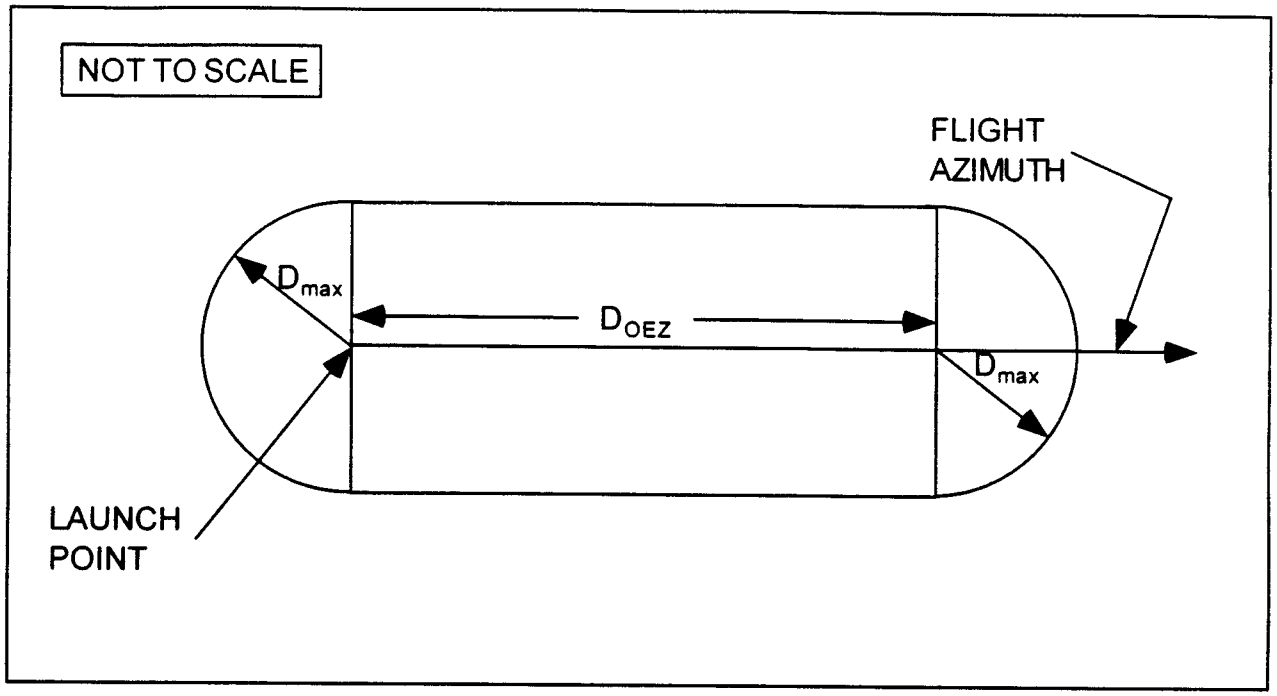

Figure A-1
Overflight Exclusion Zone

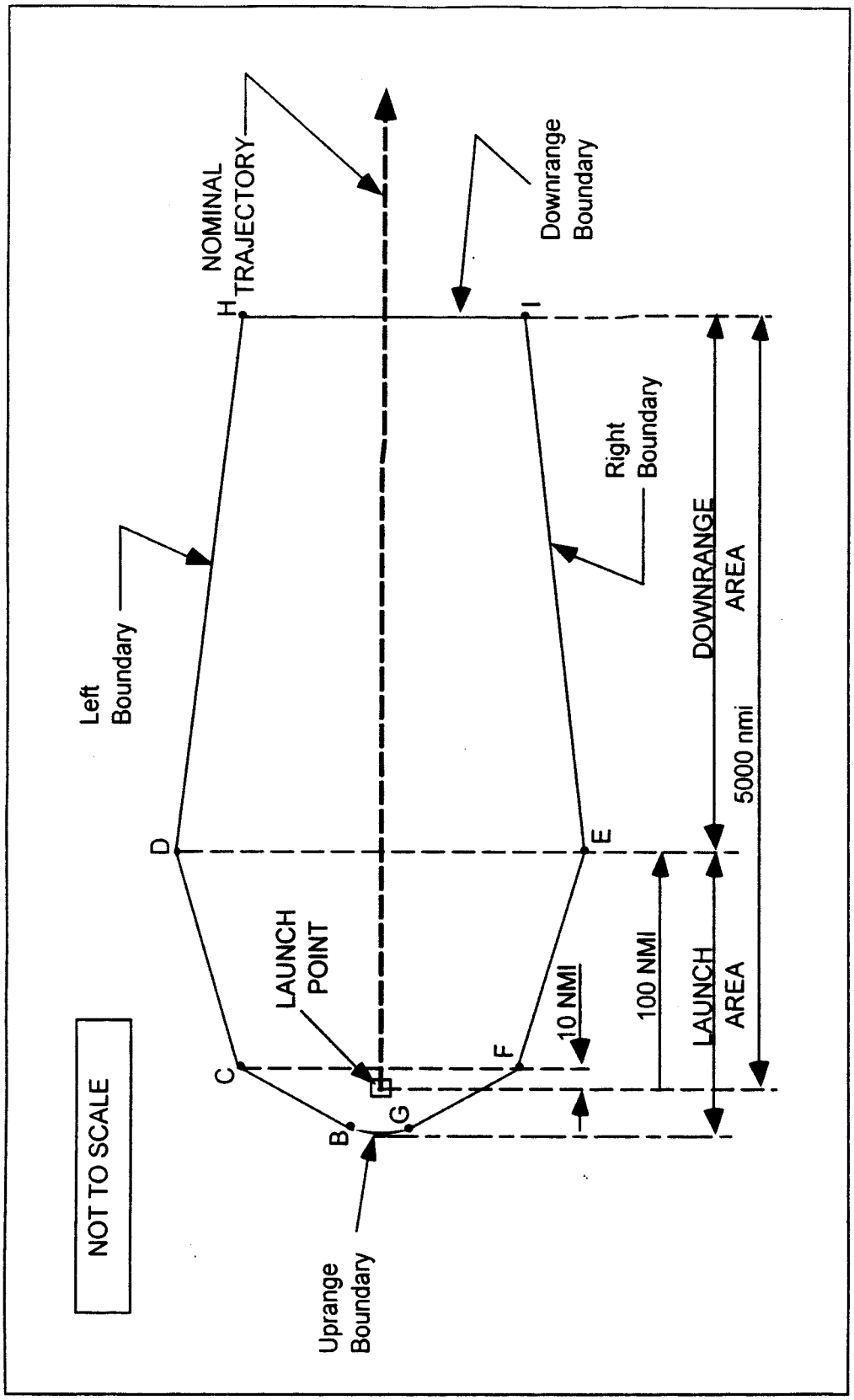

Figure A-2
Flight Corridor

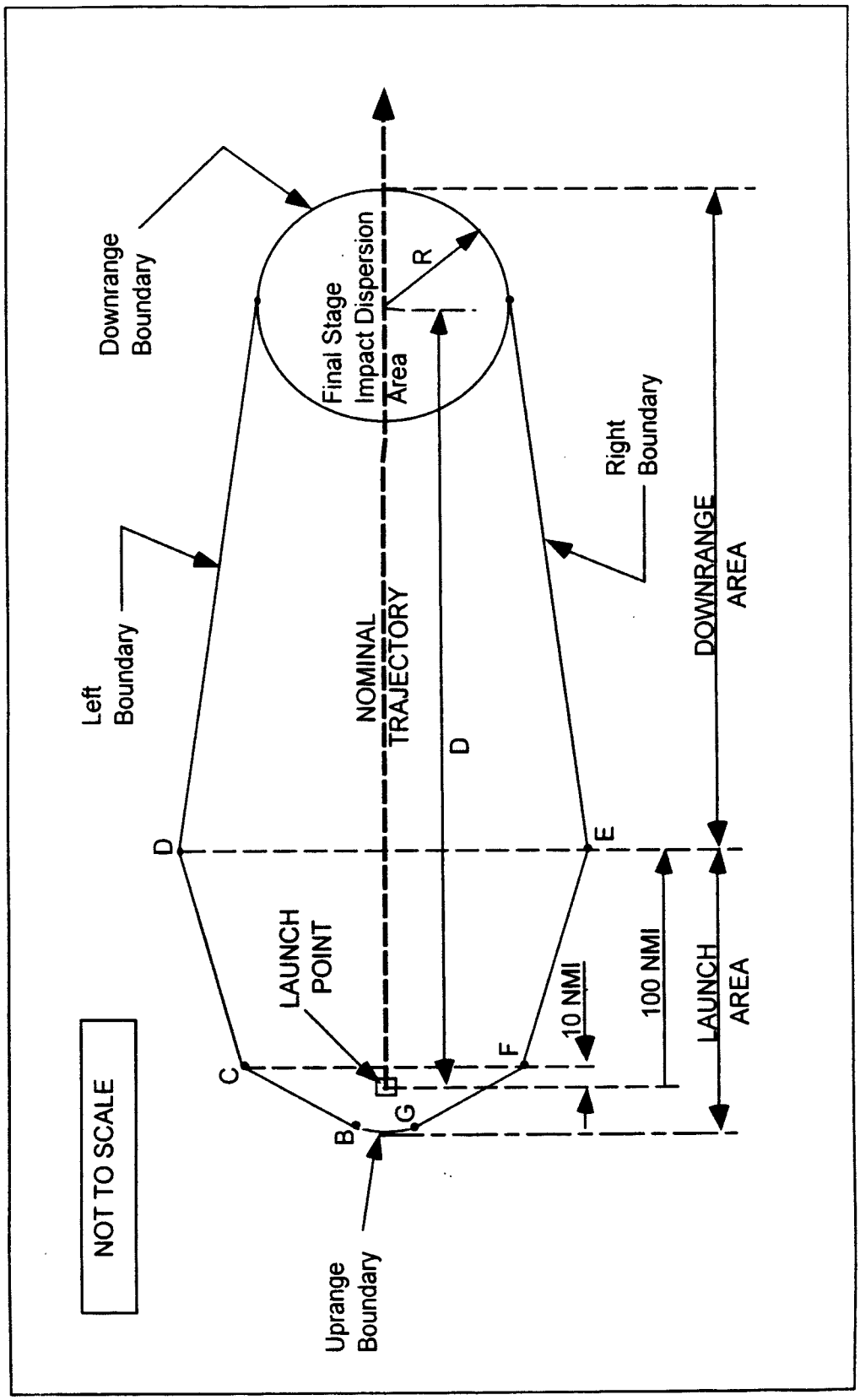

Figure A-4
Flight Corridor for Guided Sub-Orbital Launch Vehicles

BILLING CODE 4910–13–C

Appendix B to Part 420—Method for Defining a Flight Corridor

(a) Introduction

(1) This appendix provides a method to construct a flight corridor from a launch point for a guided suborbital launch vehicle or any one of the four classes of guided orbital launch vehicles from table 1, § 420.21, using local meteorological data and a launch vehicle trajectory.

(2) A flight corridor is constructed in two sections—one section comprising a launch area and one section comprising a downrange area. The launch area of a flight corridor reflects the extent of launch vehicle debris impacts in the event of a launch vehicle failure and applying local meteorological conditions. The downrange area reflects the extent of launch vehicle debris impacts in the event of a launch vehicle failure and applying vehicle imparted velocity, malfunctions turns, and vehicle guidance and performance dispersions.

(3) A flight corridor includes an overflight exclusion zone in the launch area and, for a guided suborbital launch vehicle, an impact dispersion area in the downrange area. A flight corridor for a guided suborbital launch vehicle ends with an impact dispersion area and, for the four classes of guided orbital launch vehicles, 5,000 nautical miles (nm) from the launch point.

(b) Data Requirements

(1) Launch area data requirements. An applicant shall satisfy the following data requirements to perform the launch area analysis of this appendix. The data requirements are identified in table B–1 along with sources where data acceptable to the FAA may be obtained.

(i) An applicant must select meteorological data for the proposed launch site that meet the specifications in table B–1.

TABLE B–1.—LAUNCH AREA DATA REQUIREMENTS

Data category	Data item	Data source
Meteorological Data.	Local statistical wind data versus altitude up to 50,000 feet. Required data are: altitude (ft), atmospheric density (slugs/ft^3), mean East/West meridianal (u) and North/South zonal (v) wind (ft/sec), standard deviation of u and v wind (ft/sec), correlation coefficient, number of observations and wind percentile (%)	These data may be obtained from: Global Gridded Upper Air Statistics, Climate Applications Branch, National Climatic Data Center.
Nominal Trajectory Data.	State vector data versus time after liftoff in topocentric launch point centered X,Y,Z,X,Y,Z coordinates with the X-axis aligned with the flight azimuth. Trajectory time intervals shall not be greater than one second. XYZ units are in feet and X,Y,Z units are in ft/sec	Actual launch vehicle trajectory data; or trajectory generation software meeting requirements in paragraph (b)(1)(ii).
Debris Data	A fixed ballistic coefficient equal to 3 lbs/ft^2 is used for the launch area	N/A.
Geographical Data.	Launch point geodetic latitude on the WGS–84 ellipsoidal earth model	Geographical surveys or Global Positioning System.
	Launch point longitude on an ellipsoidal earth model	
	Maps using scales of not less than 1:250,000 inches per inch within 100 nm of a launch point and 1:20,000,000 inches per inch for distances greater than 100 nm from a launch point	Map types with scale and projection information are listed in the Defense Mapping Agency, Public Sale, Aeronautical Charts and Publications Catalog. The catalog and maps may be ordered through the U.S. Dept. of Commerce, National Oceanic and Atmospheric Administration, National Ocean Service.

(ii) For a guided orbital launch vehicle, an applicant shall obtain or create a launch vehicle nominal trajectory. An applicant may use trajectory data from a launch vehicle manufacturer or generate a trajectory using trajectory simulation software. Trajectory time intervals shall be no greater than one second. If an applicant uses a trajectory computed with commercially available software products, the software must calculate the trajectory using the following parameters, or demonstrated equivalents:

(A) Launch location:

(1) Launch point, using geodetic latitude and longitude to four decimal places; and

(2) Launch point height above sea level.

(B) Ellipsoidal earth:

(1) Mass of earth;

(2) Radius of earth;

(3) Earth flattening factor; and

(4) Gravitational harmonic constants (J2, J3, J4).

(C) Vehicle characteristics:

(1) Mass, as a function of time;

(2) Thrust, as a function of time;

(3) Specific impulse (I_{SP}), as a function of time; and

(4) Stage dimensions.

(D) Launch events:

(1) Stage burn times; and

(2) Stage drop-off times.

(E) Atmosphere:

(1) Density vs. altitude;

(2) Pressure vs. altitude;

(3) Speed of sound vs. altitude; and

(4) Temperature vs. altitude.

(F) Winds:

(1) Wind direction vs. altitude; and

(2) Wind magnitude vs. altitude.

(I) Aerodynamics; drag coefficient vs. mach number for each stage of flight showing subsonic, transonic and supersonic mach regions for each stage.

(iii) An applicant shall use a ballistic coefficient (β) of 3 lbs/ft^2 for debris impact computations.

(iv) An applicant shall satisfy the map and plotting requirements for a launch area in appendix A, paragraph (b).

(2) Downrange area data requirements. An applicant shall satisfy the following data requirements to perform the downrange area analysis of this appendix.

(i) The launch vehicle class and method of generating a trajectory used in the launch area shall be used by an applicant in the downrange area as well. Trajectory time intervals must not be greater than one second.

(ii) An applicant shall satisfy the map and plotting data requirements for a downrange area in appendix A, paragraph (b).

(c) Construction of a Launch Area of a Flight Corridor

(1) An applicant shall construct a launch area of a flight corridor using the processes and equations of this paragraph for a single trajectory position. An applicant shall repeat these processes at time points on the launch vehicle trajectory in time intervals no greater than one second. When choosing wind data, an applicant shall select a time period between one and 12 months.

(2) A launch area analysis must include all trajectory positions whose Z-values are less than or equal to 50,000 ft.

(3) Each trajectory time is denoted by the subscript ''i''. Height intervals for a given atmospheric pressure level are denoted by the subscript ''j''.

(4) Using data from the GGUAS CD-ROM, an applicant shall estimate the mean atmospheric density, maximum wind speed, height interval fall times and height interval debris dispersions for 15 mean geometric height intervals.

(i) The height intervals in the GGUAS source data vary as a function of the following 15 atmospheric pressure levels (milibars): Surface, 1000, 850, 700, 500, 400, 300, 250, 200, 150, 100, 70, 50, 30, 10. The actual geometric height associated with each pressure level varies depending on the time

of year. An applicant shall estimate the mean geometric height over the period of months selected in subparagraph (1) of this paragraph for each of the 15 pressure levels as shown in equation B1.

$$\overline{H}_j = \frac{\sum_{m=1}^{k} h_m \cdot n_m}{\sum_{m=1}^{k} n_m} \qquad \text{(Equation B1)}$$

Where:

$\overline{H}_j$=mean geometric height
h_m=geometric height for a given month
n_m=number of observations for a given month
k=number of wind months of interest

(ii) The atmospheric densities in the source data also vary as a function of the 15 atmospheric pressure levels. The actual atmospheric density associated with each pressure level varies depending on the time of year. An applicant shall estimate the mean atmospheric density over the period of months selected in subparagraph (1) of this paragraph for each of the 15 pressure levels as shown in equation B2.

$$\overline{P}_j = \frac{\sum_{m=1}^{k} P_m \cdot n_m}{\sum_{m=1}^{k} n_m} \qquad \text{(Equation B2)}$$

Where:

$\overline{p}_j$=mean atmospheric density
ρ_m=atmospheric density for a given month
n_m=number of observation for a given month
k=number of wind months of interest

(iii) An applicant shall estimate the algebraic maximum wind speed at a given pressure level as follows and shall repeat the process for each pressure level.

(A) For each month, an applicant shall calculate the monthly mean wind speed ($\overline{W}_{az}$) for 360 azimuths using equation B3;

(B) An applicant shall select the maximum monthly mean wind speed from the 360 azimuths;

(C) An applicant shall repeat subparagraphs (c)(4)(iii)(A) and (B) for each month of interest; and

(D) An applicant shall select the maximum mean wind speed from the range of months. The absolute value of this wind is designated W_{max} for the current pressure level.

(iv) An applicant shall calculate speed using the means for winds from the West (u) and winds from the North (v). An applicant shall use equation B3 to resolve the winds to a specific azimuth bearing.

$$\overline{W}_{az} = u \cdot \cos(90 - az) + v \cdot \sin(90 - az) \qquad \text{(Equation B3)}$$

Where:

az=wind azimuth
u=West zonal wind component
v=North zonal wind component
$\overline{W}_{az}$=mean wind speed at azimuth for each month

(v) An applicant shall estimate the interval fall time over a height interval assuming the initial descent velocity is equal to the terminal velocity (V_T). An applicant shall use equations B4 through B6 to estimate the fall time over a given height interval.

$$\Delta H_j = \overline{H}_{j+1} - \overline{H}_j \qquad \text{(Equation B4)}$$

$$V_{Tj} = \left[\frac{2 \cdot \beta}{\frac{\left(\overline{\rho}_{j+1} + \overline{\rho}_j\right)}{2}} \right]^{0.5} \qquad \text{(Equation B5)}$$

$$t_j = \frac{\Delta H_j}{V_{T_j}} \qquad \text{(Equation B6)}$$

Where:

ΔH_j=height difference between two mean geometric heights
β=ballistic coefficient
$\overline{p}_x$=mean atmospheric density for the corresponding mean geometric heights
v_{Tj}=terminal velocity

(vi) An applicant shall estimate the interval debris dispersion (D_j) by multiplying the interval fall time by the algebraic maximum mean wind speed (W_{max}) as shown in equation B7.

$$D_j = t_j \cdot W_{max} \qquad \text{(Equation B7)}$$

(5) Once the D_j are estimated for each height interval, an applicant shall determine the total debris dispersion (D_i) for each Z_i using a linear interpolation and summation exercise. An applicant shall use a launch point height of zero equal to the surface level of the nearest GGUAS grid location and is shown below in equation B8.

$$D_i = D_j \cdot \left(\frac{Z_i - \overline{H}_j}{\overline{H}_{J+1} - \overline{H}_j} \right) + \sum_{n=1}^{j-1} D_n \qquad \text{(Equation B8)}$$

Where:

n=number of height intervals below j^{th} height interval

(6) Once all the D_i radii have been calculated, an applicant shall produce a launch area flight corridor according to instructions in subparagraphs (c)(6)(i)–(iv).

(i) On a map meeting the requirements of appendix A, paragraph (b), an applicant shall plot the X_i position location on the flight azimuth for the corresponding Z_i position;

(ii) An applicant shall draw a circle of radius D_i centered on the corresponding X_i position; and

(iii) An applicant shall repeat the instructions in subparagraphs (c)(6)(i)–(ii) for each D_i radius.

(iv) The launch area of a flight corridor is the enveloping line that encloses the outer boundary of the D_i circles as shown in Fig. B–1. The uprange portion of a flight corridor is described by a semi-circle arc that is a portion of either the most uprange D_i dispersion circle, or the overflight exclusion zone (defined in subparagraph (c)(7)), whichever is further uprange.

(7) An applicant shall define an overflight exclusion zone in the launch area pursuant to the instructions provided in appendix A, subparagraph (c)(2).

(8) An applicant shall draw the launch area flight corridor and overflight exclusion zone on a map(s) meeting the requirements of table B–1.

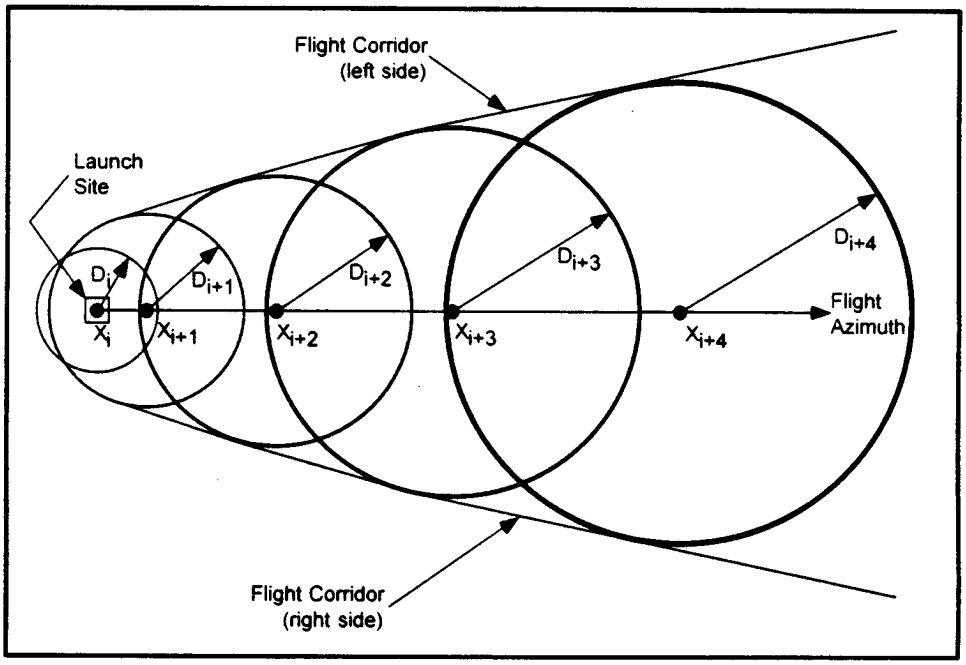

Figure B - 1: Launch Area of a Flight Corridor

(d) Construction of a downrange area of a flight corridor

(1) The downrange area analysis estimates the debris dispersion for the downrange time points on a launch vehicle trajectory. An applicant shall perform the downrange area analysis using the processes and equations of this paragraph.

(2) The downrange area analysis shall include trajectory positions at a height (the Z_i-values) greater than 50,000 feet and nominal trajectory IIP values less than or equal to 5,000 nm. For a guided suborbital launch vehicle, the final IIP value that an applicant must consider is the launch vehicle final stage impact point. Each trajectory time shall be one second or less and is denoted by the subscript ''i''.

(3) An applicant shall compute the downrange area of a flight corridor boundary in four steps, from each trajectory time increment: Determine a reduction ratio factor; calculate the launch vehicle position after simulating a malfunction turn; rotate the state vector after the malfunction turn in the range of three degrees to one degree as a function of X_i distance downrange; and compute the IIP of the resulting trajectory. The locus of IIPs describes the boundary of the downrange area of a flight corridor. An applicant shall use the following subparagraphs, (d)(3)(i)–(v), to compute the downrange area of the flight corridor boundary:

(i) Compute the downrange distance to the final IIP position for a nominal trajectory as follows:

(A) Using equations B30 through B69, determine the IIP coordinates (ϕ_{max}, λ_{max}) for the nominal state vector before the launch vehicle enters orbit where α in equation B30 is the nominal flight azimuth angle measured from True North.

(B) Using the range and bearing equations in appendix A, paragraph (b)(3), determine the distance (S_{max}) from the launch point coordinates (ϕ_{lp} λ_{lp}) to the IIP coordinates (ϕ_{max}, λ_{max}) computed in (3)(i)(A) of this paragraph.

(C) The distance for S_{max} may not exceed 5000 mm. In cases when the actual value exceeds 5000 nm the applicant shall use 5000 nm for S_{max}.

(ii) Compute the reduction ratio factor (F_{ri}) for each trajectory time increment as follows:

(A) Using equations B30 through B69, determine the IIP coordinates (ϕ_i, λ_i) for the nominal state vector where α in equation B30 is the nominal flight azimuth angle measured from True North.

(B) Using the range and bearing equations in appendix A, paragraph (b)(3), determine the distance (S_i) from the launch point coordinates (ϕ_{lp} λ_{lp}) to the IIP coordinates (ϕ_i, λ_i) computed in (3)(ii)(A) of this paragraph.

(C) The reduction ratio factor is:

$$F_{ri} = \left(1 - \frac{S_i}{S_{max}}\right) \qquad \text{(Equation B9)}$$

(iii) An applicant shall compute the launch vehicle position and velocity components after a simulated malfunction turn for each X_i, using the following method.

(A) Turn duration (Δt)= 4 sec.

(B) Turn angle (Θ).

$\Theta=(F_{ri})$ * 45 degrees.

The turn angle equations perform a turn in the launch vehicle's yaw plane, as depicted in figure B–2.

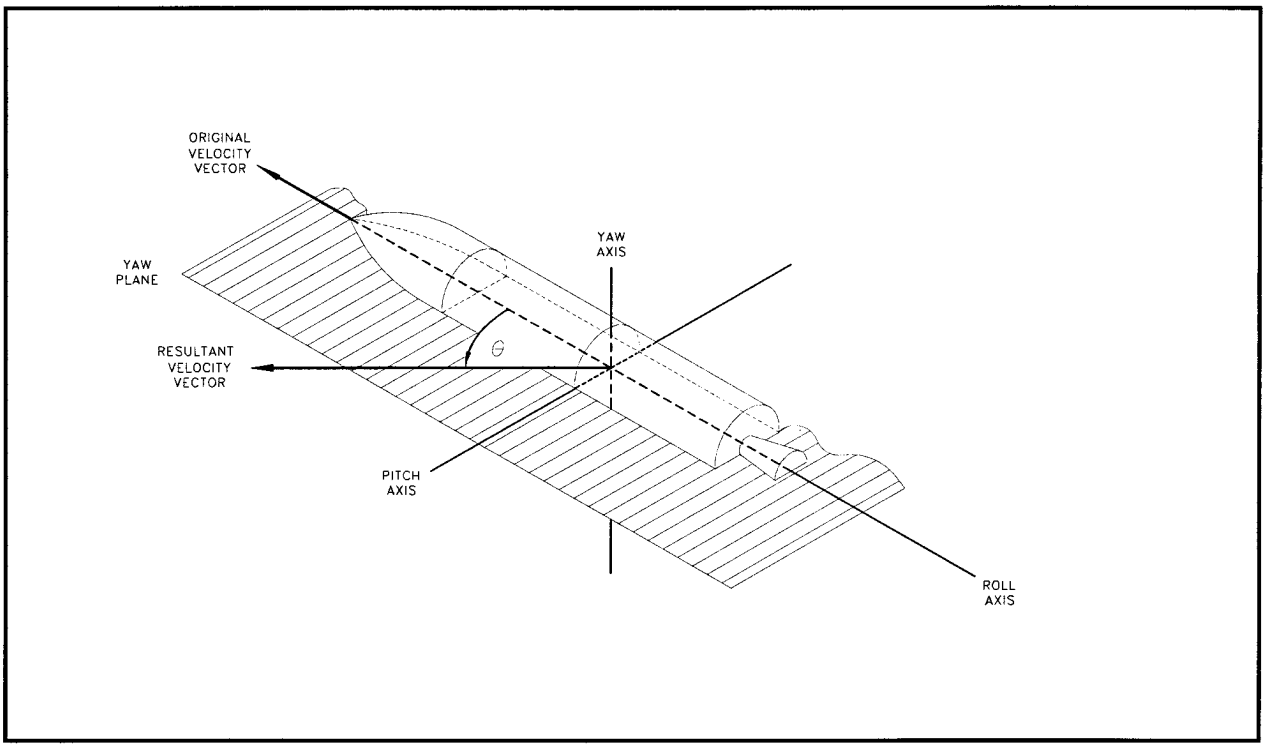

Figure B-2: Velocity Vector Turn Angle in Yaw Plane

(C) Launch vehicle velocity magnitude at the beginning of the turn (V_b) and velocity magnitude at the end of the turn (V_e).

$$\theta = (F_{ri}) * 45 \text{ degrees.} \quad \text{(Equation B10)}$$

$$V_b = \left(\dot{X}_i^2 + \dot{Y}_i^2 + \dot{Z}_i^2\right)^{0.5} \text{ ft/sec} \quad \text{(Equation B11)}$$

(D) Average velocity magnitude over the turn duration (V).

$$\overline{V}_i = \frac{(V_b + V_e)}{2} \text{ ft/sec} \quad \text{(Equation B13)}$$

(E) Velocity vector path angle (γ_i) at turn epoch.

$$\gamma_i = \tan^{-1}\left[\frac{\dot{Z}_i}{\left(\dot{X}_i^2 + \dot{Y}_i^2\right)^{0.5}}\right] \quad \text{(Equation B14)}$$

(F) Launch vehicle position components at the end of turn duration.

$$X_{90L} = X_i + \nabla_i \cdot \Delta t \cdot \cos\left(\frac{-\theta}{2}\right) \cdot \cos(\gamma_i)$$

$$X_{90R} = X_i + \nabla_i \cdot \Delta t \cdot \cos\left(\frac{\theta}{2}\right) \cdot \cos(\gamma_i)$$

$$Y_{90L} = Y_i + \nabla_i \cdot \Delta t \cdot \sin\left(\frac{-\theta}{2}\right)$$

$$Y_{90R} = Y_i + \nabla_i \cdot \Delta t \cdot \sin\left(\frac{\theta}{2}\right)$$

$$Z_{90L} = Z_i + \nabla_i \cdot \Delta t \cdot \cos\left(\frac{-\theta}{2}\right) \cdot \sin(\gamma_i) - \left(\frac{1}{2}\right) \cdot g_1 \cdot \Delta t^2$$

$$Z_{90R} = Z_i + \nabla_i \cdot \Delta t \cdot \cos\left(\frac{\theta}{2}\right) \cdot \sin(\gamma_i) - \left(\frac{1}{2}\right) \cdot g_1 \cdot \Delta t^2 \qquad \text{(Equations B15 – B20)}$$

Where:
g_i=32.17405 ft/sec.^{2}

(G) Launch vehicle velocity components at the end of turn duration.

$$\dot{X}_{90L} = (X_{90L} - X_i) / \Delta t$$

$$\dot{X}_{90R} = (X_{90R} - X_i) / \Delta t$$

$$\dot{X}_{90L} = \left|(X_{90L} - X_i) / \Delta t\right|$$

$$\dot{Y}_{90R} = (-1) \cdot \left|(Y_{90R} - Y_i) / \Delta t\right| \qquad \text{(Equations B21 – B26)}$$

$$\dot{Z}_{90L} = (Z_{90L} - Z_i) / \Delta t$$

$$\dot{Z}_{90R} = (Z_{90R} - Z_i) / \Delta t$$

(iv) An applicant shall rotate the trajectory state vector at the end of the turn duration to the right and left to define the right-lateral flight corridor boundary and the left-lateral flight corridor boundary, respectively. An applicant shall perform perform the trajectory rotation in conjunction with a trajectory transformation from the X_{90}, Y_{90}, Z_{90}, $\dot{X}_{90}$, $\dot{Y}_{90}$, $\dot{Z}_{90}$ components to E,N,U,$\dot{E}$,$\dot{N}$,$\dot{U}$. The trajectory subscripts ''R'' and ''L'' from equations B15 and B26 have been discarded to reduce the number of equations. An applicant shall transform from E,N,U,$\dot{E}$,$\dot{N}$,$\dot{U}$ to E,F,G,$\dot{E}$,$\dot{F}$,$\dot{G}$. An applicant shall use the equations of paragraph (d)(3)(iv)(A)–(F) to produce the EFG components necessary to estimate each instantaneous impact point.

(A) An applicant must calculate the flight angle (α).

$$\Delta\alpha_i = 3 - 2 \cdot f_1 \cdot (1 - F_{ri}) \quad \text{(Equation B27)}$$

$$\alpha_{Li} = (\text{Flight Azimuth} - \Delta\alpha_i)$$

for left lateral boundary computations (Equation B28)

or

$$\alpha_{Ri} = (\text{Flight Azimuth} + \Delta\alpha_i)$$

for right lateral boundary computations

$$f_1 = \begin{Bmatrix} 0.0 : F_{ri} \geq 0.8 \\ 1.0 : F_{ri} < 0.8 \end{Bmatrix} \qquad \text{(Equation B29)}$$

(B) An applicant shall transform X_{90}, Y_{90}, Z_{90} to E,N,U.

$$E = X_{90} \sin(\alpha) - Y_{90} \cos(\alpha)$$
$$N = X_{90} \cos(\alpha) + Y_{90} \sin(\alpha)$$
$$U = Z_{90} \qquad \text{(Equation B30-32)}$$

(C) An applicant shall transform $\dot{X}_{90}$, $\dot{Y}_{90}$, $\dot{Z}_{90}$ to $\dot{E}_{90}$ to $\dot{E}$,$\dot{N}$,$\dot{U}$.

$$\dot{E} = \dot{X}_{90} \sin(\alpha) - \dot{Y}_{90} \cos(\alpha)$$
$$\dot{N} = \dot{X}_{90} \cos(\alpha) + \dot{Y}_{90} \sin(\alpha) \qquad \text{(Equation B33-B35)}$$
$$\dot{U} = \dot{Z}_{90}$$

(D) An applicant shall transform the launch point coordinates (Φ_o, λ_o, h_o) to E_o, F_o, G_o.

$$R = \alpha_E \left\{ 1 - e^2 \left[\sin^2(\phi_0) \right] \right\}^{-0.5}$$
$$\text{where: } a_E = 20925646.3255 \text{ ft}$$
$$e^2 = 0.00669437999013 \qquad \text{(Equation B36-B39)}$$
$$E_0 = (R + h_0)\cos(\phi_0)\cos(\lambda_0)$$
$$F_0 = (R + h_0)\cos(\phi_0)\sin(\lambda_0)$$
$$G_0 = \left[R(1 - e^2) + h_0 \right] \sin(\phi_0)$$

(E) An applicant shall transform E,N,U to E_{90}, F_{90}, G_{90}.

$$E_{90} = E\cos(270 - \lambda_0) + N\cos(90 - \phi_0)\sin(270 - \lambda_0) - U\sin(90 - \phi_0)\sin(270 - \lambda_0) + E_0$$
$$F_{90} = E\sin(270 - \lambda_0) + N\cos(90 - \phi_0)\cos(270 - \lambda_0) - U\sin(90 - \phi_0)\cos(270 - \lambda_0) + F_0$$
$$G_{90} = N\sin(90 - \phi_0) + U\cos(90 - \phi_0) + G_0 \qquad \text{(Equation B40-B42)}$$

(F) An applicant shall transform $\dot{E}$,$\dot{N}$,$\dot{U}$ to $\dot{E}$,$\dot{F}$,$\dot{G}$.

$$\dot{E}_{90} = \dot{E}\cos(270 - \lambda_0) + \dot{N}\cos(90 - \phi_0)\sin(270 - \lambda_0) - \dot{U}\sin(90 - \phi_0)\sin(270 - \lambda_0)$$
$$\dot{F}_{90} = \dot{E}\sin(270 - \lambda_0) + \dot{N}\cos(90 - \phi_0)\cos(270 - \lambda_0) - \dot{U}\sin(90 - \phi_0)\cos(270 - \lambda_0)$$
$$\dot{G}_{90} = \dot{N}\sin(90 - \phi_0) + \dot{U}\cos(90 - \phi_0) \qquad \text{(Equation B43-B45)}$$

(v) The IIP computation implements an iterative solution to the impact point problem. An applicant shall solve Equations B46 to B69, with the appropriate substitutions, up to a maximum of five times. Each repetition of the equations provides a more accurate prediction of the IIP. The required IIP computations are shown in subsection (d)(3)(v)(A)–(W) below. An applicant shall use this computation for both the left- and right-lateral offsets. The IIP computations will result in latitude and longitude pairs for the left-lateral flight corridor boundary and the right-lateral flight corridor boundary. An applicant shall use the lines connecting the latitude and longitude pairs to describe the entire downrange area boundary of the flight corridor up to 5000 nm or a final stage impact dispersion area.

(A) An applicant shall approximate the radial distance ($\Gamma_{k,l}$) from the geocenter to the IIP. The distance from the center of the earth ellipsoid to the launch point shall be used for the initial approximation of $r_{k,l}$ as shown in equation B46.

$$r_{k \cdot l} = \left(E_0^2 + F_0^2 + G_0^2 \right)^{0.5} \qquad \text{(Equation B46)}$$

(B) An applicant shall compute the radial distance (r) from the geocenter to the launch vehicle position.

$$r = \left(E_{90}^2 + F_{90}^2 + G_{90}^2 \right)^{0.5} \qquad \text{(Equation B47)}$$

If $r < r_{k,l}$ then the launch vehicle position is below the Earth's surface and an impact point cannot be computed. An applicant

must restart the calcuations with the next trajectory state vector.

(C) An applicant shall compute the inertial velocity components.

$$\dot{E}l_{90} = \dot{E}_{90} - \omega \cdot F_{90}$$

$$\dot{F}l_{90} = \dot{F}_{90} + \omega \cdot E_{90} \quad \text{(Equation B48-49)}$$

Where:

$\omega = 4.178074 \times 10^{-3}$ deg/sec

(D) An applicant shall compute the magnitude of the inertial velocity vector.

$$v_0 = \left(\dot{E}l_{90}^2 + \dot{F}l_{90}^2 + \dot{G}_{90}^2\right)^{0.5} \quad \text{(Equation B50)}$$

(E) An applicant shall compute the eccentricity of the trajectory ellipse multiplied by the cosine of the eccentric anomaly at epoch. (ε_c).

$$\varepsilon_c = \left(\frac{r \cdot v_0^2}{K}\right) - 1 \quad \text{(Equation B51)}$$

Where:

$K = 1.407644 \times 10^{16}$ ft^3/sec^2

(F) An applicant shall compute the semi-major axis of the trajectory ellipse (a_t).

$$a_r = \frac{r}{(1 - \varepsilon_c)} \quad \text{(Equation B52)}$$

If $a_t < 0$ or $a_t > \infty$ then the trajectory orbit is not elliptical, but is hyperbolic or parabolic, and an impact point cannot be computed. The launch vehicle has achieved escape velocity and the applicant may terminate computations.

(G) An applicant shall compute the eccentricity of the trajectory ellipse multipled by the sine of the eccentric anomaly at epoch (ε_s).

$$\varepsilon_s = \frac{\left(E_{90}\dot{E}I_{90} + F_{90}\dot{F}I_{90} + G_{90}\dot{G}_{90}\right)}{\left(K \cdot a_t\right)^{0.5}} \quad \text{(Equation B53)}$$

(H) An applicant shall compute the eccentricity of the trajectory ellipse squared (ε^2).

$$\varepsilon^2 = \left(\varepsilon_c^2 + \varepsilon_s^2\right) \quad \text{(Equation B54)}$$

If $[a\tau(1-\varepsilon)-a\varepsilon] > 0$ and $\varepsilon \geq 0$ then the trajectory perigee height is positive and an impact point cannot be computed. The launch vehicle has achieved earth orbit and the applicant may terminate computations.

(I) An applicant shall computer the eccentricity of the trajectory ellipse multiplied by the cosine of the eccentric anomaly at impact (ε_{c_k}).

$$\varepsilon_{c_k} = \frac{\left(a_t - r_{k.1}\right)}{a_t} \quad \text{(Equation B55)}$$

(J) An applicant shall compute the eccentrity of the trajectory ellipse multiplied by the sine of the eccentric anomaly at impact (ε_{s_k}).

$$\varepsilon_{s_k} = -\left(\varepsilon^2 - \varepsilon_{C_k}^2\right)^{0.5} \quad \text{(Equation B56)}$$

If $\varepsilon_{s_k} < 0$ then the trajectory orbit does not intersect the Earth's surface and an impact point cannot be computed. The launch vehicle has achieved earth orbit and the applicant may terminate computations.

(K) An applicant shall compute the cosine of the difference between the eccentric anomaly at impact and the eccentric anomaly at epoch ($\Delta\varepsilon_{c_k}$).

$$\Delta\varepsilon_{c_k} = \frac{\left(\varepsilon_{c_k} \cdot \varepsilon_c\right) + \left(\varepsilon_{s_k} \cdot \varepsilon_s\right)}{\varepsilon^2} \quad \text{(Equation B57)}$$

(L) An applicant shall compute the sine of the difference between the eccentric anomaly at impact and the eccentric anomaly at epoch $\Delta\varepsilon_{s_k}$).

$$\Delta\varepsilon_{s_\lambda} = \frac{\left(\varepsilon_{s_k} \cdot \varepsilon_c\right) - \left(\varepsilon_{c_k} \cdot \varepsilon_s\right)}{\varepsilon^2} \quad \text{(Equation B58)}$$

(M) An applicant shall compute the f-series expansion of Kepler's equations.

$$f_2 = \frac{\left(\Delta\varepsilon_{c_k} - \varepsilon_c\right)}{\left(1 - \varepsilon_c\right)} \quad \text{(Equation B59)}$$

(N) An applicant shall compute the g-series expansion of Kepler's equations.

$$g_2 = \left(\Delta\varepsilon_{s_k} + \varepsilon_s - \varepsilon_{s_k}\right)\left(\frac{a_t^3}{K}\right)^{0.5} \quad \text{(Equation B60)}$$

(O) An applicant shall compute the E,F,G coordinates at impact (E_i,F_i,G_i).

$$E_k = f_2 \cdot E_{90} + g_2 \cdot \dot{E}I_{90}$$
$$F_k = f_2 \cdot F_{90} + g_2 \cdot \dot{F}I_{90}$$
$$G_k = f_2 \cdot G_{90} + g_2 \cdot \dot{G}_{90} \qquad \text{(Equation B61- B63)}$$

(P) An applicant shall approximate the distance from the geocenter to the launch vehicle position at impact ($r_{k,2}$).

$$r_{k\cdot 2} = \frac{a_E}{\left[\left(\frac{e^2}{1-e^2}\right)\left(\frac{G_k}{r_{k\cdot 1}}\right)^2 + 1\right]^{0.5}} \qquad \text{(Equation B64)}$$

Where:

a_E=20925646.3255 ft

e^2=0.00669437999013

(Q) An applicant shall let $r_{k+1,1}=r_{k,2}$, substitute $r_{k+1,1}$ for $r_{k,1}$ in equation B55 and repeat equations B55–B64 up to four more times incrementing ''k'' by one on each loop (e.g. κε{1, 2, 3, 4, 5}). If $|r_{5,1} - r_{5,2}|>1$ then the iterative solution does not converge and an impact point does not meet the accuracy tolerance of plus or minus one foot. An applicant must try more iterations, or restart the calculations with the next trajectory state vector.

(R) An applicant shall compute the difference between the eccentric anomaly at impact and the eccentric anomaly at epoch (Δε).

$$\Delta\varepsilon = \tan^{-1}\left(\frac{\Delta\varepsilon_{v_5}}{\Delta\varepsilon_{c_5}}\right) \qquad \text{(Equation B65)}$$

(S) An applicant shall compute the time of flight from epoch to impact (t).

$$t = \left(\Delta\varepsilon + \varepsilon_s - \varepsilon_{s_5}\right)\left(\frac{\alpha_t^3}{K}\right)^{0.5} \qquad \text{(Equation B66)}$$

(T) An applicant shall compute the geocentric latitude at impact (ϕ′).

$$\phi_i' = \sin^{-1}\left(\frac{G_5}{r_{5.2}}\right) \qquad \text{(Equation B67)}$$

Where:

$+90° \geq \phi'^{o}_i \geq -90°$

(U) An applicant shall compute the deodetic latitude at impact (ϕ).

$$\phi_i = \tan^{-1}\left[\frac{\tan(\phi_i')}{(1-e^2)}\right] \qquad \text{(Equation B68)}$$

Where:

$+90° \geq \phi'^{o}_i \geq -90°$

(V) An applicant shall compute the East longitude at impact (λ).

$$\lambda_i = \tan^{-1}\left(\frac{F_5}{E_5}\right) - \omega t \qquad \text{(Equation B69)}$$

(W) If the range from the launch point to the impact point is equal to or greater than 5000nm, an applicant shall terminate IIP computations.

(4) For a guided suborbital launch vehicle, an applicant shall define a final stage impact dispersion area as part of the flight corridor and show the area on a map using the following procedure:

(i) For equation B70 below, an applicant shall use an apogee altitude (H_{ap}) corresponding to the highest altitude reached by the launch vehicle final stage in the applicant's launch vehicle trajectory analysis done in accordance with paragraph (b)(1)(ii).

(ii) An applicant shall define the final stage impact dispersion area by using a dispersion factor [DISP(H_{ap})] as shown below. An applicant shall calculate the impact dispersion radius (R) for the final launch vehicle stage. An applicant shall set R equal to the maximum apogee altitude (H_{ap}) multiplied by the dispersion factor as shown below:

$$R = H_{ap} \cdot \mathrm{DISP}(H_{ap}) \qquad \text{(Equation B70)}$$

Where:

DISP(H_{ap}) =0.05

(5) An applicant shall combine the launch area and downrange area flight corridor and any final stage impact dispersion area for a guided suborbital launch vehicle.

(i) On the same map with the launch area flight corridor, an applicant shall plot the latitude and longitude positions of the left and right sides of the downrange area of the flight corridor calculated in subparagraph (d)(3).

(ii) An applicant shall connect the latitude and longitude positions of the left side of the downrange area of the flight corridor sequentially starting with the last IIP calculated on the left side and ending with the first IIP calculated on the left side. An applicant shall repeat this procedure for the right side.

(iii) An applicant shall connect the left sides of the launch area and downrange portions of the flight corridor. An applicant shall repeat this procedure for the right side.

(iv) An applicant shall plot the overflight exclusion zone defined in subparagraph (c)(7).

(v) An applicant shall draw any impact dispersion area on the downrange map with the center of the impact dispersion area on the launch vehicle final stage point obtained from the applicant's launch vehicle trajectory analysis done in accordance with subparagraph (b)(1)(ii).

(e) Evaluate the Launch Site

(1) An applicant shall evaluate the flight corridor for the presence of populated areas. If no populated area is located within the flight corridor, then no additional steps are necessary.

(2) If a populated area is located in an overflight exclusion zone, an applicant may modify its proposal or demonstrate that there are times when no people are present or that the applicant has an agreement in place to evacuate the public from the overflight exclusion zone during a launch.

(3) If a populated area is located within the flight corridor, an applicant may modify its proposal or complete an overflight risk analysis as provided in appendix C.

Appendix C to Part 420—Risk Analysis

(a) Introduction

(1) This appendix provides a method for an applicant to estimate the expected casualty (E_c) for a launch of a guided launch vehicle using a flight corridor generated either by appendix A or appendix B. This appendix also provides an applicant options to simplify the method where population at risk is minimal.

(2) An applicant shall perform a risk analysis when a populated area is located within a flight corridor defined by either

appendix A or appendix B. If the estimated expected casualty exceeds 30×10^{-6}, an applicant may either modify its proposal, or if the flight corridor used was generated by the appendix A method, use the appendix B method to narrow the flight corridor and then redo the overflight risk analysis pursuant to this appendix C. If the estimated expected casualty still exceeds 30×10^{-6}, the FAA will not approve the location of the proposed launch point.

(b) Data Requirements

(1) An applicant shall obtain the data specified in subparagraphs (b)(2) and (3) and summarized in table C–1, Table C–1 provides sources where an applicant may obtain data acceptable to the FAA. An applicant will also employ the flight corridor information from appendix A or B, including flight azimuth and, for an appendix B flight corridor, trajectory information.

(2) Population Data. Total population (N) and the total landmass area within a populated area (A) are required. Population data up to and including 100 nm from the launch point are required at the U.S. census block group level. Population data downrange from 100 nm are required at no greater than 1°×1° latitude/longitude grid coordinates.

(3) Launch Vehicle Data. These data consist of the launch vehicle failure probability (P_f), the launch vehicle effective casualty area (A_c), trajectory position data, and the overflight dwell time (t_d). The failure probability is a constant (P_f=0.10) for a guided orbital or suborbital launch vehicle. Table C–3 provides effective casualty area data based on IIP range. Trajectory position information is provided from distance computations given in this appendix for an appendix A flight corridor, or trajectory data used in appendix B for an appendix B flight corridor. The dwell time (t_d) may be determined from trajectory data produced when creating an appendix B flight corridor.

TABLE C–1.—OVERFLIGHT ANALYSIS DATA REQUIREMENTS

Data category	Data item	Data source
Population Data	Total population within a populated area (N).	Within 100 nm of the launch point: U.S. census data at the census block-group level. Downrange from 100 nm beyond the launch point, world population data are available from:
	Total landmass area within the populated area (A).	Carbon Dioxide Information Analysis Center (CDIAC). Oak Ridge National Laboratory. Database—Global Population Distribution (1990), Terrestrial Area and Country Name Information on a One by One Degree Grid Cell Basis (DB1016 (8–1996)).
Launch Vehicle Data	Failure probability—P_f=0.10	N/A.
	Effective casualty area (A_c)	See table C–3.
	Overflight dwell time	Determined by range from the launch point or trajectory used by applicant.
	Nominal Trajectory Data (for an appendix B flight corridor only).	See appendix B, table B–1.

(c) Estimating Corridor Casualty Expectation

(1) A corridor casualty expectation [E(Corridor)] estimate is the sum of the expected casualty measurement of each populated area inside a flight corridor.

(2) An applicant shall identify and locate each populated area in the proposed flight corridor.

(3) An applicant shall determine the probability of impact in each populated area using the procedures in subparagraphs (5) or (6) of this paragraph. Figures C–1 and C–2 show an area considered for probability of impact (P_i) computations by the dashed-lined box around the populated area within a flight corridor, and figure C–3 shows a populated area in a final stage impact dispersion area. An applicant shall then estimate the E_c for each populated area using the procedures in subparagraphs (7) and (8) of this paragraph.

(4) The P_i computations do not directly account for populated areas whose areas are bisected by an appendix A flight corridor centerline or an appendix B nominal trajectory ground trace. Accordingly, an applicant must evaluate P_i for each of the bisections as two separate populated area, as shown in figure C–4, which shows one bisection to the left of an appendix A flight corridor's centerline and one on its right.

(5) Probability of Impact (P_i) Computations for a Populated Area in an appendix A Flight Corridor. An applicant shall computer P_i. for each populated area using the following method:

(i) For the launch and downrange areas, but not a final stage impact dispersion area for a guided suborbital launch vehicle, an applicant shall compute P_i, for each populated area using the following equation:

$$P_i = \frac{\left(\frac{|y_2 - y_1|}{\sigma_y}\right)}{6\sqrt{2\pi}} \cdot \left(\exp\left(\frac{-\left(\gamma_1/\sigma_\gamma\right)^2}{2}\right) + 4 \cdot \exp\left[\frac{-\left(\frac{y_1 + y_2}{2\sigma_y}\right)^2}{2}\right] + \exp\left(\frac{-\left(\gamma_2/\sigma_\gamma\right)^2}{2}\right)\right) \cdot \left[\frac{P_f}{C} \cdot \frac{(x_2 - x_1)}{\dot{R}}\right] \qquad \text{(Equation C1)}$$

Where:

x_1, x_2 = closest and farthest downrange distance (nm) along the flight corridor centerline to the populated area (see figure C–1)

y_1, y_2 = closest and farthest cross range distance (nm) to the populated area measured from the flight corridor centerline (see figure C–1)

σ_y = one-fifth of the cross range distance from the centerline to the flight corridor boundary (see figure C–1)

exp = exponential function (e^x)

P_f = probability of failure = 0.10

R = IIP range rate (nm/sec) (see table C-2)

C = 643 seconds (constant)

TABLE C–2.—IIP RANGE RATE VS. IIP RANGE

IIP range (nm)	IIP range rate (nm/s)
0–75	0.75
76–300	1.73
301–900	4.25
901–1700	8.85
1701–2600	19.75

TABLE C–2.—IIP RANGE RATE VS. IIP RANGE—Continued

IIP range (nm)	IIP range rate (nm/s)
2601–3500	42.45
3500–4500	84.85

TABLE C–2.—IIP RANGE RATE VS. IIP RANGE—Continued

IIP range (nm)	IIP range rate (nm/s)
4501–5250	154.95

(ii) For each populated area within a final stage impact dispersion area, an applicant shall compute P_i using the following method:

(A) An applicant shall estimate the probability of final stage impact in the x and y sectors of each populated area within the final stage impact dispersion area using equations C2 and C3:

$$P_x = \frac{\left(\frac{|x_2 - x_1|}{\sigma_x}\right)}{6\sqrt{2\pi}} \cdot \left(\exp\left(\frac{-\left(x_1/\sigma_x\right)^2}{2} \right) + 4 \cdot \exp\left[\frac{-\left(\frac{x_1 + x_2}{2\sigma_x}\right)^2}{2} \right] + \exp\left(\frac{-\left(x_2/\sigma_x\right)^2}{2} \right) \right) \qquad \text{(Equation C2)}$$

Where:

x_1, x_2 = closest and farthest downrange distance, measured along the flight corridor centerline, measured from the nominal impact point to the populated area (see figure C–3)

σ_x = one-fifth of the impact dispersion radius (see figure C–3)

exp = exponential function (e^x)

$$P_y = \frac{\left(\frac{|y_2 - y_1|}{\sigma_y}\right)}{6\sqrt{2\pi}} \cdot \left(\exp\left(\frac{-\left(\gamma_1/\sigma_\gamma\right)^2}{2} \right) + 4 \cdot \exp\left[\frac{-\left(\frac{y_1 + y_2}{2\sigma_y}\right)^2}{2} \right] + \exp\left(\frac{-\left(\gamma_2/\sigma_\gamma\right)^2}{2} \right) \right) \qquad \text{(Equation C3)}$$

Where:

y_1, y_2 = closest and farthest cross range distance to the populated area measured from the flight corridor centerline (see figure C–3)

σ_y = one-fifth of the impact dispersion radius (see figure C–3)

exp = exponential function (e^x)

(B) If a populated area intersects the impact dispersion area boundary so that the x_2 or y_2 distance would otherwise extend outside the impact dispersion area, the x_2 or y_2 distance should be set equal to the impact dispersion area radius. The x_2 distance for populated area A in figure C–3 is an example, If a populated area intersects the flight azimuth, an applicant shall solve equation C3 by obtaining the solution in two parts. An applicant shall determine, first, the probability between $y_1 = 0$ and $y_2 = a$ and, second, the probability between $y_1 = 0$ and $y_2 = b$, as depicted in figure C–4. The probability P_y is then equal to the sum of the probabilities of the two parts. If a populated area interests the line that is normal to the flight azimuth on the impact point, an applicant shall solve equation C2 by obtaining the solution in two parts in a similar manner with the values of x.

(C) An applicant shall calculate the probability of impact for each populated area using equation C4 below:

$$P_i = P_s \cdot P_x \cdot P_y \qquad \text{(Equation C4)}$$

Where:

$P_s = 1 - P_f = 0.90$

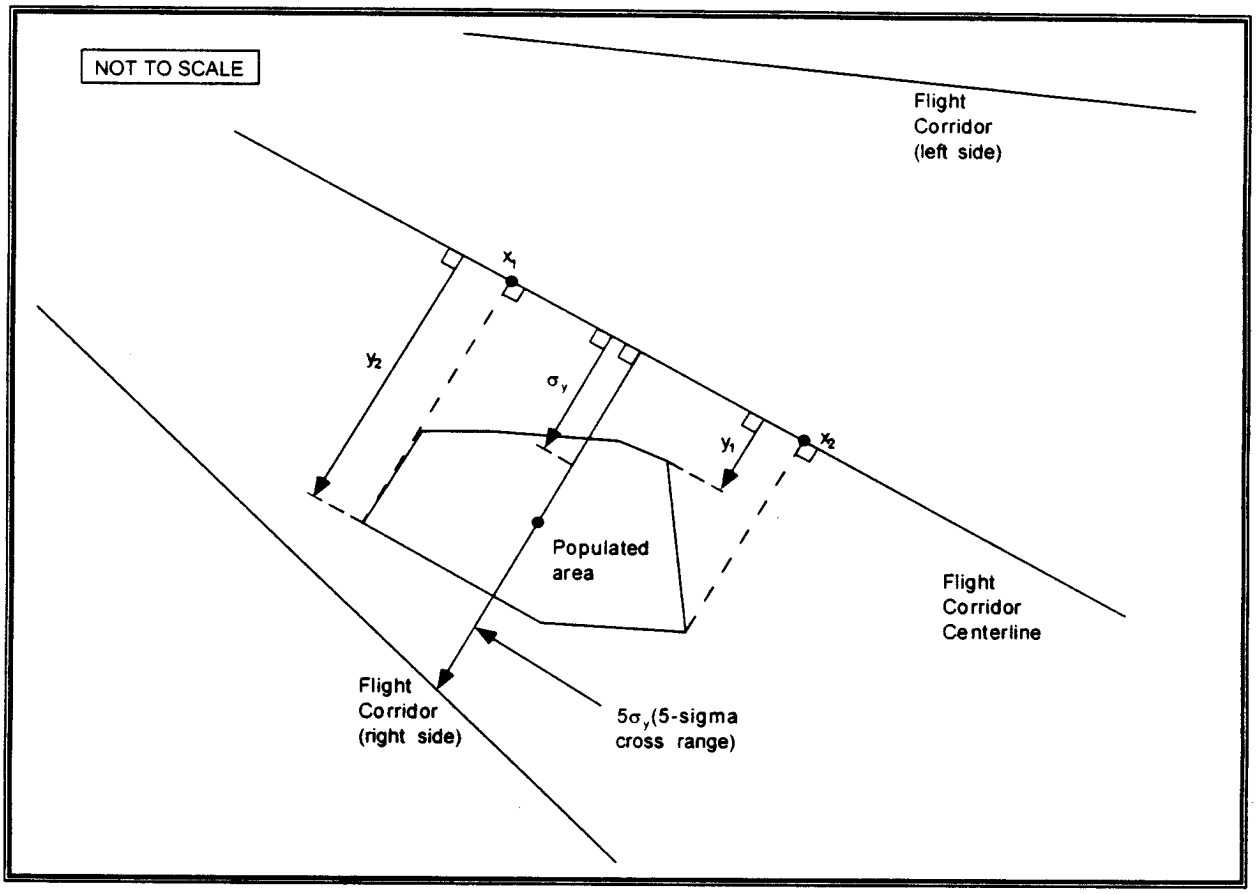

Figure C-1: Analysis of an Appendix A Flight Corridor

(6) Probability of Impact Computations for a Populated Area in an appendix B Flight Corridor. An applicant shall compute P_i using the following method:

(i) For the launch and downrange areas, but not a final stage impact dispersion area for a guided suborbital launch vehicle, an applicant shall compute P_i for each populated area using the following equation:

$$P_i = \frac{\left(\frac{|y_2 - y_1|}{\sigma_y}\right)}{6\sqrt{2\pi}} \cdot \left(\exp\left(\frac{-\left(\gamma_1 / \sigma_y\right)^2}{2} \right) + 4 \cdot \exp\left[\frac{-\left(\frac{y_1 + y_2}{2\sigma_y}\right)^2}{2} \right] + \exp\left(\frac{-\left(\gamma_2 / \sigma_y\right)^2}{2} \right) \right) \cdot \left(\frac{P_f}{t} \cdot t_d \right) \qquad \text{(Equation C5)}$$

Where:

y_1, y_2 = closest and farthest cross range distance (nm) to a populated area measured from the nominal trajectory IIP ground trace (see figure C–2)

σ_y = one-fifth of the cross range distance (nm) from nominal trajectory to the flight corridor boundary (see figure C–2)

exp = exponential function (e^x)

P_f = probability of failure = 0.10

t = flight time from lift-off to orbital insertion (seconds)

t_d = overflight dwell time (seconds)

(ii) For each populated area within a final stage impact dispersion area, an applicant shall compute P_i using the following method:

(A) An applicant shall estimate the probability of final stage impact in the x and y sectors of each populated area within the final stage impact dispersion area using equations C6 and C7:

$$P_x = \frac{\left(\frac{|x_2 - x_1|}{\sigma_x}\right)}{6\sqrt{2\pi}} \cdot \left(\exp\left(\frac{-\left(x_1/\sigma_x\right)^2}{2}\right) + 4 \cdot \exp\left[\frac{-\left(\frac{x_1 + x_2}{2\sigma_x}\right)^2}{2}\right] + \exp\left(\frac{-\left(x_2/\sigma_x\right)^2}{2}\right)\right) \quad \text{(Equation C6)}$$

Where:

x_1, x_2 = closest and farthest downrange distance, measured along nominal trajectory IIP ground trace, measured from the nominal impact point to the populated area (see figure C–3)

σ_x = one-fifth of the impact dispersion radius (see figure C–3)

exp = exponential function (e^x)

$$P_y = \frac{\left(\frac{|y_2 - y_1|}{\sigma_y}\right)}{6\sqrt{2\pi}} \cdot \left(\exp\left(\frac{-\left(\gamma_1/\sigma_\gamma\right)^2}{2}\right) + 4 \cdot \exp\left[\frac{-\left(\frac{y_1 + y_2}{2\sigma_y}\right)^2}{2}\right] + \exp\left(\frac{-\left(\gamma_2/\sigma_\gamma\right)^2}{2}\right)\right) \quad \text{(Equation C7)}$$

Where:

y_1, y_2 = closest and farthest cross range distance to the populated area measured form the nominal trajectory IIP ground trace (see figure C–3)

σ_y = one-fifth of the impact dispersion radius (see figure C–3)

exp = exponential function (e^x)

(B) If a populated area intersects the impact dispersion area boundary so that the x_2 or y_2 distance would otherwise extend outside the impact dispersion area, the x_2 or y_2 distance should be set equal to the impact dispersion area radius. The x_2 distance for populated area A in figure C–3 is an example. If a populated area intersects the flight azimuth, an applicant shall solve equation C7 by obtaining the solution in two parts. An applicant shall determine, first, the probability between $y_1 = 0$ and $y_2 = a$ and, second, the probability between $y_1 = 0$ and $y_2 = b$, as depicted in figure C–4. The probability P_y is then equal to the sum of the probabilities of the two parts. If a populated area interests the line that is normal to the flight azimuth on the impact point, an applicant shall solve equation C6 by obtaining the solution in two parts in a similar manner with the values of x.

(C) An applicant shall calculate the probability of impact for each populated area using equation C8 below:

$$P_i = P_s \cdot P_x \cdot P_y \quad \text{(Equation C8)}$$

Where:

$P_s = 1 - P_f = 0.90$

BILLING CODE 4910–13–M

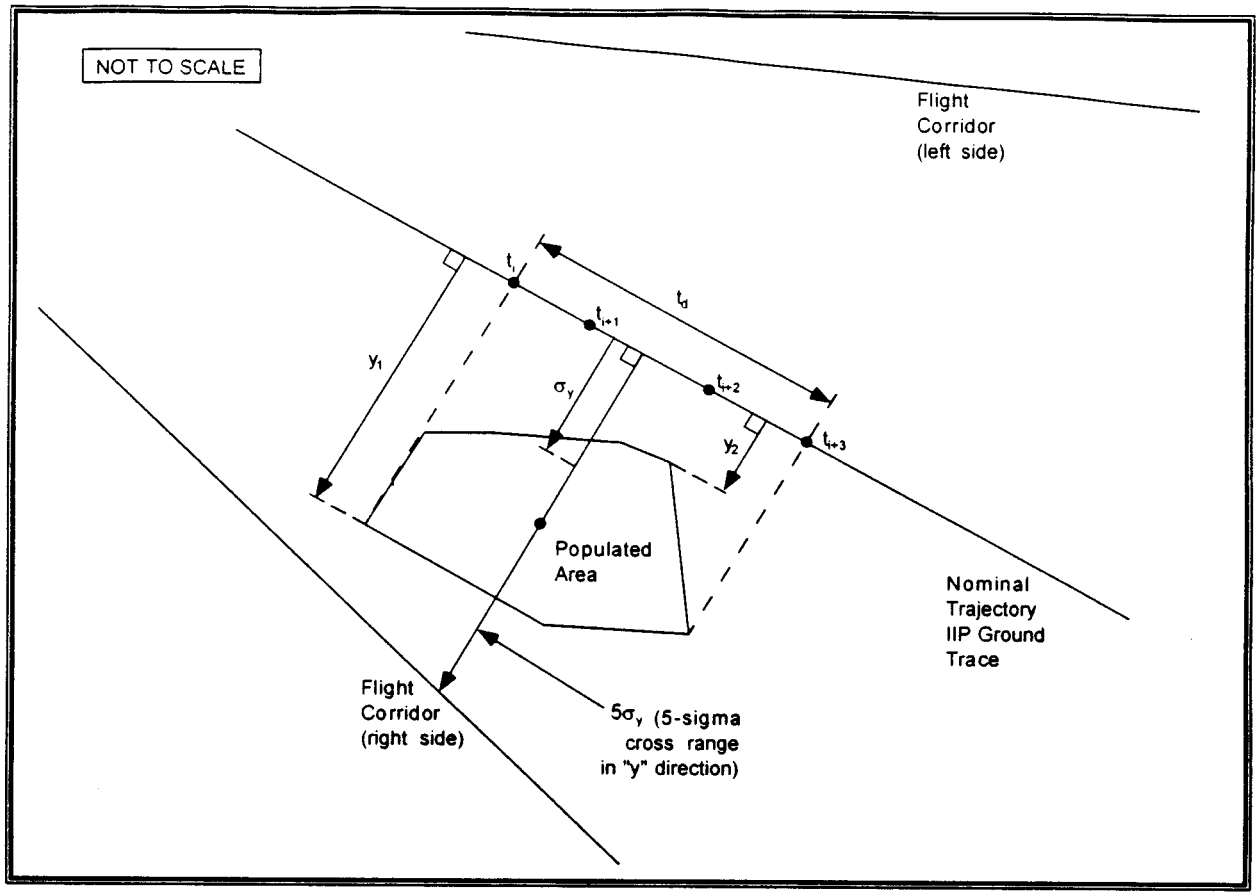

Figure C-2: Analysis of an Appendix B Flight Corridor

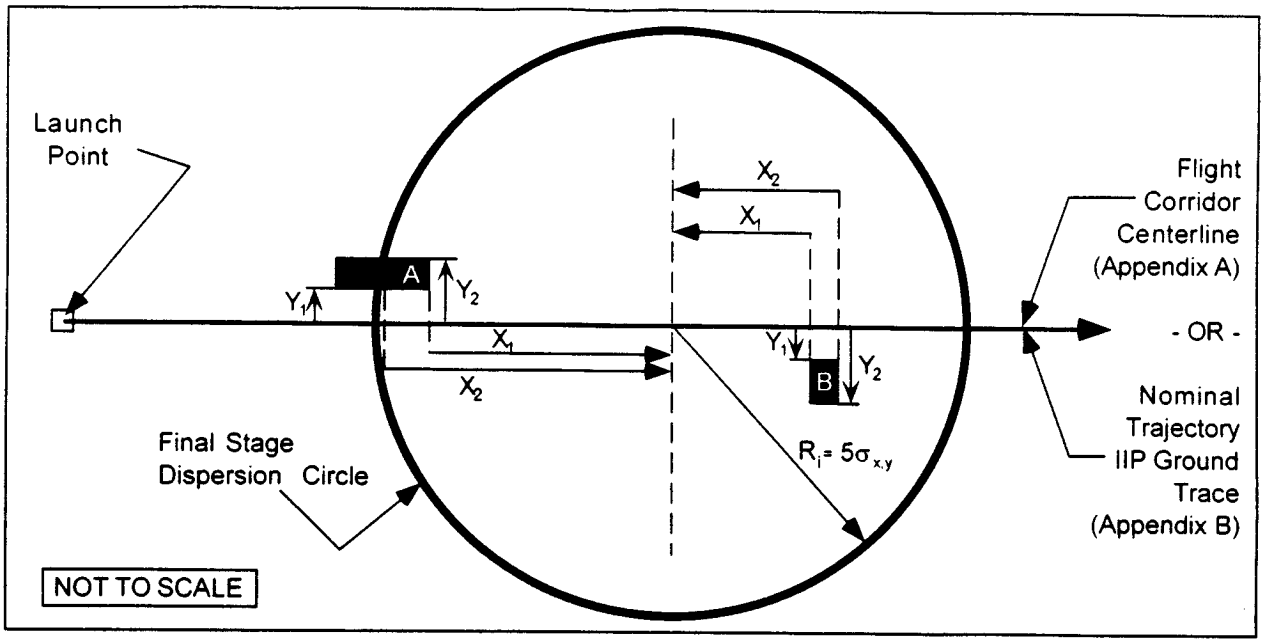

Figure C-3: Appendix A and B Final Stage Impact Risk Analysis

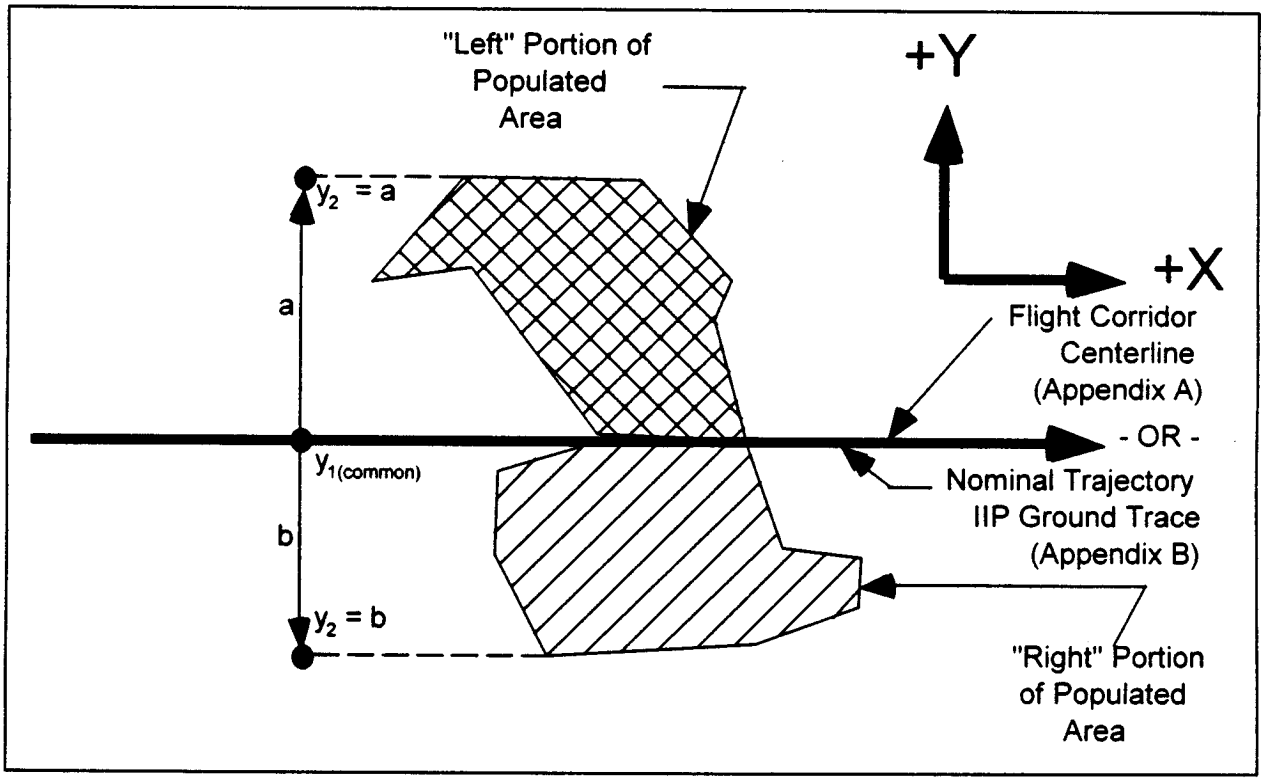

Figure C-4: Flight Azimuth Intersecting a Populated Area

BILLING CODE 4910–13–C

(7) Using the P_i calculated in either subparagraph (c)(5) or (6) of this paragraph, an applicant shall calculate the casualty expectancy for each populated area within the flight corridor. E_{ck} is the casualty expectancy for a given populated area as shown in equation C9, where individual populated areas are designated with the subscript ''k''.

$$E_{ck} = P_i \cdot \left(\frac{A_c}{A_k}\right) \cdot N_k \qquad \text{(Equation C9)}$$

Where:
A_c = casualty area (from table C–3)
A_k = populated area
N_k = population in A_k

TABLE C–3—EFFECTIVE CASUALTY AREA (MILES^2) vs. IIP Range (nm)

Orbital launch vehicles					Suborbital launch vehicles
IIP Range (nmi)	Small	Medium	Medium large	Large	Guided
0–49	0.43	0.53	0.71	1.94	0.43
50–1749	0.13	0.0022	0.11	0.62	0.13
1750–5000	3.59×10^{-6}	8.3×10^{-4}	1.08×10^{-1}	7.17×10^{-1}	3.59×10^{-6}

(8) An applicant shall estimate the total corridor risk using the following summation of risk, including a multiplier of two, as shown in equation C10.

$$Ec(\text{Corridor}) = 2 \cdot \left(\sum_{k=1}^{n} E_{c_k}\right) \qquad \text{(Equation C10)}$$

(9) Alternative Casualty Expectancy (E_c) Analyses. An applicant may employ specified variations to the analysis defined in subparagraphs (c)(1)–(8). Those variations are identified in subparagraphs (9)(i) through (vi) of this paragraph. Subparagraphs (i) through (iv) permits an applicant to make conservative assumptions that would lead to an overestimation of the corridor E_c compared with the analysis defined in subparagraphs (c)(1)–(8). In subparagraphs (v) and (vi), an applicant that would otherwise fail the analysis prescribed by subparagraphs (c)(1)–(8) may avoid (c)(1)–(8)'s overestimation of the probability of impact in each populated area. An applicant employing a variation shall identify the variation used, show and discuss the specific assumptions made to a modify the analysis defined in subparagraphs (c)(1)–(8), and demonstrate how each assumption leads to overestimation of the corridor E_c compared with the analysis defined in subparagraphs (c)(1)–(c)(8).

(i) Assume that P_x and P_y have a value of 1.0 for all populated areas.

(ii) Combine populated areas into one or more larger populated areas, and use a population density for the combined area or areas equal to the most dense populated area.

(iii) for any given populated area, assume P_y has a value of one.

(iv) For any given P_x sector (an area spanning the width of a flight corridor and bounded by two time points on the trajectory IIP ground trace) P_y has a value of one and use a population density for the sector equal to the most dense populated area.

(v) For a given populated area, divided the populated area into smaller rectangles, determined P_i for each individual rectangle, and sum the individual impact probabilities to determine P_i for thee entire populated area.

(vi) For a given populated area, use the ratio of the populated area to the area of the P_i rectangle from the subparagraph (c)(1)–(8) analysis.

(d) Evaluation of Results

(1) If the estimated expected casualty does not exceed 30×10^{-6}, the FAA will approve the launch site location.

(2) If the estimated expected casualty exceeds 30×10^{-6}, then an applicant may either modify its proposal, or, if the flight corridor used was generated by the appendix A method, use the appendix B method to narrow the flight corridor and then perform another appendix C risk analysis.

Appendix D to Part 420—Impact Dispersion Area and Casualty Expectancy Estimate for an Unguided Suborbital Launch Vehicle

(a) Introduction

(1) This appendix provides an method for determining the acceptability of the location of a launch point from which an unguided suborbital launch vehicle would be launched. The appendix describes how to define an overflight exclusion zone and impact dispersion areas, and how to evaluate whether the public risk presented by the launch of an unguided suborbital launch vehicle remains at acceptable levels.

(2) An applicant shall base its analysis on an unguided suborbital launch vehicle whose final launch vehicle stage apogee represents the intended use of the launch point.

(3) An applicant shall use the apogee of each stage of an existing unguided suborbital launch vehicle with a final launch vehicle stage apogee equal to the one proposed, and calculate each impact range and dispersion area using the equations provided.

(4) This appendix also provides a method of performing an impact risk analysis that estimates the expected casualty (E_c) within each impact dispersion area. This appendix provides an applicant options to simplify the method where population at risk is minimal.

(5) If the E_c is less than or equal to 30×10^{-6}, the FAA will approve the launch point for unguided suborbital launch vehicles. If the E_c exceeds 30×10^{-6}, the proposed launch point will fail the launch site location review.

(b) Data Requirements

(1) An applicant shall employ the apogee of each stage of an existing unguided suborbital launch vehicle whose final stage apogee represents the maximum altitude to be reached by unguided suborbital launch vehicles launched from the launch point. The apogee shall be obtained from one or more actual flights of an unguided suborbital launch vehicle launched at an 84 degree elevation.

(2) An applicant shall satisfy the map and plotting data requirements in appendix A, paragraph (b).

(3) Population Data. An applicant shall use total population (N) and the total landmass are within a populated area (A) for all populated areas within an impact dispersion area. Population data up to and including 100 nm from the launch point are required at the U.S. census block group level. Population data downrange from 100 nm are required at no greater than $1° \times 1°$ latitude/longitude grid coordinates.

(c) Overflight Exclusion Zone and Impact Dispersion Area

(1) An applicant shall choose a flight azimuth from a launch point.

(2) An applicant shall define an overflight exclusion zone as a circle with a radius of 1600 feet centered on the launch point.

(3) An applicant shall define an impact dispersion area for each stage of the suborbital launch vehicle chosen in subparagraph (b)(1) as provided below:

(i) An applicant shall calculate the impact range for the final launch vehicle stage (D_n). An applicant shall set D_n equal to the last

stage apogee altitude (H_n) multiplied by an impact range factor [$IP(H_n)$] as shown below:

$$D_n = H_n \cdot IP(H_n) \qquad \text{(Equation D1)}$$

Where:

$IP(H_n)$=0.4 for an apogee less than 100 km, and

$IP(H_n)$=0.7 for an apogee 100 km or greater.

(ii) An applicant shall calculate the impact range for each intermediate stage (D_i), where $i \varepsilon \{1, 2, 3, \ldots (n-1)\}$, and where n is the total number of launch vehicle stages. Using the apogee altitude (H_i) of each intermediate stage, an applicant shall used equation D1 to compute the impact range of each stage by substituting H_i for H_n. An applicant shall use the impact range factors provided in equation D1.

(iii) An applicant shall calculate the impact dispersion radius for the final launch vehicle stage (R_n). An applicant shall set R_n equal to the last stage apogee altitude (H_n) multiplied by an impact dispersion factor [$DISP(H_n)$] as shown below:

$$R_n = H_n \cdot DISP(H_n) \qquad \text{(Equation D2)}$$

Where:

$DISP(H_n)$=0.4 for an apogee less than 100 km, and

$DISP(H_n)$=0.7 for an apogee 100 km or greater

(iv) An applicant shall calculate the impact range for each intermediate stage (R_i), where $i \varepsilon \{1,2,3, \ldots (n-1)\}$. and where n is the total number of launch vehicle stages. Using the apogee altitude (H_i) of each intermediate stage, an applicant shall used equation D2 to compute impact dispression radius of each stage by substituting H_i for H_n. An applicant shall use the dispersion factors provided in equation D2.

(4) An applicant shall display an oversflight exclusion zone, each intermediate and final stage impact point (D_i through D_n), and each impact dispersion area for the intermediate and final launch vehicle stages on maps in accordance with paragraph (b)(2).

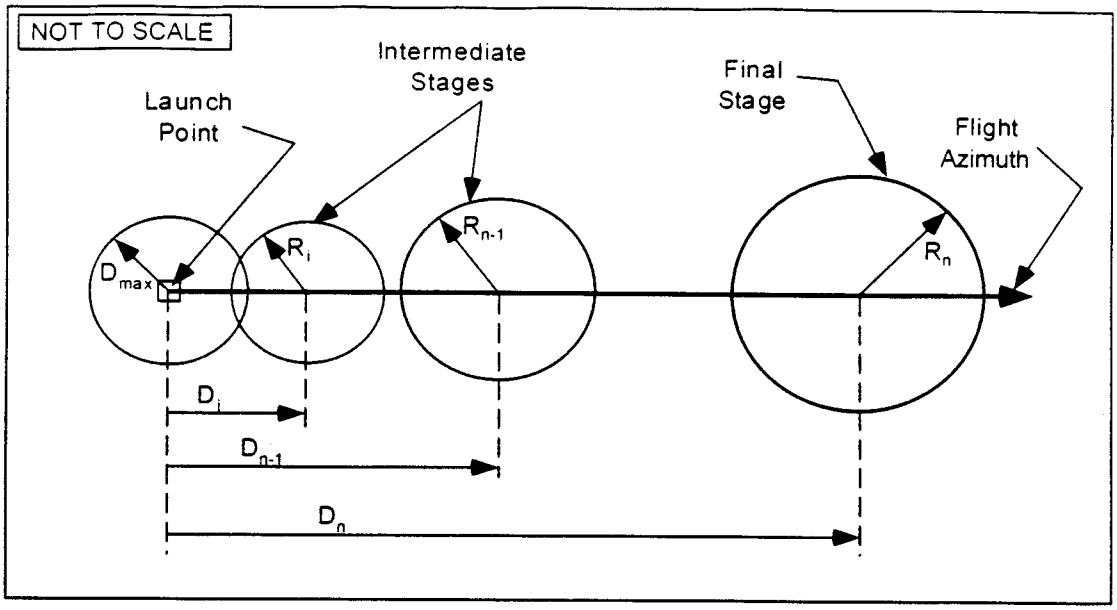

Figure D-1
Unguided Suborbital Launch Vehicle Overflight Exclusion Zone and Impact Dispersion Areas

(d) Evaluate the Overflight Exclusion Zone and Impact Dispersion Areas

(1) An applicant shall evaluate the overflight exclusion zone and each impact dispersion area for the presence of any populated areas. If an applicant determines that no populated area is located within the overflight exclusion zone or any impact dispersion area, then no additional steps are necessary.

(2) If a populated area is located in an overflight exclusion zone, an applicant may modify its proposal or demonstrate that there are times when no people are present or that the applicant has an agreement in place to evacuate the public from the overflight exclusion zone during a launch.

(3) If a populated area is located within any impact dispersion area, an applicant may modify its proposal and defined a new exclusion zone and new impact dispersion areas, or perform an impact risk analysis as provided in paragraph (e).

(e) Impact Risk Analysis

(1) An applicant shall estimate the expected average number of casualties, E_C, within the impact dispersion areas according to the following method:

(i) An applicant shall calculate the E_c by summing the impact risk for the impact dispersion areas of the final launch vehicle stage and all intermediate stages. An applicant shall estimate E_c for the impact dispersion area of each stage by using equation D3 through D7 for each of the populated areas located within the impact dispersion areas.

(ii) An applicant shall estimate the probability of impacting inside the X and Y sectors of each populated area within each impact dispersion area using equations D3 and D4 below:

$$P_x = \frac{\left(\frac{x_2 - x_1}{\sigma_x}\right)}{6\sqrt{2\pi}} \cdot \left(\exp\left(\frac{-\left(\frac{x_1}{\sigma_x}\right)^2}{2} \right) + 4 \cdot \exp\left[\frac{-\left(\frac{x_1 + x_2}{2\sigma_x}\right)^2}{2} \right] + \exp\left(\frac{-\left(\frac{x_2}{\sigma_x}\right)^2}{2} \right) \right) \quad \text{(Equation D3)}$$

Where:

x_1, x_2=closest and farthest downrange distance to populated area (see figure D–2)

σ_x=one-fifth of the impact dispersion radius (see figure D–2)

exp=exponential function (e^x)

$$P_y = \frac{\left(\frac{|y_2|}{\sigma_y} - \frac{|y_1|}{\sigma_\gamma}\right)}{6\sqrt{2\pi}} \cdot \left(\exp\left(\frac{-\left(\gamma_1/\sigma_\gamma\right)^2}{2} \right) + 4 \cdot \exp\left[\frac{\left(\frac{y_1 + y_2}{2\sigma_y}\right)^2}{2} \right] + \exp\left(\frac{-\left(\gamma_2/\sigma_\gamma\right)^2}{2} \right) \right) \quad \text{(Equation D4)}$$

Where:

y_1, y_2=closest and farthest cross range distance to the populated area (see figure D–2)

σ_y=one-fifth of the impact dispersion radius (see figure D–2)

exp=exponential function (e^x)

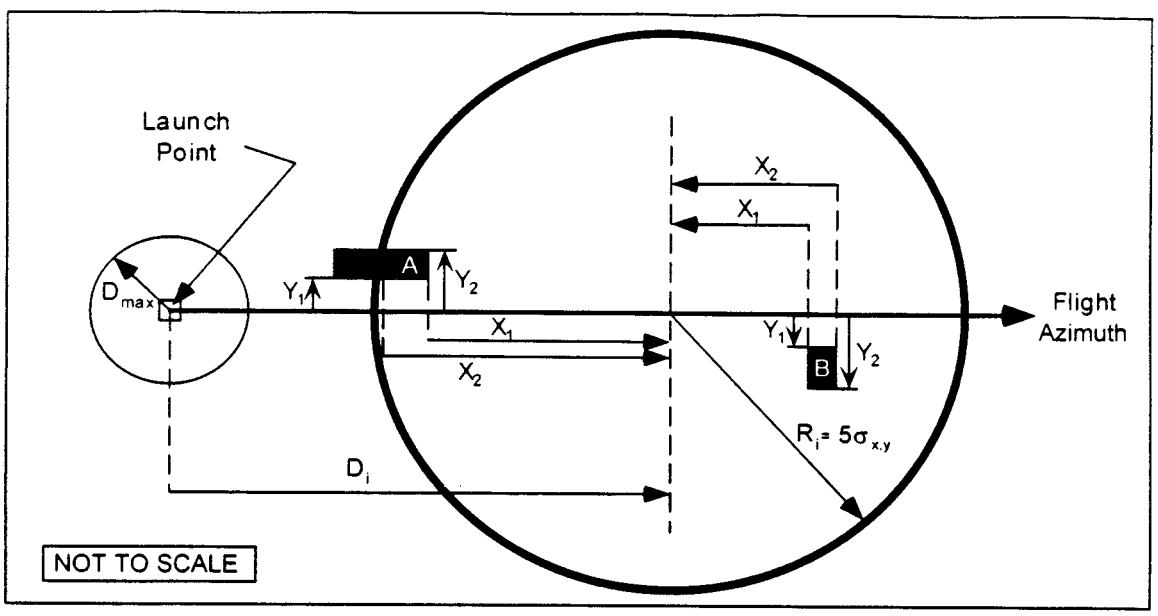

Figure D-2
Intermediate and Final Stage Impact Risk Analysis

(iii) If a populated area intersects the impact dispersion area boundary so that the x_2 or y_2 distance would otherwise extend outside the impact dispersion area, the x_2 or y_2 distance should be set equal to the impact dispersion area radius. The x_2 distance for populated area A in figure D–2 is an example.

(iv) If a populated area intersects the flight azimuth, an applicant shall solve equation D4 by obtaining the solution in two parts. An applicant shall determine, first, the probability between y_1=0 and y_2=a and, second, the probability between y_1=0 and y_2=b, as depicted in figure D–3. The probability P_y is then equal to the sum of the probabilities of the two parts. If a populated area intersects the line that is normal to the flight azimuth on the impact point, an applicant shall solve equation D3 by obtaining the solution in two parts in the same manner as with the values of x.

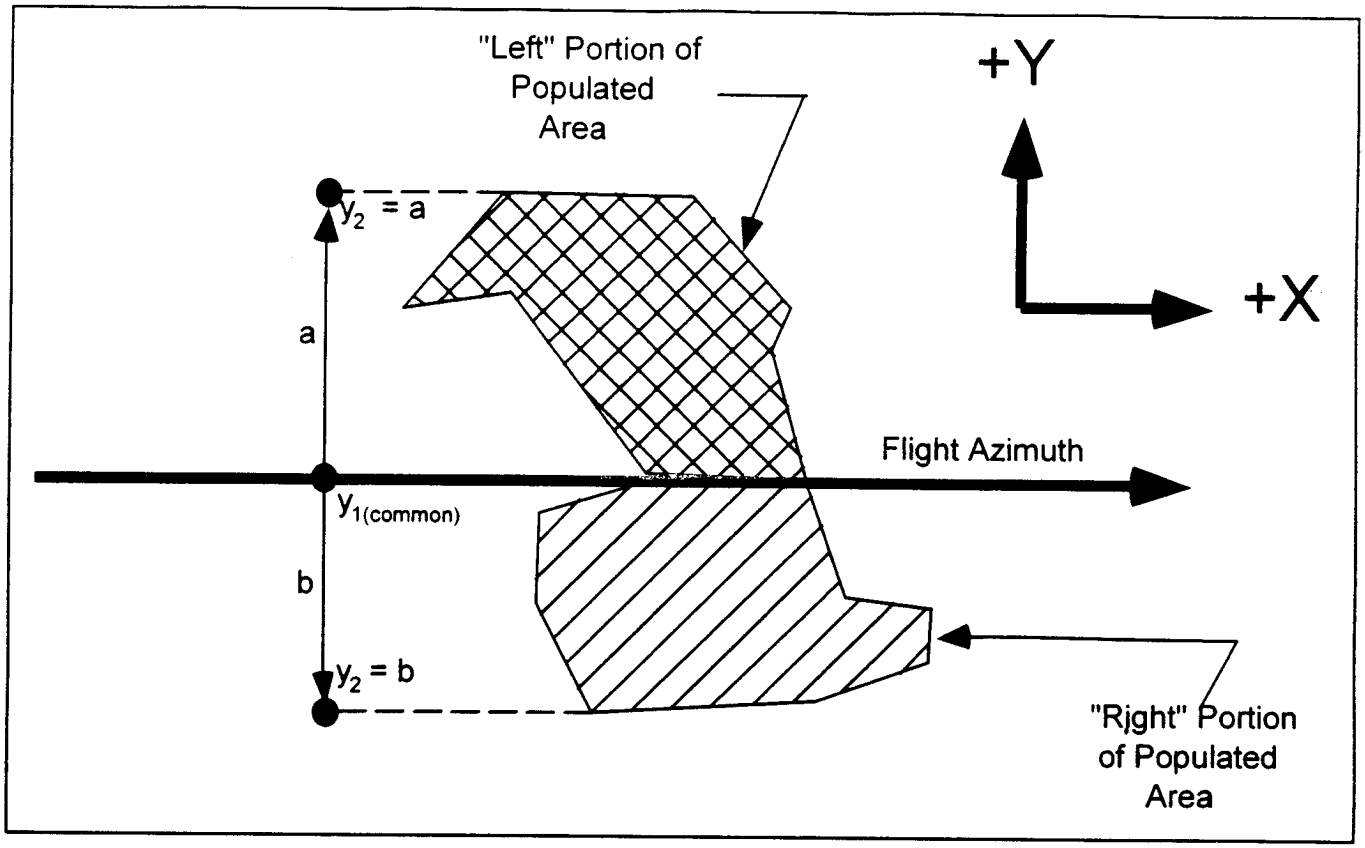

Figure D-3
Flight Azimuth Intersecting a Populated Area

(v) An applicant shall calculate the probability of impact (P_i) for each populated area using the following equation;

$$P_i = P_s \cdot P_x \cdot P_y \qquad \text{(Equation D5)}$$

Where:

P_s=probability of success=0.98

(vi) An applicant shall calculate the casualty expectancy for each populated area. E_{ck} is the casualty expectancy for a given populated area as shown in equation D6, where individual populated areas are designated with the subscript ''k''.

$$E_{ck} = P_i \cdot \left(\frac{A_c}{A_k}\right) \cdot N_k \qquad \text{(Equation D6)}$$

Where $\kappa \varepsilon \{1, 2, 3, \ldots n\}$
A_c=casualty area (from table D–1)
A_k=populated area
N_k=population in A_k

TABLE D–1.—EFFECTIVE CASUALTY AREA (A_c) VS. IMPACT RANGE

Impact range (nm)	Effective casualty area (miles^2)
0–4	9×10^{-3}

TABLE D–1.—EFFECTIVE CASUALTY AREA (A_c) VS. IMPACT RANGE—Continued

Impact range (nm)	Effective casualty area (miles^2)
5–49	9×10^{-3}
50–1,749	1.1×10^{-3}
1,750–4,999	3.6×10^{-6}
5,000–more	3.6×10^{-6}

(vii) An applicant shall estimate the total risk using the following summation of risk, including a multiplier of five, as shown in equation D7.

$$Ec(\text{Corridor}) = 5 \cdot \left(\sum_{k=1}^{n} E_{c_k}\right) \qquad \text{(Equation D7)}$$

(viii) Alternative Casualty Expectancy (E_C) Analysis. An applicant may employ specified variations to the analysis defined in subparagraphs (d)(1)(i)–(vii). Those variations are identified in subparagraphs (viii)(A) through (F) of this paragraph. Subparagraphs (A) through (D) permit an applicant to make conservative assumptions that would lead to an overestimation of E_c compared with the analysis defined in subparagraphs (d)(1)(i)–(vii). In subparagraphs (E) and (F), an applicant that would otherwise fail the analysis prescribed by subparagraphs (d)(1)(i)–(vii) may avoid (d)(1)(i)–(vii)'s overestimation of the probability of impact on each populated area. An applicant employing a variation shall identify the variation used, show an discuss

the specific assumptions made to modify the analysis defined in subparagraphs (d)(1)(i)–(vii), and justify how each assumption leads to overestimation of the corridor E_c compared with the analysis defined in subparagraphs (d)(1)(i)–(vii).

(A) Assume that P_x and P_y have a valve of 1.0 for all populated areas.

(B) Combine populated areas into one or more larger populated areas, and use a population density for the combined area or areas equal to the most dense populated area.

(C) For any given populated area, assume P_x has a value of one.

(D) For any given populated area, assume P_y has a value of one.

(E) For a given populated area, divide the populated area into small rectangles, determine P_i for each individual rectangle, and sum the individual impact probabilities to determine P_i for the entire populated area.

(F) For a given populated area, use the ratio of the populated area to the area of the P_i rectangle from the subparagraph (d)(1)(i)–(vii) analysis.

(2) If the estimated expected casualty does not exceed 30×10^{-6}, then no additional steps are necessary.

(3) If the estimated expected casualty exceeds 30×10^{-6}, then an applicant may modify its proposal and then repeat the impact risk analysis per this appendix D. If no set of impact dispersion areas exist which satisfy the FAA's risk threshold, the applicant's proposed launch site will fail the launch site location review.

Appendix E to Part 420.—Tables for Explosive Site Plan

TABLE E–1 QUANTITY DISTANCE REQUIREMENTS FOR DIVISION 1.3 SOLID PROPELLANTS

Quantity (lbs.) (over)	Qhantity (lbs.) (not over)	Public area distance (ft.)	Intraline distance (ft.)
0	1,000	75	50
1,000	5,000	115	75
5,000	10,000	150	100
10,000	20,000	190	125
20,000	30,000	215	145
30,000	40,000	235	155
40,000	50,000	250	165
50,000	60,000	260	175
60,000	70,000	270	185
70,000	80,000	280	190
80,000	90,000	195	195
90,000	100,000	300	200
100,000	200,000	375	250
200,000	300,000	450	300
300,000	400,000	525	350
400,000	500,000	600	400
500,000	1,000,000	800	500

TABLE E–2: LIQUID PROPELLANT EXPLOSIVE EQUIVALENTS

Propelland combinations	Explosive equivalent
LO_2/LH_2	The larger of: $8W^{2/3}$ where W is the weight of LO2/LH2, or 14% of W.
$LO_2/LH_2+LO_2/RP–1$	Sum of (20% for $LO_2/RP–1$)+the larger of: $8W^{2/3}$ where W is the weight of LO2/LH2, or 14% of W.
$LO_2/RP–1$	20% of W up to 500,000 pounds plus 10% of W over 500,000 pounds, where W is the weight of LO2/RP–1.
$N_2O_4N_2H_4$ (or UDMH OR UDMH/N_2H_4 Mixture)	10% of W, where W is the weight of the propellant.

TABLE E–3: PROPELLANT HAZARD AND COMPATIBILITY GROUPINGS AND FACTORS TO BE USED WHEN CONVERTING GALLONS OF PROPELLANT INTO POUNDS

Propellant	Hazard group	Compatibility group	Pounds/gallon	At temperature °F
Hydrogen Perioxide	II	A	11.6	68
Hydrazine	III	C	8.4	68
Liquid Hydrogen	III	C	0.59	–423
Liquid Oxygen	II	A	9.5	–297
Nitrogen Tetroxide	I	A	12.1	68
RP-1	I	C	6.8	68
UDMH	III	C	6.6	68
UDHM/Hydrazine	III	C	7.5	68

TABLE E–4:—HAZARD GROUP I

Pounds of propellant		Public area and incompatible	Intragroup and compatible
Over	Not over	Distance in feet	Distance in feet
Column 1	Column 2	Column 3	Column 4
0	100	30	25
100	200	35	30
200	300	40	35
300	400	45	35

TABLE E–4.—HAZARD GROUP I—Continued

Pounds of propellant		Public area and incompatible	Intragroup and compatible
Over	Not over	Distance in feet	Distance in feet
Column 1	Column 2	Column 3	Column 4
400	500	50	40
500	600	50	40
600	700	55	40
700	800	55	45
800	900	60	45
900	1,000	60	45
1,000	2,000	65	50
2,000	3,000	70	55
3,000	4,000	75	55
4,000	5,000	80	60
5,000	6,000	80	60
6,000	7,000	85	65
7,000	8,000	85	65
8,000	9,000	90	70
9,000	10,000	90	70
10,000	15,000	95	75
15,000	20,000	100	80
20,000	25,000	105	80
25,000	30,000	110	85
30,000	35,000	110	85
35,000	40,000	115	85
40,000	45,000	120	90
45,000	50,000	120	90
50,000	60,000	125	95
60,000	70,000	130	95
70,000	80,000	130	100
80,000	90,000	135	100
90,000	100,000	135	105
100,000	125,000	140	110
125,000	150,000	145	110
150,000	175,000	150	115
175,000	200,000	155	115
200,000	250,000	160	120
250,000	300,000	165	125
300,000	350,000	170	130
350,000	400,000	175	130
400,000	450,000	180	135
450,000	500,000	180	135
500,000	600,000	185	140
600,000	700,000	190	145
700,000	800,000	195	150
800,000	900,000	200	150
900,000	1,000,000	205	155
1,000,000	2,000,000	235	175
2,000,000	3,000,000	255	190
3,000,000	4,000,000	265	200
4,000,000	5,000,000	275	210
5,000,000	6,000,000	285	215
6,000,000	7,000,000	295	220
7,000,000	8,000,000	300	225
8,000,000	9,000,000	305	230
9,000,000	10,000,000	310	235

TABLE E–5: HAZARD GROUP II

Pounds of propellant		Public area and incompatible	Intragroup and compatible
Over	Not over	Distance in feet	Distance in feet
Column 1	Column 2	Column 3	Column 4
0	100	60	30
100	200	75	35
200	300	85	40
300	400	90	45
400	500	100	50
500	600	100	50
600	700	105	55

TABLE E–5: HAZARD GROUP II—Continued

Pounds of propellant		Public area and incompatible	Intragroup and compatible
Over	Not over	Distance in feet	Distance in feet
Column 1	Column 2	Column 3	Column 4
700	800	110	55
800	900	115	60
900	1,000	120	60
1,000	2,000	130	65
2,000	3,000	145	70
3,000	4,000	150	75
4,000	5,000	160	80
5,000	6,000	165	80
6,000	7,000	170	85
7,000	8,000	175	85
8,000	9,000	175	90
9,000	10,000	180	90
10,000	15,000	195	95
15,000	20,000	205	100
20,000	25,000	215	105
25,000	30,000	220	110
30,000	35,000	225	110
35,000	40,000	230	115
40,000	45,000	235	120
45,000	50,000	240	120
50,000	60,000	250	125
60,000	70,000	255	130
70,000	80,000	260	130
80,000	90,000	265	135
90,000	100,000	270	135
100,000	125,000	285	140
125,000	150,000	295	145
150,000	175,000	305	150
175,000	200,000	310	155
200,000	250,000	320	160
250,000	300,000	330	165
300,000	350,000	340	170
350,000	400,000	350	175
400,000	450,000	355	180
450,000	500,000	360	180
500,000	600,000	375	185
600,000	700,000	385	190
700,000	800,000	395	195
800,000	900,000	405	200
900,000	1,000,000	410	205
1,000,000	2,000,000	470	235
2,000,000	3,000,000	505	255
3,000,000	4,000,000	535	265
4,000,000	5,000,000	555	275
5,000,000	6,000,000	570	285
6,000,000	7,000,000	585	295
7,000,000	8,000,000	600	300
8,000,000	9,000,000	610	305
9,000,000	10,000,000	620	310

TABLE E–6:—HAZARD GROUP III

Pounds of propellant		Public area and incompatible	Intragroup and compatible
Over	Not over	Distance in feet	Distance in feet
Column 1	Column 2	Column 3	Column 4
0	100	600	30
100	200	600	35
200	300	600	40
300	400	600	45
400	500	600	50
500	600	600	50
600	700	600	55
700	800	600	55
800	900	600	60
900	1,000	600	60

TABLE E–6:—HAZARD GROUP III—Continued

Pounds of propellant		Public area and incompatible	Intragroup and compatible
Over	Not over	Distance in feet	Distance in feet
Column 1	Column 2	Column 3	Column 4
1,000	2,000	600	65
2,000	3,000	600	70
3,000	4,000	600	75
4,000	5,000	600	80
5,000	6,000	600	80
6,000	7,000	600	85
7,000	8,000	600	85
8,000	9,000	600	90
9,000	10,000	600	90
10,000	15,000	1,200	95
15,000	20,000	1,200	100
20,000	25,000	1,200	105
25,000	30,000	1,200	110
30,000	35,000	1,200	110
35,000	40,000	1,200	115
40,000	45,000	1,200	120
45,000	50,000	1,200	120
50,000	60,000	1,200	125
60,000	70,000	1,200	130
70,000	80,000	1,200	130
80,000	90,000	1,200	135
90,000	100,000	1,200	135
100,000	125,000	1,800	140
125,000	150,000	1,800	145
150,000	175,000	1,800	150
175,000	200,000	1,800	155
200,000	250,000	1,800	160
250,000	300,000	1,800	165
300,000	350,000	1,800	170
350,000	400,000	1,800	175
400,000	450,000	1,800	180
450,000	500,000	1,800	180
500,000	600,000	1,800	185
600,000	700,000	1,800	190
700,000	800,000	1,800	195
800,000	900,000	1,800	200
900,000	1,000,000	1,800	205
1,000,000	2,000,000	1,800	235
2,000,000	3,000,000	1,800	255
3,000,000	4,000,000	1,800	265
4,000,000	5,000,000	1,800	275
5,000,000	6,000,000	1,800	285
6,000,000	7,000,000	1,800	295
7,000,000	8,000,000	1,800	300
8,000,000	9,000,000	1,800	300
9,000,000	10,000,000	1,800	310

TABLE E–7:—DISTANCES WHEN EXPLOSIVE EQUIVALENTS APPLY

TNT equivalent weight of propellants	Distance in feet	
	To public area	Intraline
Column 1	Column 2	Column 3
Not Over:		Unbarricaded
100	1,250	80
200	1,250	100
300	1,250	120
400	1,250	130
500	1,250	140
600	1,250	150
700	1,250	160
800	1,250	170
900	1,250	180
1,000	1,250	190
1,500	1,250	210
2,000	1,250	230

TABLE E–7.—DISTANCES WHEN EXPLOSIVE EQUIVALENTS APPLY—Continued

TNT equivalent weight of propellants	Distance in feet	
	To public area	Intraline
Column 1	Column 2	Column 3
3,000	1,250	260
4,000	1,250	280
5,000	1,250	300
6,000	1,250	320
7,000	1,250	340
8,000	1,250	360
9,000	1,250	380
10,000	1,250	400
15,000	1,250	450
20,000	1,250	490
25,000	1,250	530
30,000	1,250	560
35,000	1,310	590
40,000	1,370	620
45,000	1,425	640
50,000	1,475	660
55,000	1,520	680
60,000	1,565	700
65,000	1,610	720
70,000	1,650	740
75,000	1,685	770
80,000	1,725	780
85,000	1,760	790
90,000	1,795	800
95,000	1,825	820
100,000	1,855	830
125,000	2,115	900
150,000	2,350	950
175,000	2,565	1,000
200,000	2,770	1,050

[FR Doc. 99–15384 Filed 6–24–99; 8:45 am]
BILLING CODE 4910–13–M

federal register

Friday
June 25, 1999

Part III

Department of Energy

Western Area Power Administration

Application of the Energy Planning and Management Program Power Marketing Initiative to the Salt Lake Area Integrated Projects; Notice

2004 Power Market Plan; Notice

Power Allocation Issues; Notice

DEPARTMENT OF ENERGY

Western Area Power Administration

Application of the Energy Planning and Management Program Power Marketing Initiative to the Salt Lake City Area Integrated Projects

AGENCY: Western Area Power Administration, DOE.

ACTION: Notice of decision.

SUMMARY: The Western Area Power Administration (Western) is applying the Energy Planning and Management Program (EPAMP) Power Marketing Initiative (PMI) to the Salt Lake City Area Integrated Projects (SLCA/IP), as modified and discussed herein. For most of the current customers, Western will extend 93 percent of the customer's pro rata share of the SLCA/IP power resource available on October 1, 2004. Effective on that same date, Western will make allocations of SLCA/IP power to eligible new customers. Application procedures for new customers will be set forth in a separate **Federal Register** notice in the near future.

FOR FURTHER INFORMATION CONTACT: Mr. Dave Sabo, CRSP Manager, Western Area Power Administration, PO Box 11606, Salt Lake City, UT 84147–0606, telephone (801) 524–6372, email sabo@wapa.gov.

DATES: Western's decision to apply the PMI, as modified herein, to the SLCA/IP will become effective on July 26, 1999.

SUPPLEMENTARY INFORMATION:

Authorities

This decision about the future marketing of the SLCA/IP power resources was made pursuant to the Department of Energy (DOE) Organization Act (42 U.S.C. 7101–7352); and the Reclamation Act of 1902 (ch. 1093, 32 Stat. 388), as amended and supplemented by subsequent enactments, particularly section 9(c) of the Reclamation Project Act of 1939 (43 U.S.C. 485h(c)); and other acts specifically applicable to the projects involved.

Background

Western published its proposal to apply the EPAMP PMI to the SLCA/IP on February 26, 1997 (62 FR 8709–8710). Western proposed to extend 96 percent of the SLCA/IP firm Federal resources available on October 1, 2004, to its current firm-power customers for 20 years. The remaining 4 percent of resources was proposed to be made available for new customers. Further resource reductions of 1-percent each were proposed to be made available to new customers on October 1, 2009, and October 1, 2014.

In its February 26, 1997, notice, Western requested comments on its proposal. Interested parties were given until May 27, 1997, to comment in writing. In addition, public information and comment meetings were held in Sandy, Utah; Golden, Colorado; Albuquerque, New Mexico; and Phoenix, Arizona. Comments were received from firm-power customers, Native American tribes, environmental organizations, and members of Congress.

In a separate public process that started on December 1, 1998, at 63 FR 66166, Western published a Notice of Inquiry to explore the impact of electric utility industry restructuring on Western's power allocation policies. A forum was held in Denver, Colorado, on January 6, 1999, to receive public comment on this matter, and written comments were accepted from the public until the end of a 45-day consultation and comment period. The comments received during this process are being addressed in a separate **Federal Register** notice published concurrently with this notice.

Several of the comments Western received on the Notice of Inquiry concerned the size of the proposed new customer power pool, particularly the adequacy of the pool to meet the needs of Native American tribes. Consequently, on January 29, 1999, at 64 FR 4646, Western published a notice of an additional opportunity to comment on the appropriate size of the new customer power pool and to consider the needs of eligible Native American tribes. Western accepted comments on this topic until March 1, 1999. Informational meetings were held on the SLCA/IP resources in Phoenix, Arizona, and Albuquerque, New Mexico, to better explain to potential new customers the opportunities available to them under the proposal. Several comments were received from Native American tribes, Native American organizations, and current Western customers.

Availability of Information

All documents made or kept by Western for the purpose of developing this decision are available for public review, inspection, and copying at the CRSP Customer Service Center, at 257 East 200 South, Suite 475, Salt Lake City, Utah.

Regulatory Flexibility Analysis

The Regulatory Flexibility Act of 1980 (5 U.S.C. 601, *et seq.*) requires Federal agencies to perform a regulatory flexibility analysis if a rule is likely to have a significant economic impact on a substantial number of small entities and there is a legal requirement to issue a general notice of proposed rulemaking. Western has determined that this action does not require a regulatory flexibility analysis since it is a rulemaking of particular applicability involving rates or services applicable to public property.

Determination Under Executive Order 12866

Western has an exemption from centralized regulatory review under Executive Order 12866; accordingly, no clearance of this notice by the Office of Management and Budget is required.

Environmental Compliance

In compliance with the National Environmental Policy Act of 1969 (NEPA) (42 U.S.C. 4321, *et seq.*); Council on Environmental Quality Regulations (40 CFR parts 1500–1508); and DOE NEPA Regulations (10 CFR part 1021), considerable environmental documentation has been prepared addressing EPAMP, and the marketing of SLCA/IP power. Western completed an environmental impact statement (EIS) on EPAMP. The Record of Decision was published in the **Federal Register** (60 FR 53181, October 12, 1995). Western also completed the SLCA/IP Electric Power Marketing EIS, and the Record of Decision was published in the **Federal Register** (61 FR 56534, November 1, 1996). In the Marketing EIS, Western stated that when EPAMP was applied to the SLCA/IP that if further environmental review was required it would be completed at that time. Since then, Western has determined that this action is categorically excluded from preparation of an additional environmental assessment or EIS. Accordingly, no further environmental review will be conducted.

Major Comments and Western's Responses

Western has considered the comments presented by all parties on the proposal. The major comments received and Western's responses to those comments are summarized below.

1. The Extension of Existing Commitments to Current Customers

Existing firm-power customers and Native American tribes were generally supportive of Western's proposal. Many customers pointed out that EPAMP had two components: a requirement that Western's firm-power customers must

prepare integrated resource plans (IRP), and that Western extend a major percentage of the existing Federal resources to Western's existing firm-power customers through the PMI, with the exact amount to be determined on a project-specific basis. The customers stated they have complied with the IRP requirement and believe that Western is now obliged to extend resource commitments. The customers further argued that in order to prepare meaningful IRPs, they reasonably had to assume that a stable Federal resource would continue to be available to them since an uncertain Federal resource would make it very difficult to determine future resource needs.

Several customers also suggested that Federal power has become more expensive in recent years; and, if the trend continued, Federal power would soon become a noncompetitive resource. They commented that revenues from the sale of power also repay up to 90 percent of the Federal Government's investment in the irrigation features of the SLCA/IP water development projects. These customers argued that Western should offer contract extensions while customers are willing to enter into longer term arrangements, thus assuring the Federal Government of a stable revenue stream to repay its investment in power and irrigation facilities. Further argument was made that the electric industry is undergoing many changes and that an extension of resources would help stabilize volatile resource markets.

Other arguments were made that this is not an appropriate time to extend resource commitments. According to these other commentors, changes in the electrical industry create uncertainties about who should be Western's future customers and that Western should wait until it has better knowledge of the marketplace. Concern was also expressed that the extension would impede the progress of legislation to privatize power marketing administration assets.

Western's Response

After consideration of the comments received and in light of the broad discretion Congress has provided Western to implement policy changes when warranted, Western has decided to modify its proposal. For most of the current customers, Western will extend 93 percent of the customer's pro rata share of the SLCA/IP power resource available on October 1, 2004. No further reductions will be made in subsequent years to meet the needs of new customers. Western will amend current contracts to extend the term for 20 years effective October 1, 2004.

Western has decided it is appropriate to proceed now with application of the PMI to the SLCA/IP. Western's determination about whether to apply the PMI to the SLCA/IP was delayed until the EIS on the Post 1989 SLCA/IP Power Marketing Plan was completed and the associated marketing criteria were finalized and implemented. That EIS was completed in October 1996, and the associated post-1989 marketing criteria were finalized and implemented April 1, 1997. Customers have already completed IRPs in compliance with the requirements of EPAMP and should be able to rely on Western's resources. Western also believes that it is in the best interest of the United States to help ensure that the Federal Government's investment in the Federal power projects be repaid. All of the investment in power facilities, as well as up to 90 percent of the irrigation investment and substantial new environmental expenses, is being repaid by revenues received from the sale of electricity. Extending resource commitments provides relative assurance to the United States of a continued revenue stream to repay these expenses and obligations.

Western also believes that although the electric industry is undergoing many changes, it is important to extend resource commitments now. These changes are affecting not only the competitiveness of Western's customers, but also the diversity of energy providers in the marketplace. Western must be able to operate in the new utility environment in order to fulfill its mission of marketing Federal power. Western's mission under current statutes is ongoing.

For many of Western's customers, Federal power is an essential component of their resource mix, and a resource extension is critical to planning strategies for dealing with the utility restructuring. Western recognizes the need for flexibility to respond to the changing utility industry and to changing dam operations. Recently, Western and its SLCA/IP customers entered into an amendment to power sales contracts which provides great flexibility for dealing with changing hydropower situations.

Western recognizes that the Bureau of Reclamation is under a continuing obligation to ensure that the operation of the hydroelectric facilities comply with Federal environmental laws. Western may revise the amount of power marketed by the SLCA/IP as required to respond to changes in hydrology and river operations, upon 5 years' notice to customers. Any such changes will be applied on a pro rata basis among all customers.

2. Allocations to Native American Tribes

Native American tribes commented that they should be entitled to an allocation of Federal power to help compensate them for the impacts to their lands and lifestyles caused by the construction of the Federal dams and power facilities. The tribes argued that the proposed power pool of 4 percent of the SLCA/IP marketable resources was inadequate to meet their current or future needs. Several comments were received that the pool should be increased to 10–30 percent and if the tribes did not use the total amount it could be returned to the current customers after the reallocation process. The tribes were also concerned that the 30-day comment period was not adequate for them to determine their loads and to make a reasonable recommendation of pool size.

Some commentors suggested that Western should provide enough power to supply 100 percent of tribal loads as well as meet future needs. Others commented that it is not appropriate or even possible for Western to do this.

Western's current customers commented that the proposed power pool was adequate to give tribes and other new customers a fair share of the resource. They suggested that Western consider advancing the 2009 and 2014 resource pools to enhance the initial pool in 2004, with no further changes in allocations for the term of the contracts, to allow Native American tribes to make appropriate resource decisions. Both tribes and customers commented that Western should work out arrangements for tribes to receive the benefits of Federal power through bill crediting or other beneficial arrangements.

A comment was also made that Western should commission a study to determine tribal loads within the SLCA/IP marketing area.

Western's Response

Effective October 1, 2004, Western will make allocations of SLCA/IP power to eligible new customers which apply for SLCA/IP power. The source of electricity for allocations to the new customers will be a resource pool of SLCA/IP power not extended to existing customers and available beginning October 1, 2004. Western has determined that a resource pool size of 7 percent of resources available on October 1, 2004, combined with an additional reduction to Tri-State Generation and Transmission

Association's (Tri-State) SLCA/IP resource commitment, will enable Western to supply up to 12.5 percent of the current load of new utility applicants and 65 percent of the load of Native American entities that apply.

Western believes that it would be in the best interests of both current customers and potential customers including Native Americans to establish one resource pool of a definite size at this time. Western performed a study of tribal loads within the SLCA/IP marketing area. Western received information on loads from tribes and serving utilities for many potential customers. Others were estimated using data about the size of the tribe and use of electricity in the local area. Western determined that a power pool that would provide Native American tribes enough power to serve 65 percent of their current loads would be equitable to the tribes and to current customers. Serving tribal load at this level would be consistent with DOE policy and the trust responsibility that exists between Native Americans and the Federal Government. Western's study indicates that a resource pool of the size described in this **Federal Register** notice would be sufficient to meet a fair share of Native American loads as well as those of other potential new customers.

In an exemption to the general policy, the four existing firm-power customers of the SLCA/IP that are Native American entities—the Navajo Tribal Utility Authority, the Ak Chin Indian Community, the Bureau of Indian Affairs' Colorado River Agency, and the San Carlos Irrigation Project—will be extended 100 percent of their pro rata share of the SLCA/IP resource available on October 1, 2004. In addition, Western will, if necessary, allocate additional SLCA/IP resources from a resource pool to these or other Native American organizations such that a minimum of 65 percent of the current load of each is served by Federal power resources.

For Native American tribes which currently receive power from utilities that have allocations of Federal power, Western will take into account the benefit received through the existing supplier when determining the power allocation to the tribe.

During the process of allocating the resource pool to customers, which will begin after conclusion of this process, further information on actual loads will be collected and used to determine the final allocations from the resource pool. Western, to the extent it is able, will provide technical assistance to tribes requesting assistance in preparation of their applications and load data. After applications are received and power allocated, unallocated power remaining in the pool may be returned to current customers. If a tribe receives an allocation but is unable to accept power on October 1, 2004, the power allocated to the tribe will be provided to existing customers until such time as the tribe is able to use the power.

Western has also decided that the interest shown by tribes and other potential new customers indicates that the resource pool should be used to serve these loads rather than, as proposed in February 1997, for encouragement of new technologies, conservation, or renewable resources, or held in reserve by Western for contingencies. Other eligibility criteria for allocations of SLCA/IP resources will be addressed in subsequent **Federal Register** notices and mailings to interested parties about the availability of SLCA/IP resources to new customers. Western will initiate a separate public process soon to accept applications from Native American tribes and potential new customers for firm electric service of SLCA/IP power from October 1, 2004, through September 30, 2024.

Finally, Western has agreed to work out arrangements for tribes to receive the benefits of Federal power through bill crediting or other beneficial arrangements.

3. Other Comments

A comment was received that the prices charged by Western for its power sales are too low and that the price should be raised to finance development of alternative forms of energy. Although comments about the pricing of Western power are outside the scope of Western's proposal, Western has a long record of encouraging its customers to conserve energy and develop renewable resources without the need to introduce changes in how its rates are set. Additionally, Western prohibits its customers from profiteering by reselling their Federal power to entities other than their end users. Comments on Western's rates may be addressed when Western issues notices of proposed rate changes. Comments on actions Western might take to further encourage its customers to conserve energy and to develop renewable resources may be addressed later this year when Western begins a formal public process to reconsider its regulations concerning its customers' IRPs.

Another comment suggested that Western should provide an official public comment forum or official public record. Western has provided adequate opportunity for formal comment. Four information and comment forums were held in 1997, and an additional public comment forum was held in Denver, Colorado, on January 6, 1999. Interested parties also were encouraged during each of the three informational meetings, held in early February of 1999, to comment in writing. Letters submitted in response to the January 29, 1999, **Federal Register** notice on resource pool size are part of Western's formal and official record. Western has considered the comments presented by all parties on the proposed 2004 marketing plan. Western has also responded in detail to the comments received as a result of the Notice of Inquiry in a separate document published separately in the **Federal Register**. Those additional comments are incorporated herein by reference.

Several comment letters were received regarding the impact of a pending merger between Tri-State and Plains Electric Generation and Transmission Cooperative (Plains). One member of Plains, Navopache Electric Cooperative (Navopache), is choosing not to participate in the merger and cannot receive a portion of the SLCA/IP power allocated to Plains under the terms of the currently effective power sales contract between Western and Plains. Navopache has asked to receive an independent allocation of power in 2004 to remediate the ''overallocation'' to Tri-State.

In another exception to the general policy concerning the allocation to Tri-State, Western has decided to allocate to Tri-State 7 megawatts less than 93 percent of Tri-State's pro rata share of the SLCA/IP resource available on October 1, 2004. The 7 mega-watts will be part of the resource pool to be made available to new customers. This additional reduction to Tri-State's allocation is being taken in recognition of the fact that Tri-State would otherwise receive a post-2004 resource commitment based on all of the SLCA/IP power allocation of Plains, even though Navopache has chosen not to use Tri-State as its power supplier. Navopache is welcome to apply for power from the resource pool as a new customer.

In order to provide additional flexibility in addressing changing conditions, the new contracts will have language that gives the Administrator the discretion to adjust a customer's power allocation in the event the customer merges with another organizational entity, acquires or ''spins off'' another utility, joins or withdraws from a membership-based organization, or adds members from a membership organization.

Dated: June 10, 1999.

Michael S. Hacskaylo,

Administrator.

[FR Doc. 99–16017 Filed 6–24–99; 8:45 am]

BILLING CODE 6450–01–P

DEPARTMENT OF ENERGY

Western Area Power Administration

2004 Power Marketing Plan

AGENCY: Western Area Power Administration, DOE.

ACTION: Notice of the final 2004 Power Marketing Plan.

SUMMARY: Western Area Power Administration (Western), a Federal power marketing administration of DOE, announces its 2004 Power Marketing Plan (Marketing Plan) for the Sierra Nevada Customer Service Region (Sierra Nevada Region). On December 31, 2004, all of the Sierra Nevada Region's long-term firm Central Valley Project (CVP) power sales contracts will expire. This notice responds to the comments received on the Proposed 2004 Power Marketing Plan (Proposed Plan) and sets forth the final Marketing Plan. The Marketing Plan specifies the terms and conditions under which Western will market power from the CVP and the Washoe Project beginning January 1, 2005. This Marketing Plan supersedes all previous marketing plans for these projects.

Western plans to amend existing customers' power sales contracts to provide them with the right to purchase a percentage of the Sierra Nevada Region's power resources beginning January 1, 2005. After Western more fully develops products and services, it will offer new contracts for the sale of power under the Marketing Plan. Western will request entities who meet the criteria defined in the Marketing Plan, and who wish to apply for a new allocation of power from Western, to submit formal applications. Application procedures will be set forth in the Call for 2005 Resource Pool Applications in a separate **Federal Register** notice.

DATES: The Marketing Plan will become effective July 26, 1999.

FOR FURTHER INFORMATION CONTACT: Power Marketing Manager, Western Area Power Administration, Sierra Nevada Customer Service Region, 114 Parkshore Drive, Folsom, CA 95630, telephone (916) 353–4416.

SUPPLEMENTARY INFORMATION:

Authorities

The Marketing Plan for marketing power after 2004 by the Sierra Nevada Region is being established pursuant to the Department of Energy Organization Act (42 U.S.C. 7101–7352); the Reclamation Act of June 17, 1902 (ch. 1093, 32 Stat. 388) as amended and supplemented by subsequent enactments, particularly section 9(c) of the Reclamation Project Act of 1939 (43 U.S.C. 485(c)); and other acts specifically applicable to the projects involved.

Development of the 2004 Power Marketing Plan

Western began developing the Marketing Plan with a series of three informal public information meetings. These meetings helped Western identify pertinent issues and possible marketing options, including types of products and services, and eligibility and allocation criteria. During that process, Western evaluated several options for marketing power after existing contracts expire.

Western began the Administrative Procedure Act process with its Notice of Proposed Plan in the **Federal Register** (62 FR 8710, February 26, 1997). Western held a public information forum on April 8, 1997, to present the Proposed Plan and answer questions. On April 24, 1997, Western held a public comment forum to accept verbal comments on the Proposed Plan. In addition, Western accepted written comments from the public through May 27, 1997. Western considered the comments received in developing the Marketing Plan.

In a separate public process, Western explored the impact of electric utility industry restructuring on Western's power allocation policies. A Notice of Inquiry for this process was published in the **Federal Register** (63 FR 66166, December 1, 1998). Western held a public comment forum on January 6, 1999, and accepted written comments through January 15, 1999. The results of this process will be published in a separate **Federal Register** notice.

Western opened an additional comment period focused solely on the size of project-specific resource pools because several Native American tribes commented on the size of these pools. The Notice of Public Process on Resource Pool Size was published in the **Federal Register** (64 FR 4646, January 29, 1999). Western held informational meetings on its resource pool size proposals and the requirements for receiving an allocation of power in Phoenix, Arizona, on February 3, 1999; Albuquerque, New Mexico, on February 5, 1999; and Folsom, California, on February 9, 1999. Western accepted written comments from the public through March 1, 1999. Western also considered the comments related to the Sierra Nevada Region's resource pool received during this comment period in developing the Marketing Plan.

Western will market the Sierra Nevada Region's power resources consistent with the Power Marketing Initiative under the Energy Planning and Management Program (EPAMP) (60 FR 54151, October 20, 1995). Western will initially offer 96 percent of the Sierra Nevada Region's power resources to existing customers and allocate, under a separate process, the remaining resources using the criteria in the Marketing Plan. Under a separate process, Western will reduce all customers' allocation percentages by up to 2 percent and establish a 2015 Resource Pool. The Marketing Plan provides a balance between existing and new customers, including Native American tribes, while meeting Western's contractual obligations that continue beyond 2004. If unexpected circumstances cause early termination of existing electric service contracts, Western may market its power resources under the Marketing Plan before January 1, 2005.

Background

CVP power facilities include 11 powerplants with a maximum operating capability of about 2,044 megawatts (MW), and an estimated average annual generation of 4.6 million megawatthours (MWh). Western markets and transmits the power available from the CVP.

Western owns the 94 circuit-mile Malin-Round Mountain 500-kilovolt (kV) transmission line (an integral section of the Pacific Northwest-Pacific Southwest Intertie (Pacific Intertie)), 803 circuit miles of 230-kV transmission line, 7 circuit miles of 115-kV transmission line, and 44 circuit miles of 69-kV and below transmission line. Western also has part ownership in the 342-mile California-Oregon Transmission Project. Many of Western's existing customers have no direct access to Western's transmission lines and receive service over transmission lines owned by other utilities.

The Washoe Project, Stampede Powerplant, has a maximum operating capability of 3.65 MW with an estimated annual generation of 10,000 MWh. Sierra Pacific Power Company owns and operates the only transmission system available for access to Stampede Powerplant.

The following table lists estimates of CVP power resources and adjustments. This table is for informational purposes only, and does not imply that the power resources and adjustments shown will

be the actual amounts available or adjustments applied.

ESTIMATED CVP POWER RESOURCES AND ADJUSTMENTS

Power resources/adjustment	Range/value
Annual energy generation	2,400,000–8,600,000 MWh.
Monthly energy generation	100,000–1,100,000 MWh.
Monthly capacity	1,100–1,900 MW.
Annual project use	670,000–1,670,000 MWh.
Monthly project use	10,000–180,000 MWh.
Monthly project use (on peak)	30–230 MW.
Monthly maintenance	0–300 MW.
Reserves—hydro	Minimum 5% of monthly capacity
CVP transmission and transformation losses from the generator bus to a 230-kV load bus	1.8% (currently).

Legal Analysis

Regulatory Flexibility Analysis

The Regulatory Flexibility Act of 1980 (5 U.S.C. 601, *et seq.*), requires Federal agencies to perform a regulatory flexibility analysis if a final rule is likely to have a significant economic impact on a substantial number of small entities and there is a legal requirement to issue a general notice of proposed rulemaking. Western has determined that this action does not require a regulatory flexibility analysis since it is a rulemaking of particular applicability involving services applicable to public property.

Environmental Compliance

In compliance with National Environmental Policy Act (NEPA) (42 U.S.C. 4321, *et seq.*), Council on Environmental Quality NEPA implementing regulations (40 CFR parts 1500–1508), and DOE NEPA implementing regulations (10 CFR part 1021), Western completed an environmental impact statement (EIS) on EPAMP. The Record of Decision was published in the **Federal Register** (60 FR 53181, October 12, 1995). Western also completed the 2004 Power Marketing Program EIS (2004 EIS), and the Record of Decision was published in the **Federal Register** (62 FR 22934, April 28, 1997). The Marketing Plan falls within the range of alternatives considered in the 2004 EIS. This NEPA review identified and analyzed environmental effects related to the Marketing Plan.

Marketable CVP and Washoe Project electrical capacity and energy is influenced by available reservoir storage and water releases controlled by the U.S. Department of the Interior, Bureau of Reclamation (Reclamation). Pursuant to the CVP Improvement Act of 1992 (Pub. L. 102–575, Title 34) (CVPIA), Reclamation prepared a programmatic EIS (PEIS) addressing improvements to fish and wildlife habitat stipulated therein, and potential changes in CVP operations and water allocations to meet those obligations. Actions based on the PEIS may result in modifications to CVP facilities and operations that would affect the timing and quantity of electric power generated by the CVP. Such changes may, in turn, affect electric power products and services to be marketed by Western. The Marketing Plan is designed to accommodate these changes. Western is a cooperating agency in Reclamation's PEIS.

Review Under the Paperwork Reduction Act

In accordance with the Paperwork Reduction Act of 1980 (44 U.S.C. 3501, *et seq.*), Western has received approval from the Office of Management and Budget for the collection of customer information in this rule, under control number 1910–0100.

Determination Under Executive Order 12866

Western has an exemption from centralized regulatory review under Executive Order 12866; accordingly, no clearance of this notice by the Office of Management and Budget is required.

Small Business Regulatory Enforcement Fairness Act

Western has determined that this rule is exempt from congressional notification requirements under 5 U.S.C. 801 because the action is a rulemaking of particular applicability relating to services and involves matters of procedure.

Responses to Comments Received on the Notice of Proposed Plan (62 FR 8710, February 26, 1997)

During the public consultation and comment period, Western received 26 letters commenting on the Proposed Plan. In addition, 12 customer and interested party representatives commented during the April 8 and April 24, 1997, public forums. Western reviewed and considered all comments received by the end of the public consultation and comment period, May 27, 1997, in preparing the Marketing Plan.

The following is a summary of the comments received during the consultation and comment period, and Western's responses to those comments. Comments are grouped by subject and paraphrased for brevity. Specific comments are used for clarification where necessary.

I. Public Participation and Process Implementation

Comment: Commentors supported the process Western used in developing the Marketing Plan. One comment expressed concern about the lack of opportunity for public participation.

Response: Western provided opportunities for public participation in preparing the Marketing Plan, 2004 EIS, and EPAMP, as described in this notice.

Comment: Some commentors said that since the contracts do not expire until 2004, Western should delay the Marketing Plan process. This delay would allow time to resolve uncertainty about the future of the industry, and allow other interests time to make arrangements to share power revenues with environmental and clean power goals. Other comments supported developing the Marketing Plan on the proposed schedule to provide customers with lead time for planning purposes.

Response: Because electric utility industry restructuring is already underway, delaying decisions may foreclose options for Western and its customers. To be an active participant in the newly restructured industry, Western needs to identify and work with its future customers to develop specific products to meet their needs. For many of Western's customers, Federal hydropower is a critical component of their resource mix, and knowledge of CVP resource availability is crucial to planning strategies for

dealing with utility restructuring. It is important that the Marketing Plan is not delayed because it takes time to develop contracts and arrange for transmission service. Western recognizes the need for flexibility in the changing utility industry and will offer Custom Products, such as firming power and ancillary services, to meet customers' needs. The Marketing Plan will not impact existing arrangements concerning funding of environmental restoration or advancement of clean power goals. These items are discussed more thoroughly in our responses to other comments.

II. Environmental Issues

Comment: Commentors stated that there are unresolved environmental issues associated with the operation of CVP dams, and that environmental protection mechanisms are insufficient or outdated. A commentor stated that if a contract extension decision is part of the Marketing Plan, new environmental protection mechanisms must be developed. Western was urged to create a trust fund(s) in which a portion of Western's existing power revenues would be set aside to mitigate environmental damage associated with operation of the Federal dams and to support the development of energy efficiency and renewable energy. Also, questions were raised as to whether Western has complied with NEPA in developing the Marketing Plan.

Response: Western completed the 2004 EIS in accordance with NEPA, the Council on Environmental Quality NEPA implementing regulations, and DOE's NEPA implementing regulations. The 2004 EIS examined the environmental impacts and identified no significant impacts to the human environment from marketing power from the CVP and Washoe Project. The Marketing Plan falls within the parameters analyzed in the 2004 EIS. The operation of CVP dams is dictated by other authorized project purposes such as flood control, navigation, water supply, and fish and wildlife. Environmental issues associated with the operation of CVP dams are being addressed by the CVPIA PEIS, including direct and indirect impacts on all fish, wildlife, and habitat restoration actions and the potential renewal of existing CVP water contracts. Western is a cooperating agency in Reclamation's PEIS process.

CVP power customers contribute significant revenue to the Restoration Fund, established under the CVPIA, which is designed to mitigate environmental consequences of the operation of Federal dams. Western supports renewable energy through its Policy for the Purchase of Non-Hydropower Renewable Resources (61 FR 43051, August 20, 1996). In accordance with the Energy Policy Act of 1992, Western encourages energy efficiency by requiring all firm power customers to prepare and keep current integrated resource plans.

III. Products and Services

A. Base Resource

Comment: Several commentors requested that Western reconsider its proposal to market power on an as-available basis. Suggestions were made that the Base Resource be further developed, including evaluation of purchasing energy, especially in dry years, to provide some minimum level of firm power and maximize use of the transmission assets available to Western, including the Pacific Intertie. Comments included requests for more information on firm availability, pricing, timing of commitment to purchase the Base Resource, and reliability of the Base Resource.

Response: CVP generation is expected to vary hourly, daily, monthly, and annually, based on hydrological conditions and other constraints that govern CVP operations; therefore, Western cannot accurately predict future availability. However, Western is willing to purchase energy to maintain some firm level of service to all customers. The amount of firming and the use of Western's transmission resources will be further developed by Western through a collaborative process with customers prior to product commitment by a customer. Because Western's rates will be determined through a separate public process, product pricing is outside the scope of the Marketing Plan. However, the costs associated with the hydropower system may be discussed during the collaborative process.

Comment: A commentor stated that the Base Resource concept will require a new and much closer working relationship with Reclamation, Federal water users, and other stakeholders.

Response: Western will continue to develop close working relationships with Reclamation, Federal water users, and other stakeholders.

Comment: One commentor asked if Western will include reserves or other ancillary services in the Base Resource.

Response: The Base Resource may be used in a manner the customer deems most beneficial, within operational constraints. Operating reserves and other ancillary services will be consistent with industry standards or may be provided with the Base Resource or the Custom Product on an as-requested basis. Provision of ancillary services, including reserves, will be developed with customer input.

B. Custom Product

Comment: Commentors suggested that Western develop some ''standardized'' Custom Products to allow customers to select a more firm service, similar to what is currently marketed. A commentor stated that negotiating with customers individually for firming the Base Resource would be more difficult, less transparent, and would increase risk. One commentor questioned whether the design of Custom Products would potentially cause cost-shifting among customers.

Response: Western designed the Marketing Plan to provide maximum flexibility to its customers. Development of ''standardized'' Custom Products for a customer or group of customers is not precluded by the Marketing Plan. The Marketing Plan was designed with this possibility in mind. Prior to product commitments, using a collaborative process, Western will develop Custom Products that most closely match customer needs. Using this collaborative approach will help ensure that information about Custom Product options will be available to everyone to minimize the risk of inequities. Also, by considering the needs of all similarly situated customers, due to economies of scale, Western may obtain better prices in the electric utility market when making firming purchases or obtaining other related services. Because all customers will equitably share in the cost of the Base Resource and each customer will pay only for the Custom Products which it specifically requests, any potential for cost-shifting is minimal.

Comment: A commentor suggested that Western needs to consider potential ramping rates if a customer chooses to schedule power deliveries.

Response: Under the Marketing Plan, all customers will be required to schedule power deliveries. Information on ramping rates applicable to the hydropower system will be made available prior to beginning service.

Comment: One commentor stated that preference customers should be allowed to help provide the products and services needed to firm the Base Resource for other customers wanting a firm Custom Product.

Response: The Marketing Plan does not preclude Western or customers from purchasing products and services from any supplier.

C. Exchange Program

Comment: Commentors supported and recommended further development of the concept of the Western-managed exchange program.

Response: Western will complete development of the exchange program through a collaborative process with customers.

D. Energy Banking Arrangements

Comment: A commentor said Western should begin planning now for termination of existing banking arrangements with Pacific Gas & Electric Company (PG&E) under Contract 14–06–200–2948A. If the existing account is ''cashed out,'' the benefits should be shared with all customers. Commentors suggested that Western pursue energy banking and firming arrangements beyond 2004, even though it may be difficult.

Response: Since existing banking arrangements will expire on December 31, 2004, they are outside the scope of the Marketing Plan. Western is willing to explore banking arrangements and other options during further development of the exchange program and Custom Products.

IV. Proposed Resource Percentages/ Pools

A. Allocation Methodology

Comment: A commentor requested that Western accommodate the seasonal nature of agricultural loads.

Response: The Base Resource depends on the generation pattern of the CVP, which is similar to the pattern of agricultural loads. If the Base Resource does not accommodate the seasonal nature of agricultural loads, Western will work with customers to develop Custom Products that will meet the customers' needs to the extent possible.

Comment: One commentor stated the Marketing Plan should not affect its contractual rights through 2004 to increase its contract rate of delivery (CRD) up to 50 MW.

Response: The Marketing Plan does not affect current contractual rights. If necessary, Western will accommodate these CRD increases and will effectuate related CRD decreases as provided for in certain existing contracts.

Comment: A suggestion was made that both energy and capacity should be used to determine customer resource extensions instead of the proposed CRD methodology. A comment further suggested that not using energy penalized customers with higher load factors for maintaining good load shapes. If rates are to be based on a split between capacity and energy, then the allocation should be based on capacity and energy.

Response: Existing customers' current allocations are based on capacity. Western believes that it is equitable to base the existing customers' resource allocation percentages on existing capacity commitments because, under existing contracts, Western's capacity obligation is fixed but the energy obligation is not. Many customer CVP energy purchases are based on economics, not on their load shape or energy entitlement. Unlike the current allocation methodology, the resources available under the Marketing Plan are based on generation rather than load. Basing the right to purchase generation output, which is limited by the capacity of the plants, on a CRD does not penalize customers with high load factors, rather it gives them no greater consideration. Allocating the power resources based on a rate design is not appropriate because the rate design for power sold under the Marketing Plan has not been determined and may be different from today's rate design.

B. Allocation Amounts

Comment: Western was requested to increase the 2005 Resource Pool percentage. Another comment requested withholding application of the Power Marketing Initiative, particularly during the period from 2005 through 2014 (when the Sacramento Municipal Utility District (SMUD) settlement is in effect).

Response: Comments received did not provide rationale for changing the resource pool percentages. However, Western considered many factors in determining the magnitude of the resource pools. Those factors included: (1) The loads of preference entities that applied for but did not receive power under the 1994 Power Marketing Plan; (2) impacts of restructuring and open transmission access; (3) the potential for new loads, including those of Native American tribes; and, (4) existing customer loads with limited Federal power compared to their needs. After careful consideration, Western determined that the combined resource pools in 2005 and 2015, totaling up to 6 percent of the Base Resource, would be equitable for potential new customers as well as existing customers. Withholding application of the Power Marketing Initiative (establishment of the resource pools) would potentially eliminate the ability of Western to serve new customers that may benefit from a Federal power allocation.

Comment: Some commentors stated that Western should maximize the global value of its Base Resource by minimizing both reductions and increases in the allocations that Western's current customers receive.

Response: The Marketing Plan provides for minimal increases or reductions in the pro rata amount of the power resources available to existing customers. However, due to the expiration of Contract 14–06–200–2948A with PG&E, and the associated firming arrangements, the Sierra Nevada Region may not be able to market power at the same level as in the past. Under the Marketing Plan allocation method, each allottee will receive a percentage of actual generation. The amount of power associated with an allocation percentage will vary, based on hydrological conditions and other constraints that govern CVP operations. The Marketing Plan attempts to mitigate reductions in availability or usability of the power resources for meeting customers' loads by offering the Custom Product, which could include a level of firming purchases.

Comment: A comment requested that allocation amounts reflect a customer's CRD as opposed to actual load.

Response: Western has decided that an existing customer's allocation percentage will be based on the customer's extension CRD. Western will adjust the existing customer's percentage if its actual load is less than the extension CRD. This criteria was adopted because Western does not believe it is sound business practice to allocate power based on a historical CRD that has never been fully used.

Comment: Commentors requested that temporary allocation increases remain with the current recipients.

Response: Contracts implementing the temporary reallocations provide that the original CRD be returned to the original customer.

Comment: One commentor suggested that the minimum load requirement for the resource pools be 500 kW instead of 1 MW.

Response: To avoid precluding smaller entities from receiving allocations from the resource pools, Western has modified the Marketing Plan to allow requests to serve loads that are less than 1 MW, but at least 500 kW, if they can be aggregated so Western can schedule and deliver to a minimum load of 1 MW.

Comment: A commentor objected to Western's approach regarding SMUD's rights under the 1983 Settlement Agreement in the Proposed Plan. The commentor urged Western to reach an accommodation with SMUD that would provide for SMUD's resource extension to be made on the same basis as all other existing customers, and questioned the logical basis for the fraction 360/1,152.

Public participation and joinder in regard to the SMUD settlement were also questioned. Further, it was recommended that if SMUD does not voluntarily agree to a reasonable accommodation, Western should recoup the over-allocation during the second 10-year period. Another commentor supported Western's approach.

Response: Contract DE–MS65–83WP59070 (Settlement Agreement) between Western and SMUD, dated April 15, 1983, provides that SMUD has a right to purchase 360/1,152 of all power allocated or sold by Western on or after January 1, 2005, through December 31, 2014. This Settlement Agreement was reached to resolve a lawsuit, *United States of America* v. *Sacramento Municipal Utility District,* Civil No. S–75–277, United States District Court for the Eastern District of California. The Marketing Plan is designed to mitigate the impacts of the Settlement Agreement on other customers by offering an Optional Purchase, which is equal to the additional amount of power allocated to SMUD. Western will adjust SMUD's percentage of the available resources after 2014 to put it on the same basis as other existing customers. The adjustment will include the amount that would have been contributed to the 2005 Resource Pool by SMUD in absence of the Settlement Agreement. Western does not agree that SMUD will receive an over-allocation for the first 10 years under the Marketing Plan because SMUD's percentage allocation is specified in the Settlement Agreement. Therefore, SMUD should not be penalized during the second 10 years of the Marketing Plan. The fraction 360/1,152 referenced in the Settlement Agreement represents SMUD's CRD of 360 MW and Western's maximum simultaneous load level of 1,152 MW at the time of the settlement.

Allowing public participation in litigation would severely undermine Western's ability to protect the Government's interest. Western is not required to join every preference customer or every potential preference customer in a lawsuit in which Western is a party. Upon proper motion, the court determines when and if joinder of a person is needed for just adjudication.

C. Allocations Due to Special Circumstances

Comment: Commentors requested that CVP power continue to be available at cost to long-term customers. If these customers do not receive a power allocation under the Marketing Plan, the economic consequences would be significant.

Response: Western will offer the greater portion of the CVP resources to existing customers. The economic analyses done for the 2004 EIS showed that the greatest socioeconomic benefits would be expected to occur if Western's existing customers continued to receive power from Western.

Comment: A few commentors stated that Federal hydroelectric power should be used to benefit the public. They suggested that Western give priority to those who meet certain additional criteria, including, demonstrating environmental responsibility in mitigating any damages associated with Federal dams; developing and/or integrating solar and other renewable energy and energy efficiency into their resource mix; supporting educational institutions; and not requiring supplemental purchases.

Response: Western markets power in a manner that will encourage the most widespread use at the lowest possible rates consistent with sound business principles. Within broad statutory guidelines and operational constraints of the CVP, Western has wide discretion as to whom and under what terms it will contract for the sale of Federal power, as long as preference is accorded to statutorily defined public bodies. Western cannot measure the value of the public benefits provided by an entity when allocating its power and, therefore, will not base an allocation on an entity's mission. Although not specifically addressed in the Marketing Plan, Western supports programs for the public good.

Western supports renewable energy through its Policy for the Purchase of Non-Hydropower Renewable Resources, and encourages energy efficiency by requiring all firm power customers to prepare and keep current integrated resource plans. Further, CVP power customers contribute significant revenue to the Restoration Fund, established under the CVPIA, which is designed to mitigate environmental consequences of the operation of Federal dams.

Comment: A comment suggested that priority be given to entities with longstanding requests.

Response: Previous requests were considered in determining the size of the resource pool. Western receives numerous requests for power and does not believe a previous request should be given a higher priority over requests by qualified entities that have not applied previously.

Comment: A commentor suggested Western give higher priority to entities that can readily accept an allocation.

Response: The Marketing Plan includes eligibility criteria requiring that all applicants requesting power must be ready, willing, and able to receive and use or distribute Federal power.

Comment: Western was requested to extend the spirit and concept of the National Defense Authorization (NDA) Act. Several comments requested that the definition of extension CRD be modified so that NDA Act power used for economic development is not excluded. By doing so, entities receiving allocations of NDA Act power for economic development purposes would be eligible for resource extensions under the Marketing Plan. One comment stated that the definition of extension CRD violates the provisions of the NDA Act because the legislation requires that NDA Act power be reserved for allocation for a 10-year period (commencing November 30, 1993). This commentor contends that the legislation provides for allocations made during this 10-year period to extend past December 31, 2004. Commentors requested that NDA Act power extend through the completion of economic development. Another commentor requested that Western not extend the provisions of the NDA Act past December 31, 2004.

Response: The Proposed Plan is consistent with the NDA Act. However, Western has reconsidered its position regarding allocations for NDA Act customers. Western has decided to extend the spirit and concepts of the NDA Act to those existing customers receiving NDA Act power for economic development purposes, provided those customers continue to meet the eligibility requirements for an allocation under the Marketing Plan. The Marketing Plan has been modified to reflect this change.

V. General Criteria and Contract Principles

Comment: A commentor suggested that, under take-or-pay provisions, the resale (remarketing) prohibition should be eliminated. Other commentors stated that, in the competitive environment, Western will not be able to enforce the resale prohibition, and customers will receive an unfair advantage with the ability to ''profiteer'' in regional electricity markets.

Response: Western is not convinced that the prohibition on reselling Federal power should be eliminated due to the take-or-pay provisions. Customers' loads are expected to be sufficient to use all available Western power most of the time. Western realizes that, at times, due to the variability of CVP generation,

some customers may not be able to use their full power allocation. Therefore, Western will establish and manage an exchange program. Any Western power that cannot be used on a real-time basis must be offered to Western or to other preference customers under this program.

Comment: A comment suggested Western consider marketing a portion of CVP capacity to the California Power Exchange or other marketers.

Response: Western markets power first to preference entities under Reclamation laws. However, if Western is unable to market all of its power to preference entities, it may be sold to others.

Comment: Many commentors supported the 20-year contract term, citing the additional value of a long-term contract which allows customers who purchase Federal power greater stability in planning for future resources than would exist with a shorter contract term.

Other comments objected to a 20-year contract term citing reasons for a shorter contract term. One commentor suggested contract terms of no more than 5 years or auctioning contracts to qualified bidders.

Response: The 20-year contract term provides greater resource certainty for Western customers in a restructured industry, and greater certainty of revenues for project repayment by Western. Shorter contract terms degrade the marketability of the resource and create an administrative burden. An EIS, which included a significant amount of analysis as well as a public involvement process, was conducted on the provisions of EPAMP, including a 20-year term. The EPAMP EIS found that longer contract terms were positive for the environment, as customers were more likely to invest in renewable resources if they had a stable foundation of Federal hydropower. Short-term contracts could lead customers to develop resources that are cheaper in the short term but more environmentally adverse. Future load requirements are not a significant consideration as Western is a partial requirements provider and is generally not responsible for meeting customer load growth.

Contract extensions would not preclude any Congressional or administrative actions because contracts or rate changes could be included as part of a sale or restructuring package. The Marketing Plan does not impact or preclude future operational changes at Federal dams because Western will market only the available power generation. Because Western is required to market power at cost-based rates, auctioning contracts is not practical. Power must be sold to preference entities first and not just to the highest bidder. Western has included the 20-year contract term in the Marketing Plan.

VI. First Preference

Comment: A comment supported using 20-year average historical generation to calculate the maximum entitlement of first preference customers (MEFPC), rather than a 5-year average. Other commentors stated using 20-year average historical generation to calculate the MEFPC is inappropriate because it does not account for generation lost due to fishery restoration operations and other environmental factors, would unfairly penalize other preference customers, and would exceed statutory requirements. A commentor stated that first preference customers should not be immune to the vagaries of generation. Some comments requested a floor MEFPC be established, based on generation prior to CVPIA operations. Using all historic generation before fishery restoration was also suggested.

Response: The New Melones Project provisions of the Flood Control Act of 1962 (76 Stat. 1173, 1191–1192) and the Trinity River Division (TRD) Act (69 Stat. 719) (Acts) specify that first preference customers are entitled to up to 25 percent of the power generated as a result of the construction of the New Melones Project and the Trinity River Division (first preference projects). Under its discretionary authority, Western determines how the entitlements are to be calculated. Western believes the most recent 20-year average historical generation is consistent with the Acts because it accounts for generation resulting from the first preference projects under a variety of hydrological conditions, and takes into consideration impacts of changing operations such as those contemplated under the CVPIA. The Acts do not guarantee a minimum amount of power to the counties of origin; therefore, Western does not believe a floor MEFPC is appropriate.

Comment: A commentor requested more information on the calculations used to determine the MEFPC.

Response: The Marketing Plan specifies the data to be used and how the MEFPC will be calculated.

Comment: A commentor questioned why the MEFPC will only be adjusted if, upon recalculation, it is 10 percent above or below the currently effective MEFPC.

Response: To eliminate minor or short-term fluctuations, Western has decided to adjust only for a 10 percent or greater difference in the MEFPC.

Comment: Comments were received both in favor of and in opposition to the first preference customers' full requirements option at the Base Resource rate, without the take-or-pay provision. One commentor stated that all customers should be treated economically the same.

Response: The full requirements option will be supplied from the same power resources as the Base Resource; therefore, it is reasonable to apply the Base Resource rate. It is not appropriate to apply the take-or-pay provision to the full requirements option because the first preference customers will not have a fixed percentage amount under this option. Western will continue to offer the full requirements option to the first preference customers.

Comment: A commentor said he assumed that the load factor referred to in the full requirements option is intended to apply only to those first preference customers who cannot measure their demand.

Response: In the future it may be necessary to determine a maximum capacity from the MEFPC. This calculation will require use of a load factor for each first preference customer. However, it will not be necessary to provide a load factor in the contracts, and the Marketing Plan now reflects this clarification.

Comment: Some commentors who opposed the full requirements option stated that it is beyond Western's statutory requirements and is unfair to the other customers. It was suggested that a daily entitlement be established based on actual generation. First preference customers should be provided with the Base Resource and should pay the cost of creating a Custom Product in the same manner as all other customers.

Response: The Acts specify that first preference customers are entitled to receive up to 25 percent of the additional power generated as a result of construction of the first preference projects. Western has discretion in how it fulfills the requirements of the Acts. When Congress authorized construction of the first preference projects, it balanced the concerns of the counties of origin and the benefits the first preference projects would have to the entire CVP. Western believes that Congress attempted to provide a fair remedy to all parties involved. It is within the spirit of the Acts to make the maximum amount of the MEFPC available to the first preference

customers to the extent it can be used to meet their loads. Power deliveries under this option would be nearly identical to what they are today. Western believes this arrangement will have minimal impact on the other customers; therefore, we will continue to offer the full requirements option.

Comment: Comments requested that first preference customers who choose the percentage option be allowed to participate in the exchange program, using some or all of their MEFPC.

Response: Under the percentage option, first preference customers would be allowed to participate in the exchange program to the same extent as the other customers.

Comment: A commentor suggested that the Marketing Plan should provide for first preference customers to receive 25 percent of the energy generated from the TRD, exactly as the legislation provides, at the cost to produce that energy.

Western was requested to provide additional options that would allow first preference customers to schedule up to 25 percent of the energy produced as a result of the first preference projects, at prices that reflect the cost to produce first preference project energy. Options should provide for first preference customers to call upon historic generation that they did not use during times when 25 percent of first preference project energy is less than their load. If first preference customers are not allowed to call upon historic generation that they did not use, Western should allow them to trade or bank some of the 25 percent of what is produced by the first preference projects in the future.

Other comments recommended that the Marketing Plan should reflect past legal resolution of issues regarding use and pricing of first preference power.

Response: The Acts do not provide for Western to furnish more power than can actually be used by the first preference customers within the counties of origin. First preference customers are not entitled to historic generation they were unable to use. Also, the Acts do not provide for energy banking arrangements. With respect to providing the energy at the cost to generate power at the first preference projects, both Acts state,

> * * * contracts for the sale and delivery of the additional electric energy available from the Central Valley Project power system as a result of the construction of the plants * * *

In *Trinity County Public Utilities District* vs. *Harrington* (781 F.2d 163 (9th Cir. 1986)), the court held that since the first preference projects are operationally and financially integrated with the CVP, the first preference customers should pay rates based on the operating costs of the CVP system.

Comment: It was requested that a menu of services be offered to the first preference customers, coupled with certain first preference rights, like the sale of energy at first preference project cost.

Response: First preference customers are offered two options—the full requirements option and the percentage option. Under the percentage option, first preference customers may choose to customize their allocation with the Custom Product and participate in the exchange program. See Western's response above concerning rates for first preference customers.

Comment: One commentor stated that the percentage option could not be used by first preference customers to gain greater benefits than would be available under the full requirements option, even though they are entitled to greater benefits. The commentor suggested that, other than a few differences, the percentage option makes first preference customers almost equal to other customers.

Response: The principal benefit granted to first preference customers under the Acts is the first right to purchase a portion of the additional generation made available to the CVP as a result of the construction of the first preference projects, for use in the counties of origin. Under the percentage option, the first preference customers' allocations will be determined similarly to the other customers. However, first preference customers' allocation percentages will be based on their actual loads, not on a CRD. First preference customers will not be subject to adjustments in their allocation percentages for the resource pools. Additionally, first preference customers will have the opportunity to adjust their allocation percentages, with a 7-month notice to and approval by Western, up to their share of the MEFPC. Western believes that both the percentage option and the full requirements option provide the benefits required under the Acts.

Comment: One commentor stated that 12 months of load data is not reflective of actual usage, and requested that Western modify the factors used in the calculation to determine a first preference customer's percentage.

Response: Western has modified the Marketing Plan to provide for the maximum demand during the previous 4 years to be used in determining an allocation percentage under the percentage option.

Comment: A few commentors stated that Western is required under both Acts to provide transmission services to first preference customers. Additionally, Western was requested to commit to provide transmission service with the basic service at the basic rate to the first preference customers. One commentor suggested that first preference customers should be exempt from Section V.G.

Response: The TRD Act authorizes Western to provide electric transmission facilities as may be necessary to furnish energy to Trinity County. Western owns transmission facilities in Trinity County. Should additional facilities be required, appropriations or customer advancement of funds would be necessary before such facilities could be constructed. There is no similar clause in the New Melones Project provisions of the Flood Control Act of 1962 with respect to Calaveras and Tuolumne Counties. Western will assist in providing transmission service to the first preference customers. Although Western is willing to assist, all customers are ultimately responsible to provide for the delivery of Federal power to their loads. Accordingly, Section V.G, requiring customers to obtain their own third-party transmission service, is applicable to all customers.

Western has voluntarily filed an Open Access Tariff consistent with FERC Order No. 888. Transmission costs will be identified separately from power costs, and all transmission users will bear an equitable share of those costs.

Comment: Comments were received both in favor of and in opposition to the provisions of the Proposed Plan relating to the first preference customers. Those in favor of the provisions stated they are appropriate and encouraging. Those in opposition stated the provisions exceed Western's requirements under the Acts and provide the first preference customers with better products than those offered to the other customers. Some first preference customers indicated dissatisfaction with the benefits they are currently receiving under their respective Acts in comparison to the sacrifices they made to allow construction of the first preference projects.

Response: To compensate the counties of origin for their sacrifices, both Acts require Western to provide the counties of origin with the amount of energy they can use, up to 25 percent of the additional energy generated by the CVP as a result of the construction of the respective first preference projects. Under its discretionary authority, Western determines the manner in which this energy is made

available to first preference customers. Western believes it is appropriate to continue to provide these customers with the opportunity to choose between the two options in the Marketing Plan. This will allow those customers to decide how to make the best use of the benefits they are entitled to receive. Whether either of the options results in a ''better'' product than that received by other customers would depend on many factors outside of Western's control, such as future energy prices, and is secondary to meeting the spirit and intent of the Acts.

Comment: A comment requested that Western provide a summary supporting the Marketing Plan's compliance with the TRD Act.

Response: Section 4 of the TRD Act of 1955 states,

> Contracts for the sale and delivery of the additional electric energy available from the Central Valley Project power system as a result of the construction of the plants herein authorized and their integration with that system shall be made in accordance with preferences expressed in the Federal reclamation laws: *Provided*, That a first preference, to the extent of 25 per centum of such additional energy, shall be given, under Reclamation law, to preference customers in Trinity County, California, for use in that county, who are ready, able, and willing within 12 months after notice of availability by the Secretary, to enter into contracts for the energy: *Provided further*, That Trinity County preference customers may exercise their option on the same date in each successive fifth year providing written notice of their intention to use the energy is given to the Secretary not less than 18 months prior to said date.

In accordance with the TRD Act, Section VI of the Marketing Plan provides that Western will calculate and make available to preference customers/entities in Trinity County, to the extent they can use it within that county, 25 percent of the additional energy made available to the CVP as a result of the construction of the TRD. These first preference customers have the right to this power before it is made available to other preference customers. Both options provide that the power be made available to these first preference customers to meet their needs, and the amount of power can be increased until it reaches the limit set forth in the TRD Act. A first preference entity may exercise its rights to use a portion of the MEFPC by providing written notice to Western at least 18 months prior to the anniversary date of the first preference project located in its county.

Comment: A commentor supported dividing the MEFPC from the New Melones Project between Calaveras and Tuolumne Counties. That commentor requested a provision be added to the Marketing Plan, allowing the counties of Calaveras and Tuolumne to combine their allocations for the purpose of joint load management.

Response: Western is willing to consider combining allocations for the New Melones' counties of origin if it is requested by the affected parties. Such an arrangement is an operational procedure and does not need to be specified in the Marketing Plan.

Comment: A comment suggested that Western should share the revenue received from sales of unused first preference power with the first preference customers.

Response: Under applicable legislation, there is no basis to share revenues with the first preference customers.

Comment: Some first preference customers stated that they are assuming that they will not be charged for scheduling services. Western was requested to clarify the phrase ''scheduling arrangements'' (Proposed Plan Section V.C).

Response: The phrase ''scheduling arrangement'' as used in Section V.C of the Proposed Plan was included because Western anticipates that power deliveries will no longer be determined after the fact, which is allowed under Contract 14–06–200–2948A. Schedules will be agreed upon prior to delivery. Scheduling is required under both options for the first preference customers, as well as for all other customers. Under the restructured electric utility industry in California, Western or the customer's scheduling agent will be required to provide schedules for all power deliveries within the California Independent System Operator (ISO) control area. The first preference customers may perform their own scheduling or contract with Western or a third party to perform scheduling services. If Western is requested to perform scheduling services, the cost will be borne by each customer requesting such service. This cost will be identified separately from the Base Resource rate.

Comment: Commentors requested that Western clarify the phrase ''power requirements'' (Proposed Plan Section VI.D.1).

Response: The reference to ''power requirements'' as used in Section VI.D.1 of the Proposed Plan means the capacity and energy necessary to serve a first preference customer's load from that first preference customer's share of the MEFPC. The statement concerning power requirements has been clarified in the Marketing Plan.

Comment: A commentor requested that Western clarify the statement in Section VI.B of the Proposed Plan that Western may purchase power on behalf of the first preference customers to compensate for any power loss due to recalculation of the MEFPC.

Response: This provision has been clarified in the Marketing Plan.

Comment: Comments were received stating that priority should be given to first preference entities that are wholly located within the counties of origin. Also, if a contract extension is granted to a first preference customer or a new contract is executed with a first preference entity that is not entirely located within a county of origin, it should be for power withdrawable to serve first preference customers/entities that are wholly located within that county of origin. A comment also requested the definition of a first preference customer/entity include the following language,

> one which serves and provides a direct and measurable benefit to the residents of the counties of Trinity, Calaveras, and Tuolumne.

Response: The definition of a first preference customer/entity must be consistent with the Acts and Reclamation law. Both Acts provide for electric service to be made available to entities who qualify for preference under Reclamation law and are located in their respective counties. Therefore, entities located in Tuolumne, Calaveras, or Trinity Counties who are preference entities qualify for first preference rights. The Marketing Plan is consistent with the Acts.

Comment: A commentor said he assumed that Section VI.E of the Proposed Plan is applicable only to new first preference customers.

Response: Section VI.E of the Proposed Plan, regarding applications for first preference power, applies only to first preference entities. First preference entities are entities who are qualified to use, but are not currently using, preference power within a county of origin. They are qualified to be first preference customers but are not yet customers.

Comment: One commentor suggested that first preference customers had been inappropriately exempted from Section V.B, allocation percentage adjustment clause, as referenced in Section VI.J of the Proposed Plan.

Response: Western has determined that Section V.B will be applicable to the first preference customers, and the Marketing Plan has been so modified.

VII. Transmission

Comment: One commentor stated that Western's transmission obligations under separate transmission contracts must be honored. Another commentor asked how Western plans to deal with the DOE Labs' 100 MW entitlement on the California-Oregon Transmission Project and their capacity entitlement on the Tracy Tie Line.

Response: The Marketing Plan does not modify Western's existing contractual transmission rights or obligations, including DOE's entitlements.

Comment: A commentor expressed concern that the unbundling of transmission service from power services would have an adverse impact on Western's customers, and Western should not require customers to go through a separate process to obtain transmission. It was suggested that Western make a ''delivered'' product available, or otherwise use transmission assets to firm the Base Resource, particularly in dry years. It was further suggested that, if customers use the transmission systems of others for delivery of CVP power, they should still be responsible for a portion of Western's transmission system costs.

Response: Western is not a FERC jurisdictional utility, but has agreed to comply with the spirit and intent of FERC Order No. 888, to the extent it does not conflict with Western's legislative mandates. If it is feasible in the restructured electric utility industry, Western is willing to evaluate bundled services, including use of its transmission access to the Northwest, during further development of the Base Resource, Optional Purchase, and Custom Products. All customers who use Western's transmission system will share cost responsibility for the transmission system.

Comment: One commentor stated that Western's current Pacific Intertie transmission service level does not fully reflect Western's ownership of its portion of the Pacific Intertie.

Response: Western's current level of Pacific Intertie transmission is outside the scope of the Marketing Plan.

Comment: One commentor stated that Western needs to consider its products' impacts on other customers, particularly Western's direct-connect customers who rely on Western's transmission system.

Response: Western considered the potential impacts of its products on all customers, including direct-connect customers. It is Western's intent to offer products which are useful and beneficial to all customers.

Comment: One commentor objected to Western's proposal to assess transmission losses to customers that are directly connected to Western's transmission system.

Response: Under the Marketing Plan, power will be available as a system sale, not from specific points of generation. It is necessary to account for the power that is lost between generation and load. Therefore, all power deliveries using the CVP transmission system will be subject to loss assessments.

Comment: One commentor requested Western assume a position of advocacy on its customers' behalf in regard to access and pricing of third-party transmission. Western was urged to reserve sufficient capacity on its transmission system to accommodate its customers' requirements for wheeling of both CVP and purchased firming power. Western was encouraged to explore ways in which its customers will have a superior entitlement to schedule capacity on Western's transmission system, while avoiding the problem of double-billing for transactions utilizing both the Federal and non-Federal systems.

Response: Access to and pricing of third-party transmission is outside the scope of the Marketing Plan. Western will provide transmission services as appropriate in conjunction with its power sales in a manner consistent with FERC Orders and legislated mandates. Use of Western's transmission resources will be determined as the products and services to be provided by Western are further developed.

VIII. Pricing and Rates

Comment: Commentors expressed concerns that, in order to commit to a long-term Marketing Plan, a clear idea of prices and availability of power is needed. They stated that the bulk power market is often trading below Western's current price range, and uncertainties such as the Restoration Fund make it even more unattractive to choose Western.

Response: Western will sell the Base Resource at a cost-based rate, and the Custom Product at a pass-through cost. The ratemaking process is separate from the Marketing Plan; however, as in all Administrative Procedure Act processes, public participation will be encouraged. Costs and availability will be more clearly identified by the time commitments are required for the Base Resource.

Western has no control over Restoration Fund costs; however, Western is striving to minimize Western components of power costs and customize products in an attempt to provide the best possible service at the lowest possible rates consistent with sound business principles. Western expects its prices to be at or below the bulk market by the time the Marketing Plan goes into effect.

Comment: Although the take-or-pay method was commented upon favorably, some commentors stated take-or-pay contracts require details on prices and products, and are unrealistic unless they are for short terms. A comment was received favoring cost-of-service ratemaking with a take-or-pay provision for ''must-run power.''

Response: The take-or-pay approach is expected to provide adequate revenues to ensure project repayment. The Base Resource will be sold at a cost-based rate that will be developed in a public process in which customers and interested parties may participate. Other products will be sold on a pass-through-cost basis. By the time product commitments are required, individual customer need and pricing and availability information will be more clearly defined.

Comment: A commentor requested that Western negotiate for firming resources on behalf of its entire customer base so that certain customers will not be competing in the bulk power market against Western.

Response: The Marketing Plan reflects the option for Western to negotiate for firming as part of the Custom Product on behalf of its entire customer base, a group of customers, or individual customers, if requested by those customers.

Comment: Western should postpone a decision on Washoe Project cost recovery until more definitive information can be provided.

Response: Western believes all necessary information concerning the marketing of Washoe Project power is available and has been considered. Western sees no benefit in delaying the decision to market Washoe Project power with the CVP resource.

IX. Industry Restructuring

Comment: A commentor stated that restructuring has changed the rules of the game to the point that Western's proposals are inconsistent with public interests. Another commentor encouraged Western to retain flexibility to accommodate changes in the industry.

Response: Western believes it is in the public interest to provide some resource certainty to its customers and to protect the Federal investment in project facilities. The Marketing Plan is designed to be flexible enough to respond to changes in CVP operations and the industry, and to provide the

greatest value to customers and the Federal Government.

Comment: A commentor asked if joining the California ISO will pose any problems for Western.

Response: Whether Western will join the California ISO is a separate decision from development of the Marketing Plan. The Marketing Plan does not preclude Western's participation in the California ISO.

Comment: A commentor suggested that Western should recognize the new competitive market and help its preference customers wherever possible with competition transition charge problems.

Response: Western designed the Marketing Plan to be flexible to respond to changes in the industry and provide the greatest value to its customers. Products and services available under the Marketing Plan can be customized to meet individual customer's needs in the new competitive market.

Competition transition charges are outside the scope of the Marketing Plan.

Responses to Comments Received on the Notice of Public Process on Resource Pool Size (64 FR 4646, January 29, 1999)

During the public consultation and comment period, Western received five letters commenting on the Sierra Nevada Region's resource pool size. No comments were received during the February 9, 1999, public meeting in Folsom, California. Western reviewed and considered all comments received by the end of the public consultation and comment period, March 1, 1999, in preparation of the Marketing Plan.

The following is a summary of the comments received during the consultation and comment period, and Western's responses to those comments.

Comment: Some comments stated that the proposed sizes of the resource pools were adequate to meet the needs of new customers, including the fair share needs of eligible Native American tribes.

Response: Western considered the needs of new customers, including Native American tribes, when determining the sizes of the resource pools during development of the Marketing Plan. Western concurs with this comment.

Comment: A commentor stated that a larger allocation percentage, such as 30 percent, would be necessary for certain Native American tribes in Southern California. That commentor also suggested that an allocation be set aside for them and dedicated to tribal economic development.

Response: Southern California is outside the primary marketing area of the Sierra Nevada Region. The Desert Southwest Customer Service Region of Western serves Southern California and will develop its marketing program prior to the expiration of its current electric service contracts.

Comment: As Western's Marketing Plan becomes more definitive, it would be beneficial for PG&E to review the Marketing Plan in advance to assure consistency with any possible post-Contract 14–06–200–2948A (integration contract with PG&E) contractual relationship.

Response: Under the Administrative Procedure Act, Western cannot discuss the final Marketing Plan with any entities prior to publication.

Comment: In determining the level of benefits to Native Americans, Western should take into account the benefits currently received through rural electric cooperatives serving the reservations. Western should attempt to fairly distribute the benefits of low-cost Federal hydropower, ensuring equity among all eligible tribes and existing customers.

Response: The allocation and eligibility criteria in the Marketing Plan were developed to ensure the benefits of Federal power were equitably distributed among new customers, including eligible Native American tribes, and existing customers.

Comment: Power could be provided to a utility to serve a tribe; however, the tribe would actually hold the allocation. By way of a bill crediting system, the Federal power benefits could be passed on to the tribe through a credit on its utility bill.

Response: Western intends to allocate power directly to any eligible Native American tribes that apply for power. The Sierra Nevada Region will work with tribes to receive power under the California direct access rules or other applicable arrangements, which may include bill crediting.

Comment: If a Native American tribe establishes a utility and seeks an allocation from the resource pool, that tribal utility should be treated as a utility applicant and subject to the same qualifications and provisions to which all Federal power customers are subject.

Response: Native American tribal utility applicants will be treated similarly to other utility applicants.

Summary of Revisions to the Proposed Plan

Western revised the Marketing Plan as a result of the comments received during the comment period and public forums. Additionally, some changes have been made to more clearly define the intent, but do not change the original proposal. The major revisions are summarized as follows.

The definitions of administrator, curtailable power, diversity power, load factor, long-term, NDA Act power, peaking, power marketing initiative, unbundled, and withdrawable have been deleted. These definitions were deleted because they are not necessary terms in the final Marketing Plan. The definition of customer was deleted and will be used as a generic term to refer to new allottees and/or existing customers. A definition for the Optional Purchase was added to assist in understanding that product. These modifications appear in Section I, and are used throughout the Marketing Plan.

In the formulas in Section IV.A.1 and IV.A.2, Western will base an existing customer's allocation percentage on its extension CRD as of December 31, 2003, rather than December 31, 2001. Western will adjust an existing customer's percentage on December 31, 2003, if its maximum monthly peak load for the previous 3 years is less than its extension CRD, rather than basing the existing customer's extension CRD on 104 percent of its load during the previous 4 years. This modification also appears in Appendix A.

Extension CRD was modified to include NDA Act power used for economic development. This modification appears in Section I and Appendix A.

Western has decided not to market unused first preference power on a withdrawable basis. Unused first preference power will be included as part of the Base Resource and available to all other customers. Sections I and III were modified. Section V.F of the Proposed Plan has been deleted.

The commitment date has been changed to December 31, 2000, for the Base Resource and Optional Purchase, and to December 31, 2002, for the Custom Product. Additionally, Western may extend the commitment dates for the Base Resource, Optional Purchase, and Custom Product if Western determines it is in the best interest of Western and the customers. This modification appears in Sections III and V.

Unused power resources may be marketed outside the primary marketing area. This modification appears in Section III.

Existing customers must commit to the Optional Purchase for a 10-year period, from January 1, 2005, through December 31, 2014, rather than an annual or greater period. This modification appears in Section III.

The Call for Resource Pool Applications will be published in a

separate **Federal Register** notice. This modification appears in Section IV.B.2.e.

Existing customers may apply for a resource pool allocation if their extension CRD is not more than 15 percent of their peak load in the calendar year prior to the Call for Applications, rather than calendar year 1996. This modification appears in Section IV.B.2.g.

Requests to serve new loads that are less than 1 MW, but at least 500 kW, will be allowed if they can be aggregated so Western can schedule and deliver to a minimum load of 1 MW. This modification appears in Section IV.B.2.h.

Western will base a resource pool allocation on an applicant's peak demand during the calendar year prior to publication of the Call for Applications. The amount used to determine a resource pool allottee's allocation percentage will not be rounded up to the nearest 100 kW. This modification appears in Section IV.B.3.b.

Eligible Native American entities will receive greater consideration for an allocation of up to 65 percent of their peak load in the calendar year prior to the Call for Applications. This modification appears in Section IV.B.3.e.

First preference customers will be subject to Section V.B, which clarifies that allocation percentages provided for in the Marketing Plan and the electric service contracts shall be subject to adjustment. This modification appears in Sections V.B and VI.K.

Contracts will include a clause specifying criteria that customers must meet on an ongoing basis to be eligible to continue receiving electric service from Western. This modification appears in Section V.F.

Although Western may assist, each customer will be responsible for obtaining its own delivery arrangements to its load. This modification appears in Section V.G.

Western may reduce or rescind a customer's allocation percentage, upon 90-days notice, if Western determines that the customer is not using the power to serve its own loads or the allocation amount is consistently greater than the customer's maximum peak load. This modification appears in Section V.K.

Contracts may include a clause providing for alternative funding arrangements, including net billing, bill crediting, reimbursable financing, and advance payment. This modification appears in Section V.N.

The initial recalculation of the MEFPC pertaining to this Marketing Plan will be completed by June 1, 2004. This modification appears in Section VI.A.

The commitment date for first preference customers to commit to the percentage option has been changed to December 31, 2002. This modification appears in Section VI.D.

Under the full requirements option, if there is more than one first preference customer in a county of origin, or a first preference entity in that county makes a request for power, Western reserves the right to establish a maximum amount of power available to each first preference customer from the MEFPC. This modification appears in Section VI.D.1.

For first preference customers, Western will use the maximum demand during the previous 4 years, rather than the last 12 months, in determining an allocation percentage under the percentage option. This modification appears in Section VI.D.2.

A first preference customer's request for an increase in its allocation percentage under the percentage option must be accompanied by justification for the increase. This modification appears in Section VI.D.2.c.

First preference customers will be subject to Section V.L, which states that any power not under contract may be allocated at any time, at Western's sole discretion, or sold as deemed appropriate by Western. This modification appears in Section VI.K.

Western will provide bundled or unbundled transmission services with its power sales, consistent with FERC Orders, legislated mandates, or California ISO Agreements. This modification appears in Section VII.

Appendix A was updated to reflect new customers and changes in CRD.

2004 Power Marketing Plan

This Marketing Plan addresses: (1) The power to be marketed after December 31, 2004, which is the termination date for all Central Valley Project (CVP) electric service contracts; (2) the general terms and conditions under which the power will be marketed; (3) the resources available to existing customers; and (4) the criteria to determine who will receive allocations from the resource pools.

The Western Area Power Administration (Western) will continue a collaborative process in implementing the terms set forth in this Marketing Plan.

Within broad statutory guidelines and operational constraints of the CVP and the Washoe Project, Western has wide discretion as to whom and under what terms it will contract for the sale of Federal power, as long as preference is accorded to statutorily defined public bodies. Western markets power in a manner that will encourage the most widespread use at the lowest possible rates consistent with sound business principles. All products and services provided under this Marketing Plan will be subject to operational requirements and constraints of the CVP and Washoe Project, transmission availability, purchase power limitations, and Federal authorities.

I. Acronyms and Definitions

As used herein, the following acronyms and terms, whether singular or plural, shall have the following meanings:

Allocation: An offer from Western to sell Federal power for a certain period of time, that will convert to a right to purchase after execution of a contract.

Allocation Criteria: Conditions applied to all applicants who receive an allocation.

Allottee: An entity receiving an allocation percentage under this Marketing Plan.

Ancillary Services: Those services necessary to support the transfer of electricity while maintaining reliable operation of the transmission provider's transmission system in accordance with good utility practice. Ancillary services are generally described in Federal Energy Regulatory Commission (FERC) Order No. 888 (Docket Nos. RM95–8–000 and RM94–7–001), issued April 24, 1996.

Base Resource: CVP and Washoe Project power output and existing power purchase contracts extending beyond 2004, determined by Western to be available for marketing, after meeting the requirements of project use and first preference customers, and any adjustments for maintenance, reserves, transformation losses, and certain ancillary services.

Capacity: The electrical capability of a generator, transformer, transmission circuit or other equipment.

Central Valley Project (CVP): A multipurpose Federal water development project extending from the Cascade Range in northern California to the plains along the Kern River, south of the City of Bakersfield.

Contract Principles: Provisions of the electric service contracts, including Western's General Power Contract Provisions.

Contract Rate of Delivery (CRD): The maximum amount of capacity made available to a customer for a period specified under a contract.

Custom Product: A combination of products and services, excluding

provisions for load growth, which may be made available by Western per customer request, using the customer's Base Resource and supplemental purchases made by Western.

Eligibility Criteria: Conditions that must be met to qualify for an allocation.

Energy: Measured in terms of the work it is capable of doing over a period of time; electric energy is usually measured in kilowatthours or megawatthours.

Existing Customer: A preference customer with a contract to purchase firm power, offered under a previous allocation process or marketing plan, that extends through December 31, 2004.

Extension CRD: An existing customer's CRD exclusive of diversity and curtailable power, and peaking/excess capacity, as it may be adjusted in accordance with this Marketing Plan.

Firm: A type of product and/or service that is available to a customer at the times it is required.

First Preference Customer/Entity: A preference customer and/or a preference entity (an entity qualified to use, but not using preference power) within a county of origin (Trinity, Calaveras, and Tuolumne) as specified under the Trinity River Division Act (69 Stat. 719) and the New Melones project provisions of the Flood Control Act of 1962 (76 Stat. 1173, 1191–1192).

General Power Contract Provisions (GPCP): Standard terms and conditions which are included in Western's electric service contracts.

Integrated Resource Plan (IRP): A process and framework within which the costs and benefits of both demand and supply-side resources are evaluated to develop the least total cost mix of utility resource options.

Kilowatt (kW): A unit measuring the rate of production of electricity; one kilowatt equals one thousand watts.

Marketing Plan: Western's final 2004 Power Marketing Plan for the Sierra Nevada Region.

Megawatt (MW): A unit measuring the rate of production of electricity; one megawatt equals one million watts.

National Defense Authorization Act (NDA Act): Section 2929 of the National Defense Authorization Act, Pub. L. 103–160, 107 Stat. 1547, 1935 (1993), which provides that, for a 10-year period (starting in 1993), the CVP electric power allocations to military installations in the State of California, which have been closed or approved for closure, shall be reserved for sale through long-term contracts to preference entities which agree to use such power to promote economic development at the military installations closed or approved for closure.

Optional Purchase: An additional increment of power purchased by the Sierra Nevada Region at the request of an eligible existing customer on a pass-through-cost basis. Such power will be made available as a replacement for the Base Resource that is unavailable to that existing customer due to the Sacramento Municipal Utility District's (SMUD) percentage right of 360/1,152 of the Base Resource provided for under the SMUD Settlement Agreement. The Optional Purchase will terminate on December 31, 2014.

Power: Capacity and energy.

Preference: The requirements of Reclamation law which provide that preference in the sale of Federal power be given to certain entities, such as municipalities and other public corporations or agencies and also to cooperatives and other nonprofit organizations financed in whole or in part by loans made pursuant to the Rural Electrification Act of 1936 (Reclamation Project Act of 1939, section 9(c), 43 U.S.C. 485h(c)).

Primary Marketing Area: The area which generally encompasses northern and central California extending from the Cascade Range to the Tehachapi Mountains, and west-central Nevada.

Project Use: Power as defined by Reclamation law and/or used to operate CVP and Washoe Project facilities.

Reclamation Law: Refers to a series of Federal laws with a lineage dating back to the turn of the century. Viewed as a whole, those laws create the framework under which Western markets power.

Sierra Nevada Region: The Sierra Nevada Customer Service Region of the Western Area Power Administration.

Washoe Project: A Federal water project located in the Lahontan Basin in west-central Nevada and east-central California.

Western: Western Area Power Administration, United States Department of Energy, a Federal power marketing administration responsible for marketing and transmitting of Federal power pursuant to Reclamation law and the DOE Organization Act (42 U.S.C. 7101–7352).

II. Base Resource

The Base Resource, as defined in Section I, will include CVP and Washoe Project generation supported by certain power purchases. CVP generation (energy and capacity) will vary hourly, daily, monthly, and annually, because it is subject to hydrological conditions and other constraints that may govern CVP operations. CVP generation must be adjusted for project use, maintenance, reserves, transformation losses, and certain ancillary services before CVP generation is available for marketing. The power resources will be further adjusted for transmission losses to the point of delivery. The power resources may also be adjusted for first preference customers, when first preference customers' needs increase, up to the maximum entitlement of first preference customers.

Western will market part of the 3.65 MW and estimated annual energy generation of 10,000 MWh available from the Washoe Project as part of the Base Resource. The U.S. Department of the Interior, Fish and Wildlife Service Lahontan National Fish Hatchery and Marble Bluff Fish Facility are project use loads of the Washoe Project and have first call on those power resources. The generation available after serving the Fish and Wildlife Service needs will be marketed with the CVP power resources. The Washoe Project is subject to the same variability and constraints as the CVP.

Western will also include any power available from existing power purchase contracts with terms extending beyond 2004 in the Base Resource. Currently, Western has a contract with Enron Power Marketing, Inc., that has a final termination date of December 31, 2014.

The adjustments and variables discussed above will influence the amount of Base Resource available to customers. During some critically dry months, purchases may be required to meet project use and obligations to first preference customers, and only a minimal amount of Base Resource will be available during such months. The usability of the Base Resource for meeting customers' loads will be directly related to the amount of firming provided by Western and a customer's ability to integrate this power resource into its power resource mix.

III. Products and Services

Western will market its Base Resource alone or in combination with the Optional Purchase and/or Custom Product, which could include purchasing some level of firming power on behalf of all customers, a group of customers, or individual customers. All costs incurred by Western in providing additional services to customers will be paid by those customers using the services. The degree to which Western continues to purchase power will depend on customer requests and Federal authorities. After the effective date of this Marketing Plan, Western will determine, in a collaborative process with the customers, the best use of Western's power and transmission

resources to provide the Base Resource, Optional Purchase, and Custom Products.

Each allottee will be allocated a percentage of the Base Resource. All customers will be required to commit to the Base Resource no later than December 31, 2000.

Upon request, Western will provide a qualified existing customer with the Optional Purchase. Commitments to the Optional Purchase must be made by December 31, 2000. Existing customers requesting the Optional Purchase must commit to the Optional Purchase at the time a commitment is made for the Base Resource, through December 31, 2014.

Upon request, Western may develop a Custom Product for any customer. A Custom Product may include ancillary services, reserves, etc., or may include Western purchasing additional resources, including firming power, to provide some of these services. Commitments to purchase a Custom Product must be made by December 31, 2002, for a period of no less than 5 years of service, beginning January 1, 2005. Thereafter, the Custom Product will be offered for periods as agreed to by Western.

Western may extend the commitment dates for the Base Resource, Optional Purchase, and Custom Product if Western determines it is in the best interest of Western and the customers.

Any unused power resources may be marketed under terms and conditions and for periods of time as determined by Western, and may be marketed outside the primary marketing area.

Western will establish and manage an exchange program to allow all customers to fully and efficiently use their power allocations. The exchange program will be further developed by Western through a collaborative process with all customers. Specific criteria for the exchange program will be included in electric service contracts. Any power under contract that cannot be used on a real-time basis, due to a customer's load profile, must be offered under this exchange program to Western or other preference customers.

IV. Resource Available to Existing Customers and Resource Pool Allocations

Western will allocate a portion of the Base Resource to existing customers and set aside a portion for new allocations. Effective January 1, 2015, Western will reduce all customers' allocation percentages by up to 2 percent to establish a 2015 Resource Pool. Initially, an existing customer, except first preference customers and the Sacramento Municipal Utility District (SMUD), will be allocated 96 percent of its pro rata share of the Base Resource based on the ratio of the existing customer's extension CRD to the total existing customers' extension CRD. First preference customers are subject to specific legislation and are addressed in Section VI. SMUD will have a specific allocation through 2014 based on a prior settlement agreement.

Effective January 1, 2015, Western will recalculate the percentages for all existing customers, including SMUD and customers receiving an allocation from the 2005 Resource Pool. Western will derive each customer's new percentage based on the change in SMUD's percentage described later in this section and the reduction for the 2015 Resource Pool. The new percentages will be applicable from 2015 through 2024.

A. Resource Available to Existing Customers

Existing customers, excluding SMUD, will have a right to purchase a percentage of the Base Resource based on the ratio of each existing customer's extension CRD to the total of all existing customers' extension CRD, excluding SMUD, under the terms of this section. Current extension CRD are set forth in appendix A. From 2005 through 2014, SMUD will have a right to purchase 360/1,152 of the Base Resource, as referenced in the Settlement Agreement with SMUD, Contract DE–MS65–83WP59070, dated April 15, 1983. All other existing customers have a right to purchase the Base Resource amount remaining after Western adjusts it to accommodate SMUD's rights and the 2005 Resource Pool. After 2014, Western will adjust SMUD's right to purchase the Base Resource to reflect the ratio of SMUD's extension CRD to the total of all existing customers' extension CRD. SMUD's right will also be adjusted by 4 percent (2005 Resource Pool adjustment) and up to an additional 2 percent to accommodate the 2015 Resource Pool.

Due to the diversity among existing customers' loads, including SMUD's load, existing customers' total extension CRD exceeds the 1,152 MW referenced in the SMUD Settlement Agreement. This Marketing Plan will result in SMUD receiving a proportionately greater share of the Base Resource than other existing customers if the total extension CRD remains at a level greater than 1,152 MW. Therefore, existing customers, excluding SMUD and first preference customers, have the right to request the Optional Purchase.

The following extension formulas are used to determine existing customers' purchase rights to the Base Resource. Application of these formulas also determines each existing customer's right to the Optional Purchase. No allocation percentage will be based on an extension CRD greater than an existing customer's load.

1. For the period 2005 through 2014, existing customers' purchase rights to the CVP resource are calculated as follows:

a. SMUD's purchase right = (360/1,152) × BR

b. Other existing customers' purchase rights = (A/B) × ABR

Where:

A = An individual existing customer's extension CRD. Western may adjust ''A'', if Western determines that, as of December 31, 2003, the extension CRD is greater than the existing customer's maximum monthly peak load for the previous 3 years or if the existing customer's extension CRD has been changed from the amount set forth in Appendix A of this Marketing Plan.

B = The sum of all values for ''A'', excluding SMUD.

BR = Base Resource.

ABR = Adjusted Base Resource = {BR—[(360/1,152) × BR]} × (100%—RP%). After 2014, the SMUD adjustment of [(360/1,152) × BR] will be deleted.

RP% = 2005 Resource Pool percentage.

2. Existing customers' rights to the Optional Purchase will be calculated as follows:

Individual existing customer's Optional Purchase = (A/B) × TOP

Where:

TOP = Total Optional Purchase = [(360/1,152)—(361/C)] × BR × (100%—RP%).

C = The sum of all existing customers' extension CRD, including SMUD.

B. Resource Pool Allocations

Western will reserve a portion of the power available after 2004 for allocation to eligible applicants.

1. Resource Pool Amount:

The 2005 Resource Pool consists of up to 4 percent of the power resources available after 2004. Western will also establish a 2015 Resource Pool. The 2015 Resource Pool will consist of up to 2 percent of the power resource available after 2014, plus a portion of the resource that becomes available from adjusting SMUD's percentage. That portion will be equal to what SMUD would have been required to contribute to the 2005 Resource Pool. SMUD will also be subject to the 2015 Resource Pool adjustment of up to 2 percent.

Western will, at its discretion, allocate a percentage of the 2005 Resource Pool to each applicant that meets the eligibility and allocation criteria. This allocation percentage will be multiplied by the 2005 Resource Pool percentage to determine the applicant's percentage of the Base Resource. Allocations from the 2015 Resource Pool will be determined through a separate public process conducted prior to 2015.

2. Eligibility Criteria:

Western will apply the following eligibility criteria to all applicants seeking a resource pool allocation under this Marketing Plan.

a. Applicants must meet the preference requirements of Reclamation law.

b. Applicants should be located within Sierra Nevada Region's primary marketing area. If the Sierra Nevada Region's power resources are not fully subscribed, Western may market its resource outside the primary marketing area.

c. Applicants that require power for their own use must be ready, willing, and able to receive and use Federal power. Federal power shall not be resold to others.

d. Applicants that provide retail electric service must be ready, willing, and able to receive and use the Federal power to provide electric service to their customers, not for resale to others.

e. Applicants must submit an application in response to the Call for Resource Pool Applications under a separate **Federal Register** notice.

f. Native American applicants must be a Native American tribe as defined in the Indian Self Determination Act of 1975 (25 U.S.C. 450b, as amended).

g. Existing customers may apply for a resource pool allocation if their extension CRD, set forth in Appendix A, is not more than 15 percent of their peak load in the calendar year prior to the Call for Applications, and not more than 10 MW.

h. Western will normally not allocate power to applicants with loads of less than 1 MW; however, allocations to applicants with loads which are at least 500 kW may be considered, provided the loads can be aggregated with other allottees' loads to schedule and deliver to a minimum load of 1 MW.

3. Allocation Criteria:

Western will apply the following allocation criteria to all applicants receiving a resource pool allocation under this Marketing Plan.

a. Allocations will be made in amounts as determined solely by Western in exercise of its discretion under Reclamation law and considered to be in the best interest of the U.S. Government.

b. Allocations will be based on the applicant's peak demand during the calendar year prior to the Call for Applications or the amount requested, whichever is less.

c. An allottee will have the right to purchase power from Western only upon the execution of an electric service contract between Western and the allottee, and satisfaction of all conditions in that contract.

d. All customers, including those receiving an allocation from the 2005 Resource Pool, will be subject to the 2015 Resource Pool adjustment.

e. Eligible Native American entities will receive greater consideration for an allocation of up to 65 percent of their peak load in the calendar year prior to the Call for Applications.

V. General Criteria and Contract Principles

Western will initially offer existing customers a contract amendment for the right to purchase a percentage of the Base Resource after 2004. After allocations are final, resource pool allottees will be offered a contract to set forth their allocation percentage. In order to finalize the electric service arrangements, new contracts will be offered to new and existing customers subsequent to the date product commitments are required, as set forth in this Marketing Plan. The following criteria and contract principles will apply to all contracts executed under this Marketing Plan, except that certain criteria may not apply to first preference customers' contracts and 2015 Resource Pool allottees' contracts:

A. Electric service contracts and amendments shall be executed within 6 months of a contract offer, unless otherwise agreed to in writing by Western.

B. Allocation percentages provided for in this Marketing Plan and the electric service contracts shall be subject to adjustment.

C. All power supplied by Western will be delivered pursuant to a scheduling arrangement.

D. All power will be provided on a take-or-pay basis. All costs associated with the products and services provided, including costs associated with ancillary services, Optional Purchases, Custom Products, and transmission will be passed on to the customer(s) using the product or service.

E. Contract amendments and contracts shall require a written commitment to a percentage of the Base Resource and the Optional Purchase on or before December 31, 2000, and the Custom Product on or before December 31, 2002. Western may extend the final commitment dates for the Base Resource, Custom Product, and Optional Purchase.

F. Contracts will include a clause specifying criteria that customers must meet on a continuous basis to be eligible to receive electric service from Western.

G. Upon request, Western shall provide, or assist each new and existing customer in obtaining, transmission arrangements for delivery of power marketed under this Marketing Plan; nonetheless, each entity is ultimately responsible for obtaining its own delivery arrangements to its load. Transmission service over the CVP system will be provided in accordance with Section VII of this Marketing Plan.

H. Contracts shall provide for Western to furnish electric service effective January 1, 2005, through December 31, 2024.

I. Specific products and services may be provided for periods of time as agreed to in the electric service contract.

J. Contracts shall incorporate Western's standard provisions for electric service contracts, integrated resource plans, and General Power Contract Provisions, as determined by Western.

K. Contracts will include a clause that allows Western to reduce or rescind a customer's allocation percentage, upon 90-days notice, if Western determines that (1) the customer is not using this power to serve its own loads, except as otherwise specified in Section III; or (2) the allocation amounts are consistently greater than the customer's maximum peak load.

L. Any power not under contract may be allocated at any time, at Western's sole discretion, or sold as deemed appropriate by Western.

M. Contracts will include a clause providing for Western to adjust the customers' allocation percentage for the 2015 Resource Pool.

N. Contracts may include a clause providing for alternative funding arrangements, including net billing, bill crediting, reimbursable financing, and advance payment.

VI. First Preference Entitlement and Allocation

The Trinity River Division Act and the New Melones Project provisions of the Flood Control Act of 1962 (Acts) specify that contracts for the sale and delivery of the additional electric energy, available from the CVP power system as a result of the construction of the plants authorized by these Acts and their integration into the CVP system,

shall be made in accordance with preferences expressed in Federal Reclamation laws. These Acts also provide that a first preference of up to 25 percent of the additional energy shall be given, under Reclamation law, to preference customers in the counties of origin (Trinity, Tuolumne, and Calaveras), for use in those counties, who are ready, willing, and able to enter into contracts for the energy.

To meet the requirements of the Acts, Western published the Final Withdrawal Procedures (51 FR 7702, March 5, 1986). This Marketing Plan supersedes the Final Withdrawal Procedures, or any successor procedures, as of January 1, 2005.

Western will calculate and allocate the maximum entitlements of first preference customers (MEFPC). The MEFPC is the maximum amount of energy available to first preference customers/entities, in accordance with the following:

A. The MEFPC will be calculated separately for the New Melones Project, Calaveras and Tuolumne Counties, and the Trinity River Division (TRD), Trinity County (first preference projects). To determine the 25 percent of additional energy made available to the CVP as a result of the construction of each of these projects, Western will use the average of the previous 20 years of historical annual generation. The TRD MEFPC includes generation from Trinity, Carr, and Spring Creek Powerplants and a portion of the Keswick Powerplant generation. The MEFPC will be recalculated every 5 years, with the initial recalculation pertaining to this Marketing Plan completed by June 1, 2004.

B. Upon recalculation, if the MEFPC from a first preference project is 10 percent above or below the currently effective MEFPC from that first preference project, the MEFPC will be adjusted to reflect that increase or decrease. Western will notify affected first preference customers at least 6 months before making an adjustment to the MEFPC. If recalculation reduces the MEFPC to an amount less than the load previously served, Western may, upon request and at its discretion, make purchases necessary to replace that amount of power no longer available. The costs for all such purchases made on behalf of a first preference customer will be passed on to that first preference customer.

C. An allocation made to a first preference customer/entity under this Marketing Plan will be based on the power requirements of that first preference customer/entity. The sum of allocations of first preference power, including losses, shall not exceed the MEFPC from each first preference project, or a county of origin's share of the MEFPC, except as allowed under Section VI.G below.

D. Western will work with each first preference customer/entity to identify its power requirements and the best use of its first preference entitlement. Each first preference customer/entity may elect one of the product and service options set forth below. A commitment to one of these options must be made in writing no later than December 31, 2002. If a commitment is not made by December 31, 2002, the full requirements option will be deemed chosen.

Under each option, the first preference customer will be responsible for transformation and transmission losses to the first preference customer delivery point. Transmission losses shall include losses for CVP transmission and third-party transmission.

1. *Full Requirements:* Western will provide the first preference customer with its full power requirements (capacity and energy) up to its right to the MEFPC at the Base Resource rate. If there is more than one first preference customer in a county of origin, or a first preference entity in that county makes a request for power, Western reserves the right to establish a maximum amount of power available to each first preference customer from the MEFPC. Payment under this option will be based on usage.

2. *Percentage:* Western will determine the allocation percentage in a manner similar to that of the other customers receiving a power allocation. The first preference customer's maximum demand during the previous 4 years will be used in determining an allocation percentage of the power resource under this option. Power will be provided on a take-or-pay basis under this option. The following will apply to each first preference customer selecting this percentage option.

a. First preference customers will not be subject to adjustments for the resource pool or the SMUD settlement, and will not be eligible for the Optional Purchase. Under this option, first preference customers are eligible for the Custom Product as defined in Section III.

b. The allocation percentage made available to each first preference customer under this Marketing Plan will be applied to the power resources which have been adjusted for project use.

c. First preference customers will have the opportunity to have their allocation percentage adjusted, as agreed to by Western. Increases, up to a first preference customer's share of the MEFPC, will require a written notice 7 months in advance of the first day of the month in which the increase is requested to become effective. Justification for the increase must accompany the request.

E. A first preference entity may exercise its right to use a portion of the MEFPC by providing written notice to Western at least 18 months prior to the anniversary date of the first preference project located in its county. The anniversary date is the successive fifth year anniversary of the date the Secretary of the Interior declared the availability of power from the powerplants in the counties of origin. New applications for service to begin on January 1, 2005, under this Marketing Plan must be received 18 months prior to January 1, 2002 (i.e., July 1, 2000) for Trinity County and 18 months prior to April 5, 2002 (i.e., October 5, 2000) for Calaveras and Tuolumne Counties. Other anniversary years applicable to this Marketing Plan are 2007, 2012, 2017, and 2022.

F. If the request of a first preference customer/entity for power, including adjustment for losses, is greater than the remaining MEFPC from that county's first preference project, then Western will allocate the remaining MEFPC to the first preference customer/entity first making a request for a power allocation or a justified increase in its allocation percentage.

G. Power allocated to first preference customers/entities in Tuolumne and Calaveras Counties will be subject to the following additional conditions:

1. Tuolumne and Calaveras Counties shall each be entitled to one-half of the New Melones Project MEFPC.

2. If first preference customers in either Tuolumne County or Calaveras County are not using their county's full one-half share, and a first preference customer/entity in the other county requests power in an amount exceeding that county's one-half share, then Western will allocate the unused power, on a withdrawable basis, to the requesting first preference customer/entity. Such power may be withdrawn for use by a first preference customer/entity in the county not using its full one-half share upon 6-months written notice from Western.

H. Trinity Public Utilities District is currently the sole recipient of the TRD's first preference rights.

I. Transmission service will be provided in accordance with applicable laws and Section VII of this Marketing Plan.

J. For planning purposes, first preference customers may be required to provide forecasts and other information required by Western as set forth in the electric service contract.

K. The general criteria and contract principles set forth in Sections V.A through C, F through L, and N of this Marketing Plan will apply to first preference customers.

VII. Transmission Service

Western will provide bundled or unbundled transmission services as appropriate in conjunction with its power sales in a manner consistent with FERC Orders, legislated mandates, or California ISO Agreements, as appropriate. Western will determine the use of its transmission resources concurrently with further development of the products and services under this Marketing Plan. Specific terms and conditions for transmission will be provided for in future service agreements.

Dated: June 10, 1999.

Michael S. Hacskaylo,

Administrator.

Appendix A

This Appendix lists the existing customers' CRD amounts and extension percentages as of May 1, 1999. Final percentages will be available after December 31, 2003.

Existing customers	CRD [1] (kW)	Extension CRD (CRD [1 2] less excluded types of power) [3] (kW)	Percentage of base resource (2005–2014)
Air Force—Beale	21,575	21,575	1.42461
Air Force—McClellan [4]	12,000	12,000	0.79237
Air Force—Onizuka [4]	1,500	1,500	0.09905
Air Force—Travis	12,651	12,651	0.83535
Air Force—Travis/David Grant Medical Center [4]	4,000	4,000	0.26412
Air Force—Travis Wherry Housing	1,400	1,400	0.09244
Alameda, City of [5]	21,145	21,145	1.39622
Arvin-Edison Water Storage District	30,000	30,000	1.98092
Avenal, City of	622	622	0.04107
Banta-Carbona Irrigation District	3,700	3,700	0.24431
Bay Area Rapid Transit District	4,000	4,000	0.26412
Biggs, City of	4,200	4,200	0.27733
Broadview Water District	500	500	0.03302
Byron-Bethany Irrigation District	2,200	2,200	0.14527
Calaveras Public Power Agency	8,000	.....	.....
California State University, Sacramento—Nimbus	40	40	0.00264
Cawelo Water District	500	500	0.03302
Corrections—California State Prison—Sacramento	2,300	2,300	0.15187
Corrections—Deuel Vocational Institute	1,700	1,700	0.11225
Corrections—Northern California Youth Center	1,700	1,700	0.11225
Corrections—Sierra Conservation Center	3,000	.....	.....
Corrections—Vacaville Medical Facility	1,800	1,800	0.11886
Defense Logistics Agency—Sharpe Facility	4,000	4,000	0.26412
Defense Logistics Agency—Tracy Facility	3,800	3,800	0.25092
East Bay Municipal Utility District [5]	1,965	1,965	0.12975
East Contra Costa Irrigation District	2,500	2,500	0.16508
Eastside Power Authority [5]	2,961	2,961	0.19552
Energy—Lawrence Berkeley National Laboratory	9,000	9,000	0.59428
Energy—Lawrence Livermore National Laboratory	44,711	44,711	2.95229
Energy—Lawrence Livermore, Site 300	2,000	2,000	0.13206
Energy—Stanford Linear Accelerator Center	21,903	12,903	0.85199
Glenn-Colusa Irrigation District	3,343	3,343	0.22074
Gridley, City of	9,400	9,400	0.62069
Healdsburg, City of [5]	3,241	3,241	0.21401
James Irrigation District [5]	987	987	0.06517
Kern-Tulare Water District [5]	987	987	0.06517
Lassen Municipal Utility District	3,000	3,000	0.19809
Lodi, City of [5]	13,236	13,236	0.87398
Lompoc, City of [5]	5,197	5,197	0.34316
Lower Tule River Irrigation District [5]	1,965	1,965	0.12975
Merced Irrigation District [4]	5,000	5,000	0.33015
Modesto Irrigation District [5]	10,805	10,805	0.71346
NASA—Ames Research Center	80,000	80,000	5.28245
NASA—Moffett Federal Airfield [4]	5,009	5,009	0.33075
Navy—Naval Weapons Station, Concord [4]	2,898	2,898	0.19136
Navy—Naval Radio Station, Dixon	915	915	0.06042
Navy—Naval Air Station, Lemoore [4]	23,000	23,000	1.51870
Navy—Naval Communications Station, Stockton	3,700	3,700	0.24431
Oakland Army Base	2,275	2,275	0.15022
Oakland, Port of [4]	1,000	1,000	0.06603
Palo Alto, City of	175,000	175,000	11.55535
Parks & Recreation, California Department of	100	100	0.00660
Parks Reserve Forces Training Area	500	500	0.03302
Patterson Water District	2,000	2,000	0.13206
Pittsburg Power Company [4]	5,000	5,000	0.33015
Plumas-Sierra Rural Electric Cooperative	25,000	25,000	1.65076

Existing customers	CRD [1] (kW)	Extension CRD (CRD [1 2] less excluded types of power) [3] (kW)	Percentage of base resource (2005–2014)
Provident Irrigation District	750	750	0.04952
Rag Gulch Water District	500	500	0.03302
Reclamation District 2035	1,600	1,600	0.10565
Redding, City of	116,000	116,000	7.65955
Roseville, City of	69,000	69,000	4.55611
Sacramento Municipal Utility District [7]	361,000	361,000	31.25000
Sacramento Municipal Utility District	100,000	.....	.....
San Francisco, City and County of [4]	2,600	2,600	0.17168
San Juan Water District	1,000	1,000	0.06603
San Luis Water District	6,650	6,650	0.43910
Santa Clara Valley Water District [5]	987	987	0.06517
Shasta Lake, City of	11,450	11,450	0.75605
Silicon Valley Power	216,532	136,532	9.01529
Sonoma County Water Agency	1,500	1,500	0.09905
Trinity Public Utilities District	17,000	.....	.....
Tuolumne Public Power Agency	7,000	.....	.....
Turlock Irrigation District [5]	3,941	3,941	0.26023
Ukiah, City of [5]	8,773	8,773	0.57929
University of California, Davis	14,682	14,682	0.96946
West Side Irrigation District	2,000	2,000	0.13206
West Stanislaus Irrigation District	5,200	5,200	0.34336
Westlands Water District [5]	21,441	21,441	1.41576
2005 Resource Pool [6]	.....	.....	2.75000
Total	1,584,537	1,360,537	100.00000

Notes:

[1] CRD temporarily laid off and temporarily allocated to other existing customers is reflected in this Appendix A, under both CRD and extension CRD, as being returned to the existing customer who received the original allocation.

[2] Western will reduce the extension CRD if Western determines that, as of December 31, 2003, the extension CRD is greater than the existing customer's load.

[3] Exclusions are diversity, curtailable, and first preference power; and peaking and excess capacity.

[4] These extension CRD could be adjusted as a result of the NDA Act procedures. Also, new NDA Act customers could be added through November 30, 2003.

[5] Westlands Water District has a right to 50 MW through December 31, 2004. Certain existing customers have been allocated a portion of the 50 MW, subject to withdrawal for use by Westlands Water District. Allocation percentages effective after December 31, 2004, will be adjusted to reflect changes made as a result of Westlands Water District's use and withdrawals, in accordance with Section IV.A.1.b.

[6] The 4 percent 2005 Resource Pool is adjusted for SMUD's non-participation due to the Settlement Agreement.

[7] 31.25 percent reflects the 360/1,152 ratio in the SMUD Settlement Agreement. After December 31, 2014, SMUD's percentage will be based on its extension CRD.

[FR Doc. 99–16018 Filed 6–24–99; 8:45 am]

BILLING CODE 6450–01–P

DEPARTMENT OF ENERGY

Western Area Power Administration

Power Allocation Issues

AGENCY: Western Area Power Administration, DOE.

ACTION: Notice of inquiry.

SUMMARY: The Western Area Power Administration (Western) has completed its inquiry regarding the impact of electric utility industry restructuring on Western's power allocation policies. This **Federal Register** (FR) notice contains Western's responses to comments on the issues raised by the inquiry. Contemporaneously, Western is publishing the final 2004 Power Marketing Plan for the Sierra Nevada Customer Service Region (SNR) and the final Salt Lake City Area Integrated Projects (SLCA/IP) Marketing Criteria.

FOR FURTHER INFORMATION CONTACT:

Robert C. Fullerton, Project Manager, Corporate Services Office, Western Area Power Administration, 1627 Cole Boulevard, PO Box 3402, Golden, CO 80401–0098, telephone (303) 275–2700, email: fullerto@wapa.gov.

Joel K. Bladow, Regional Manager, Rocky Mountain Region, Western Area Power Administration, PO Box 3700, Loveland, CO 80539–3003, telephone (970) 490–7201, email: bladow@wapa.gov.

J. Tyler Carlson, Regional Manager, Desert Southwest Region, Western Area Power Administration, PO Box 6457, Phoenix, AZ 85005–6457, telephone (602) 352–2453, email: carlson@wapa.gov.

David Sabo, Customer Service Center Manager, Colorado River Storage Project, Western Area Power Administration, PO Box 11606, Salt Lake City, UT 84147–0606, telephone (801) 524–6372, email: sabo@wapa.gov.

Jerry W. Toenyes, Regional Manager, Sierra Nevada Region, Western Area Power Administration, 114 Parkshore Drive, Folsom, CA 95630–4710, telephone (916) 353–4418, email: toenyes@wapa.gov.

Gerald C. Wegner, Regional Manager, Upper Great Plains Region, Western Area Power Administration, PO Box 35800, Billings, MT 59107–5800, telephone (406) 247–7405, email: wegner@wapa.gov.

SUPPLEMENTARY INFORMATION:

Authorities

This public process is being conducted pursuant to the Department of Energy (DOE) Organization Act (42 U.S.C. 7101, *et seq.*); the Reclamation Act of 1902 (43 U.S.C. 371, *et seq.*), as amended and supplemented by subsequent enactments, particularly section 9(c) of the Reclamation Project Act of 1939 (43 U.S.C. 485h(c)); and

other acts specifically applicable to the projects involved.

Background

Western is a Federal power marketing administration (PMA), charged with the responsibility of marketing electricity generated by power plants operated by the Bureau of Reclamation (Reclamation), the Corps of Engineers, and the International Boundary and Water Commission. Created in 1977, Western markets on a wholesale basis and transmits Federal hydroelectric power throughout 1.3 million square miles to more than 600 customers, including rural electric cooperatives, municipal utilities, public utility districts, Federal and State agencies, irrigation districts, and Native American tribes. Western's power customers, in turn, provide service to millions of consumers in 15 western States.

Western markets power on a project-specific basis. A marketing plan for each project is developed through a public process, with opportunity for comment on a marketing proposal before publication of the final marketing plan in the **Federal Register**. Reclamation law governs how Western markets electricity, including the requirement that Western offer power first to certain nonprofit entities such as rural electric cooperatives and municipalities.

On December 1, 1998, Western published in the **Federal Register** a Notice of Inquiry to explore the impact of electric utility industry restructuring on Western's power allocation policies (63 FR 66166). A forum was held in Denver on January 6, 1999, to receive public comment on this matter, and written comments were accepted from the public until the end of the 45-day consultation and comment period. In this **Federal Register** notice, Western is addressing comments received during the electric utility industry restructuring inquiry.

Western received a number of comments on the size of project-specific resource pools in response to our Notice of Inquiry. Because of these comments and expressions of interest in an allocation of Federal power from several Indian tribes, Western decided to open an additional 30-day comment period focused solely on the issue of the size of project-specific resource pools. Informational meetings on Western's resource pool size proposals and the requirements for receiving an allocation of power were held in Phoenix, Arizona, Albuquerque, New Mexico and Folsom, California. Resource pool size comments are being addressed in the 2004 marketing plans for the Central Valley, Washoe, and Salt Lake City Area Integrated Projects.

As some comments and responses use certain project names interchangeably, some definition is needed in order to avoid confusion. Western's 2004 Power Marketing Plan for the Sierra Nevada Customer Service Region governs marketing from the Central Valley Project (CVP) and the Washoe Project. Western's Salt Lake City Area Integrated Projects Marketing Criteria cover power marketing from the Colorado River Storage Project (CRSP), the Collbran Project, and the Rio Grande Project.

Summary of Western's Response to the Notice of Inquiry

In response to changes in the utility industry, Western's power allocation policies have been altered in a responsible and proactive manner. More flexibility has been added to Western's power sales contracts, and Western has made significant changes to our marketing policies that emphasize customer choice and diminish Western's future need for appropriations to purchase power. Western's contracts will accommodate, rather than impede, environmentally beneficial changes in operations at large Federal dams in the west. Widespread benefit will be achieved through power allocations to Native American tribes without the need for formation of tribal utilities. Contractual provisions will continue to prohibit inappropriate resale of Western's power and assure that consumers receive the benefits of cost-based Federal hydroelectricity. Although no additional changes to Western's power marketing policies will be adopted at this time, Western likely will evaluate the impact of electric utility industry restructuring on a periodic basis to assure that our policies continue to be responsive to public needs.

Legal Analysis

Regulatory Flexibility Analysis

The Regulatory Flexibility Act of 1980 (5 U.S.C. 601, *et seq.*) requires Federal agencies to perform a regulatory flexibility analysis if a final rule is likely to have a significant economic impact on a substantial number of small entities and there is a legal requirement to issue a general notice of proposed rulemaking. Western has determined that this action does not require a regulatory flexibility analysis since it is a policy inquiry rather than a rulemaking, and the subject of the inquiry involves policies applicable to public property.

Environmental Compliance

DOE National Environmental Policy Act (NEPA) regulations categorically exclude marketing plans from NEPA documentation unless they involve new generation, new transmission, or a change in operations. Therefore, Western will not conduct further evaluation under NEPA as part of this power allocation issues notice of inquiry. Considerable environmental evaluation has already occurred under the Energy Planning and Management Program (EPAMP) and during project-specific marketing plan development.

Review Under Paperwork Reduction Act

As no collection of information will take place as a result of this **Federal Register** notice, no review under the Paperwork Reduction Act of 1980 (44 U.S.C. 3501, *et seq.*) is necessary.

Review Under Executive Order 12866

Western has an exemption from centralized regulatory review under Executive Order 12866; accordingly, no clearance of this notice by the Office of Management and Budget is required.

Small Business Regulatory Enforcement Fairness Act

Western has determined that this **Federal Register** notice is exempt from congressional notification requirements under 5 U.S.C. 801 because it is a policy inquiry rather than a rulemaking, and the subject of the inquiry involves procedures and policies applicable to public property.

Federalism Assessment

This **Federal Register** notice will not have substantial direct effects on the States, on the relationship between the national government and the States, or on the distribution of power and responsibilities among the various levels of government. Therefore, in accordance with Executive Orders 12612 and 13083, it is determined that this notice does not have sufficient federalism implications to warrant the preparation of a Federalism Assessment.

Response to Comments on Notice of Inquiry

Western has received extensive public comment on the impact of electric utility industry restructuring on Western's power allocation policies. These comments relate to six questions that were posed during the public process, which address the impact of State retail competition statutes on how we sell electricity. Public comments, and Western's responses to those comments, are set forth below and

organized under each of the six questions.

Question

1. Should Western's power allocations system, including the term of firm power contract renewals, be modified to take into account changes in electricity markets that have occurred, and are expected to occur in the future, due to the enactment of California Assembly Bill 1890 and other State retail competition statutes? If so, please explain what modifications would be desirable. If not, please explain why the present system should be preserved.

A. Goals of Restructuring

Comment: The intended goal of electric utility restructuring is to promote competition, so as to lower power costs to the consumer. That goal is already being met by Western's existing power allocation system. Loss of the resource will increase costs to and punish the retail consumer, a result that is contrary to the intended results of retail competition.

Response: Lower power cost to consumers is the ultimate goal of utility restructuring. Western's power allocations promote yardstick competition in the electricity industry and result in lower power costs to the consumers served by Western's customers.

B. Federalism

Comments: Western should give a great deal of deference to federalism. Many of the suggested changes in Western's Notice of Inquiry would insert Western into State policy determinations. To date, the United States Congress has been extremely careful in respecting State jurisdiction in matters as extensive and complex as those within the power industry. Western should not tread where Congress has chosen not to go.

We appreciate your efforts to assure that the Federal power program's policies are contemporaneous with the needs of customers and the changes in the industry. However, we do not believe that the six issues posed in this inquiry will strengthen the program or increase the value of the Federal power resources. We believe these issues should be addressed at the State level.

Response: Issues of retail service, retail rates and consumer choice in power supply have been addressed at the State and local levels in the past. As Congress has not identified what Federal purpose would be served by modification of this historic responsibility, Western believes these issues are better addressed at the State level. The Clinton Administration's electric utility restructuring bill encourages States to take the lead on these issues.

Comment: Why should the Federal policy on power allocations be changed due to State legislative action? State interests should not supersede Federal interests.

Response: As a matter of policy and practicality, Western views the establishment of Federal policy through mirroring of State legislative or regulatory action as problematic.

Comment: Western should not interfere with the federalism that has served our nation well in accommodating the different needs of each region.

Response: Accommodating regional needs is important to Western. As a PMA, our mission is very much regional in nature. Western markets power on a project-specific basis, which allows the crafting of marketing plans that are responsive to regional needs.

Comment: We understand that the Clinton Administration supports State implementation of electric utility restructuring, and we are concerned that Western not impose requirements beyond those required by California law.

Response: Western has no desire to impose requirements beyond those required by California law.

C. Policy Diversity

Comments: Retail access has not been uniformly implemented among the States in Western's service territory. Retail access and utility restructuring are being addressed to varying degrees on varying timetables. Restructuring is an evolutionary process and substantial discretion is left to each State to determine how best to serve their interests.

Because of the wide variety of approaches being considered or implemented by the various States in which Western currently has responsibility for marketing Federal resources, it will be impossible for Western to have a uniform or equitable approach in each jurisdiction, even setting aside the issue of Federal/State relationships.

The States should mold their restructuring plans around Western rather than Western trying to mold their allocation system around each State.

Response: Western agrees that adopting a policy that mirrors evolving State action would be difficult.

Comment: No modification should take place in Western's power allocations to satisfy the needs created by California's electric deregulation.

Response: Western does not intend to force California standards on customers elsewhere in our service territory.

Comment: Western should not set national standards for all of its projects. The regional nature of Western's projects should be recognized.

Response: Western will continue to market power on a project-specific basis, in a manner that is sensitive to regional needs.

D. Yardstick Competition or Distortion of Markets?

Comments: Western's current allocation system should be changed because competitive wholesale and retail electricity markets make the inherent market distortions caused by PMA power even greater. It is patently unfair for the Federal Government to subsidize a few select players in a competitive market, to be picking winners and losers among electricity suppliers.

Western's power allocation system should be modified to take into account industry changes. Under the current scheme, the Federal Government is essentially stacking the deck against private, taxpaying utilities and other power generators in favor of subsidized customers who provide low cost power to a select few. Because the wholesale market today is already competitive, such a stacking of the deck is incongruous with the nation's goals as set forth in the Energy Policy Act of 1992.

Response: Marketing of Federal hydropower to nonprofit public bodies first is in accordance with law. Although many changes have taken place in the utility industry in recent years, the policy of not allowing profit to be made on Federal power resources constructed with taxpayer dollars remains relevant today.

All successful competitors in the electricity marketplace have certain competitive advantages, including investor-owned utilities. Some investor-owned utilities (IOUs) have such attributes as size, access to capital, economies of scale, greater customer density, use of investment tax credits, access to tax-exempt bonds for purposes such as financing pollution control equipment, and favorable tax treatment of depreciation. Some jurisdictions allow recovery of stranded costs on favorable terms for IOUs.

Comments: One of the original intents of the Federal power program was and still is to provide a yardstick to measure competition and provide a counterbalance to private sector interests. At this time of restructuring and volatile wholesale prices,

abandoning that yardstick will leave consumer-owned electric utilities and their consumers no means of assessing the conditions of the marketplace.

Equity and a level playing field for all types of utilities clearly points to a prompt renewal of CVP and CRSP contracts under the 2004 marketing plans at high percentage levels.

Western's allocation policies have helped promote ''yardstick'' competition among utility suppliers. Existing allocation policies have in large part supported the continued ability of our small municipal utility systems to provide competitively priced power to all our consumers, not just a few of the larger consumers as we believe will be the inevitable result if industry restructuring is mandated at the Federal or State level.

A recommitment to the original purposes of the Federal power program will better serve the country and Western's customers. The need for a yardstick to measure competition is more important than ever. There has yet to be a demonstration that industry restructuring will benefit all consumers. Developments in industry restructuring to date have only benefited a narrow class of customers-large industrial and commercial loads. Small communities and rural areas—Western's customer base—may be distinctly disadvantaged by some of the industry changes that have been proposed.

Response: Western's power allocation policies preserve stability and competitive balance in the utility business. As small communities and rural areas are served by a significant portion of our customer base, Western is cautious about changing its policies to the possible detriment of consumers in less populated areas.

E. Policy Basis

Comments: Western would be grossly premature in making changes to address nonexistent or moving targets in restructuring. In addition, the form of the present California market is undergoing rapid and unpredictable changes. To modify the present 2004 marketing plan would be a futile exercise.

Modifying Western's power allocation system based on possible developments in State legislatures is conjectural and represents a bad model for policy development. There is no reason to change Western's power allocation system because of development in the States. State actions do not compromise Western's role in the electric utility industry, and in fact may make Western's role more important.

Western should not take into account changes it expects to occur because of State statutes allowing retail competition. Some States will not adopt statutes and the statutes that are adopted will not be the same. Speculation on what the future may hold is not a sound business practice.

Any initiative which results in Western reducing power allocations on the speculative assumption that industry restructuring will be mandated in our State or that it will be good for all consumers in our State simply exacerbates the seriousness of the resource stability issue that small municipal utilities are vitally concerned about.

Response: The scope and pace of changes in the utility industry cannot be predicted with certainty. Adopting significant additional policy changes today, when the policy debate is fluid and the outcome is far from certain, is imprudent.

Comment: Changing Western's power allocation policies as suggested by the question will impede competition and not promote it. The current merger mania is being fueled by the debate on industry restructuring. Investor-owned utilities realize that maximizing profits in restructured markets is dependent on their ability to increase market share. Any action by Western that detrimentally impacts the ability of small municipal and rural-based systems to survive and continue to offer first-rate service at a competitive price will lead to increased concentration of electric supply in the hands of a few, larger companies. This does not foster competition, it discourages it. Confirmation of existing policies and extension of resources will promote and preserve competition in electric supply markets.

Response: Yardstick competition has added value to the electricity marketplace. Competition is not served if Western adopts policies that undermine the diversity of the industry by accelerating the consolidation of power supply.

Comment: Notwithstanding our belief that Federal law would need to be changed, we do not believe the policy changes suggested by these questions are prudent on their face. In general, these policies would add both instability to and disrupt what is already much uncertainty related to the future of power supply resources in a time of deregulation.

Response: Adding instability and disruption to power supply resources is not sound policy.

Comment: Policy decisions on Western's power should not be made in a vacuum. Western's policies should be examined in light of other Federal actions which affect the electric utility industry.

Response: Many public power entities do not purchase power from Western, so changes in Western's allocation policies have a limited impact nationally.

Comment: The customers who purchase power from the Southeastern Power Administration are concerned that DOE would modify the policies governing the Federal power program to accommodate nascent changes in retail utility markets in a handful of States. We are unaware of any evidence that the Federal power program has impeded implementation of retail competition.

Response: Western believes that the sale of cost-based hydropower to not-for-profit utilities aids competition in the industry. Far from undermining competition, diversity of participation stimulates and strengthens the marketplace.

Comment: The world has changed since the adoption of the Energy Planning and Management Program in 1995. Modest changes to the rules would meet the need to address retail wheeling.

Response: Western believes that the changes to its past marketing and allocation policies, as set forth in the 2004 marketing plans for the CVP, Washoe, and SLCA/IP, are responsive to changes in the utility industry.

Comments: Western's Notice of Inquiry has the appearance of searching for a rationale or justification for changing policy.

We were disappointed to receive the inquiry from Western, as it seems to be just another attack on public power cloaked in the shroud of industry restructuring. The questions overlook the fact that public power and the historical distribution of Western power have fostered more competition than will likely occur from restructuring.

Response: Western agrees that public power and the marketing of power by Western have promoted competition in the past, to the benefit of consumers.

Comments: Western should change its allocation policies, as the original purpose for preference allocations has changed, and the West has been electrified. Restructuring demands changes to the existing allocation scheme.

The PMAs and Tennessee Valley Authority were originally established during the Great Depression to speed the delivery of electricity to farms and rural areas and to service municipal utilities. Only 11 percent of rural citizens were receiving the benefits of electric service at that time. Virtually no

competition existed among utilities. At that time, IOUs were unable to finance rural electrification because of the lack of available capital at affordable rates.

Cost-based PMA power was reserved first for preference entities, with subsidies seen as tools for promoting economic development. Economic circumstances in many of these areas have improved dramatically and the original reasons for creating such subsidized sales of power no longer exist. Rural America is no longer without electricity, nor is rural America any poorer than urban America.

Congress established the current allocation system based on the diversity in electric markets, the cost of owning, operating and maintaining electric facilities, and the need for the region to access affordable electric energy. The basis for that decision is as valid today as when the lights first came on. Electric utility restructuring will provide little benefit to remote, sparsely populated, and economically depressed rural areas. The lack of economic activity, which initially served as a vital deterrent to conventional electric utility development, is more pervasive today than it was when rural areas were first evaluated as potential markets for electric energy.

Response: Although electrification of rural America has been largely accomplished, it is not universal. For example, Western has received comments during this public process that thousands of residents on the Navajo Reservation in northern Arizona do not have electrical service.

As is the case with every utility in the United States, consumers in Western's service territory vary in their prosperity. Many of Western's customers serve areas that are economically depressed. Allocations of Western power are important to economic development in those regions.

Comment: Western and the other PMAs are in need of an overhaul. America's needs are different today than they were at the time historic Reclamation laws were enacted. While the burdens of Federal preference allocations continue to be shared by all, the benefits appear to flow only to a few. At a time when both government and industry are trying to do more with less, it is difficult to find the public interest in a program where the electricity bills of one select group of citizens are subsidized to the exclusion of others. At a time when energy conservation has never been more important, it is difficult to find the public interest in a scheme where the United States sells electricity at below market rates, thereby encouraging inefficient use, waste and unnecessary adverse impacts to our country's natural resources. And at a time in which the Congress has mandated wholesale competition of electricity and functional unbundling of generation and transmission, it is difficult to find the public interest in a program that depends on vertical integration to support its continuation.

Response: As a regional PMA, the economic benefit of the power sold by Western is enjoyed by entities in the region. This is not a unique situation. The economic benefit of other Federal programs is often also regional in scope, whether the investment is in military bases, mass transit, national parks, or locks and dams that promote commerce on the Nation's rivers.

Western is doing more with less. Our staffing levels have been cut 25 percent over the last several years in order to assure that our power rates remain stable and our goods and services remain marketable. Moreover, Western's rates are not subsidized. Western markets cost-based hydroelectric resources, which are relatively inflation resistant as compared to non-hydro generation due to the absence of fuel costs. In addition, Western has no responsibility to meet load growth with relatively expensive additional power. Western's hydropower resources are reasonably priced due to these factors, and not because of subsidies.

Western is proud of its record, and the record of its customers, in conservation and renewable resources. According to the annual reports from customers pursuant to Western's Integrated Resource Planning (IRP) regulations, Western's customers avoided in 1998 the equivalent of over 555 megawatts (MW) of supply side resource acquisition due to investment in demand-side management. Also in 1998, over 1140 MW of renewable resources were acquired by customers.

The Federal power program does not depend on continuation of vertical integration. For those customers that embrace separation of functions, Western will market its power to the function responsible for service to retail consumers. Yardstick competition will continue to play an important role in enhancing competition in the marketplace, with the goal of lowering rates to all consumers.

Comment: We are concerned that any significant changes to Western's 2004 marketing plan may increase uncertainty at a critical time and lead to increasing government bureaucracy. Changes to Western's existing power allocation system would likely decrease allocations to existing customers and cause power rates to consumers served by Western's customers to rise. Higher electric rates are contrary to the goals of retail competition.

Response: Western is committed to carrying out its mission in a businesslike and cost conscious manner. Creation of a government bureaucracy which adds no value to our programs is inappropriate and puts upward pressure on Western's rates.

F. Western's Role

Comments: Western has already demonstrated and continues to work to adapt both its organization and the renewals it is making on contracts for Federal power, recognizing changes in the industry while at the same time preserving and respecting its Federally mandated mission.

Western's marketing policies are keeping pace with industry restructuring. The extensive public process utilized by Western to develop marketing policy has served its purpose very well.

We feel that the present 2004 CVP marketing plan is the logical evolution of several predecessor marketing plans. With each stage of the evolution, the Western system has gained the flexibility which was sorely needed.

Western's marketing plans already have provisions to adapt Western to the new marketplace. For example, the CVP 2004 marketing plan offers unbundled services and allows customers to choose what they need. The marketing plan is optimized for who Western is and the role they play in the marketplace.

Western is already responding to industry changes as a wholesale power supplier. By separating its transmission function from its power marketing function, posting its surplus transmission on an open access same time information system site, and participating on the California Independent System Operator (ISO) governing board, Western has demonstrated its forward looking approach.

Electricity restructuring is an evolutionary process that will take many years to complete, and the eventual outcome is uncertain. Western has taken into account industry restructuring changes in its proposed marketing plans, which would sell a significantly different resource from what is marketed today.

Western's power allocation system should be retained in order to preserve consistency between the past and the future.

Response: Continuation of past policies without taking into account changes in the utility industry is

unwise. Western agrees there is risk in predicting the future actions of Congress, State legislatures, and regulators. However, there is also risk in not adjusting business practices until there is absolute certainty.

Western has taken significant steps to respond to industry changes. Even though Western is not under the jurisdiction of FERC for this purpose, functional separation of its merchant and reliability functions has proceeded. Western is actively involved in the formation of independent system operators, and has taken on the roles of security coordination in the Rocky Mountain subregion of the Western Systems Coordinating Council and schedule coordination in northern California. Open access transmission rates and rates for ancillary services have been developed. Western has also pursued efficiencies in its operations and cut its staffing level and associated costs in order to assure that our rates are stable and our power remains marketable. Western is committed to being businesslike and responding to the changes in the utility industry in a responsible and proactive manner.

In recent years, Western has added more flexibility to its power marketing policies and power sales contracts than has existed in the past. Contracts recently signed for the Pick-Sloan Missouri Basin Program-Eastern Division and the Loveland Area Projects contain withdrawal opportunities at 5 and 10 years to meet the needs of potential new customers and other purposes as determined by Western. Western also reserved the contractual ability to adjust power commitments in response to changes in operations and hydrology. In addition, Western has the full flexibility to adjust its power rates under the terms of the contracts. Resource pools of up to 6 percent of the marketable resource were set aside to meet the needs of new customers, including Indian tribes. These changes demonstrate Western's commitment to adjusting its marketing policies as changes take place in the utility industry.

Western has also made significant additional changes in the way power is marketed in its most recent marketing plans. Under the 2004 Power Marketing Plan for the SNR, Western will no longer market a resource that anticipates significant purchasing of power to meet contractual commitments. Instead, Western plans to market the hydroelectric resource as a base resource, which can be enhanced by custom products (such as firming power and ancillary services) at the election of the customer. Similarly, the marketing plan for the SLCA/IP will allow the customer to choose whether Western should purchase firming power. These changes promote customer choice and will significantly impact Western's future need for purchase power appropriations.

Comments: Western appears to be pursuing a course of promoting retail wheeling indirectly even though its sister Federal agency, the Federal Energy Regulatory Commission, has been prohibited by Congress from pursuing this course directly in section 212(h) of the Federal Power Act.

The questions posed by Western appear to be predicated on assumptions that it has a broad regulatory and legislative authority and that the impacts of its decisions will be limited. Neither predicate is accurate. Western's authority is not one of a regulator, but of a marketer with limited authority.

Do not lose sight of Western's limited statutory role. Investor-owned utilities and marketers would undoubtedly oppose a shift in mission from a wholesale supplier to a retail utility.

Industry changes do not justify a more ''activist'' role for the PMAs. A more active role runs counter to the belief that exists in the Pacific Northwest, where the four governors engaged in a comprehensive regional review of the future role of the Bonneville Power Administration (BPA). The regional review rejected the notion of a more activist BPA, and made several recommendations to limit the role of BPA, including a preclusion of direct retail sales beyond existing direct service customers.

Expanding Western's role to include direct retail sales, rate regulatory review of consumer-owned utilities and load profile analysis is unnecessary and inconsistent with the desired reduction in the role of the PMAs in a competitive marketplace.

Affirmative answers to the six questions would launch Western into activities that vastly exceed its statutory authority. In the past, Congress has been clear when it directs an expansion of Western's role beyond that of a wholesale supplier (such as the IRP) requirement for Western customers. Congress has not directed Western to take on the role suggested in the Notice of Inquiry. While BPA has statutory responsibilities that are greater than Western's, BPA cannot undertake many of the activities contemplated by the Notice. Moreover, the Public Power Council would oppose BPA attempting to engage in such activities.

We believe Western's function is for the benefit of the region it serves. Restructuring along the lines of this Notice of Inquiry could lead Western to operate outside its boundaries to the detriment of existing customers and perhaps even create a situation where Federal agency competes with Federal agency. Western's current responsibilities for supplying power take into account a number of State and regional issues dealing with power, but also extend beyond power delivery to other resource issues such as water management and impacts on the environment.

Response: Western is persuaded by these comments, and will not change its general role in the manner suggested by the Allocation Issues Inquiry. Although Western has broad statutory authority, there is no compelling policy rationale for Western to become more activist in its role. The goal of the Clinton Administration, which is to have a smaller government that works better and costs less, would be undercut if Western adopts the wide ranging new responsibilities suggested by the Inquiry.

Comment: Western should not build resources.

Response: Western has no plans to construct new power resources.

Comments: Federal power is marketed in accordance with Reclamation law. Consequently, the allocation and rate-setting policies of Western are not identical to the practices of other electric utilities. Federal Reclamation projects were developed not as a means for the generation of electricity, but as a means of generating revenues to repay Federal investment in these projects, including irrigation assistance.

Multipurpose Federal project operation is unique as compared to other resources that have more flexibility in a competitive power market to meet individual loads.

Response: Western has less flexibility than other participants in the competitive marketplace due to the multipurpose nature of the resources we market. Western agrees that our role is to market power in such a manner as to repay Federal investment.

Comment: As an agency of the Federal Government, Western is not subject to deregulation rules promulgated by the FERC. Nor is Western subject to the jurisdiction of State legislatures or public utility commissions.

Response: Although the Clinton Administration's restructuring bill would make Western's transmission rates subject to FERC review as a matter of law, Western is not a public utility and therefore is not presently subject to FERC jurisdiction under section 205 and section 206 of the Federal Power Act. However, as a transmitting utility,

Western is subject to sections 211–213 of the Federal Power Act. Western is not subject to the jurisdiction of State legislatures or public utility commissions.

G. Customer Support, Leadership and Reliance

Comment: The Natural Resources Defense Council (NRDC) applauds the good stewardship example that has been set by northern California customers of the Central Valley Project. In our judgment, that record justifies both renewal of these customers' contracts and your insistence that other customers meet the same high standard in return for contract extensions.

In an increasingly competitive and environmentally constrained industry, access to inexpensive power supplies should be limited to distribution companies that make convincing commitments to use electricity efficiently and to expand inventories of relatively benign production. This is precisely what we have seen from the Sacramento Municipal Utility District (SMUD), City of Redding Electric Department, Silicon Valley Power, City of Palo Alto Department of Utilities, and the Northern California Power Agency. These institutions have made three overriding commitments: (1) Through 2001 at least, they will devote at least 3 percent of retail electric revenues to long-term investments in energy efficiency, renewable energy, and low-income energy services; (2) after 2001, they will at least match California investor-owned utilities' investments in these categories as a fraction of retail sales; and (3) they will annually underwrite and publish independent experts' reviews of all such investments. Those commitments place these northern California institutions in the forefront of public power nationally and amply justify a contract extension.

Response: Western appreciates the support of the SNR 2004 marketing plan by NRDC.

Comment: Central Valley Project customers have paid for substantial environmental restoration on the CVP. Moreover, the consumer-owned municipal utilities served by the CVP have paid more than $20 million to repair and upgrade the Federally owned power generating facilities (including the funding of the Shasta temperature control device, the Shasta rewind project, and CVP maintenance) to ensure their continued reliability and value without the need for Federal appropriations. The availability of this resource has been vital to the implementation of many cutting edge environmental improvements that currently benefit the citizens of California.

Response: Western agrees that CVP customers have paid for substantial environmental restoration and improvement in northern California. The 2004 marketing plan provides stability in the collection of mitigation funds for the benefit of environmental resources in California's Central Valley.

Comments: The CVP allocation is essential to SMUD's ability to continue providing reliable, affordable electricity to its consumers. It also makes possible SMUD's leadership role in energy efficiency and renewable resource programs. The assurance of CVP allocations has also been critical to the implementation of many cutting edge environmental improvements that benefit citizens of my congressional district.

Along with other Northern California Power Agency (NCPA) customers, we have made significant commitments to renewable resources that would not have been feasible without the CVP contracts. Loss of these contracts would make further commitments unlikely as well as jeopardize the stability of existing commitments.

Response: Western's power customers in northern California are leaders in the development of energy efficiency and renewable resources. Western agrees that renewable resource commitments might be adversely impacted if CVP contracts with existing customers did not continue.

Comments: Current CRSP power customers have contributed substantially to environmental protection programs and providing revenues for the Glen Canyon Monitoring and Research Center (GCMRC). Approximately 8–10 percent of CRSP rates fund environmental programs, such as the Upper Basin Recovery Implementation Plan and the GCMRC. This significant contribution, as well as customer commitments to integrated resource plans, demonstrates the commitment of CRSP firm power customers to environmental mitigation.

We could support the extension of SLCA/IP resources to existing customers if they were to support such ideas as renewable and energy efficiency investments, embracing green marketing to interested retail customers, supporting codification of funding commitments for mitigating the environmental impacts associated with the operation of Federal hydroelectric facilities, and agreeing to provisions that ensure that contract extension language will not impede dam reoperation.

Response: Western agrees that a significant portion of CRSP power revenues are used for environmental mitigation, monitoring, and research, all of which benefit the environment. Over $160 million in environmental costs, including purchased power required by experimental flows, have been funded by CRSP power customers through 1998. Now that operations at Glen Canyon Dam have been permanently changed to benefit downstream natural resources, the cost to replace the lost electrical power caused by this change is estimated to be in excess of $44 million annually, and could approach double that amount. In addition to the cost associated with lost electric power, there is a long-term monitoring and research program funded by power revenues which is anticipated to cost about $7,600,000 annually.

Capital funding of Upper Colorado River Basin endangered fish recovery is expected to cost about $17 million. Research funding for these same fish species is expected to cost $6 million per year. These costs are funded by CRSP power contractors. Moreover, additional purchase power expenses resulting from operational changes at Flaming Gorge Dam to benefit these fish are expected to total about $15 million over the next 5 years.

Purchasers of CRSP power have also had a positive record in energy efficiency and renewables. In 1998, CRSP customers realized over 138,000 megawatthours (MWh) in energy savings due to demand-side management investment. In excess of 692,000 MWh were generated from renewable resources in 1998 due to the investments of CRSP customers.

In addition, contract language has been developed to assure that dam reoperation will not be impeded by the extension of SLCA/IP resources. Firm power contracts will flexibly accommodate changes in operations, pursuant to the principles set forth in the EPAMP, 10 CFR part 905.

CRSP customers have supported environmental goals in the upper Colorado River Basin through significant direct funding and have paid, through higher power rates, for the loss of revenues attributable to environmentally beneficial changes in dam operations. In addition, their support of energy efficiency and renewable resources has been significant.

Comment: Existing customers have done IRP, now the Federal government should recognize the quid pro quo.

Response: Western agrees that existing customers have achieved environmental and economic benefits through preparation and implementation of integrated resource

plans as well as historic conservation and renewable energy activities.

Comment: Federal power allocations are the cornerstone of many consumer-owned electric systems. Many entities have acquired their entire complement of resources assuming the long-term availability of the core hydropower resource. Customers have planned their resource portfolios around their Western allocations. Some customers have made significant investments in transmission to deliver Western's power.

Response: Western agrees that economic dislocation would occur if resource commitments to existing customers were substantially withdrawn. Western and its customers have constructed high-voltage transmission to deliver power to existing customers, which could not be used for delivery of Federal power if allocation patterns were significantly changed.

Comment: Each resource from which Western allocates power should be analyzed separately with due consideration given to original participants. The history of purchases and the past level of commitment by existing customers need to be recognized.

Response: Through its project-specific marketing plans, Western analyzes how power should best be sold to meet regional needs. The past level of commitment is being recognized through the extension of a major portion of the resource to existing customers.

Comment: Western's historical power users have an equitable, if not a legal, interest in the hydroelectric systems providing the capacity and energy that Western markets. Just as the Bureau of Reclamation's water customers earn an equitable interest in the water rights held by Reclamation by paying for the irrigation systems, Western's historical customers have developed an equitable right to rely on the supply of power for which they have paid. Before the DOE attempts to reallocate the benefits of the Federal power system according to any of the new policies discussed in the Notice of Inquiry, it ought to reallocate system costs to reflect the contribution of current power users.

Response: Western's existing customers have no right to purchase power from Western in the absence of a contract. While equity is a consideration in the marketing of power by Western, customers have no equitable or legal right to purchase power beyond the term of existing power sales arrangements. There is no need to reallocate system costs, as the new policies suggested in the Notice of Inquiry are not being generally adopted by Western.

Comment: CRSP hydropower is a clean, renewable resource in which we invested when coal-fired generation was less expensive, but CRSP participation was needed.

Response: Western recognizes that many customers committed to the Federal power program at a time when other alternatives were less expensive. This historic support is appreciated.

Comments: Western's preference customers meet or exceed the goals of California's deregulation law and Federal proposals, which address reliability issues, independent system operator formation, market power issues, environmental mitigation, and open access. Peer review by NRDC of our public goods and environmental investments has demonstrated the progressive nature of public power in northern California.

Consumer-owned utilities have provided competition and impetus for open transmission access, and continue to be leaders in renewable and efficiency accomplishments in the utility industry. It would be inappropriate to threaten these worthy achievements by making adverse changes to their Western power supply, and thus upset the competitive balance that now exists between municipal utilities and other energy providers.

Our power authority continues to be a leader in environmentally friendly power generation, with a nationally recognized wind power project, a photovoltaic demonstration project and one of the nation's cleanest coal-fired power plants.

Response: Western agrees that many of its customers have been leaders in the deregulation of the electric power industry and have demonstrated their concern for the environment through action despite the increasingly competitive nature of the electricity marketplace.

Comments: The CVP has been a model to emulate in the utilization of the public's natural resources for the public good. The partnership between the United States and local entities has been mutually beneficial and should be continued. Continued access to the CVP power resources is essential to achieving the goals of electric industry restructuring—low electric rates for consumers.

Our water district and customers have worked in partnership with Western to promote economic and environmental interests. Any changes to the proposed 2004 marketing plan will only increase government costs and bureaucracy.

Response: Partnerships with customers have been invaluable to the success of the Federal power program.

H. Small Customer/Rural Impact

Comments: Under the State restructuring statutes adopted to date, there has been no indication that small customers have benefitted other than by legislatively mandated rate reductions required in the legislation itself, rather than as a consequence of restructuring itself. To the contrary, indications are that retail residential and small business customers are not being pursued by energy marketers.

Experience with deregulation in other industries has shown that smaller communities and rural areas generally do not share in the benefits of deregulation and are often harmed through the loss of service providers. This has clearly been the case with the airlines, trucking, railroad, and long-haul bus services. Telecommunications is another area where urban consumers have enjoyed the benefits of new technology before rural areas. Because of their population densities, a restructured electric industry may present smaller communities and rural areas with the same types of defection by service providers and/or absence of competitive benefits.

Every indication to date is that State restructuring has not achieved the anticipated benefits. It has instead led to mergers of large utilities, the sale of generating assets based on a belief that only large utilities can successfully compete in the marketplace, and a lack of interest by new energy suppliers in serving retail residential and small business markets.

Response: Part of Western's mission is to provide the economic benefits of cost-based Federal hydropower to rural America. Western declines to change its policies in a manner that has significant adverse impacts on public power customers.

I. FERC Licenses

Comment: FERC recently renewed the hydroelectric licenses in the Feather River Canyon held by investor-owned utilities without any competitive process. As a matter of fairness and equity, we would hope the customer-owned systems are treated in the same fashion. Renewals of the CVP contracts as proposed will help maintain the balance between investor and customer owned utilities in the region.

Response: The renewal of a FERC license appears to be comparable to the situation facing Western's existing customers at the end of their contracts for the purchase of power from Western.

The extension of FERC licenses lacks the flexibilities contained in Western's 2004 marketing plans, such as the reservation of power for new customers.

Comment: We think it very important to note that the investor-owned utilities were granted virtually perpetual FERC licenses in 1986 through the poorly named ''Ratepayer Protection Act.'' The theory was that the savings were being passed on to the ratepayers. In 1998, Pacific Gas & Electric Company (PG&E) announced plans to sell off these plants for close to $2 billion. PG&E is asking to be allowed to keep massive benefits that were supposed to be passed on to ratepayers. At the same time, CVP and CRSP customers are being challenged on our use of Western power, when we are passing on the benefits to our member-owners in a nonprofit fashion.

Response: Hydropower is a very capital-intensive resource that has no fuel costs, so it tends to be an economical and desirable resource in a utility's resource mix. FERC-licensed hydropower is a low cost resource, but its value is not always apparent as it is blended with other power resources of the licensee rather than being marketed on a stand-alone basis.

J. Term of Contract

Comment: A 20-year contract term is appropriate. Twenty year contracts have already been offered from the Pick-Sloan Missouri Basin Program-Eastern Division and the Loveland Area Projects. Regional equity calls for contract renewal for the remaining Federal hydropower projects. Twenty years is shorter than the 30-year contract term for the Boulder Canyon Project.

Response: In addition to the precedent cited in public comments, contracts for the sale of Central Valley Project power have variable terms, with the longest contract approaching 40 years in length.

Precedent exists within Western that supports 20-year contract terms. Regional equity is served by offering 20-year resource extensions to existing customers of the CVP and SLCA/IP.

Comment: The Southeastern Power Administration recently entered into 20-year power contracts. FERC licenses for hydropower generation have historically been granted for 30–50 years, a much longer time period than what Western is proposing here. We note that the Bonneville Power Administration has recently proposed a 20-year term for its post 2001 contracts.

Response: Precedent exists outside of Western for 20-year or longer power commitments, both for the Southeastern Power Administration and FERC licensees. The term of contract for Bonneville Power Administration power varies depending on the type of service a customer selects.

Comment: Contract terms under EPAMP, and as described in the December 1 **Federal Register** notice, are sufficiently flexible to justify a 20-year contract term. Western has already shown the flexibility necessary to accommodate changes in the industry while preserving its traditional mission. A 20-year contract term, with some flexibility for Western and its customers, would provide an adequate and stable environment for power marketing.

Response: Western's power sales contracts under the proposed 2004 marketing plans offer more flexibility to Western and its customers than in the past.

Comments: Twenty-year contracts represent a meaningful planning horizon and support the customer preparation of substantive integrated resource plans. Shortening the contract term would undermine our members' ability to do necessary resource planning, including further development of renewable resources. Western's Environmental Impact Statement (EIS) on EPAMP demonstrated that longer term contracts have a positive impact on the environment.

The proposed 20-year contract term for contract renewals is appropriate. Our town has planned its resource portfolio around the CVP allocation, and shortening the contract term would undermine our ability to perform quality planning, including further development of renewable resources. Certainty of the CVP resource has become even more crucial as we make the transition into the restructured industry.

Response: The EPAMP EIS predicted environmental benefits from longer term contracts, as customer investments in renewable resources and energy efficiency are more likely to occur when a stable foundation of Western hydropower exists. Integrated resource planning is enhanced when contracts provide a meaningful planning horizon. Many customers have planned their resource mix around Western's allocations.

Comment: Not one of the hosts of compromises and consensuses made during the development of the industry's restructuring in California included a change in Western's allocation process, nor did they include the possibility of Western's contracts being short term. With the expectation of long-term contracts, as promised in the EPAMP process, many public power utilities participated in and supported the restructuring effort.

Response: Western has no reason to doubt this statement.

Comment: Western may want to consider shorter terms for future contracts, or off ramps at set periods of time, where the option exists for portions of the contract to be open for renegotiation.

Response: Shorter term contracts would increase the amount of Western, customer, and public time and resources spent on marketing plan development. Given the recent history of lengthy public processes in the development of Western's marketing plans, the better policy direction is to decrease the time spent on marketing plans.

Western has built flexibility into its contracts already by allowing for resource adjustments in response to changes in power operations, hydrology, and project use development, which is typically water pumping load. Power can be withdrawn to meet the needs of potential new customers for most of Western's projects. Rates can be adjusted without limitation. Given this flexibility, Western sees no need to enter into contracts with a shorter term.

Comment: The contract term should be shortened to reflect the new marketplace. New entrants to the electricity market and the increased ability and desire of customers to choose their own supplier—or be their own supplier—means Western should be prepared to keep its options open and allow its customers to do the same. Long-term supply contracts prevent Western from responding to changing conditions. Offering contracts with varying terms may offer the best deal for Western and its customers.

Response: Western's customers have the flexibility to terminate purchases from Western when a rate adjustment takes place. This preserves customer flexibility. Western has withdrawn power from existing customers to meet the needs of new customers, and has reserved the right to withdraw additional power for new customers and other purposes even after its power sales contracts become effective. In addition, Western's power sales contracts already expire on different dates, depending on the project from which Western is marketing power. CVP and SLCA/IP contracts expire in the year 2004, while Parker-Davis Project contracts expire in 2008, Boulder Canyon Project contracts expire in 2017, Pick-Sloan Missouri Basin Program-Eastern Division contracts expire in the year 2020 and Loveland Area Projects contracts expire in the year 2024.

Comments: The current allocation system should be changed. The development of competitive wholesale and retail electricity markets as a result of electric restructuring increases the inherent market distortions caused by low-cost hydroelectric power provided by the PMAs. We believe that no PMA firm power contract should be longer than 5 years.

Since today's electricity market is in flux and is being restructured, it makes no sense for the Federal Government, or even any business, to sign 20-year contracts. The uncertain size and nature of future electric loads have led the private sector to accept contracts lasting no more than 5 years. Even if its contracts have withdrawal opportunities and rate flexibility, Western should not tie up its resources for any period longer than that done by the private sector. Protecting the status quo is unresponsive to the new electricity industry and the Federal taxpayer.

Response: Western notes that at least one power marketer has identified a competitive advantage in longer term contracts, and has run advertising promising peace of mind with a decade of locked-in, long-term energy prices. As is the case in the competitive marketplace, our customers can choose to enter into long-term arrangements (albeit without any guarantee of price from Western) or acquire power from others under either long-term or short-term arrangements. Far from protecting the status quo, Western is building flexibility into its contracts and marketing policies.

Comments: Lengthy Western contracts would ignore the very inequities posed by taxpayer subsidies to select electricity users. Those subsidies to Western, which are substantial according to the General Accounting Office and the Congressional Budget Office, distort the market, discourage efficiency, and waste taxpayer dollars. To extend power sales contracts for 20 years would compromise the ability of Congress and the administration to reform Western's operations and/or to spin Western assets off to non-Federal interests.

We urge you to consider changes in the electric utility industry as marketing plans are developed. Congress is actively considering legislation that would restructure the industry. Competition in this industry is vibrant and expanding. To date, 18 States have approved plans for retail competition, and every State is considering these issues. In this environment, Western and the other PMAs should not enter into long-term contracts that would deprive both Congress and the States of the flexibility to shape the emerging competitive electricity market.

Response: Western's rates are not subsidized. Current interest rates are charged on new investment, and recovery of costs that are not used in the production of power (such as salinity control and irrigation assistance) is required in Western's rates. Western's rates are reasonable because hydroelectric generation has no fuel costs. As the generation marketed by Western has been in service for many years, much of the original investment has been repaid. Moreover, Western does not have the responsibility to meet load growth through acquisition of more expensive additional resources.

Congress certainly has the ability to consider changes to Western's business practices or privatization. However, Western needs to carry out its mission and market power in accordance with existing law. Waiting for Congress to enact legislation deregulating the electric utility industry, let alone dealing with the future of the PMAs, is imprudent. There is no way to accurately predict whether and when any changes might take place.

Comment: Operation, maintenance, and repayment of Reclamation projects are critical items. Recognizing that power revenues are a significant source of revenue, it is imperative that the power contracts have a term of sufficient length to assure orderly repayment and support appropriate operation and maintenance decisions. An adequate time period is required to implement decisions and recover the costs associated with major maintenance work that incurs significant cost. Otherwise the work is vulnerable without commitments for funding and assurance to the power contractor that they will recover their investment during the contract period.

Response: Western agrees that shorter term contracts jeopardize customer financing of project operation and maintenance. Without customer financing, requests for appropriations will likely increase.

Comment: The Energy Planning and Management Program established 20 years as a floor.

Response: EPAMP established 20-year power sales contracts as a precedent, not a floor.

Comment: Twenty years is too long for tribes to be condemned to wait.

Response: Tribes are not being asked to wait. They can start receiving the benefits of cost-based hydroelectric power in 2000 from the Pick-Sloan Missouri Basin Program-Eastern Division and in 2004 from the Loveland Area Projects, the Salt Lake City Area Integrated Projects, and the Central Valley and Washoe Projects. Additional resource pool increments will be available for allocation to new customers 5 and 10 years into the 20-year contract terms for the Pick-Sloan Missouri Basin Program-Eastern Division and the Loveland Area Projects, and 10 years into the 20-year contract term for the Central Valley and Washoe Projects.

Comment: Adjusting the length of power contracts in an effort to affect retail markets may have unintended consequences. Shorter power contract terms, which increase the frequency by which customers can compare Western's cost-based products with market alternatives, may result in marketing volatility that threatens its ability to meet Treasury obligations if near or above-market Western rates encourage customer flight.

Response: Western agrees that marketing volatility and risk of nonrepayment to the Treasury increases with shorter term contracts.

Comment: Long-term resource and rate stability is important not only to our customers, but also to our ability to meet the environmentally important integrated resource planning requirements of Western.

Response: The EPAMP EIS found that long-term contracts are beneficial to the environment. Short-term contracts cause customers to focus on the uncertainty surrounding the Western resource, rather than looking to implementation of cost-effective energy efficiency and demand-side management to meet future needs. Short-term contracts could be a disincentive to the implementation of environmentally beneficial project improvements in support of the Clinton Administration's climate control action plan. Twenty-year contracts balance the environmental benefits associated with long-term resource certainty against the need for flexibility to respond to changing circumstances over time.

K. Legal Issues

Comment: Until such time as Congress enacts Federal retail competition legislation, Western should not change its existing policies. The Clinton Administration has not proposed to change Western's existing mission in its electric utility industry restructuring bill.

Response: Western's core mission remains unchanged in the absence of legislation from Congress.

Comment: Western's Energy Planning and Management Program has already received congressional scrutiny. Some members of Congress opposed the contract extension portion of Western's

program and unsuccessfully attempted to have it legislatively curtailed or erased. Therefore, there is no barrier to the extension of resource commitments to existing customers in accordance with EPAMP.

Response: The Energy Policy Act of 1992 contains no congressional barrier to the extension of resource commitments to existing customers.

Comment: Western's allocation policies are far too important to be substantially altered—as this **Federal Register** notice strongly suggests—without congressional action. Indeed, much of the policy might not be able to be changed without congressional action.

Response: No policy changes will be made that are not allowed by existing law.

Comment: Western has no authority to compete at the retail level.

Response: Western has broad legal authority to sell Federal power pursuant to statutory and case law. No Federal law prohibits Western from selling directly to nonutilities.

Comment: As the Second Circuit Court of Appeals has held, Congress believed that all interests can best be served by giving the local entities the right to decide on the ultimate retail distribution of the preference power sold to them. This belief was founded in the so-called ''yardstick competition'' principle, which assumes that if municipal entities are supplied with cheap hydropower, their lower competitive rates will force the private utilities to reduce their rates, with resulting benefits for all. It is not for FERC or the courts to second guess that basic determination.

Response: The cited Second Circuit case interprets the Niagara Project Power Act, which gives preference to public bodies and nonprofit cooperatives within economic transmission distance of certain hydroelectric facilities in the State of New York. In that litigation, the court limited the statutory definition of ''public body'' to publicly-owned entities capable of selling and distributing power directly to consumers.

Western's marketing authority is broader than that defined by the Niagara Project Power Act. Reclamation law allows Western to market to municipal utilities, rural electric cooperatives, public corporations and agencies, nonprofit organizations, Federal agencies, State agencies, and Native American tribes.

Comment: The legal problems associated with a change from the existing power allocation system are numerous. If changes are attempted, legal challenges lasting for years will be triggered. As the EPAMP and 2004 marketing plan processes have already been ongoing for years, there is a need to adopt a lawful marketing plan and allocations expeditiously.

Response: Western's marketing plans will be lawful.

Comment: Under the Trinity River Division Act of 1955, Congress intended to provide the Trinity Public Utilities District a perpetual right to certain Western energy. The draft 2004 CVP marketing plan contains provisions toward that end, and should be approved.

Response: The Trinity River Division Act of 1955 provides certain rights to preference customers in California's Trinity County. The 2004 marketing plan for the Central Valley and Washoe Projects will carry out the requirements of this law.

Comment: Congress has not been receptive to fundamental changes to the PMAs. For example, Congress recently reaffirmed its ban on studying the sale of the power marketing administrations.

Response: While some members of Congress have proposed the sale of the PMAs or significant changes to their missions, many others support the continuation of the PMAs and their existing programs.

Comment: The enactment of California AB 1890 did not, and was specifically not meant to, disrupt the long-term contractual relationship that California entities have for hydropower. The CVP marketing plan was developed at the same time as the California public utility commission restructuring plans which were incorporated into AB 1890. In fact, provisions of AB 1890 specifically provide for the delivery of preference power purchased from the Federal PMAs. Retail competition is just the most recent in a long line of changes to the increasingly competitive electric industry. The present power allocation system has been very effective in keeping pace with those changes.

Response: As a Federal entity, Western is not bound by the provisions of AB 1890. Western agrees that AB 1890 did not intend to impact Western's preexisting power sales contracts for the Central Valley Project.

Comment: California municipal utilities already fully comply with the requirements of AB 1890 and have even voluntarily agreed to independent verification of their programs. Western should not superimpose additional conditions on California public power utilities that were not intended when AB 1890 was enacted.

Response: Western agrees that many public power utilities are voluntarily complying with AB 1890. Adding conditions not intended by the California State Legislature would not be consistent with the policy of the Clinton Administration.

L. Existing Contracts

Comment: Western should honor existing obligations and contracts. Western should assure that the distribution of costs and benefits remains equitable and does not inadvertently harm existing contract holders. For example, distribution of costs based upon some criteria contained in existing contracts but not applicable to new participants may require amendments to those contracts, to avoid an inequitable distribution of costs.

Response: Western has every intention of honoring existing obligations and contracts. Western also intends to assure that the equitable distribution of costs and benefits will continue.

Comment: A basic element of the State of California's restructuring legislation, AB 1890, was that existing contractual relationships, such as CVP power contracts, would not be impacted.

Response: Western agrees that AB 1890 did not intend to impact Western's preexisting power sales contracts for the Central Valley Project.

M. Need To Complete Process Quickly

Comments: The 2004 marketing plans should be approved in a timely manner. Western has already invested considerable time and effort in lengthy public processes and environmental evaluations for the Energy Planning and Management Program and the project-specific marketing efforts for the Salt Lake City Area Integrated Projects, the Central Valley Project, and the Washoe Project. There is no compelling reason to undertake another lengthy process prior to approval of the plans.

Our tribal utility would greatly benefit from an extension of Western's resources as quickly as possible.

Western needs to approve the marketing plans quickly, as it takes time to negotiate contracts and acquire replacement resources. The contractual process for Pick-Sloan Missouri Basin Program-Eastern Division power started in 1995, and is still incomplete.

CVP customers are eager to sign power contracts, as they need to know the status of future resources to make choices on issues such as stranded costs, adoption of customer choice, and planning for replacement power.

Marketing plans should not be held up while the restructuring evolution takes place across the several States served by CRSP and CVP power. Five years' notice is necessary to allow resource plan adjustments if significant changes are planned.

Swift approval of the 2004 marketing plans and renewal of the contracts will ensure that the ''win-win'' relationship between Western and its customers will continue. Western's customers need sufficient advance notice of power allocations to allow for electric resource planning.

We support the approval of the 2004 marketing plan as a document reflecting significant compromise and feel that DOE should recognize the long public process conducted in its development.

Reopening the public process seems not only duplicative but places in question the credibility of such processes and perhaps even Western itself. It is essential that public processes be respected rather than manipulated. Any further review would be redundant and waste the taxpayer's money.

We are extremely disappointed that Western must regress to this unnecessary process, as we believe Western adequately addressed restructuring in preparing its 2004 power marketing plan. The CVP 2004 marketing plan is significantly different from the current plan and is fully adaptable to the newly restructured utility industry.

If Western would spend as much time developing new resources or resource improvement as it does on public processes, maybe they would have something to market without withdrawing from existing, long-served preference customers.

Response: Western agrees that the time has come to finish pending marketing plans for the Central Valley, Washoe, and Salt Lake City Area Integrated Projects.

Comments: The delay in approval of Western's 2004 marketing plan is resulting in negative impacts to the relationship that Reclamation and Western have worked to achieve and maintain with the public power industry. Western and Reclamation entered into funding arrangements with the long-term firm power customers in order to reduce the level of appropriations needed from Congress. Delay of marketing plan approval may cause customers to withdraw from funding long-term projects. Power customers would also be unwilling to fund long-term capital improvement projects if they cannot be assured that they will receive the benefits of the improvements. This would negatively impact repayment and the overall power marketing function.

The contract uncertainty created by lack of approval of the CVP marketing plan is manifesting itself in customer reluctance to fund improvements with payback periods beyond the current contract term. The result is lost economic opportunities and lost opportunities to reduce greenhouse gas emissions.

Response: Western does not want to jeopardize customer funding of long-term projects beneficial to the operation of power generation.

N. Ability To Compete

Comments: Hidden in this question is the thought that Western should dabble in retail markets and participate in a bidding war. Western is not a big enough player to be effective in the retail market. Since Western has little, if any, energy to sell in the open market to other than preference entities, there should be no change in Western's power allocation approach.

The majority of CRSP wholesale customers are small, rural and often Indian communities with marginal economic situations that will add nothing to enhance regional competition.

Response: Western's ability to impact the marketplace is limited due to our relatively narrow mission and the size of our resources as compared to the size of the electricity marketplace. Western has no intent to enter the retail marketplace in a substantial manner.

O. Repayment

Comments: CRSP power customers are repaying their debt ahead of schedule under long-term contracts that were negotiated at a time when CRSP power was higher than other sources. A shorter contract term increases the risk that the Federal investment will not be repaid on time.

Power revenues repay Federal debt for CRSP hydropower facilities, pay for the CRSP power program's annual operation, interest and replacement costs, and assist in the repayment of 95 percent of the project's irrigation costs.

CVP power sales have repaid over 70 percent of the Federal debt allocated to power so far, and will completely repay the power debt in the upcoming contract term, allowing Western to commence repayment of Federal debt allocated to irrigation which may otherwise not be repaid. Clearly the public interest is best served by renewing this partnership, not disturbing it.

Long-term contracts offer stability and value to both Western and its customers. Preference customers have repaid Federal debt ahead of schedule, furnished irrigation assistance, adopted and promoted environmental programs, and provided up-front funding of O&M expense.

Response: Western agrees that debt for both the Central Valley Project and the Salt Lake City Area Integrated Projects is being repaid ahead of schedule. Shorter term contracts increase Western's exposure to the volatility of the marketplace and may increase the risk of nonrepayment to the Treasury.

Comments: Given current uncertainties in the electricity marketplace, and the tremendous financial exposure to the taxpayers that unrepaid investment represents, it is responsible and beneficial for the United States to secure the repayment of investment with a long-term extension of Western's firm electric service contracts. The existing power allocation system works well, and has proven to provide a reliable revenue stream that assures repayment of multipurpose water projects, including irrigation aid. Do not jeopardize the repayment guarantee under existing contracts.

Western should not pursue a role that would create economic risk for the Federal Government (such as becoming a competitive generating agency) or would position the Federal Government to compete at retail against publicly and privately-owned utilities and other market participants.

The Federal Government also benefits from long-term, 20-year contracts by assuring revenues for project repayment with well-established customers without exposure to the volatility of the evolving marketplace.

Response: Western agrees that long-term contracts mitigate the market volatility that would otherwise exist.

There is no repayment guarantee under existing power sales contracts, as customers have the right to opt out whenever a rate adjustment occurs. However, few customers have exercised this contractual right, due in part to Western's control of costs and commitment to rate stability. Although power revenues associated with hydroelectric resources vary depending on water availability, power sales contract certainty has contributed to relatively steady repayment to the Treasury.

Western believes there are advantages to marketing power to well-established customers with a positive record for payment of bills in a timely manner. Some new participants in the deregulated industry have defaulted on

their obligations. In addition, Western believes that retail customers are more likely to switch power suppliers than wholesale customers, which would cause fluctuations in the revenue stream that is used to repay the multipurpose projects from which Western markets power.

P. Tribal Issues

Comment: Tribes are eligible preference customers. Most tribes are interested in receiving an allocation of power from Western. A useable allocation of Western power makes the difference in accomplishing economic development.

Response: Western agrees that tribes are eligible preference entities.

Comment: Western has a trust responsibility to the Indian tribes within its service territory. This is a different and greater responsibility than Western has to its current customers. In destroying traditional tribal economies, the Federal Government accepted a responsibility to assist and allow tribes to create new economies that are equal to the standards of living of other Americans.

Response: Western supports the DOE's Indian policy, which stresses the need for a government-to-government, trust-based relationship. The key theme throughout the Department's policy is consultation with tribal governments so that tribal rights and concerns are considered prior to action being taken. Western has met with Indian tribes and tribal representatives throughout the Energy Planning and Management Program's public process. Western also has met informally on a number of occasions with tribes since completion of EPAMP, both in the Missouri River Basin and in New Mexico and Arizona. In February of 1999, Western held informational meetings in Phoenix, Arizona, Albuquerque, New Mexico, and Folsom, California, to engage in dialogue with Native Americans on Western's power marketing programs. A 30-day comment period also took place in February to receive additional public input on the size of project-specific resource pools necessary to meet the fair share needs of new customers, including Native Americans. An informal meeting in Albuquerque in May of 1999 allowed additional consultation between Western and the Council of Energy Resource Tribes. Western believes that its consultation with tribes has been meaningful and substantive, and will continue at a high level in the future.

Comment: Western must help tribes to become ready, willing, and able. Western should help tribes to negotiate to obtain electric utility status.

Response: Western plans to allocate power to tribes and assist the tribes in obtaining delivery of the benefits of their allocations. As tribes need not form utilities to receive an allocation of power, Western is neutral on whether tribes should form utilities to meet electricity needs on the reservation. Technical and financial assistance to a tribe in support of utility formation may be available from the DOE or some other agency of the United States Government.

Comments: Access to electric service is a major issue for tribes and the people living within reservation boundaries. Some reservation residents have no electric service, while others have service that is high priced and of lower reliability than service off the reservation.

Western's power allocation system should be modified to take into account all regulatory changes, including those which allow Indian tribes and others open access to transmission and, therefore, greater access to Western's power and the power of others.

Response: Open transmission access at the wholesale level should make it easier for Western's allocations of power to be delivered to customers. Western is committed to working with the tribes and interested third parties to assure that Native Americans receive the benefit of allocations from Western.

Comment: Tribes are in the process of establishing vehicles for making utility choices. These vehicles will sometimes be utilities, and should be given full recognition by Western in its policy making and power allocations. Even if tribes do not form utilities, Western should allocate power directly to Indian tribal governmental loads such as government buildings, tribally owned economic activities, and public tribal housing and schools.

Response: Western intends to allocate power to eligible tribes whether they form utilities or not.

Comment: We believe that the historic marketing plans of Western are too lengthy, expensive and, therefore, too preclusive for small entities such as tribes.

Response: Under the Administrative Procedure Act, Western seeks public involvement and input on its marketing plans. Western agrees that its recent public processes have been lengthy. However, we believe it important that our processes allow for the involvement of small entities such as Native American tribes.

Comments: We believe the current power allocation program would greatly assist our five tribes in attaining an allocation of CRSP power and having certainty of that power as a resource in the future once an allocation is attained.

The current program with the specific language provided in the final EPAMP regulations, which provides for preference to small Indian communities, is more than adequate to assure our Indian communities can attain some of this power efficiently. Our tribes believe the contract extension policy is a sound business practice because once we receive an allocation, we should be able to plan on receiving it for many years to come. This would allow small Indian communities to receive a tremendous economic benefit.

Response: Western agrees that a potentially large economic benefit can be derived from an allocation of Federal hydropower, especially over the term of a 20-year firm-power contract. However, other costs associated with the delivery of Western's power could have a considerable impact on the size of any benefit, such as the cost of transmission service, supplemental power supply, and ancillary services.

Comment: The present power allocation system should be modified substantially to recognize the needs of the Indian tribes and its agencies the same as that accorded the States, municipalities, irrigation or power districts, and Federal entities.

Response: The 2004 marketing plans provide the same or better treatment for tribes as compared to other customers.

Comment: The history of energy development and use in general and Federal hydroelectric development in specific is a history of injustice and abuse of power on the part of the Federal Government. Many of the Federal dams were built from Indian lands and the resultant economic and social benefits from those projects were denied to Indian tribes. In many cases, tribes were inadequately compensated for the loss of whole communities, valuable farmland and cultural/religious/spiritual resources.

Response: Just compensation for the taking of lands to construct Federal dams is not an issue that is appropriately addressed through an allocation of power by Western.

Comment: The tribes request that Western, in performance of its trust responsibility, provide tribes with technical assistance to ensure the tribes receive the maximum economic benefits of low-cost Federally generated hydropower through management agreements with distribution utilities.

Response: To the extent that a tribe does not form a utility, Western intends to assist the tribes in obtaining the

economic benefit of allocations through bill crediting or some other appropriate mechanism involving the distribution utility. Western is committed to providing an appropriate level of technical assistance to tribes.

Comment: Policy and practice have discouraged tribes from developing the institutional, management, and technical capabilities as well as the physical infrastructure and financing to access the power.

Response: Western's allocation of power to tribes, without a requirement for utility status, should enable the tribes to access the benefits of Federal hydropower more easily. Historic assistance to the Navajo Nation by Western has resulted in tribal access to photovoltaic power in northern Arizona.

Comment: It could be argued that the Indian tribes' unused water, such as the Navajo Agricultural Products Industry which is 20 years behind schedule, is being utilized to generate Federal power over and over while it travels down river. While other entities have enjoyed the benefits derived from Federal power, Indian tribes and their agencies have yet to see equal benefits.

Response: Rights to the water that passes through turbines at Federal hydroelectric facilities are vested in different entities and/or are reserved for certain in-stream purposes. Possession of water rights does not mean a right to hydroelectric power generated by that water also exists.

Comment: A tribal utility could provide tribal government with the opportunity and means to use tribal borrowing and bonding status to improve utility infrastructure, improving the quality of life on very poor reservations. If done in conjunction with systemwide planning, tribal infrastructure development could very well reduce physical constraints in the transmission systems that would benefit everyone.

Response: Many of Western's customers have found utility formation to be beneficial.

Comment: We request that Western abide by the preference customer status provided to the tribes as described in the Energy Policy Act of 1992. The tribes would request the ''right of first refusal'' be provided to tribes and would remain in effect until the tribes receive their fair share of unobligated Western power.

Response: Western is unaware of any provision in the Energy Policy Act of 1992 that confers preference status on tribes. Western's treatment of tribes as preference entities is due to our interpretation of Reclamation law, taking into account DOE's Indian policy and the government-to-government relationship that exists between the Department of Energy/Western and tribes. Western believes that it can successfully meet the fair share needs of Native Americans without adopting a ''right of first refusal'' policy.

Comments: Issues of transmission and distribution must be addressed to allow tribes to access power. It has been Western's past history to build transmission to serve its customers. The new regulatory structure provides the opportunity to wheel power over existing systems. Tribes know they must negotiate with current service providers for access to distribution facilities and services. These negotiations can create win-win situations that are acceptable and even favorable to both parties. The degree by which Western's policies reward cooperation over conflict should be the standard by which its policies are judged.

Our greatest issue is communication and understanding. Tribes could be assisted to know how best to access the parties and individuals within the industry to make power allocations and utility operations workable.

Response: Western believes that cooperation, communication, and understanding are far preferable to conflict in achieving policy goals.

Q. Water Supply

Comments: Any changes in Western's allocations that are based on electricity industry restructuring should impact only distribution utilities and not water supply agencies.

Nothing in the California restructuring plan warrants fundamental departure from the 2004 marketing plan, especially with regard to service for end-use irrigation pumping loads.

Program purposes and the statutory intent underlying Pick-Sloan and the Flood Control Act have not changed and commitments must continue to be honored, particularly in view of the fact that actual irrigation development was substantially less than what was promised.

Western should continue to provide low-cost power to irrigation, and should not enter retail markets.

Response: Western intends to abide by Reclamation law requirements, including the requirement that hydroelectric power be reserved first for project-use loads. As there is no convincing rationale to do otherwise, policies regarding reductions in commitments of power to existing customers will be uniform. To the extent irrigators receive allocations of power from Western that are not project use in nature, they will not be exempt from equitable contribution by existing customers to project-specific resource pools.

R. Need for Power

Comments: Long-term reliability is critical to farmers who raise crops. The benefits derived from our power contract with Western have a direct impact on the local economy and produce far-reaching benefits, such as groundwater improvement, efficient water exchanges, and a vibrant local agricultural economy.

The State of New Mexico is sparsely populated and relatively poor. Western's CRSP power means a lot to us. There are a substantial number of customers who have contributed to the repayment of Federally-owned generation facilities for over 30 years. If those customers had built generation plants in the '60s rather than purchased the output of Federal facilities built for the primary purpose of irrigation, flood control and recreation, these generation facilities would now be paid for and competitively priced.

Resource uncertainty is especially critical in rural areas which have limited access to resource opportunities. To deny utilities with low customer density access to Federal power would be devastating to rural consumers and small businesses who are already paying much higher rates for distribution and transmission services than urban customers.

Share the benefits of cost-based hydropower with the taxpayers by extending contracts with the Air Force.

Significant reductions in or the loss of the CRSP resource would necessitate acquiring alternative power supply at dates later than prudent from a long-term planning standpoint. The cost of replacement power would be passed on directly to the retail consumer.

Western's allocation of CRSP power to our electrical district is integral to the long-term groundwater management plan in Arizona, including the goal of reducing groundwater pumping within the State as documented in our integrated resource plan. CRSP power is also key in maintaining the viability of the Central Arizona Project for future generations. The long-term bonding and financing of our canal system is also based on the continued economics of preference power.

Continued access to the CVP resource is necessary to ensure affordable future improvements. It would be inappropriate to threaten these worthy achievements by making adverse changes to customers' CVP power supply, and upset the competitive balance that now exists between

municipal utilities and other energy providers.

Western's power allocation is very important to our rural electric cooperative in Wyoming, as we have a consumer density of 2.2 consumers per mile of line. Our neighboring investor-owned utility has a density of 26 consumers per mile of line. For each cooperative customer, more than 11 times the facilities are required. Because of the rural nature of the area we serve, we are already at a price disadvantage in a competitive marketplace.

Most entities, including the investor owned utilities, continue to serve their customer base reliably, efficiently, and at lower rates than previously existed. As California emerges from the imposition of transition costs after 2002, rates will further decline and customers will likely be less inclined to switch providers. Western's customers must have an assurance of long term, 20-year contracts to remain in this competitive mix.

Regarding the effect on the University of California, Davis of AB 1890 and the deregulation of the electric power market in California, no clear conclusions can be drawn. The UC Davis campus has joined with the other University of California campuses, and the California State University system, to contract for purchase on the open market for our power requirements not met by Western. This is a short 4-year contract with an independent power marketer. While this contract is expected to save the campus money compared to the cost of power purchased directly through the California Power Exchange, it is more expensive than Western's hydropower, and the term of the contract is short. Adoption of the proposed 2004 marketing plan will benefit us by protecting our cornerstone of Western power, while at the same time, for our remaining power needs, allowing the pursuit of future benefits that may come available through deregulation of the California electric power market.

Both the Black and Hispanic Chambers of Commerce for the City of Sacramento urge the expeditious approval of the CVP 2004 marketing plan. Access to low cost, clean, renewable public power is an essential prerequisite for continued economic development and growth of communities in northern California.

With regard to the Ames Research Center, National Aeronautics and Space Administration, our allocation needs to be maintained in order to minimize the cost of operating two national wind tunnel complexes. There is an urgent need for our wind tunnel data, as it enables aircraft manufacturers to design transports that can fly with greater energy efficiency. Estimates of fuel savings as a result of our research are in the hundreds of millions of dollars per year. In addition, our research enables American aircraft manufacturers to maintain a trade surplus of $15 billion per year.

Response: These representative comments from existing customers demonstrate the widespread need for Western's power.

Comment: Extending Western contracts would further the discrepancy between the preference clause's intent of advancing ''municipal purposes'' and the distribution of Western power to some of the nation's wealthiest communities. As you know, Western does no means testing for the distribution of its low cost and subsidized electricity, nor does it provide any preference to public schools or other public purposes. Power marketing administrations, if they are to continue to exist, need to focus on end users and offer true public benefits only to those in need.

Response: As is the case with any utility, some customers purchasing electricity are more affluent than others. The same is true for the customers served by a PMA. However, the great majority of Western's customers are in genuine need of Western's resources, as evidenced by the comments previously set forth. Western already allocates power to universities and a variety of State and Federal loads. Western's intent to sell power from project-specific resource pools to Native American tribes is clear evidence of our intent to assure that the benefits of Western's cost-based hydroelectric resources are available to economically disadvantaged entities.

Comment: Today, preference power is being used in ways that Congress did not originally intend. For example, power generated from facilities owned by the American public is being allocated to provide below market electric service to wealthy communities such as Vail, Colorado, and Palm Springs, California. Other customers, such as the Salt River Project, have formed a for-profit marketing entity whose mission is to compete against private, taxpaying, and often highly regulated energy companies.

Response: Western does not market power to Palm Springs. The ski resort of Vail is served by Holy Cross Energy, which also has within its service territory many rural consumers and small communities that do not enjoy economic benefits from ski resorts. Both the Department of Energy and the Department of the Interior have formally issued opinions finding no violation of law or contract in the efforts by the Salt River Project to compete in the rapidly changing utility industry, as the Salt River Project is not reselling Federal power.

Comment: Rather than going to customers based upon their geographic location, allocations from the Federal power facilities should be based on means testing. Only those who truly cannot afford to pay market rates should be the beneficiaries of continued preference allocations. This class of citizens obviously includes more than just rural western or southern America. Federal preference power should be targeted only to State and Federal buildings and facilities where the taxpayer is paying the energy bill. We cannot legitimately continue to act as a Nation to provide wealthy ranchers and owners of posh ski resorts with preference power to the exclusion of poor families located in Toledo, Hartford, or St. Paul.

Response: Congress has by statute authorized Western to sell firm power in its 15-State service territory. The other Federal PMAs also market power in the territory adjacent to their power and transmission resources. Well over half of the country is within the marketing areas of the PMAs.

According to the latest estimates of the United States Census Bureau on national income and poverty, the poverty rate in the western States is 14.6 percent. Both the Northeast States (12.6 percent poverty level) and the Midwest States (10.4 percent poverty level) enjoy higher prosperity. Also of interest is the Census Bureau's conclusion, based on 1997 data, that 12.6 percent of residences inside metropolitan areas are in poverty, while 15.9 percent of residences outside of metropolitan areas are below the poverty line. This information suggests that the greater need for cost-based Federal power exists in the western United States and in rural areas.

Even if Western had the legal flexibility to sell power to needy entities throughout the Nation, the cost of delivering the power would erode any cost savings. Acquiring rights over intervening transmission systems would be a significant expense. Losses in energy due to resistance in the transmission line conductors would also diminish the economic benefit.

Western already markets its power to many State and Federal facilities that meet existing allocation criteria. Allocating more power to these entities could give them disproportionate

benefits and cause power resource dislocations for existing customers.

S. Supplemental Suppliers

Comment: The impacts of any change in policy would fall primarily on supplemental suppliers. Western should move cautiously when the impact of its decisions may be to undermine or damage contractual relationships between its preference customers and their supplemental power suppliers.

Response: Western agrees that the impacts of its policies on supplemental suppliers must be taken into account before decisions are made.

T. Dam Operations

Comments: There are a number of aquatic environmental issues associated with the operation of the Federal hydroelectric facilities that produce SLCA/IP power. The Aspinall unit on the Gunnison River and the Flaming Gorge unit on the Green River dramatically affect downstream flow conditions and habitat for fish species. We believe the Endangered Species Act requires Western to evaluate the effects of contract extension on conservation and recovery of listed species. If Western believes that, either as a policy or legal matter, the extension of SLCA/IP contracts could limit the Bureau of Reclamation's discretion in operating facilities like Aspinall and Flaming Gorge, Western must prepare a site-specific assessment of the environmental impacts of contract extension.

We are aware that Western contends that DOE regulations categorically exclude marketing plans from NEPA documentation unless they involve new generation, new transmission, or a change in operations. However, we believe the regulations are illegal if their effect is to excuse Western from assessing the impact of contract extensions that circumscribe the ability of the Bureau to reoperate a project.

We have concerns, legal and otherwise, regarding the relationship between contract extensions and programs to recover endangered fish and otherwise protect the aquatic environment.

Response: Under EPAMP, the extension of resources to existing customers is based on the marketable resource determined to be available at the time future resource extensions begin. If the Bureau of Reclamation reoperates power generation facilities such as Flaming Gorge and Aspinall before September 30, 2004, that change in operations will be reflected in the power commitments to existing customers. In addition, Western's contracts allow for changes in our contractual commitments attributable to changes in operations after 2004. Given this flexibility, there is no need for site-specific assessments of the impacts of contract extensions. The extension of firm power commitments does not limit the ability of the Bureau of Reclamation to reoperate power generation facilities.

U. Integrated Resource Planning

Comments: If retail competition expands, key resource acquisition decisions will shift away from today's utilities and toward private generation markets and retail customers. In this environment, the role of EPAMP's IRP requirement is unclear. We have heard from a number of Western's customers that they are not interested in pursuing IRP given the competitive changes in the industry. We are concerned that EPAMP no longer represents responsible environmental stewardship in a changing utility industry.

We oppose contract extensions for SLCA/IP power until EPAMP regulations are made consistent with the evolving industry structure.

The State of South Dakota encourages Western to amend EPAMP's IRP regulations to allow the most flexible requirements possible.

IRP no longer makes sense in a retail environment.

Response: Western's integrated resource planning regulations are outside the scope of this notice of inquiry, which deals only with power allocation issues. Western intends to start a public process to consider revision of our IRP criteria later in 1999.

V. Preference

Comment: Preference should be examined carefully in a full NEPA review considering both the economic and environmental impacts on preference and nonpreference customers. Western should mitigate for any serious effects and proper mitigation may include eliminating or drastically altering preference.

Response: Preference in the sale of Western's power is mandated by law. As Western does not have the authority to eliminate or drastically alter preference, a full NEPA review of the issue would not be fruitful.

Comment: As electric restructuring moves forward and the paradigms governing electric distribution and financial risk are changed, we must consider how the existing Federal system is managed. Equally important is how we distribute the benefits of the Federal system. In the upcoming year the Congress will be reviewing some of the fundamental issues that are raised in allocating Federal power. What were the characteristics of the group originally intended to be benefitted by defining them as preference customers? Why did one group of Americans receive the benefits while others did not? Do the criteria remain the same today? Are we still benefitting fundamentally the same people? Since the Federal allocation system was designed to benefit a particular group, do we need to respond to changes in the larger electric utility industry to make sure the same beneficiaries are reached? Do the changes in the electric utility industry that have occurred since the Federal system was originally established eliminate the need for the historic distribution/allocation scheme? And finally, if there is going to be a change, how can we best protect the legitimate needs of existing PMA customers?

Response: Western lacks the legislative authority to make fundamental changes to preference in the sale of our hydroelectric resources. However, allocations are not limited strictly to municipal utilities and rural electric cooperatives. Western has allocated power and/or transmission rights to such diverse public loads as wildlife refuges, universities, and a mass transit system. Native American tribes are also treated as preference entities without the need for utility status. These allocations to nontraditional customers were made while still meeting the needs of existing customers, and contribute to the widespread use of Western's resources.

W. Rates

Comment: Western's ratesetting must be cost-based. Western lacks authority to introduce new rate components or to reinterpret 60 years of statutory construction. Western also lacks authority to charge rates based on a newly conceived formulation intended to effectuate a redistribution of its electricity among electric consumers.

Response: While ratesetting is outside the scope of the power allocation issues inquiry, Western agrees that our firm power rates must be cost-based.

Comments: The real implication of this first question is that Western should sell its resources in a short-term fashion to the highest bidder.

We support legislation that mandates a bidding system in which preference power is allocated to the highest bidder, or one in which the high bid sets the contract price for such power. Under such a scheme, the preference customer would be given a right of first refusal to purchase the power at high bid, thus preserving traditional preference. This approach has the advantage of

eliminating the inequities now incumbent in Federal power allocations, prevents further under recovery of PMA costs, and maximizes revenue to the Treasury.

Western should adopt a tiered, marginal cost rate structure to reflect appropriate market rates and eliminate the subsidy inherent in the existing system. Offering low rates encourages Western's customers to use electricity wastefully and forces other consumers to develop excessively expensive supply resources to meet electricity needs.

We congratulate Western on recognizing the need to consider the impact of electric utility industry restructuring on the way Western allocates power. A level playing field among all electric suppliers is mandatory in an open access retail electric marketplace. All competitors should have the opportunity to bid for low-cost power allocations. A bid system would lessen the anti-competitive impact of PMA power.

Response: Pursuant to law, Western sets its firm-power rates to recover costs. FERC's review of Western's rates is based upon whether the rates are the lowest possible consistent with sound business principles.

Western has no leeway to adopt a generic bid-based method for marketing firm power, even if a preference customer has the ability to buy the power by matching the high bid. If Congress mandates the sale of power at market-based rates, Western has the flexibility to comply pursuant to the rate adjustment provisions in its firm-power contracts.

PMA power is not anti-competitive in its impact. Western markets cost-based hydroelectric resources, which are relatively inflation resistant as compared to non-hydro generation due to the absence of fuel costs. In addition, Western has no responsibility to meet load growth with relatively expensive additional power. Western's hydropower resources are reasonably priced due to these factors, and promote yardstick competition.

Western's customers do not waste electricity. Pursuant to Western's integrated resource planning regulations, customers have established an impressive record of investment in energy efficiency, demand-side management, and renewable resources.

Comment: Even under existing statutes, Western should re-prioritize its allocation of preference power to better reflect competitive market principles. Specifically, Western should adopt a system under which Federal electricity is auctioned to bidders in the same way as is Federal coal, oil, and natural gas. Revenues so garnered could be used for worthy purposes in Western's service territory.

Response: Bidding for Western's firm power to generate revenues in excess of those needed for project repayment is not allowed under Federal law.

Comment: Western has a cost problem due to the increasingly competitive regional power market and the social costs (e.g., environmental costs and irrigation assistance) that have been mandated for inclusion in CRSP rates. Western has a finite window within which it can contract into the future to protect its congressionally mandated repayment mission. Western is ill-equipped because of its role as a Government sales agent and its congressionally mandated responsibilities to compete in future markets.

Response: Western will continue to make every effort to assure that CRSP power remains marketable.

Comment: Is it fair for neighbors to pay different rates for their electricity because of their race?

Response: Western's wholesale rates are the same for all long-term firm customers. Many different factors influence retail rate levels, including the cost of other power, transmission cost, and distribution expense.

Comment: Western should move to unbundle its firm power rate to accelerate Western's movement into an open access environment.

Response: Western has developed rates to implement its open access tariff.

X. Delivery Changes

Comment: Western currently requires concurrence from all affected parties before the State of South Dakota is allowed to redistribute power from one State load to another. This policy places veto power in the hands of supplemental power and transmission suppliers with the effect that the State's use of Western power and other power available under open transmission access principles is constrained. The present policy should be replaced. Western should be willing to move allocations upon proof of a legitimate load and adequate billing mechanisms. IRP stabilization arguments that benefit supplemental suppliers should be rejected in the face of the State's interest in wholesale open access consistent with FERC's actions.

Response: Western's requirement of concurrence by the transmission provider and supplemental power supplier is a contractual and policy issue that does not conflict with FERC Order No. 888, which preserves existing contracts. Western has experienced instances where allocations were made, but the allottee was unable to take delivery because existing power supply contracts did not allow additional power suppliers. Requiring concurrence avoids this situation, and recognizes that transmission arrangements also need to be amended when power deliveries change. It also avoids conflict with mandated franchise service territories, as South Dakota has not yet mandated open access for end users. Concurrence has been a policy requirement for over two decades, and has yet to have been unreasonably withheld. IRP stabilization arguments, based on the premise that load stability promotes better resource planning, are secondary to the contractual considerations.

Question

2. To the extent a utility with an allocation of preference power loses load due to retail competition, should it receive the same allocation as it received previously or should its allocation be reduced proportionately?

A. Disincentive to Retail Wheeling

Comment: Adoption of this policy would discourage retail wheeling, as the risk would be a disincentive for a utility to open up its load to competition.

Response: Utilities might see the potential loss of an allocation as a disincentive to adopting retail wheeling.

B. Administrative Issues

Comments: A real time, load based allocation process is complex from both a policy and an administrative basis. There is no guarantee that the change would lead to an improved outcome.

Administration of this policy would be time-consuming and costly. As retail customers make choices and come and go, Western would be required to address daily, weekly, or even monthly load fluctuations for the many preference customers who currently receive hydroelectric resources from Western.

What if a retail customer has a business downturn and their power usage is reduced by half? How would Western reallocate the power from this reduced usage? Would Western reallocate the power if the retail customer's business returns to normal at some later date? It seems that Western is opening up a can of worms that could have unintended consequences.

Western cannot possibly know whether the lost load is due to a temporary problem on the part of the wholesale customer, a problem resulting from demographic trends or economic cycles, or whether it is a permanent loss

due to restructuring of the utility industry. At the very least, Western should not attempt a reallocation from existing users to new customers without developing a record of the factors underlying such a move and offering existing contractors the opportunity to review and comment on the record.

Response: Western believes that the administrative complexities of adopting such a policy are significant. The policy benefits of monitoring load losses and gains, if any, are minor as compared to the cost and administrative burden associated with a change in policy as suggested by this issue.

C. Increase in Allocation

Comments: The utility should receive the same allocation. As a preference utility does not receive an increase in its allocation if its electric load increases, why should there be a loss of allocation if load declines? If Western does not strive to achieve a sound and balanced basis for adjustment of allocations, it appears that the purpose of the suggested change in policy is to find ways to reduce allocations to preference customers using State restructuring legislation as an excuse.

Western is a sales agent, not a utility. Western did not increase our allocation when our load outgrew the original commitment of Federal power, so we were forced to acquire supplemental power elsewhere.

If energy is freed up as a result of a preference power entity allowing retail access in its traditional service territory, then this power can be made available on a temporary basis to other preference entities as withdrawable power. Since the entity offering retail access will remain as the default energy provider, and would be required to serve customers returning to its system, a permanent reduction of an allocation may not be prudent.

Response: Western has a finite resource to market. Unless power is withdrawn from a customer pursuant to the terms of a firm power contract, Western does not have additional electricity to market on a firm basis. Western agrees that there are many administrative complexities associated with reducing, restoring, and reallocating power in the manner suggested by this issue.

D. Local Decision Making

Comment: The local utility is best positioned to distribute Western's power among the remaining customers.

Response: Public power utilities are well positioned to distribute power among consumers. Western's firm-power contracts address this responsibility. The most recent provision of Western's general power contract provisions states: ''The contractor agrees that the benefits of firm electric power or energy supplied under the contract shall be made available to its consumers at rates that are established at the lowest possible level consistent with sound business principles, and that these rates will be established in an open and public manner.''

E. Policy

Comment: Federal power is only a fraction of the total resource needs of Western's customers. Even if significant load is lost, the Federal power allocation will still be needed to serve remaining load.

Response: With only minor exceptions, Western agrees that its power only meets a portion of the load of its customers.

Comments: Allowing preference customers to retain the same allocation of preference power would be anti-competitive.

When a utility with a preference allocation loses load due to retail competition, that preference customer's allocation should be reduced proportionately and indefinitely.

It is unclear what Western plans to do with any power withdrawn under this proposed policy. If the power is to be redistributed among preference entities that have experienced gains in load, this only serves to increase the competitiveness of those utilities which are already competitive and further weaken those without as competitive a resource mix or higher unit costs.

Response: Western normally serves only a portion of a customer's load. As the marginal resource necessary to meet the rest of a customer's load is typically higher in cost, it is more appropriate to reduce the non-Western resource when load is lost due to retail competition.

Comments: Current policy requires that unused allocations revert back to Western for sale to other preference entities, therefore preventing the resale of power. Western has built in adequate safeguards that limit use of an allocation to the retail load that we serve, and Western has retained the requirement that Federal power not be sold for resale.

Western's 2004 marketing plan for the CVP addresses recall of any allocation beyond a customer's demand.

Response: Western agrees with these comments. Currently applicable language in Western's firm power sales contracts prohibits the sale for resale of Western's power.

Comment: Customers who choose to leave a utility that has a power allocation from Western also have elected to leave their ''share'' of Western power to the customers who do not leave.

Response: Western agrees that this may be the result, depending on applicable contractual language.

Comments: Western should only withdraw power if the customer load exceeds the Western allocation. If a contractor loses so much load that it cannot use all the Western power it has under contract, it will advise Western and reduce its obligation. Otherwise, it will pay for a resource it cannot use.

Customers are prohibited from resale of Western power pursuant to contract. As a result, there is no ability for a customer to use Western power in excess of its load. Allocations of power in excess of a customer's load must be returned to Western for reallocation, pursuant to the applicable project-specific marketing plan.

Response: Western's 2004 marketing plans and contracts will not allow for the resale of hydroelectric power if a customer loses load and their Western allocation exceeds the remaining load.

Comment: Should preference distribution customers split away from a generation and transmission cooperative, and form new aggregations, Western should follow the preference distribution customers upon whose load profiles the allocations were originally given.

Response: When an existing customer merges with another customer, or members of a customer want to leave a parent entity such as a generation and transmission cooperative, disposition of allocations must take place in accordance with applicable marketing plans and contractual provisions. Each situation must be addressed on a case-by-case basis. New contracts executed under the Sierra Nevada Region and Salt Lake City Area Integrated Projects 2004 marketing plans will give the Administrator the discretion to adjust a customer's power allocation in the event the customer merges with another organizational entity, acquires or ''spins off'' another utility, joins or withdraws from a membership-based organization, or adds members from a membership organization.

Comments: Why would Western want to punish a small customer who has no market clout by reducing its allocation of preference power because a larger retail customer, by its own choice, decided to receive its power and energy from someone else?

Reducing the Western allocation would be like trying to put out a fire by

throwing gasoline on it. Our cooperative is a perfect example of what happens when you lose load. We lost load due to the bankruptcy of our largest user, a mining company. We had to raise rates by 32 percent early this year to compensate for the loss of fixed cost and revenue. Can you imagine what would happen to the remaining consumers if Western notified us that because we lost 60 percent of our load, we should lose 60 percent of our allocation? Western's allocation is the one stable foundation we have left.

Retail competition has not benefitted residential customers in States that have opted for retail access. Those customers who leave the system are typically larger customers who have the expertise and business sophistication to negotiate and bear the risks of arranging for power supply service from alternate suppliers. If a small municipal customer loses a commercial or industrial load and also loses a share of its Federal allocation, it will be a double whammy to residential customers who stay on the system.

Power marketers are interested in achieving market share, and later reducing competition to maximize profits. A change in Western's policy could accelerate this process by penalizing cooperatives that lose load. If large industrial customers with good load factor are removed from a local cooperative's customer base, the impact will be devastating enough without Western's policy adding more momentum to a process that seriously damages remaining customers.

Loss of any portion of the Western allocation would unfairly penalize existing customers and decrease our competitive position in the marketplace. Such a policy would also eliminate the very important ''yardstick'' vehicle which consumers can use in determining their power supplier in a competitive marketplace.

Reducing our allocation if some retail customers choose other suppliers could cause a cascading effect and serious economic consequences to our community and burden remaining customers.

To reduce allocations because of retail competition losses could initiate a ''death spiral'' for the affected utility and penalize remaining customers, mostly residential, rural, and small business in nature.

Response: Western agrees that no policy purpose is served by withdrawing allocations from customers that have recently lost load due to retail competition.

F. Public Power and Competition

Comments: Although this question is academic at present, when it becomes reality preference power allocations should be reduced proportionately. The larger issue is what to do with large public power entities that are entering competitive markets and winning new load, while at the same time being subsidized by taxpayers through preference allocations and favorable tax treatment. Western customers like Salt River Project who are competing for and winning new load should have their allocations stripped or, at the very least, offset on a megawatt-for-megawatt basis.

The more important question is why a utility that receives preference power should be allowed to compete for retail load in the first place. Western has some of the lowest power costs in the nation. Preference utilities receive other Federal preferences, either through tax-exempt municipal financing, low interest loan programs, and clemency from income taxes. The more likely scenario is that these preference utilities will be adding customers, not losing them.

Response: The Department of Energy has reviewed allegations that the Salt River Project inappropriately used Western hydropower to enhance its competitive position in seeking new customers. DOE found that those allegations had no merit, and that the Salt River Project was acting in accordance with the law. The Department of the Interior recently issued a similar finding. Under these circumstances, Western sees no reason to diminish its hydropower allocations to the Salt River Project.

As Western's customers cannot resell Western's power, they have no competitive advantage from a Federal hydropower allocation in the utility marketplace.

G. Reason for Load Decline

Comments: There is little substantive difference between consumers who move out of the area or close down a business, and those who decide to use a different energy supplier. We see no rational basis to penalize loss of load due to retail competition but not loss of load for any other reason.

If a utility receiving preference power from Western loses load due to retail competition, or any other reason, the resulting allocation amount should be reduced accordingly. To do otherwise would change the allocation process to introduce artificial, and probably arbitrary, factors necessary to compensate for lost load, rendering the process inconsistent. In States that have adopted retail access, preference customers have the option to opt in or not participate. Thus, load loss is due to the choice of Western's customers. Judgment by Western's customers, like any other business enterprise, results in the stakeholders being rewarded either positively or negatively.

This approach is contrary to the manner in which electric utilities acquire and maintain commitments for resources that are an essential portion of the stability of wholesale power supply.

The alteration of allocations to accommodate fluctuations in retail load would diminish the certainty of a power supply source which many preference customers have incorporated into their forecasting for power supply.

What if a customer has undertaken a program to encourage conservation at the same time competition has come to its service territory? Will Western penalize its customer because load has been reduced due to conservation?

Response: Western's historic allocations to customers have been principally based on the load of applicants. Those loads are dynamic over time, as some consumers leave and others move to a utility's service territory. However, these are not the only factors that influence electricity usage. Adoption of conservation and energy efficiency measures, changes of service territories between utility providers, weather, improvements in industrial processing, fuel switching due to price or availability, construction of cogeneration, and improvements in distribution system losses all can impact a utility's load. Tracing a change in load to a particular cause, such as the impact of implementation of retail wheeling, might present some difficulties. Western certainly does not want to punish utilities that have implemented conservation and energy efficiencies.

Western has not monitored load growth and adjusted its allocations in the past. As loads have grown for certain customers over time, Western's allocations became a smaller portion of those customers' resource mixes. Other customers have not experienced load growth, or the pace of growth has been slower. Western's allocations have not been adjusted in response to load changes for a variety of reasons. First, resource planning for Western's customers would be disrupted. Second, continually adjusting firm power contracts is not a standard practice in the utility industry. Third, if load decreases, Western's customers adjust their resource mix in a manner that results in the lowest cost to the ultimate consumer. As other resources are typically more expensive than Western power, consumers are best served if

other resources are cut first as opposed to Western's hydropower. Fourth, Western does not want to increase its budget to monitor load changes, as there is no clear policy benefit that would warrant the additional cost, which would put upward pressure on our rates.

Adoption of this policy would fundamentally change the nature of the service Western currently provides under firm-power contracts. Continuous adjustments to the quantities of power sold by Western would convert a very valuable class of service, firm power, to a more contingent resource.

Western does have the ability, when existing contracts expire, to consider the percentage of our power that existing customers receive. An example is the 2004 marketing plan for the Central Valley and Washoe Projects, which has proposed to increase allocations to existing customers who enjoy a relatively small allocation of Western power as a percentage of load.

H. Stability

Comment: The threat of reductions in allocations would make it difficult for Western's customers to offer stable products and services to their consumers on other than a short-term basis. This lack of resource and administrative stability would be a significant competitive disadvantage for CRSP customers.

Response: Western agrees with this comment.

I. Tribal Issues

Comments: If a utility with an allocation of preference power loses load due to retail competition, its allocation should be reduced proportionately. The resulting savings should go back into the pool for reallocation to Indian tribes who have historically enjoyed the least benefit from national resources.

Our tribes request that any Western power that becomes available through the power allocation system restructuring process be directed to address the inequity of the system to provide tribes with a fair share of available power. The tribes request a ''right of first refusal'' option be incorporated into the restructuring system.

Response: For the reasons outlined earlier, Western will not reduce allocations to customers, whether Native American or not, who lose load specifically due to retail competition. Therefore, there is no power available for this reason to allocate to tribes.

J. Unintended Consequences

Comment: If a utility were to be stripped of its allocation in proportion to its loss of load resulting from voluntarily allowing its customer-owners retail access, that utility would be tempted to cut deals to retain the large customers that competitors would pursue. This would tend to distribute the benefits of preference power away from small customers. Energy efficiency programs might also suffer if a utility were tempted to focus instead on acquiring new load.

Response: Western agrees that a utility might take steps in response to a change in policy that adversely impacts energy efficiency investment and small customers.

K. Western's Role

Comment: This question mischaracterizes Western's function. Western's power allocation decisions have not been made on load growth or loss analyses. Western is not a utility, it is a marketing agent with a finite and declining resource to market. It is in no position to accommodate load growth and in even less position to monitor load loss.

Response: Western agrees that its role is to market power to repay the U.S. Treasury for investments financed by taxpayers. Adopting the policy suggested by the question would blur Western's focus on its primary mission.

Comment: If Western's decisions with respect to power allocations will have the effect of making it more difficult for municipal governments to attract new business, the purpose of the municipal preference will be entirely thwarted.

Response: Western has no desire to impede the economic development efforts of municipal governments.

Question

3. Should Western allocate power directly to electricity end-users that are preference entities such as publicly-owned schools in States or localities that permit retail access? If so, how much power should be allocated for this purpose? Alternatively, should Western continue to allocate power primarily to its traditional customers such as municipal and cooperative utilities and Federal and State agencies?

A. Administrative Issues

Comments: Making Western a retail provider would change Western's business structure. Western would have to organize its workforce to deal with hundreds or thousands of customers, with significant start up and ongoing costs to Western and its customers.

Allocating power to thousands of end users, as opposed to the current 600 customers Western serves, is not economically warranted or practical, and would result in a paperwork nightmare for Western.

Response: The benefit of a Federal power marketing administration gearing up to play a major role in the retail marketplace is unclear. The cost of adding staff to carry out this role would be considerable.

Comments: While direct retail sales by Western may appear to spread the benefits of Western power more broadly, most retail customers are poorly equipped to handle the vagaries of fluctuating hydropower production or sharp reductions in available power due to changes in operations of CRSP facilities required by law. Retail service involves much more than a simple allocation of power and energy. Load following and other intricate ancillary problems of electric service become involved.

Adoption of this policy would be an administrative nightmare. Direct retail sales would be less efficient, as retail allottees would be required to seek additional power resources, combine those resources, and schedule them in the most economical manner. Transmission, distribution, metering, reserves, energy imbalance, and other services would have to be obtained to deliver electricity. Most end-use consumers are not sophisticated enough to provide for such services themselves. Alternatively, they would need the services of a scheduling agent or an existing utility to provide these services, with an increase in cost to the end-use consumer.

If Western were to serve an end user directly (such as a school), what would Western do with the power generated at night when a school cannot use it? How would Western meet the school's air conditioning load in September during drought years? Such a proposal would likely lead to increased profits for those wanting to absorb the excesses, and make up for the deficiencies, by dismantling public power.

Response: Western agrees that allocation of power to end users presents a number of complex problems.

Comment: If Western were to single out its utility customers for allocation reductions that would be transferred to end use preference entities in States that allow retail access, Western would incur increased administrative costs and need to raise rates while reducing the benefits of preference power to existing customers.

Response: Western agrees that one impact of allocating power to public

schools directly could be an increase in costs to existing customers.

Comment: No new contracts should be written at less than a 100 kilowatt allocation.

Response: Minimum allocation amounts are often appropriate, but are best determined in project-specific marketing plans.

Comments: Changing allocation policies also raises the question of assuring equity among States. How will Western compare different States' programs for retail electric competition? Allocating Federal power to customers based on State laws will result in unequal access to such resources. Some States have now created quasi-public schools by allocating tax moneys to charter schools and private schools. Some States have proposed adoption of school voucher programs to allow students to use tax dollars to go to the school of their choice. The definition of a public school is becoming less clear every year. Every educational institution from home schooling to correspondence classes that can show Federal or State tax support will want to apply for an allotment of Western power.

Response: Western agrees that it could be difficult to compare the different approaches to retail wheeling among the States within our service territory and incorporate them into a cohesive overall policy. Western also agrees that the definition of a public school is not straightforward.

B. Allocation Priorities

Comment: End-use customers, although previously excluded because of a lack of access, should be treated at least on a basis comparable to traditional Western customers. An enhanced priority should be considered for these customers, since any economic benefits would accrue to all segments of the public.

Response: Western has allocated power to large Federal and State installations in the past, as they are public bodies. The economic benefits derived by these installations are to the benefit of the public. These installations typically take delivery at transmission voltage and operate their own system for distributing power to load. This approach avoids the complications of delivering Federal power to numerous smaller end users and the associated administrative burden.

Comments: Western should make its allocations based on the nature of the end use customer served, and should not be made simply to the cooperative or municipal utility. To the extent that Western's power is not priced at market rates but instead continues to be subsidized, we believe that allocations should only be made to public facilities that are supported by taxpayer moneys, such as military bases, State universities, hospitals, and prisons.

Providing power directly to end users such as public schools and other Government entities is far more consistent with the spirit and intent of the preference clause than providing allocations to wholesale customers who use preference power to engage in their own competitive efforts.

Response: Western already allocates power to military bases, State universities, hospitals, and prisons. Exclusively serving these entities would dislocate existing power supply for cooperatives and municipal utilities.

Comment: Allocations of Pick-Sloan preference power should not be distributed to retail competition loads but rather to its current contract customers who are not receiving their full allocation from Western. Our current allocation would have been larger during the original allocation if not for the fact that formation of our municipal utility was delayed by years of litigation by the IOU that served our city.

Response: This comment was raised by a customer of the Pick-Sloan Missouri Basin Program-Eastern Division. As power from the Pick-Sloan has already been allocated and in most cases placed under contract through the year 2020, Western has no immediate ability to respond positively to this comment. A resource pool increment of up to 20 MW will be available from the Eastern Division of Pick-Sloan in the year 2005. How this power will be distributed will be determined on a project-specific basis in a future allocation process.

Comment: Western should consider widening the eligibility for Western power to include retail cooperatives.

Response: Western will consider any application for Federal power in accordance with Reclamation law and project-specific allocation criteria.

C. Dilution of Benefits

Comments: Changing Western from a wholesale provider to a retail provider raises the very real risk of diluting this resource to the point where it is of no value to the end-user.

Current policies spread the benefits to end users. Broader distribution of Federal resources would further dilute the benefits of hydropower. The CRSP annually meets less than 4 percent of the total load in the marketing area. The CRSP is increasingly an insignificant market factor from a commercial or competitive standpoint. Any broader distribution or allocation would simply further dilute the resource.

Response: Western agrees that this is a concern. However, part of Western's responsibility is to distribute power on widespread basis. Western needs to consider the needs of new preference entities, as well as the continuing reliance of existing customers on the Western resource.

D. Duplication of Resources

Comments: We do not believe that it would be appropriate for Western to jump into the retail sales business when selling power to preference customers at the wholesale level is a very efficient and effective way for Western to carry out its legislative requirements. Western should not compete with its customers, who already provide benefits of cost-based Federal hydropower to end users.

If Western were to expand its role into the retail end of the industry, the result would be an inefficient duplication of distribution, rate making, billing, and ancillary services that would most likely more than offset any benefit to Western or the end user of the power.

Response: Western agrees that it is more efficient to continue to distribute the benefits of Federal power through its customers. Western has no desire to duplicate services already provided by its customers.

E. Favoritism

Comment: Adoption of this policy would penalize consumers served by public power distributing utilities in States that choose not to engage in competition, while favoring schools and localities in States that permit competition.

Response: Penalizing consumers served by Western's customers, based solely on their State of residence, is not equitable.

Comment: There should be no favoritism among preference entities.

Response: Western makes every effort to assure that its power is allocated in an equitable manner.

F. Legal

Comment: Allocating power to end use loads is far beyond the intent of the preference laws. Western is a wholesaler of power.

Response: There is nothing in Reclamation law that prohibits Western from allocating power at wholesale to nonutilities, such as Federal and State agencies. Congress has recognized this on many occasions. For example, in authorizing the California-Oregon Transmission project, Congress recognized that Western markets to loads such as the Department of Energy

laboratories in California. Hearings have also been held regarding Western's marketing policies. In June of 1994, the Deputy Secretary of Energy testified before the House Subcommittee on Oversight and Investigations, Committee on Natural Resources, on a variety of marketing issues, including the status of Native American tribes as preference customers.

Comment: Western cannot market to publicly owned schools, as they are not preference entities. In its post-89 marketing criteria for the CRSP, Western interpreted section 9(c) of the Reclamation Project Act of 1939 as requiring any new preference entities to have utility responsibility.

Response: The Post-1989 General Power Marketing Criteria for the SLCA/IP were published in the **Federal Register** on February 7, 1986 at 51 FR 4866. At page 4870 of that notice, Western stated that power would be allocated to a State or Federal agency with an ultimate consumer type load, to utilities, and to existing contractors that did not otherwise qualify for an allocation. Under these project-specific criteria, Western allocated power to a number of nonutilities, including the University of Utah. However, these criteria represent policy specific to SLCA/IP power, which is narrower than the parameters of preference law generally. Criteria for marketing to new customers after 2004 will be broader than those existing in the 1989–2004 time frame, in order to assure that Native American tribes are eligible to receive allocations, regardless whether utility status exists.

Comment: Western is prohibited by law to sell power to nonutility customers while there are preference utilities who are willing to purchase the power. Western's sales are subject to a statutory preference requiring it to sell power to municipal utilities and cooperatives.

Response: Reclamation law requires Western to offer to sell power first to preference customers. Among preference customers, Western has discretion to whom it sells. Pursuant to law, Western has allocated power to State and Federal entities, which are not utilities.

Comment: The concept of allocating preference power to entities such as schools has been firmly rejected as conflicting with the promotion of yardstick competition required by Federal preference acts. The Second Circuit Court of Appeals has ruled that yardstick competition would exist if publicly-owned utilities competed against privately-owned utilities in selling of power to ultimate consumers. If the ''public body'' used the preference power itself, the privately-owned utilities would not face any pressure to reduce the prices they charge other customers. If preference power were made available to all government bodies, whether or not they distributed that power to consumers, every town and local library would be entitled to claim a direct share. Hydropower would be spread so thin that any competitive effect it might have had would be lost. *Metropolitan Transportation Authority* v. *FERC.* 796 F.2d 584, 592 (2d Cir. 1986).

Response: This case is based on the Niagara Project Power Act, and a FERC license issued to the Power Authority of the State of New York, pursuant to that act. Neither the Act, which contains a narrow definition of preference entity as compared to Reclamation law, nor the terms of the FERC license are applicable to Western.

Comment: Regardless of electric utility industry restructuring, Reclamation has the legal responsibility to deliver irrigation pumping power to existing irrigation pump units prior to any other use.

Response: Western markets Federal power which is surplus to the needs of the project, and may not execute contracts which impair the efficiency of the project.

Comment: This issue raises significant questions of the legal authority of the PMAs to participate in retail electric markets. Reclamation law does not authorize such a result, and the Federal Power Act has provided for local jurisdiction over retail markets.

Response: Western agrees that decisions regarding retail markets are local in nature, and that the Federal Power Act only gives FERC regulatory authority over wholesale transactions by public utilities in interstate commerce.

G. Need for Power

Comment: In order to promote a competitive open power market, Western must explore alternatives to its traditional power allocation criteria and select customers. Such alternatives should include Indian communities such as Shiprock, Kayenta, Chinle, Tuba City, Window Rock, and Ramah on the Navajo Reservation. Allocations of Federal power to these communities may enable them to attract and establish economic development within their areas. Currently, unemployment among Indian communities is the highest in the Nation.

Response: While Western intends to market power to tribes without requiring utility formation, Western does not market electricity to municipalities unless they have utility status.

H. Partnership

Comments: It is unlikely that end use customers would band together, as existing customers have, to fund and finance deferred maintenance and efficiency improvements such as the new runners at Shasta or to lobby for the Shasta Temperature Control Device. Either appropriations for maintenance would need to be increased, or environmental and economic opportunities would be squandered. Energy expenses are a large and important fraction of a Western distribution customer's budget, but only account for a small portion of a typical end user's budget. Pragmatically, this means that Western is much more able to influence and gain attention from distribution customers than from end use customers.

Allocation of power in this manner will undermine existing environmental commitments, as hydroelectric power would not be available for integration with other renewable resources.

Response: Western agrees that end users are much less likely to have the resources to integrate Federal hydropower with renewable resource development. Customer financing of project maintenance and improvements is also much more achievable with a smaller number of entities, such as has been the case with Western's existing customers.

I. Policy

Comments: Allocation of power directly to end users such as schools would require them to administer a new resource contract and convert their prior utility relationship to multiple electric contract management. For schools with loads under about 4 MW (all but college campuses) the administrative costs would overwhelm the bill reduction. Schools in existing preference customer territory would suffer higher rates as resources were taken away from their existing utilities to be allocated to schools outside of their utilities.

Our school district is a customer of a Utah municipal utility that receives an allocation of CRSP power. The CRSP allocation is an integral part of the resource portfolio of our consumer-owned utility and is essential to its ability to continue providing reliable, affordable electricity to our citizens and businesses. It is of paramount importance to our community and local economy that the marketing proposal be approved as quickly as possible to provide certainty to our utility and to the consumers it serves.

Expanding direct access to Western's resources by an ever-widening list of end users at the consumer level will become discriminatory, litigious, unmanageable, and bad policy.

Response: Western agrees with these comments. Administrative costs would likely offset the bill reduction for small school loads. Schools that receive the benefits of Western hydropower would be adversely impacted if the communities they serve did not continue to have access to Federal electricity.

Comment: Western's current marketing approach benefits publicly owned schools in those communities receiving Western allocations. In addition, both the University of California at Davis and the Radiation Laboratory at the University of California at Berkeley receive allocations. Further allocations to publicly owned schools would be unnecessary.

Response: Western agrees that many schools and universities already receive the benefits of power allocations from Western.

Comment: It is unclear what national policy objective would be served by the change in policy suggested by this question. Assuming Western has a policy objective in mind, it would be helpful if Western would articulate it and seek comment on the goal. It is also unclear how present practice does not serve a policy of widespread use of Western's hydropower.

Response: The question was posed to see if further extension of widespread use to retail loads was feasible and practicable. Western believes that widespread use is being achieved under its present allocation practices.

Comment: Adoption of this policy would favor school districts in high power cost States at the expense of school districts in low power cost States which have done a good job throughout the years in holding rates down and see no need to restructure their electric utility industry.

Response: Western agrees that this might be the result of a change in policy.

Comment: Western should consider giving allocation priority or credits to customers that undertake aggressive energy conservation and/or demand-side management efforts.

Response: Pursuant to the Energy Planning and Management Program, Western has reserved the right to allocate power from project-specific resource pools for this purpose. However, decisions on how to allocate power from resource pools will be made on a project-specific basis.

Comment: Western should continue to allocate power to its traditional customers so they can continue to serve end users and ensure that the benefits of Federal power are broadly and efficiently distributed. Public schools get their pro rata share of preference power through municipal utilities and cooperatives. Western was created to conduct wholesale sales of Federal hydropower, with certain limited exceptions for direct Federal loads. Western is not a retail distributor and there is no reason to change its role. Western should focus on what it does best and not enter the retail market.

Response: Western's expertise is as a wholesaler of power.

Comments: Participation by the Federal government in the business of producing electricity is no longer warranted. The conditions under which the Federal government entered the electricity business due to widespread areas of the country being in need of electrification no longer exist.

Should the Federal government remain in the electricity business under current law, the question becomes how best to allocate the electricity produced at government-owned dams. Western should not be a retail marketer of electricity to end-use customers. However, today's economic and competitive realities also are against continued power allocations to cooperatives and other traditional preference customers other than for historic purposes.

The National Rural Electric Cooperative Association's (NRECA) own website proclaims cooperatives to be ''the electric utility industry's most powerful, strongest and fastest growing markets with a growth rate that is nearly three times that of investor-owned utilities.'' NRECA further states that cooperatives ''are affecting retention, expansion and growth by offering incentive rates to large consumers of electricity.'' Rural electric cooperatives have moved away from their purpose of serving sparsely populated rural areas. Cooperatives can offer lower incentive rates to large consumers in significant part because of allocations of low-priced Western hydroelectric power which is not available to their for-profit competitors. Continued subsidization of cooperatives by such means is obviously no longer required and only will help drive private utilities and marketers from the marketplace through subsidization of Western hydropower.

Response: Only Congress can decide to remove the PMAs from the electricity business.

Comment: The priority should be in developing criteria that assure preference allocations only go to those actually deserving.

Response: Developing an allocation system based solely on who is deserving would be difficult, as virtually every customer and potential customer that has commented during this process has argued that their need is greater than others.

Comment: How would Western handle States partially covered by the marketing plan wherein some retail preference entities would receive preference power and others would not because they were outside the marketing area?

Response: Western only markets power within its established marketing area. If the suggested policy were adopted, only those retail loads within the marketing area would receive an allocation.

Comment: Western should continue to allocate power to its traditional preference entity utilities. There is no indication whatsoever in the emerging retail markets, however slowly they are emerging, that these nonprofit utilities will not continue to give their customers the benefits of this resource.

Response: Western expects that nonprofit utility customers will continue to pass through the benefits of cost-based hydroelectric power to consumers. Preference customers were formed by its member-owners for just this purpose. Moreover, Western's contracts require that the economic benefits of allocations be distributed to consumers.

Comments: During the collaborative process that led to restructuring and customer choice legislation in Montana, all investor-owned utilities were hostile to the PMAs migrating from a wholesale role to one of a retail supplier.

Allocation of power to retail loads such as public schools would set up friction with other power suppliers. The Federal Government should not compete with other retail power suppliers.

Western is a marketer of a finite amount of wholesale power and should not enter the retail market. This reality is underlined by the uncertainties of hydroelectric generation. Allocations directly to retail customers would disrupt local and regional utility markets.

Response: Past efforts by Western to deliver hydropower to Federal agencies, such as Department of Defense installations, have met with resistance from existing power suppliers. Based on the comments received in this public process, there is little public support for Western taking on the role of a competitor for retail load.

Comment: It would be virtually impossible for Western to selectively serve individual schools throughout California and would be a disaster for many existing smaller preference power entities. We believe that schools within territory served by investor-owned utilities have already received rate decreases and further decreases will occur when stranded costs have been recovered.

Response: Western agrees that the State of California has mandated rate decreases to IOU-served electric consumers in the State, and that school districts have been among those paying decreased rates. California consumers served by IOUs are expected to receive additional rate relief once stranded costs have been recouped.

Comment: As the power supply function of the dams from which Western markets power is secondary to the water supply function, market pricing and direct access for retail customers cannot be applied to the Federal power program.

Response: Western's mission is not the same as that of a retail power marketer or other competitor in serving retail load.

Comments: If end-users are preference entities, why has Western not contracted with them directly in the past? If Western does decide to serve end users, an extension of the existing load-based allocation methodology should be used. The entity losing the load should be allowed to recover a wheeling charge for transmitting the Western power over its low-voltage distribution system.

Our water agency uses Western power to provide water supply to our customers. We are an end user of electricity and as such believe that Western should continue to make allocations to us and others who are similarly situated.

Direct sales to end users, such as schools, would be inconsistent with the longstanding practice of marketing Federal power only to public and cooperative wholesale distribution utility customers and Federal and State government installations.

Response: Western has served certain end users in the past, such as irrigation districts and Federal and State installations. However, Western sells power to all of its customers at wholesale and typically delivers power to our customers' distribution systems. If a utility loses load due to an allocation by Western, it is appropriate for that utility to charge a wheeling fee for transmission of Western power utilizing its system to the load receiving the allocation.

Comment: Western's current nonprofit preference customers are better suited to integrate the variability of the hydro resource into a resource portfolio to serve end users. Western has already achieved the goal of widespread use, as embodied in Reclamation law, by marketing to a very diverse set of nonprofit entities.

Response: Marketing to a diverse group of customers serves Western's policy goal of achieving widespread use.

Comment: There is a high degree of diversity existing in the nature and operating characteristics of the rural electric systems owned by the customers we serve. Local choice and decision making are important in recognizing that diversity.

Response: Western agrees that its power is already marketed to a wide variety of customers in a broad geographic area. Widespread use is being achieved without the need for Western to serve retail load directly.

Comment: The proposed withdrawal of 6 percent of existing CVP customers' current allocations to provide a resource pool for new customers achieves the proper balance of not overburdening the existing customers, who have planned their utility around the CVP resource, while also providing a meaningful pool for reallocation. This is especially true for CVP customers, whose Western allocation will be changing from the firm energy supply to receiving only a pro rata share of the CVP base resource. In our members' cases, they will be losing not only the 6 percent of their capacity, but are also losing about 50 percent of the energy that is currently being supplied by Western.

Response: Under the 2004 marketing plans, Western is scaling back its role as a provider of power and not increasing it. Western's SNR is offering a hydro-based resource unsupplemented by purchase power, with firming purchases being made by the customer or by Western only at the customer's request. While some purchasing of power will continue for the SLCA/IP, the level of purchases is expected to be lower and driven by customer choice.

Comment: BPA's pending subscription proposal for post-2001 power sales contemplates sales to regional IOUs with targeted delivery to residential and small farm customers. This proposal differs substantially from the direct sales suggested Western. First, BPA has an express statutory responsibility under the Northwest Power Act to deliver benefits to residential and small farm customers of Northwest IOUs. Second, BPA would make the sale to the distribution utility serving those customers—not to the end user. Third, the sales would only take place after the full contract requests of preference customers were satisfied. The Public Power Council would oppose direct sales to end users by PMAs as contemplated in Western's Notice.

Response: Western understands that customers of other power marketing administrations are concerned about the precedent that would be set by an expansion of Western's role in the utility industry.

J. Preference

Comment: If Western keeps preference, even after NEPA review, it should distribute power to eligible preference entities. One of the major problems with preference is its arbitrary nature. A school on one side of a line may get preference power, while a school on the other side does not. Western should market its power to those willing to pay market rates for power.

Response: The boundary between two utilities is no more arbitrary than any other boundary, such as that separating a higher tax jurisdiction from a lower one. A consumer of electricity on one side of the street may have lower rates than a consumer on the other side of the street for many reasons other than access to PMA power. Such factors as the price of other sources of power, the cost of transmission, customer density, access to capital, and strength of management can all bear directly on the cost of power.

K. Rates

Comment: As an alternative, the economic benefits associated with a modified bid process should be used to directly subsidize government agency end-users.

Response: Western has no authority to adopt this comment in the absence of legislation.

L. Risk

Comment: Direct allocation to retail customers would likely inject more risk into Western's power marketing program.

Response: Western agrees. In addition to the exposure to market volatility and the risk of not obtaining customer funding for project maintenance and improvements, marketing of power to retail customers would raise the likelihood of delinquent payment of bills. This risk is considerably lower when Western markets power to a smaller number of established customers with a history of prompt payment.

M. Source of Power

Comments: While our irrigation district does not oppose additional end users receiving allocations from the resource pool, such allocations should not come at the expense of existing long-term CVP preference power customers.

Power allocated to retail consumers should be derived from utilities presently serving those consumers.

Many end users are already served by Western, such as irrigation districts, Federal and State agencies, prisons, universities, and military installations. If a resource pool is to be formed for allocations of power to new end-use customers, such allocations should not be at the expense of existing end-use customers.

Response: Western believes equity is best served by forming resource pools through withdrawal of power from existing customers on a pro rata basis. These resource pools will be made available to new customers, including Native American tribes, on a project-specific basis.

Question

4. In a retail choice environment, what additional steps, if any, should Western take to ensure that the full economic benefits of preference power are passed through to end-users served by the distribution utility that receives a power allocation from Western?

A. Administrative Issues

Comment: Please do not add additional reporting and oversight requirements, which will lead to the creation of an additional and unnecessary layer of bureaucracy and expense.

Response: Western is striving to be as businesslike as possible in its activities. Unless an important benefit results, Western has no desire to add bureaucracy and associated expense to our agency.

B. Experience and Staffing

Comments: Western should not attempt to engage in ratesetting or rate review by comparing rates among utilities. Such comparisons would be enormously time consuming and could easily overwhelm Western's staff.

We do not believe Western has the expertise or the staffing to evaluate and compare one preference customer's retail rate structure against another's to determine whether either appropriately conveys the ''full economic benefit'' of preference power to all or even selected classes of end users.

Response: Western agrees that active monitoring of each customer's efforts to pass through the benefits of its hydroelectric power would not be time well spent. Contractual provisions already require customers to provide the benefits of firm power to consumers. If misuse of Western's electricity occurs, a breach of contract remedy already exists to address the situation.

C. Legal

Comment: An affirmative answer to this question would interfere with States' rights and violate the Tenth Amendment of the United States Constitution.

Response: The Tenth Amendment to the Constitution provides that the powers not delegated to the United States by the Constitution nor prohibited by it to the States are reserved to the States respectively or to the people. Article 4, section 3 of the Constitution provides that Congress shall have the power to dispose of and make all needful rules and regulations respecting property belonging to the United States. The sale of power is the sale of government property, and Western has the ability to place conditions on the sale of its power. Since Article 4 of the Constitution delegates to the United States the power to sell government property, it does not violate the Tenth Amendment.

Comment: Western's statutory mandate is to market power and energy ''in such manner as to encourage the most widespread use thereof at the lowest possible rates to consumers.'' Congress clearly contemplated that the focus of Western's marketing efforts should be on low consumer cost, and not restructuring incentives or disincentives.

Response: Western's policy is to market power in such a manner as to encourage the most widespread use thereof at the lowest possible rates consistent with sound business principles. This policy has its origin in the Flood Control Act of 1944, which became law many years before legislative consideration of restructuring of the utility industry began. However, applicable law does not preclude consideration of the impact of restructuring on Western's policies.

D. Policy

Comments: Current policies spread the benefits to end users. Existing customers are nonprofit, and already have every incentive to pass the economic benefits of Western's power on to ratepayers. Western should not assume the role of traffic cop. Western's goals and the goals of existing customers are the same—pass the economic benefits of preference power on to end users. Existing contracts restrict the use of Western power appropriately, so there is no need to expand the provisions of those contracts.

Western's power cannot be resold pursuant to contract, and Western's customers are already nonprofit by definition. There is nowhere for economic benefits to go but to the end use customers.

Our municipal utility is governed by representatives of its customers. These customers appreciate the value of the economic benefit of preference power and ensure that such value stays within the municipal utility's service territory borders.

Why should the Department of Energy micro-manage local decisions, when in the past there has been an excellent history of passing the full economic benefits on to end users?

Western, by contract, already requires its contractors to pass on the benefits of CRSP power to consumers. Since these are nonprofit entities, it is hard to imagine how they would not do so. Indeed, the concept of mandating the pass-through benefits originated at a time when private for-profit entities contracted for some of this resource because there were insufficient preference entities to do so. In that situation, those economic benefits could have been passed on to shareholders. That is not now the case.

Response: Western agrees there is no need for additional steps to assure that the economic benefits of preference power are passed through to the end user.

Comments: If a preference entity offers direct access, the amount of preference power available to that entity should be capped at the entity's native load. The purpose of this is to ensure that preference power is not retailed or exchanged for profit.

Preference power should only serve native load. Otherwise, utilities may abuse the system.

With extended contracts, Western power recipients seeking new customers would increase their unfair advantage. At a minimum, Western must be far more diligent in ensuring that its preference power participants do not use the low-cost Federal electricity to obtain an advantage in the competitive marketplace.

Response: Typically, Western only serves a portion of its customers' needs. Safeguards against the inappropriate use of Federal hydropower already exist, as Western's contracts forbid the sale for resale of Federal power and require that the economic benefits of Western's power be distributed to consumers. How a customer markets non-Western power

is not appropriately a concern for Western.

Comment: Not all public power utilities have the option to opt in or out of competition for retail load. Salt River Project was required by State law to make retail competition available to 20 percent of its load at the end of 1998.

Response: Legislation on this point varies from State to State.

Comments: In a deregulated electric industry, the organizational structure of the distribution utility should not be a determinative factor in disposing of Federal preference power. The distribution utility should be treated simply as a poles and wires entity with no ability to manipulate the supply side of electric service. It seems unfair that existing utilities holding preference power allocations could use their Federal preference power to attract new customers in ways that do not provide benefits to their existing service territory or their current base of retail customers. One potential way to handle this issue is to vest the contractual right to preference power in the wires or distribution portion of the existing preference utility. In effect, this would lock the preference power allocation into the preexisting service territory and the current retail customer base even in a retail competition environment.

The government subsidies inherent in sales of preference power can distort the operations of markets and give unfair competitive advantages to certain recipients of this low cost power. Some preference customers are seeking to enter competitive markets, and they should not be able to use such subsidized power to gain an unfair competitive advantage.

Response: Western's customers are unable to resell their Federal preference power, as existing contractual provisions prevent sale for resale of Federal power. Given this existing safeguard, Western sees no need to vest the allocation in the distribution portion of a customer's system.

Comments: Our city charter already requires that retail rates must be cost-based and approved at an open, public hearing where public comment is solicited. Aware citizens are the best safeguard against inappropriate distribution of the benefits of Western power.

Western's requirements under the Energy Planning and Management Program assure that the economic benefits of preference power are passed through to end users and that end users have the opportunity to know how this arrangement benefits them. The requirements for IRP involve a public process, which provides additional assurance for end users to understand the benefits of the preference allocation process. The information provided in a distribution utility's IRP filed with Western satisfies the question on the ultimate beneficiary of a preference power allocation.

Response: Western agrees that information provided to the public during local rate setting and integrated resource planning efforts strongly supports the policy of assuring that the economic benefits of Western's power are appropriately distributed.

Comment: Western should condition its allocations by requiring municipal utilities to offer cheaper electricity in poorer parts of their service territory.

Response: Most of Western's customers do not serve wealthy areas. However, Western is sensitive to the issue of need for reasonably priced power. Western is devoting considerable effort to delivering the benefits of its power to Native American tribes in need of lower priced electricity.

Utilities already have programs to assist consumers who cannot readily pay their utility bills, such as lifeline rates and assistance programs for low-income consumers. The Federal Government already addresses this issue through funding of the Low Income Home Energy Assistance Program. Conditioning of Western's allocations by requiring customers to offer less expensive electricity in poorer areas appears to duplicate programs that already exist that serve the same function.

Comment: State law prohibits discriminatory rate treatment by assigning the lowest cost resource to some consumers, but not to others.

Response: Western does not want to implement policy that conflicts with State law.

Comments: Preference distribution utilities should be permitted to use Federal power as is most economically useful in benefitting all their customers. However, the status quo allocations to current preference utilities should be reconsidered to fairly distribute the use of Federal power.

Market conditions should be allowed to establish the sensitive equilibrium between power cost and value. The establishment of more rules would slow adoption of open access power market principles.

No additional steps need be taken. The customer assumes responsibility for its own destiny when deregulation occurs. Neither the regulator nor the distribution utility have an obligation to protect the financial integrity of the customer.

Response: The use of Federal hydropower should not be as unfettered as suggested in these comments. Sale for resale of Federal power is prohibited under Western policy as reflected in power sales contracts. Allowing sale for resale would distort the intent underlying Western's allocations. Allowing the resale of Western's power at a profit would be totally inappropriate, as it would allow for private gain on a taxpayer financed and publicly owned resource.

Comment: If Western is concerned about additional assurance, ask each distribution utility to verify the amount of electric power and energy supplied at retail within its area and require that this amount is equal to or greater than that delivered by Western to the distribution utility.

Response: Western already has the right under existing contracts to ask its customers to demonstrate whether the benefits of cost-based hydroelectric power are being passed through to consumers and whether resale is occurring.

Comment: In a retail choice environment, Western must take additional steps to ensure that the full economic benefit of preference power is passed on to end users. The considerable tax subsidy Western receives, price subsidy Western conveys, and environmental costs Western exacts on the Sacramento and Colorado Rivers means Western is granting excess economic benefits at the expense of taxpayers, other electricity users and the Sacramento and Colorado Rivers. Western must seize the opportunity and correct its costly practices. Western must pursue river flows and dam operations—or removal—to protect the environment and restore the well being of those species threatened or endangered by the dams. Western must also offer tiered, market-based rates to eliminate the unfairness and inefficiency in the current system.

Response: As previously noted, Western's rates are not subsidized. Western markets cost-based hydroelectric resources, which are relatively inflation resistant as compared to non-hydro generation due to the absence of fuel costs. In addition, Western has no responsibility to meet load growth with relatively expensive additional power. Western's hydropower resources are reasonably priced due to these factors, and promote yardstick competition.

The generating agencies, such as the Bureau of Reclamation and the Corps of Engineers, have the responsibility to pursue changes in river flows and dam

operations and to consider dam removal. Western has anticipated the possible reoperation of dams which impact threatened and endangered species by reserving the right to adjust our marketable resources in response to changes in hydroelectric operations. In addition, Western's customers have funded millions of dollars in environmental mitigation and study expenses.

Western does not have the legal ability to depart from cost-based rates in the manner suggested.

Comment: For our distribution cooperative, in years where we have a positive margin, that margin is allocated to the member-owners and placed in the member's capital credit account. The Board of Directors annually reviews that account and the financial condition of the cooperative to determine the appropriate amount of capital that should be returned to the membership.

Response: This comment demonstrates how the economic benefits of a locally-owned public power cooperative are returned to consumers rather than flowing to other beneficiaries.

Comment: The Sierra Nevada Region analyzes each preference customer's rates on an ongoing basis and continually stresses the requirement that rates be held as low as possible. In addition, Western requires an annual update of each entity's integrated resource plan and provides valuable feedback on resource utilization and optimization. The SNR also conducts several customer meetings annually, where such topics as customer rate setting are discussed.

Response: This comment is accurate. Western's CRSP Customer Service Center also provides similar services except that more individual customer meetings are held, as opposed to several meetings each year with all customers.

Comment: Western's notice does not explain what is meant by ''full economic benefits of preference power.'' Is it Western's goal to ensure that the difference between the rate that Western charges and the costs of replacement power remains with the end users served by the utility? If that is the case, we generally agree that it is appropriate that the full economic benefits of preference power should be reserved for Western's customers' native load.

Response: This comment accurately reflects Western's goal.

Comment: Western should require all successful bidders for preference power to pass on to qualified end users (based on income or their nature as public institutions) the savings, if any, associated with the purchase of Western power as compared to other power supply sources.

Response: Western agrees that the benefits of the hydroelectric resources we market should flow to the consumer. This occurs almost by definition, as Western's firm power customers are nonprofit and have no shareholders.

Comment: Those customers who qualify as end use preference entities should at a minimum be guaranteed a ''most favored'' customer economic treatment.

Response: As no rationale has been advanced in support of this comment, Western will not adopt it.

Comment: Once vertical dis-aggregation occurs, Western must have procedures in place to ensure that end users—not distribution cooperatives or municipals—receive these allocations.

Response: Distribution cooperatives and municipal utilities are preference entities eligible to purchase power from Western. Should the form of these customers change, in response to industry deregulation or for other reasons, Western will be able to address issues of who should receive the allocation at that time. In the meantime, cooperatives and municipal utilities are required by contract to distribute the benefit of Western's power to consumers.

Comment: Western's mission is not one of being a consumer advocate.

Response: Western is concerned that consumers receive the benefit of our allocations.

Question

5. Should a distribution utility be permitted to transmit the economic benefits of preference power exclusively to industrial and/or commercial end-users? Conversely, should a distribution utility be required to pass on the benefits of preference power exclusively to a certain class of customers such as residential or small business?

A. Administrative/Staffing Experience

Comments: Western does not have the staffing or historic expertise to do retail rate design. Rate design issues are complex, controversial and disruptive and are best addressed locally and not by the Federal Government. Western should not change its role from that of a wholesaler of power.

Adding onerous restrictions and compliance requirements does nothing to promote Western's mission and adds additional costs to the rates.

The resources that we purchase from our generation and transmission cooperative consist of Western power and as well as other sources of power supply. The rate we are charged is a blend. Distribution of the benefits of Western hydropower exclusively to a particular class of consumers would be complicated by this existing billing practice.

Response: Western has no broad expertise in the diverse retail rate design laws and policies within our 15-State service territory, as our role is one of a wholesaler of power. Even if Western wanted to monitor retail rate design, there is no guarantee that Congress would provide the funding necessary to carry out Western's new role.

B. Discrimination

Comments: A distribution utility should not be permitted, or required, to transmit the economic benefits of preference power exclusively to industrial and/or commercial end users. The intent underlying preference power was for the benefits to flow equally to all the customers served by the entity receiving the allocation. Rural communities will not survive in an atmosphere of fragmentation.

Allocations of Federal power exclusively to a particular customer class would conflict with nondiscriminatory rate making principles used by consumer-owned utilities.

Western should not start a class war. Teddy Roosevelt would sit upright in his grave if he thought public resources would be devoted to big business. No volume discounts should be provided to large corporations.

There does not seem to be any policy basis for discriminating between residential, small business, and commercial end users, so long as the allocation serves the historic purposes of preference law.

Western's policy prohibits discrimination among classes. Western's existing customers have adhered to the longstanding policy of no discrimination.

Response: Western has no definite policy on retail rate design. Nor does Western require that the benefits of an allocation of Federal power be provided to one class of consumers at the expense of others. Retail rate design is typically done at the local level, in accordance with a cost of service study or other State or local policy goal. Western sees no need to dictate matters that are best determined at the local level.

C. Legal

Comment: Adoption of the policy suggested by this question interferes with States rights and violates the Tenth Amendment.

Response: For the same reasons set forth in response to a similar comment

on the fourth Notice of Inquiry question, no violation of the Tenth Amendment would take place.

Comment: Western's authorizing statutes grant it no power to review the rates of its customers or to identify some consumers as being more or less deserving of the benefits of Western's power.

Response: Applicable policy requires that power be sold at ''the lowest possible rates to consumers'' without direction to favor one customer class over another. As Western does not believe it to be good policy for a Federal agency to get involved in local decision making on rate design issues, there is no need to address the question of whether Western possesses the legal authority to do so.

Comment: The Second Circuit Court of Appeals has faced the argument that preference power should be furnished to municipal utilities for resale to only domestic and rural consumers, not to industrial or commercial consumers. The Court ruled that if ''Congress had wanted to restrict resale to domestic and rural consumers it could easily have done so simply by stating that the power was to be made available to public bodies 'for resale only' to such consumers.'' The Court also held that Congress ''believed that all interests could best be served by giving the local entities the right to decide on the ultimate retail distribution of the preference power sold to them.'' *Port Authority of the State of New York* v. *FERC,* 743 F. 2d 93, 104–05 (2d Cir. 1984).

Response: This case is based on the Niagara Project Power Act, and a FERC license issued to the Power Authority of the State of New York, pursuant to that act. Neither the Act, which contains a narrow definition of preference entity as compared to Reclamation Law, nor the terms of the FERC license are applicable to Western.

Comment: DOE cannot legally impose such restrictions on the end user's consumption of power delivered by a preference customer. Congress has already spoken to this issue, and determined that decisions about how power should be allocated within a preference customer's community are local in nature.

Response: While Western has broad authority to determine the conditions under which power will be sold, Western agrees that the decision is appropriately local in nature.

D. Local Control

Comments: Local rates are set in an open public process. Local government already addresses the issue of equity between small and large customers by its very structure. These institutions have a relatively small electorate, easy and direct access to their representatives and periodic elections. The effect of this democratic structure is that residents tend to have a much larger say in the decision-making process of their local utility than a customer of an IOU. If an issue arose about rates or cost allocations, residents would have to be convinced of the merits of a particular resolution to the issue. This is a more considered and responsive way to address the implications of the open market.

One of the benefits of public power is local control. Our utility is a relatively new public power entity and our customers have a keen memory of how badly they were treated when decisions about their services were made remotely. If Western ever elected to get involved in this level of detail, the customers our board serves would be disadvantaged. Most of those customers could not afford the time and expense to travel to Sacramento, much less Denver or Washington, DC, to voice their concerns.

Distribution utilities that receive preference power are governed by either elected boards or councils. Rates are currently set pursuant to cost-of-service studies, and customer classes are assigned costs on this basis. If a distribution utility were to change their rate design method, open, public rate hearings must be held as part of the rate approval process.

Since Western is not accountable to local voters, Western should not strive to intervene in local decision making. Given a choice, I cannot imagine that our residents or business owners would prefer to have rates established by a Federal agency.

Response: Western agrees that retail rate design is appropriately a local decision.

Comment: Western should not become a Federal public utilities commission. Federal regulations simply cannot embrace the wide variety of local conditions that exist in Western's service territory. Why should DOE micro-manage local decisions, when in the past there has been an excellent history of passing the full economic benefits on to end users? Absent a clear showing of abuse, Western should not involve itself in these uniquely local issues.

Response: It is not good policy for a Federal power wholesaler to make decisions on retail rate design.

E. Policy

Comment: Western is in no position to allocate benefits or force a distribution utility to allocate benefits among customer classes. Each distribution utility has a varied mix of customer classes and economic situations. Each of them has different statutory mandates as creatures of the States in which they were created. Western is ill-equipped to compile and absorb the nuances of State law in 15 States concerning local government and electric cooperative mandates. To the extent that adoption of any change in Western policy would interfere with State and local mandates, Western does not have the authority to do so and should not seek it.

Response: The design of retail rates is appropriately determined at the local level. The diversity and complexity of State and local standards and policy on this issue would make the establishment of a cohesive Federal policy difficult.

Comments: Western should ensure that the full economic benefits of preference power are passed to residential and small business. In a competitive market, these two classes of customers will not have the expertise to locate and arrange for delivery of least cost power.

Preference should remain as originally designated, for the primary use of residential and small business consumers.

The benefits of Federal power should be passed on to residences and small businesses by the distribution utility. Traditionally, distribution utilities have melded their low-cost Federal power with other sources and most times, through rate structures, the big power users received most of the benefits.

The economic benefits of preference power should be enjoyed by all customer classes equally based on the cost to provide service to the customer.

The distribution utility should not slight or reward any class of customers. Preference power benefits should be shared and shared alike throughout the customer classes.

Rate structures vary from cooperative to cooperative, and reflect what is appropriate for that cooperative and that community. A centralized, one-size-fits-all approach from Western, however well intentioned, is a poor substitute for a deliberative democratic approach exercised by locally elected officials.

Response: Rate design is appropriately a local choice.

Comment: An underlying concern appears to be that Federal power creates a competitive advantage for its consumer-owned recipients. However,

many of Western's customers, due to their size or location, pose no competitive threat to other market participants.

Response: Western agrees.

Comment: Western should only require distribution utilities to show the economic benefit of preference power as well as other sources of power in their retail rate making criteria.

Response: Western's contracts contain language dealing with the distribution of the benefits of Western's power. Under current standard language in Western's contracts, the customer ''agrees that the benefits of firm electric power or energy supplied under the contract shall be made available to its consumers at rates that are established at the lowest possible level consistent with sound business principles, and that these rates will be established in an open and public manner. The Contractor further agrees that it will identify the costs of firm electric power or energy supplied under the contract and power from other sources to its consumers upon request. The Contractor will demonstrate compliance with the requirements of this provision to Western upon request.''

Comment: The purpose of the preference law is to provide power for public purposes and to help provide economic development for under served populations. Each preference customer should be required to show Western how it is carrying out the historic preference power mission in order to be eligible for an allocation.

Response: As our customers are already carrying out the purposes of preference law, Western sees no reason to adopt a litmus test for its customers as a condition for receipt of an allocation. If a customer is not acting in accordance with law or contractual provisions, Western has the remedy to address the situation.

Comment: Federal intervention is not necessary because of market pressure to prevent ''cost shifting'' among customer classes.

Response: Competition in the marketplace could well influence rate design decisions made by local utilities.

Comment: The Energy Policy Act clearly set forth a Federal intent to functionally separate generation from distribution. As a result, cooperative or municipal systems should no longer be the recipients of Federal preference allocations or involved in determining how Federal benefits from power sales are allocated to the end use customer.

Response: The Energy Policy Act opened up the regulated transmission grid to wholesale access, but did not mandate functional separation or modify preference law. Some unregulated entities (such as Western) have proceeded with separation of merchant and reliability functions because it serves their policy goals. However, public power utilities are not subject to any requirement to separate their functions unless Congress amends existing law.

Even if public power utilities were to separate functions, as a matter of law or local policy choice, there is no reason why this would impact continued purchase of power from Western. The negotiation of contracts and administration of the sale of power would be the responsibility of employees within the customer's function responsible for sales to retail consumers.

Comments: Preference should be altered precisely because it creates a nonsensical distinction among different groups of Americans. The decision to confer preference benefits on one class of customers rather than another is arbitrary and inappropriate for a government agency. Western should no longer stand against more than 200 years of economic research clearly demonstrating that the public is best served by free markets.

We support the extension of CVP resources to existing customers notwithstanding our general skepticism about electricity prices that fail to internalize key economic and environmental costs. In electricity markets, decades of empirical evidence indicate that price signals are not the only nor necessarily the most effective way to elicit long-term societal benefits.

Response: Selling power generated from public assets to consumer-owned public entities is neither arbitrary nor nonsensical. The statement about 200 years of economic research is unsupported by any specific citations, so Western cannot evaluate the merit of any such research. Western agrees that societal benefits may not be addressed appropriately by the marketplace.

F. Western's Role

Comments: Western's involvement in designating retail customer recipients could give it regulatory authority that is not warranted. The basic purpose of retail access is to allow decisions to be made at the local and consumer level, not to create a Federal template.

AB 1890 recognized that retail rate making for nonprofit utilities is best left to the local governing body that answers to its own citizens. This is not the time nor is there reason to replace the efficiency and responsiveness of local control with the inefficient command and control of the Federal Government.

Response: The better policy is to retain retail rate design at the local level, where State and local issues can be best addressed.

Question

6. Should a distribution utility be required to offer retail access to its distribution customers as a condition of receiving a preference power allocation in the future?

A. California Law

Comments: Such a policy would be inconsistent with AB 1890 that establishes industry deregulation in the State of California. AB 1890 allows the retail access decision to be made at the local level. Northern California customers are complying with this State law.

California restructuring legislation encouraged consumer-owned utilities to offer retail access, but left the decision up to the local governing body that is elected by those very same consumers. Intervention by the Federal Government on this matter would undermine the democratic process.

AB 1890 adequately addresses retail access in California and the Federal Government should not attempt to usurp the retail competition already in place. We strongly oppose Western's intervention into our municipal utility's prerogatives under California State law.

Response: The policy of the Clinton Administration, as reflected in the Administration's proposed electric utility restructuring legislation, allows each State and unregulated utility to opt out of retail competition. Western will not adopt a policy that is inconsistent with this proposed legislation.

B. Direct/Indirect

Comment: Imposing such a condition attempts to accomplish indirectly what cannot be achieved directly under existing law. Congress has not forced retail choice on States directly.

Response: The Clinton Administration has proposed legislation to deal with this situation that preserves State and unregulated utility choice. Western will not require retail competition indirectly as a condition of its power sales contracts.

Comment: As a matter of State law, some preference customers will not be able to impose a retail competition plan in order to obtain an allocation.

Response: Western recognizes that some of its customers cannot legally adopt retail access as a matter of State law. Attempting to require such a policy as a condition of Western's power sales contracts would place some customers in an untenable position.

C. Equity

Comment: A retail access mandate for customers now seeking a contract extension is discriminatory, because it violates the precedent set in the Pick-Sloan renewals and would apply currently only to customers of the Colorado River Storage Project and the Central Valley Project.

Response: Western often implements new policies in a staged manner, as its marketing plans and contracts are effective for different time periods.

D. Legal

Comment: This restriction would be a violation of existing Federal law and is beyond the reach of Western absent congressional authorization. It would also interfere with decision making by both State and local policy makers. For example, Montana law allows cooperatives the option to decide whether to ''opt in.'' Adoption of this policy by Western would undermine the policy choice made by the State of Montana.

Response: While Western has broad authority to determine the conditions under which power will be sold, Western agrees that the decision to embrace retail wheeling has historically been local in nature. Western's policies should neither force retail wheeling in States that have rejected it nor impede the adoption of retail wheeling in jurisdictions that have embraced it.

Comments: Do not set up a conflict between Federal law and California law. This would be the epitome of big brotherism. An affirmative answer to this question would interfere with States' rights and violate the Tenth Amendment to the United States Constitution.

In some instances, any attempt to force a Federal retail access template on Western customers would be unconstitutional as a violation of the Tenth Amendment to the United States Constitution. In particular, Western cannot interfere with the governmental mission of its customers as defined in State laws and constitutions.

Response: For the same reasons set forth in response to a similar comment on the fourth Notice of Inquiry question, no violation of the Tenth Amendment would take place.

Comment: Such a requirement would be inconsistent with the intent of California's AB 1890 and with the current Administration policy of flexible mandate.

Response: Western agrees with this comment.

Comment: Imposition of such a requirement would constitute a ''taking'' of property that would result in a liability for compensation by the Federal Government.

Response: There is no entitlement to Federal power in the absence of a contract. Since the sale of power is a sale of government property, no taking will occur.

Comment: The Energy Policy Act of 1992 makes it clear that the U.S. Congress did not intend for retail issues to be dealt with at the Federal level. The FERC was denied jurisdiction over transmission access at the retail level in favor of State jurisdiction. There has been no significant indication that the Congress has changed its mind. Moreover, legislation drafted by the DOE and introduced in the 105th Congress would continue the State's dominant role in retail access considerations. Western does not now have, and probably will not get, authority to attempt to leverage retail access.

Congress has given local entities ''the right to decide on the ultimate retail distribution of the preference power sold to them.''

Response: FERC has limited jurisdiction to order retail wheeling under the Energy Policy Act of 1992. The policy of the Clinton Administration, as reflected in the Administration's proposed electric utility restructuring legislation, allows each State and unregulated utility to opt out of retail competition. Western will not adopt a policy that is inconsistent with this proposed legislation.

E. Local Control

Comment: Let communities decide whether, when, and how they will manage direct access. Our municipal utility is planning to open up direct access because it is good for the community. Each community faces a similar choice, and they will act in the best interests of those they serve.

Response: The policy of the Clinton Administration, as reflected in the Administration's proposed electric utility restructuring legislation, allows each State and unregulated utility to opt out of retail competition. Western will not adopt a policy that is inconsistent with this proposed legislation.

F. Policy

Comment: There is no logical nexus between Federal power allocations and retail access. The Congress has not determined that retail access is a sine qua non of electric utility industry restructuring.

Response: Congress has not established such a nexus.

Comment: Federal intervention in local access matters as a condition of receiving a power allocation would not be beneficial. Federal intrusion into decision making aspects of retail access determinations smacks of Federal social central planning, which Western and DOE should not promote. Intervention by the Federal Government on this matter, especially on a piecemeal basis through a marketing plan of a limited Federal resource, would be totally inappropriate.

Response: A comprehensive approach to this issue is preferable to a piecemeal approach.

Comment: The elected governing body of a distribution utility receiving an allocation from Western may decide that it is in the best interests of its customers to not offer retail access until some time in the future, or not at all. The newly formed markets for power are still immature and it may be some time before truly competitive markets are accessible to all customers. In our case, the decision will be made in an open, public forum where retail customers can voice their opinion to an elected city council. If the city council decides that it is in the best interests of a city's customers for it to remain a full service public power utility, the customers of this utility should not be penalized by not being eligible for future power allocations.

Response: The decision to open up markets to retail competition is best made locally. Western's policies should neither force retail wheeling in States that have rejected it nor impede the adoption of retail wheeling in jurisdictions that have embraced it.

Comment: Adoption of this policy would have unintended consequences, such as migration of power out of States that decline to adopt retail access. Preference customers in States that do not permit retail access could lose their preference power, even if those customers are using their allocations to service the types of end users that the Notice indicates should be receiving the full economic benefit of preference power.

Response: Western agrees that the effect of the policy suggested by the question could cause power to migrate to customers in States that have adopted retail access.

Comment: Whether retail access is good or bad remains to be seen. We believe that in the final analysis it will depend on the size and location of the end user. Western's power allocations should neither help nor hurt retail access. The draft 2004 CVP marketing plan provides enough flexibility for the benefits of CVP power to be realized,

regardless how retail wheeling evolves. We urge Western to rise above those who seek to destroy public power, or who seek to restructure the electric industry so that profits can be made off the public's resources.

Response: The policy of the Clinton Administration, as reflected in the Administration's proposed electric utility restructuring legislation, allows each State and unregulated utility to opt out of retail competition. Western will not adopt a policy that is inconsistent with this proposed legislation.

Comment: The impact of adoption of this proposed change in policy would impact supplemental suppliers much more than Western or Western's preference customers.

Response: Western needs to be aware of the impact of its policies on supplemental suppliers.

Comments: There are many legitimate reasons why retail competition might not be adopted by a State, including a concern that losers are likely to be residential, low income, senior citizens and other small users. Market power concerns and availability of reliable power supply also may cause a State to reject retail competition. These legitimate concerns should not be held hostage by a threat of losing a Federal power allocation.

There is no evidence that small customers have benefitted from retail wheeling. We don't understand why Western would want to force retail access where it is not allowed to the potential detriment of our small customers.

Response: The policy of the Clinton Administration, as reflected in the Administration's proposed electric utility restructuring legislation, allows each State and unregulated utility to opt out of retail competition. Western will not adopt a policy that is inconsistent with this proposed legislation.

Comments: Mandating retail access by preference customers now seeking a contract extension is inconsistent with the restructuring policy of the Clinton Administration, which advocates a flexible mandate for States and nonregulated utilities. Western should not force retail wheeling in States that have rejected it.

This should only be done by an act of Congress which would mandate retail access. What logic would there be to force retail access if neither the State nor Federal law requires such action?

Response: Western agrees that the question suggests an approach that goes further than the Clinton Administration's policy.

Comment: Regulation by independent commission or elected body has been a widely accepted substitute for regulation by market forces in the electricity business for nearly 100 years. Although there are experiments being conducted in a very limited number of States and locales concerning the reintroduction of the market as a form of regulation, the wisdom of this approach is far from proven.

Response: Although open access to high voltage transmission and competition in the sale of wholesale power are prevalent, Western agrees that many States have not extended these policies to retail load.

Comment: It is the stated policy of the Clinton Administration that customers should be allowed to benefit from the ability to choose their own electricity supplier, but also permit States and unregulated utilities to opt out of the competition mandate if they find that consumers would be better served by an alternative policy. Western should engage in the same balancing act. Customers that operate in States where there is no barrier under State law to retail competition should be required to open up their systems to retail competition as a condition of receiving future allocations. End users of preference power should see their rates remain the same or go down as a result of competition.

Response: Adoption of this comment would not be akin to engaging in the same balancing act as the stated policy of the Clinton Administration. The Administration's policy allows States and unregulated utilities the freedom to choose, while this comment asks Western to deny that right to unregulated utilities within States that adopt retail wheeling for regulated utilities. It is more appropriate for the individual States, and not Western, to consider whether public power utilities should lose their historic right to make decisions locally.

Comments: Distribution utilities serving Indian reservations should be required to offer retail access to it customers within the reservation as a condition of receiving a preference power allocation in the future. Western must not allow the tribes to become landlocked or to be held hostage by others who may have adverse interests to those of a tribe.

A distribution utility should be required to offer retail access to its distribution customers as a condition of receiving a preference power allocation in the future. We believe this requirement will encourage open access for retail distribution customers the same as the transmission and generation customers under the FERC rule. The Navajo Agricultural Products Industry has tried unsuccessfully to have its distribution utility wheel other power to its sprinkler irrigation equipment and a proposed food processing plant. The argument used to discourage open access is that the State of New Mexico legislature has not enacted an open access law similar to AB 1890.

Response: Western plans to allocate power to tribes from project-specific resource pools. If the tribe already is or plans to become a utility, transmission will be available under wholesale transmission access principles. Should the tribe choose not to form a utility, Western is committed to providing the benefits of Federal hydropower to the tribes through other means. This could include retail wheeling where the distribution utility offers this service, or alternatives such as bill crediting when retail access is unavailable. Western has adequate flexibility to deliver the benefits of Federal hydropower to tribes without mandating retail access as a contractual condition for existing customers. In addition, adoption of this policy would be incomplete in its scope in States that have not adopted retail wheeling, as it would provide no benefits to tribes served by entities that are not Western customers.

Comment: Wherever a utility receiving preference power seeks to sell retail power to new customers in service territories and communities presently being served by other utilities, that utility should be required to offer retail access to its distribution customers.

Response: The policy of the Clinton Administration, as reflected in the Administration's proposed electric utility restructuring legislation, allows each State and unregulated utility to opt out of retail competition. Western will not adopt a policy that is inconsistent with this proposed legislation.

Comment: The opening of retail access for preference customers is far more complex than suggested by this question. The reasons why no municipalities have joined the California ISO are (1) existing tax exemptions on already existing bonds could be jeopardized, and (2) municipalities would receive little or no credit for turning over to the ISO transmission assets that are not directly connected to their load centers, such as the municipal interest in the California-Oregon transmission system. A municipal utility joining the California ISO could be risking great damage to their system. This is not an outcome to be furthered by Western as the price for an allocation of preference power.

Response: The complexities of this issue must be taken into account.

Comment: Western should attempt to maintain comparability with regulated utilities in the area.

Response: This is a role more properly exercised by the States.

Comment: We believe that customers with distribution systems should be encouraged to share their facilities with other customers whenever it is mutually beneficial.

Response: Western agrees.

Comment: All distribution entities, including cooperative and municipal utilities, must be required to offer retail access, whether they receive an allocation of preference power or not. We must begin to view the industry not in a way that asks which entity gets what preference, but rather in terms that power supply has been mandated to be a competitive enterprise while distribution ought to remain a regulated monopoly.

Response: Western has no ability to accomplish this suggestion. Only Congress or State legislatures have the power to adopt a broad policy of widespread applicability.

Comment: If Western only made allocations to distribution utilities that offer retail access, it would speed the adoption of retail access and free up some allocations from distribution utilities who chose to forego their Western allocations rather than provide retail access. However, making Western allocation renewal conditional on distribution utilities' offers of retail access would only offer a level playing field if FERC hydro license holders nationwide were also stripped of their licenses if they did not offer direct access by 2005.

Response: Western understands this issue of equity in implementing retail access.

Comment: This question suggests that Western allocations ought to be held as ransom for retail access. Our utility began offering retail access to all customers in January of 1998. Our access is not restricted by competitive transmission charges or similar charges imposed virtually every time retail access has been offered or contemplated by IOUs. To date, not one of our customers has switched suppliers. Our customers are small and sparsely distributed. Those seeking to gain by providing retail access and attacking public power know they cannot profit by providing our customers a better deal than we provide.

Response: Western believes this comment demonstrates that small rural consumers may not benefit from adoption of retail access.

G. States

Comment: The issue of retail access has always been one for the States to decide. If the decision of the State is to be overridden, the entity that must do so is Congress, not Western.

Response: Western agrees that it should not act inconsistently with the decision making of States.

Comment: A vast majority of the States located within Western's marketing area have not yet elected to proceed with restructuring. Congress has adopted no legislation encouraging, much less mandating, restructuring of the utility business. The only Federal activity to date has been by FERC, an independent regulatory agency whose authority to order restructuring of the wholesale electric energy market is currently under legal challenge.

Response: Western agrees.

Comment: Requiring a retail access mandate assumes retail access is good for all consumers. This is not true, as 23 State Public Utility Commissions wrote to Congress recently urging retail access not be mandated because they believe retail rates in their States would increase significantly as a result. What about States like Idaho/Oregon that already have low rates and want to keep it that way by rejecting retail wheeling?

Response: States that already enjoy low cost power may be cautious about adopting retail access laws that might place upward pressure on local power rates.

H. Western's Role

Comment: The Public Power Council opposes any effort to expand the authority of the PMAs and encroach on the local decision-making authority of PMA customers. In the Northwest, the local autonomy of consumer-owned utilities is appropriately respected. BPA does not regulate customer rates or rate design. Similarly, BPA does not micro-manage the conservation activities of its customers—activities that are required by contract. We are particularly concerned that the Notice contemplates tying contract allocations to implementation of retail competition. This proposal runs counter to the ''flexible mandate'' endorsed by the Clinton Administration that respects the local autonomy of consumer-owned utilities.

Response: Western agrees that the local autonomy of consumer-owned utilities must be respected.

Dated: June 10, 1999.

Michael S. Hacskaylo,

Administrator.

[FR Doc. 99–16019 Filed 6–24–99; 8:45 am]

BILLING CODE 6450–01–P

federal register

Friday
June 25, 1999

Part IV

Department of Education

34 CFR Part 602

The Secretary's Recognition of Accrediting Agencies; Proposed Rule

DEPARTMENT OF EDUCATION

34 CFR Part 602

RIN 1840–AC80

The Secretary's Recognition of Accrediting Agencies

AGENCY: Department of Education.

ACTION: Notice of proposed rulemaking.

SUMMARY: The Secretary proposes to amend the regulations governing the Secretary's recognition of accrediting agencies to implement provisions added to the Higher Education Act of 1965, as amended (HEA), by the Higher Education Amendments of 1998. The Secretary recognizes accrediting agencies to assure that those agencies are, for HEA and other Federal purposes, reliable authorities regarding the quality of education or training offered by the institutions or programs they accredit.

DATES: We must receive your comments on or before August 24, 1999.

ADDRESSES: Address all comments about these proposed regulations to Karen W. Kershenstein, U.S. Department of Education, 400 Maryland Avenue, SW., room 3915, ROB–3, Washington, DC 20202–5244. If you prefer to send your comments through the Internet, use the following address: karen__kershenstein@ed.gov

If you want to comment on the information collection requirements in these proposed regulations, you must send your comments to the Office of Management and Budget at the address listed in the Paperwork Reduction Act section of this preamble. You may also send a copy of these comments to the Department representative named in this section.

FOR FURTHER INFORMATION CONTACT: Karen W. Kershenstein. Telephone: (202) 708–7417. If you use a telecommunications device for the deaf (TDD), you may call the Federal Information Relay Service (FIRS) at 1–800–877–8339.

Individuals with disabilities may obtain this document in an alternate format (e.g., Braille, large print, audiotape, or computer diskette) on request to the contact person listed in the preceding paragraph.

SUPPLEMENTARY INFORMATION:

Invitation to Comment:

We invite you to submit comments regarding these proposed regulations. To ensure that your comments have maximum effect in developing the final regulations, we urge you to identify clearly the specific section or sections of the proposed regulations that each of your comments addresses and to arrange your comments in the same order as the proposed regulations.

We also invite you to assist us in complying with the specific requirements of Executive Order 12866 and its overall requirement of reducing regulatory burden that might result from these proposed regulations. Please let us know of any further opportunities we should take to reduce potential costs or increase potential benefits while preserving the effective and efficient administration of the accrediting agency recognition process.

During and after the comment period, you may inspect all public comments about these proposed regulations in room 3915, ROB–3, 7th and D Streets, SW., Washington, DC, between the hours of 8:30 a.m. and 4:00 p.m., Eastern time, Monday through Friday of each week except Federal holidays.

Assistance to Individuals With Disabilities in Reviewing the Rulemaking Record

On request, we will supply an appropriate aid, such as a reader or print magnifier, to an individual with a disability who needs assistance to review comments or other documents in the public rulemaking record for these proposed regulations. If you want to schedule an appointment for this type of aid, please call (202) 205–8113 or (202) 260–9895. If you use a TDD, you may call FIRS at 1–800–877–8339.

Negotiated Rulemaking Process

Section 492 of the HEA requires that, before publishing any proposed regulations to implement programs under Title IV of the Act, the Secretary obtain public involvement in the development of the proposed regulations. After obtaining advice and recommendations, the Secretary must conduct a negotiated rulemaking process to develop the proposed regulations. All published proposed regulations must conform to agreements resulting from the negotiated rulemaking process unless the Secretary reopens the negotiated rulemaking process or provides a written explanation to the participants in that process why the Secretary has decided to depart from the agreements.

To obtain public involvement in the development of the proposed regulations, we published a notice in the **Federal Register** (63 FR 59922, November 6, 1998) requesting advice and recommendations from interested parties concerning what regulations were necessary to implement Title IV of the HEA. We also invited advice and recommendations concerning which regulated issues should be subjected to a negotiated rulemaking process. We further requested advice and recommendations concerning ways to prioritize the numerous issues in Title IV, in order to meet statutory deadlines. Additionally, we requested advice and recommendations concerning how to conduct the negotiated rulemaking process, given the time available and the number of regulations that needed to be developed.

In addition to soliciting written comments, we held three public hearings and several informal meetings to give interested parties an opportunity to share advice and recommendations with the Department. The hearings were held in Washington, DC, Chicago, and Los Angeles, and we posted transcripts of those hearings to the Department's Information for Financial Aid Professionals web site (http://www.ifap.ed.gov).

We then published a second notice in the **Federal Register** (63 FR 71206, December 23, 1998) to announce the Department's intention to establish four negotiated rulemaking committees to draft proposed regulations implementing Title IV of the HEA. The notice announced the organizations or groups believed to represent the interests that should participate in the negotiated rulemaking process and announced that the Department would select participants for the process from nominees of those organizations or groups. We requested nominations for additional participants from anyone who believed that the organizations or groups listed did not adequately represent the list of interests outlined in section 492 of the HEA. Once the four committees were established, each negotiating committee met to develop proposed regulations for several days each month, from January through May.

The proposed regulations contained in this notice of proposed rulemaking (NPRM) reflect the final consensus of the negotiating committee, which was made up of the following members:

American Association of Collegiate Registrars and Admissions Officers.
American Association of Community Colleges.
American Association of Cosmetology Schools.
American Association of State Colleges and Universities.
American Council on Education.
Association of American Universities.
Association of Jesuit Colleges and Universities.
Career College Association.
Council for Higher Education Accreditation.

Council of Recognized National Accrediting Agencies, consisting of the Accrediting Bureau of Health Education Schools, the Accrediting Commission of Career Schools and Colleges of Technology, the Accrediting Council for Continuing Education and Training, the Accrediting Council of Independent Colleges and Schools, the Council on Occupational Education, the Distance Education and Training Council, and the National Accrediting Commission of Cosmetology Arts & Sciences.
Council of Regional Accrediting Commissions, consisting of the Commission on Higher Education of the Middle States Association of Colleges and Schools, the Commission on Institutions of Higher Education and the Commission on Technical and Career Institutions of the New England Association of Schools and Colleges, the Commission on Institutions of Higher Education of the North Central Association of Colleges and Schools, the Commission on Colleges of the Northwest Association of Schools and Colleges, the Commission on Colleges of the Southern Association of Colleges and Schools, and the Accrediting Commission for Senior Colleges and Universities and the Accrediting Commission for Community and Junior Colleges of the Western Association of Schools and Colleges.
Education Finance Council.
Legal Services Counsel (a coalition).
National Association for Equal Opportunity in Higher Education.
National Association of College and University Business Officers.
National Association of Independent Colleges and Universities.
National Association of State Student Grant and Aid Programs/National Council of Higher Education Loan Programs (a coalition).
National Association of State Universities and Land-Grant Colleges.
National Association of Student Financial Aid Administrators.
National Direct Student Loan Coalition.
National Women's Law Center.
State Higher Education Executive Officers Association.
The College Board.
The College Fund/United Negro College Fund.
United States Department of Education.
United States Student Association.
US Public Interest Research Group.

Under committee protocols, consensus meant that there was no dissent by any member of the committee. Thus, the proposed regulations in this document have been agreed to by each of the organizations and groups listed as members of the committee.

To expedite its work, the negotiating committee established an accreditation subcommittee, which was made up of the following members, in addition to any members of the full committee:

Accrediting Association of Bible Colleges.
Accrediting Commission of Career Schools and Colleges of Technology.
Association of Specialized and Professional Accreditors.
Commission on Higher Education of the Middle States Association of Colleges and Schools.
Commission on Colleges of the Southern Association of Colleges and Schools.

The subcommittee made recommendations to the full negotiating committee, which in turn reached final consensus on the proposed regulations in this document.

Changes From Existing Regulations

The following discussion reflects proposed changes to the existing regulations governing the Secretary's recognition of accrediting agencies. Some of the proposed changes incorporate provisions contained in the Higher Education Amendments of 1998, the most significant of which concern the standards accrediting agencies must have, the timeframe for agencies to come into compliance with the criteria for recognition, and distance education. Other proposed changes are the result of discussion and subsequent consensus among negotiators about how to improve the current regulations by clarifying existing regulatory language and eliminating redundancies. All of the changes are discussed in the order in which they appear in the proposed regulations.

Please note that the proposed regulations differ organizationally from the current regulations because we have rewritten them to comply with Executive Order 12866 and the President's Memorandum of June 1, 1998 on ''Plain Language in Government Writing.'' For your convenience, the Appendix contains a distribution table listing the sections contained in the current regulations and where they may be found in the proposed regulations.

Subpart A—General (§§ 602.1 Through 602.3)

Subpart A of the current regulations contains basic information describing the purpose of the regulations and the definitions that apply. It also contains some requirements agencies must meet if they wish to be recognized. Subpart A of the proposed regulations contains only the basic information about the purpose of the regulations and the definitions that apply. The only significant changes proposed in subpart A relate to some of the definitions contained in § 602.3. These are discussed in the next section.

Section 602.3 What Definitions Apply to This Part?

Most of the definitions in the proposed regulations are the same as the ones in the current regulations. Substantive changes are proposed for two definitions, however, and the proposed regulations contain three new definitions.

Adverse accrediting action. The proposed regulations exclude probation and show cause from the type of action currently included in the term ''adverse action.'' Like § 602.26(c) of the current regulations, § 602.20 of the proposed regulations requires recognized agencies to take adverse action within a specified timeframe if their review of an institution or program indicates that it is not in compliance with agency standards. Including interim actions such as probation and show cause as ''adverse actions'' permits noncompliant institutions and programs to retain accreditation or preaccreditation well beyond the maximum timeframes the regulations prescribe. Under the proposed regulations, failure to achieve compliance within the prescribed timeframe would result in denial, withdrawal, suspension, revocation, or termination of accreditation or preaccreditation unless the agency extends the timeframe for good cause.

Branch campus. Section 496(c)(3) of the HEA requires an institutional accrediting agency whose accreditation enables the institutions it accredits to establish eligibility to participate in Title IV, HEA programs to conduct a site visit within six months to each branch campus an institution establishes. While the 1998 amendments did not change the requirement for site visits within six months of the establishment of a branch campus, the House-Senate Conference Report noted that the definition of the term ''should not be so broad as to be overly burdensome on agencies and institutions.''

The current regulations define ''branch campus'' to include ''any location of an institution, other than the main campus, at which the institution offers at least 50 percent of an educational program.'' A significant number of locations met this definition. Consequently, agencies had to conduct a site visit within six months of the

establishment of each of these locations, even if the institution had a proven track record in establishing additional locations that met or exceeded the agency's standards. This proved to be burdensome and costly to both agencies and institutions. In addition, this portion of the definition of ''branch campus'' diverged from the definition of the same term in the institutional eligibility regulations contained in 34 CFR part 600.

The proposed regulations change the definition of ''branch campus'' used in 34 CFR part 602 to conform to the definition of the term in 34 CFR part 600 and require agencies to conduct site visits to additional locations that offer at least 50 percent of an educational program under certain circumstances. The specific circumstances are discussed under § 602.22.

Distance education. The current regulations do not use this term. In the accreditation section of the 1998 amendments, however, there are two references to distance education. The first, found in section 496(a)(4) of the HEA, requires that an agency consistently apply and enforce standards that ensure that the courses or programs offered by an institution, ''including distance education courses or programs,'' are of sufficient quality to achieve, for the duration of the accreditation period, the stated objective for which they are offered. The second, found in section 496(n)(3) of the HEA, refers to the scope of recognition the Secretary grants to an agency and states, ''If the agency or association reviews institutions offering distance education courses or programs and the Secretary determines that the agency or association meets the requirements of this section, then the agency shall be recognized and the scope of recognition shall include the accreditation of institutions offering distance education courses or programs.''

The proposed regulations adopt the same definition of ''distance education'' as is used in establishing the Distance Education Demonstration Programs in section 488 of the Higher Education Amendments of 1998. The negotiating committee considered whether use of the term ''courses'' in the statutory definition could be misread to exclude programs offered through distance education. The committee concluded, however, that a fair reading of ''courses'' includes programs and is not limited to individual courses. The Secretary agrees with this interpretation.

Scope of recognition. The proposed regulations define a new term, ''scope of recognition.'' The definition would include the description contained in § 602.13(e) of the current regulations about the Secretary's recognition decision. The definition would also address the provision contained in section 496(n)(3) of the Higher Education Amendments of 1998 by adding the agency's accrediting activities related to distance education to the list of items to be referenced by the Secretary in the scope of recognition awarded to an agency. The proposed definition also states that the Secretary may place a limitation on the scope of an agency's recognition for Title IV, HEA purposes.

Senior Department official. Not used in the current regulations, this term is defined in the proposed regulations as ''the senior official in the Department of Education who reports directly to the Secretary regarding accrediting agency recognition.'' The current regulations use another term, ''designated Department official,'' but in various places this term has meant the Assistant Secretary for Postsecondary Education or, more recently, the Chief Operating Officer; in others, it has meant a member of that individual's staff to whom he or she has delegated certain responsibilities. The use of the term ''designated Department official'' to describe different individuals in the Department has caused some confusion in the current regulations. For this reason, the proposed regulations do not use the term at all. Rather, they establish the responsibilities of Department staff, the National Advisory Committee on Institutional Quality and Integrity, and the senior Department official in different stages of the recognition process. Subparts C and D of the proposed regulations describe the specific circumstances under which the senior Department official makes recommendations regarding an agency's recognition.

Subpart B—The Criteria for Recognition (§§ 602.10 Through 602.28)

With a few exceptions, subpart B of the proposed regulations follows prior law in establishing the criteria for recognition. However, the criteria have been grouped into several subheadings to improve readability. A discussion of each group follows.

Basic Eligibility Requirements (§§ 602.10 through 602.13)

The proposed regulations group under this heading the recognition requirements found in §§ 602.1(b), 602.20, and 602.22 of the current regulations. If an agency seeking initial recognition fails to meet one or more of these basic eligibility requirements, § 602.31 of the proposed regulations authorizes Department staff to recommend to the agency that it withdraw its application for recognition.

Section 602.12 of the proposed regulations changes current requirements related to accrediting experience so that the requirements apply only to agencies seeking either initial recognition or an expansion of their scope of recognition. A recognized agency, by virtue of the fact that the Secretary has recognized it, has already demonstrated its compliance with these requirements and need not be burdened with demonstrating it again if it seeks continued recognition. A new agency, on the other hand, needs to demonstrate that it has accrediting experience in order to be recognized. Similarly, an agency that seeks to expand its scope of recognition needs to demonstrate its experience in the area for which it seeks the expansion.

The proposed regulations also specify the amount of experience required for initial recognition. Specifically, they require a new agency to have conducted accrediting activities, including making accrediting decisions, for at least two years prior to seeking recognition.

In conjunction with the issue of accrediting experience, the Secretary notes that 1998 amendments replace the phrase ''accrediting agency approval'' with ''accrediting agency recognition'' and generally refer to agencies as ''recognized'' rather than ''approved.'' The Secretary believes these changes simply clarify that the Secretary does not ''approve'' agencies; i.e., grant them permission to operate, conduct accrediting activities, and make accrediting decisions. Rather, the Secretary ''recognizes'' them for having demonstrated, as a result of their accrediting experience, that they are in fact reliable authorities regarding the quality of education or training provided by the institutions or programs they accredit.

Organizational and Administrative Requirements (§§ 602.14 and 602.15)

Included under this heading are §§ 602.3 and 602.21 of the current regulations. There are no significant changes to either of these sections in the proposed regulations, although some requirements are either combined to eliminate redundancy or reworded for clarity. For example, the current regulations require agencies to have adequate administrative staff to carry out their accrediting responsibilities effectively and to manage their finances effectively; they also require agencies to have adequate financial resources to carry out their accrediting responsibilities. These requirements are

combined and simplified in the proposed regulations to state that agencies must have adequate administrative staff and financial resources to carry out their accrediting responsibilities.

In another instance, the current regulations require agencies to have ''competent and knowledgeable individuals, qualified by experience and training, responsible for on-site evaluation, policy-making, and decision-making regarding accreditation and preaccreditation status.'' This provision implements the statutory requirement contained in section 496(c)(1) of the HEA that agencies must ensure ''that accreditation team members are well-trained and knowledgeable with respect to their responsibilities.'' However, agencies have not always understood the language in the current regulations to mean that those involved in the accreditation process must be well-trained in agency standards, policies, and procedures. Consequently, the proposed regulations restate the requirement explicitly by calling for agencies to have ''competent and knowledgeable individuals, qualified by education and experience in their own right and trained by the agency on its standards, policies, and procedures, to conduct its on-site evaluations, establish its policies, and make its accrediting decisions.''

Required Standards and Their Application (§§ 602.16 Through 602.21)

Included under this heading are all of §§ 602.24 and 602.26 of the current regulations and some sections in § 602.23. The significant changes in this group of criteria are discussed in the description of each proposed section that follows.

Section 602.16 Accreditation and Preaccreditation Standards

The proposed regulations revise and reorder the list of required accreditation standards found in § 602.26(b) of the current regulations to conform to the list found in section 496(a)(5) of the 1998 amendments. Specifically, the proposed regulations require agencies to have accreditation standards that effectively address the quality of an institution or program in the following areas: (1) Success with respect to student achievement in relation to the institution's mission, including, as appropriate, consideration of course completion, State licensing examination, and job placement rates; (2) curricula; (3) faculty; (4) facilities, equipment, and supplies; (5) fiscal and administrative capacity as appropriate to the specified scale of operations; (6) student support services; (7) recruiting and admissions practices, academic calendars, catalogs, publications, grading, and advertising; (8) measures of program length and the objectives of the degrees or credentials offered; (9) the record of student complaints received by, or available to, the agency; and (10) the institution's record of compliance with its program responsibilities under Title IV of the Act, based on the most recent student loan default rate data provided by the Secretary, the results of financial or compliance audits, program reviews, and any other information the Secretary may provide to the agency.

The significant changes the proposed regulations make to the list of required accreditation standards include the placement of success with respect to student achievement first rather than ninth, the elimination of the standard related to tuition and fees, the inclusion of default rates in the standard related to institutions' compliance with their Title IV responsibilities rather than in a separate standard, and the combination of the two standards that dealt with aspects of program length into a single standard.

In light of the statute's placement of success with respect to student achievement as the first of the required standards, the Secretary believes some discussion of the issue is warranted in this NPRM. Section 496(a) of the HEA requires the Secretary to establish the criteria for recognition and states that those criteria must include ''an appropriate measure or measures of student achievement.'' The Secretary believes that the standards specified in § 602.26(b)(9) of the current regulations and § 602.16(a)(1)(i) of the proposed regulations, which require agencies to have a standard that effectively addresses the success of an institution or program with respect to student achievement, fulfill this statutory requirement.

The Secretary believes that any determination by an accrediting agency that an institution or program it accredits provides quality education or training must be based, in part, on an assessment of the achievement of students enrolled in the institution or program, because the true success of an institution or program is measured by the success of its students. The Secretary further believes that success with respect to student achievement, a measure of educational outcomes, is an important indicator of educational quality, on a par with or even surpassing the more traditional focus on educational ''inputs.''

In concluding this discussion of the required accreditation standard related to success with respect to student achievement, the Secretary wishes to reiterate the comments made on this issue in the appendix to the 1994 regulations:

> An accrediting agency's standard for assessing this area should generally address the success of an institution or program in meeting its educational objectives, as measured by the achievement of its students. Typically under this standard, an agency should require the institution or program to document and assess the educational achievement of students in verifiable and consistent ways, such as student grades, grade point averages, theses or portfolios, the results of admissions tests for graduate or professional school or other standardized tests, transfer rates to institutions offering higher level programs, job placement rates, completion rates, results of licensing examinations, evaluations by employers, follow-up studies of alumni, and other recognized measures of educational outcomes. The agency should also typically require the institution or program to use effectively the information obtained in this manner to improve student achievement with respect to the degrees or certificates offered. Finally, the agency should typically monitor in a systematic way the institution's or program's performance with respect to student achievement, including, as appropriate, completion rates, job placement rates, and pass rates on State licensing examinations, or other appropriate measures of occupational competency, to determine if performance is consistent with both the institution's or program's mission and objectives and any measures the agency may have for institutions' or programs' performance with respect to student achievement. For programs that provide vocational education, agencies should establish quantitative standards for completion rates, job placement rates, and pass rates on State licensing examinations.

Section 602.17 Application of Standards in Reaching an Accrediting Decision

There are no significant changes to this section of the proposed regulations, which basically repeats §§ 602.24(b)(1) and 602.24(b)(2) of the current regulations.

Section 602.18 Ensuring Consistency in Decision-Making

There are no significant changes to this section of the proposed regulations, which basically repeats §§ 602.23(b)(3), 602.23(b)(4), and 602.26(d) of the current regulations.

Section 602.19 Monitoring and Reevaluation of Accredited Institutions and Programs

There are no significant changes to this section of the proposed regulations, which basically repeats §§ 602.24(b)(4)

and 602.24(b)(5) of the current regulations. However, the Secretary wishes to emphasize that accrediting agencies have a responsibility to monitor institutions and programs throughout their accreditation period to ensure that educational quality is maintained. While an agency may determine the policies and procedures it will use to monitor its institutions and programs, those procedures must provide for prompt and appropriate action by the agency whenever it receives substantial, credible evidence from any reliable source that indicates a systemic problem with an accredited institution or program that calls into question the ability of the institution or program to meet the agency's standards. Furthermore, the Secretary expects those policies and procedures to provide an agency with unambiguous authority to act if educational quality is at issue, even if the matters are being reviewed by other bodies, including courts. It is unacceptable for an agency to have as its policy that it will not look into, and take appropriate action based upon, information that comes to its attention through pending third-party litigation.

Section 602.20 Enforcement of standards

There are no significant changes to this section of the proposed regulations, which basically repeats § 602.26(c) of the current regulations.

Section 602.21 Review of Standards

The Secretary's criteria for the recognition of accrediting agencies have long required agencies to maintain a systematic program of review of their accrediting standards. The present statement of the requirement is contained in § 602.23(b)(5) and (b)(6) of the current regulations and emphasizes the need for agencies to carry out a program of review that ensures their standards are valid and reliable indicators of educational quality and relevant to the needs of students. The current regulations do not, however, define ''validity'' and ''reliability,'' and various technical interpretations exist for these terms that, when applied in the context of accrediting agency standards, are frequently misunderstood. Non-Federal negotiators expressed concern that because ''valid'' and ''reliable'' have established meanings in the field of statistics, the current regulations arguably imply that a systematic program of review must inevitably, or even usually, take the form of an extensive statistical analysis. Another problem with the current regulations is that they imply a well-defined conclusion to an agency's systematic program of review, at which point the agency can state with certainty that all of its standards are valid and reliable, when in fact a good systematic program of review is ongoing.

The proposed regulations include two significant changes to address these concerns. First, they avoid altogether the use of the terms ''valid'' and ''reliable'' in describing the requirements for a systematic program of review. Instead, the proposed regulations require agencies to maintain a systematic program of review that demonstrates their standards are adequate to evaluate the quality of education or training provided by the institutions and programs they accredit and relevant to the needs of students. Second, while the proposed regulations leave agencies free to determine the procedures they will follow in evaluating their standards, they require agencies to ensure that their program of review is comprehensive, occurs at regular intervals or on an ongoing basis, examines each standard and the standards as a whole, involves all of the relevant constituencies in the review, and affords those constituencies a meaningful opportunity to provide input into the review.

In proposing to eliminate the word ''reliable'' from this section, the Secretary notes that sections 496(a) and 496(c) of the HEA use the word ''reliable'' in describing agencies that may qualify for recognition. Accordingly, the Secretary has incorporated this concept into § 602.16(a)(i) of the proposed regulations, which describes as ''reliable'' an agency that has standards that effectively address each of the areas the statute requires agencies to address. The Secretary views § 602.16(a)(i) as a crucial provision of the proposed regulations and as accurately conveying the substance of the word ''reliable'' as used in the statute. Because the concept of reliability is already incorporated in § 602.16(a)(i) and because, as previously stated, it has had misleading connotations when used in the context of an agency's review of its standards, the word ''reliable'' has been deleted from § 602.21.

The proposed terminology for § 602.21 strikes a balance between overly prescriptive regulation of agency standards and processes and a requirement that looks only to the agency's review process and not to the substance of the standards. As proposed, § 602.21 places a burden on agencies to demonstrate that their standards are adequate to evaluate quality and relevant to the needs of students. At the same time, the proposed section would eliminate any implication that the program of review must take the form of a statistical analysis.

One other feature of the proposed review process is a requirement that if an agency determines at any point in its systematic program of review that it needs to make changes to its standards, it would have to initiate action within 12 months to make the changes and would have to complete that action within a reasonable period of time. This feature reflects the 1998 amendment to the HEA that sets a general deadline of 12 months for agencies to remedy identified areas of noncompliance.

The proposed procedures for making changes to an agency's standards also provide a more focused description of the notice an agency must provide about its proposed changes and ensure the opportunity for timely input by any person wishing to participate in the process.

Required Operating Policies and Procedures (§§ 602.22 Through 602.28)

Included under this heading are §§ 602.4, 602.25. 602.27, 602.28, 602.29, and 602.30 of the current regulations. The proposed regulations contain several significant changes, as discussed in the following sections.

Site Visits to Additional Locations

As discussed previously under § 602.3, the definition of ''branch campus'' in the current regulations is quite broad. This results in a significant burden being placed on agencies by requiring them to conduct a site visit within six months to each branch campus an institution established. It also places a significant burden, particularly in terms of costs, on institutions that established large numbers of sites that met the broad definition of branch campus.

The negotiating committee discussed at length how to modify the site visit requirement to ease the burden on agencies and institutions and still provide adequate protections to the Department and, ultimately, the students who attend the institutions. The consensus that was reached is reflected in these proposed regulations. Specifically, the proposed regulations redefine branch campus to match the narrow definition in the institutional eligibility regulations in 34 CFR part 600, and current site visit requirements would remain applicable to all locations that meet this definition. However, the proposed regulations provide relief from the burden of the current requirements for site visits to other newly-established

locations that offer 50 percent or more of an educational program by making them subject to evaluation under an agency's substantive change policies. Specifically, the proposed regulations require agencies to have a substantive change policy that addresses the establishment by an institution of these types of additional locations and that includes an analysis of the effect of the additional location or locations on the overall fiscal and administrative capacity of the institution.

Under the proposed regulations, an agency's substantive change policy would have to require the agency to conduct a site visit within six months to an additional location offering 50 percent or more of an educational program if any of three conditions is met. First, the agency would have to conduct a site visit to each additional location if the institution has a total of three or fewer additional locations. The proposed regulations contain this requirement because of the need for an agency to monitor an institution very closely as it begins to operate more than just the main campus; the need for such close monitoring diminishes once the institution has gained experience in establishing effective systems for the administration of multiple sites.

The proposed regulations also require an agency to conduct a site visit within six months of the establishment of an additional location if the agency has any serious concerns about the institution; e.g., if the institution has been placed on warning, probation, or show cause by the agency or is subject to some type of limitation on its accreditation. Finally, the proposed regulations require a site visit within six months to an additional location if the institution has failed to demonstrate that it has either the administrative and fiscal capacity to operate the additional locations it has already established or a proven record of effective educational oversight of additional locations.

Beyond these situations that require agencies to conduct site visits to each additional location an institution seeks to establish, the proposed regulations give agencies flexibility in deciding when to conduct site visits to additional locations. Specifically, they require agencies to have an effective mechanism for conducting additional site visits at reasonable intervals to those institutions that operate more than three additional locations. They also require agencies to have an effective mechanism, which may include site visits, for ensuring that institutions that experience rapid growth in the number of additional locations maintain educational quality.

The negotiating committee believed the proposed approach to the site visit requirement provided relief from the burden some agencies, particularly those that accredit State institutions, have experienced as a result of the requirement in the current regulations. Yet they also believed this approach retained a reasonable degree of protection by requiring site visits if circumstances warrant them.

Substantive Change

Except for the provisions related to site visits to additional locations that were discussed in the previous section, § 602.22 of the proposed regulations basically repeats § 602.25 of the current regulations. However, there are a few changes. For example, under the proposed regulations, agencies' substantive change policies would no longer need to address changes from credit to clock hours or a substantial increase in the length of a program. The former requirement was deleted because few, if any, institutions ever changed from credit to clock hours, while the latter was deleted because it duplicated another requirement.

Unannounced Inspections

The Higher Education Amendments of 1998 changed the requirement contained in § 602.24(b)(3) of the current regulations that agencies must conduct unannounced inspections of institutions that provide vocational education, making it optional rather than mandatory. Accordingly, § 602.23(f) of the proposed regulations permits an agency to establish any additional operating procedures it deems appropriate, including unannounced inspections, but it does not require the agency to conduct unannounced inspections.

Change in Ownership

While there has been no significant change to this provision in the proposed accreditation regulations, the Secretary wishes to clarify that it is the agency's definition of what constitutes a change in control, not the Department's definition, that would govern this section of the regulations. In conjunction with the statutory requirement for standards that address Title IV compliance, however, agencies whose accreditation enables the institutions they accredit to establish eligibility to participate in Title IV programs would need to take due note in their definition of ''change in control'' of those instances that are covered by the Department's definition of the term.

Teach-Out Agreements

The proposed regulations address two particular concerns with the current regulations. First, the regulations appear to require agencies to intercede in situations in which the agencies have no control because the institution has already closed. Second, they appear to imply that agencies can only approve teach-out agreements if the teach-out institution is geographically close to the closed institution and offers a program that is compatible in program structure and scheduling to that offered by the closed institution.

The proposed regulations clarify that the role of the accrediting agency is to ensure that the teach-out institution has the necessary experience, resources, and support services to provide an educational program that is of acceptable quality, is reasonably similar in content, structure, and scheduling to that provided by the closed institution, and can provide students access to the program and services without requiring them to move or travel substantial distances.

The proposed regulations also require an agency to work with the Department and the appropriate State agency, to the extent feasible, to ensure that students are given reasonable opportunities to complete their education without additional charge.

Notification of Accrediting Decisions

Section 602.26 of the proposed regulations basically repeats § 602.29 of the current regulations, with one addition. The proposed regulations require an agency to provide the appropriate State licensing or authorizing agency and the appropriate accrediting agencies written notice of any final adverse decision at the same time it notifies the institution or program of the decision and to provide notice to the public within 24 hours of notifying the institution or program of the decision.

The proposed regulations mirror section 496(a)(7) of the statute in requiring agencies to report only final adverse decisions. However, the Secretary wishes to encourage all agencies to share information with the Secretary on adverse decisions that are still appealable within the agency if the information would help preserve the integrity of the Title IV, HEA programs. The Secretary believes that sharing this type of information is consistent with section 487(a)(15) of the HEA, which requires an institution that participates in the Title IV, HEA programs to acknowledge in its Program Participation Agreement the authority of

the Secretary, guarantee agencies, lenders, accrediting agencies, the Secretary of Veterans Affairs, and State licensing and authorizing agencies to share with each other any information pertaining to the institution's eligibility to participate in the Title IV, HEA programs. The Secretary notes that many agencies already share this information and hopes that more will do so, particularly in those instances in which students could be harmed if the information were not shared with the Secretary.

Subpart C—The Recognition Process (§§ 602.30 Through 602.36)

This subpart basically contains the recognition procedures found in subpart C of the current regulations. The significant changes that are proposed for the recognition process are discussed in the following sections.

Application and Review by Department Staff (§§ 602.30 and 602.31)

The proposed regulations basically repeat §§ 602.10 and 602.11 of the current regulations. There are, however, three significant changes proposed for the review of an agency's application by Department staff.

First, the proposed regulations amend the procedures Department staff follows in reviewing an agency's application for initial recognition to allow staff to return the application if the agency fails to meet one or more of the basic eligibility requirements contained in §§ 602.10 through 602.13. Under the proposed procedures, staff would provide the agency with an explanation of the deficiencies resulting in its decision to return the agency's application and would recommend that the agency withdraw its application and reapply if it can demonstrate that it has corrected the deficiencies.

The second change in the proposed regulations concerns the submission of written comments by third parties and codifies the Department's current practice. Specifically, proposed § 602.31(b), (e), and(i) clarify that Department staff will consider, and forward to the Advisory Committee for consideration, only those written third-party comments received by the deadline the Department establishes in the **Federal Register** notice.

The third change concerns the provision in § 602.11(g) of the current regulations that requires Department staff to send its analysis of an agency's application to the agency at least 45 days before the Advisory Committee meeting and allows the agency the right to request that the Advisory Committee defer action on its application if Department staff fails to meet the 45-day deadline. There have been instances in recent years in which staff has been unable to meet the deadline, not through any fault of its own but rather because it was unable to complete its work due to an agency's failure to submit a required report by the deadline the Secretary established. Under § 602.31 of the proposed regulations, the agency would forfeit its right to request a deferral in those situations in which the Department's inability to meet the deadline was due to the agency's failure to respond in a timely manner to departmental requests.

Review by the National Advisory Committee on Institutional Quality and Integrity (§§ 602.32 and 602.33)

Included under this heading is § 602.12 of the current regulations and that portion of § 602.13(b) that deals with an appeal of the Advisory Committee's recommendation. The proposed regulations include three significant changes from the current regulations, two of which address what has been called the ''12-month rule.'' The third clarifies the role of the senior Department official in forwarding the Advisory Committee's recommendations to the Secretary.

The ''12-Month Rule''

The 1998 amendments require the Secretary to limit, suspend, or terminate an agency's recognition, after notice and opportunity for a hearing, if the Secretary determines that an accrediting agency has failed to perform effectively with respect to the criteria for recognition or is otherwise not in compliance with the criteria. Alternatively, the Secretary may require the agency to bring itself into compliance within a timeframe the Secretary specifies, but the timeframe may not exceed 12 months. The 1998 amendments also specify that the Secretary must, after notice and opportunity for a hearing, limit, suspend, or terminate the agency's recognition if the agency fails to bring itself into compliance within the timeframe specified by the Secretary unless the Secretary extends the timeframe for good cause.

The proposed regulations make two changes to the Advisory Committee's procedures to reflect this ''12-month rule.'' First, if the Advisory Committee, as part of its review of a recognized agency for continued recognition, determines that the agency fails to meet the criteria for recognition or is ineffective in its performance with respect to the criteria, § 602.32(b) of the proposed regulations calls for the Advisory Committee to take one of two actions. The Advisory Committee would have to recommend either (1) denial of recognition or (2) deferral of a decision on recognition for a period not to exceed 12 months, during which period the agency would have to come into compliance or face a limitation, suspension, or termination action at the conclusion of the specified timeframe.

Second, the proposed regulations delete § 602.12(c)(2) of the current regulations, which allows the Advisory Committee to recommend recognition even if the agency fails to comply with all of the criteria for recognition.

The Role of the Senior Department Official

It has been Department practice, except in cases of contested appeals of Advisory Committee recommendations, for the senior Department official to transmit the Advisory Committee's recommendations to the Secretary along with his or her own recommendations and comments on the Advisory Committee's recommendations. The language found in §§ 602.32(d) and 602.34(b) of the proposed regulations reflects this practice.

Review and Decision by the Secretary (§§ 602.34 Through 602.36)

Included under this heading are § 602.15 of the current regulations and that portion of § 602.13 that deals with the Secretary's decision. The only significant change proposed concerns the ''12-month rule.'' Under the proposed regulations, if the Secretary, as part of the review of a recognized agency for continued recognition, determines that the agency fails to meet the criteria for recognition or is otherwise not effective in its performance with respect to those criteria, the Secretary may either deny recognition or defer a decision on recognition for a period not to exceed 12 months. During the 12-month period, the agency would have to come into compliance or face a limitation, suspension, or termination action at the conclusion of the specified period. The proposed regulations allow the Secretary to extend the timeframe for the agency to come into compliance upon application by the agency for good cause shown.

The negotiating committee carefully considered whether the regulations should define ''good cause.'' In the end, the committee concluded that it was best not to define this term. Instead, the burden rests with an agency that has failed to meet the statutory deadline to demonstrate that good cause exists for

the Secretary to grant a request for an extension of time.

Section 602.35 of the proposed regulations, which describes the information that is included in the Secretary's recognition decision, differs from § 602.13(e) of the current regulations, which defines the scope of recognition the Secretary grants to an agency, and should be read in conjunction with the proposed addition regarding distance education in § 602.3 of a definition of ''scope of recognition.''

Subpart D—Limitation, Suspension, or Termination of Recognition (§§ 602.40 Through 602.45)

Included in this subpart is § 602.14 of the current regulations. The significant changes deal with the ''12-month rule'' and the hearing procedures. They are discussed in the next section.

Limitation, Suspension, and Termination Procedures (§§ 602.40 Through 602.43)

As previously mentioned, the 1998 amendments require the Secretary to limit, suspend, or terminate an agency's recognition, if after notice and opportunity for a hearing the Secretary determines that the agency has failed to effectively apply the criteria for recognition or is otherwise not in compliance with the criteria. Alternatively, the Secretary may require the agency to bring itself into compliance within a timeframe the Secretary specifies, but the timeframe may not exceed 12 months unless the Secretary extends the timeframe for good cause shown.

As previously discussed, §§ 602.32 through 602.36 of the proposed regulations implement the ''12-month rule'' in those instances in which an agency's noncompliance with the criteria for recognition comes to the Department's attention as a result of a regularly scheduled review of the agency for continued recognition. Sections 602.40 through 602.43 of the proposed regulations implement the ''12-month rule'' if the Department learns of an agency's noncompliance at any point during a previously granted period of recognition. In these latter instances, the proposed regulations permit, but do not require, the Secretary to provide a noncompliant agency up to 12 months to achieve compliance. They also permit the Secretary to extend the timeframe for achieving compliance on the basis of good cause shown.

The proposed regulations carry over the hearing procedures for a limitation, suspension, or termination of recognition action contained in § 602.14 of the current regulations with only one change. While the current procedures allow for the hearing to be held before either the full Advisory Committee or a subcommittee, the proposed regulations allow a hearing only before a subcommittee of the Advisory Committee. The principal reason for the proposed change is one of timing; i.e., to conform to the ''12-month rule.'' As the full Advisory Committee meets only twice a year, waiting to hold the hearing at one of those meetings could mean a delay of almost six months in bringing closure to the issue. Accordingly, the proposed regulations would limit the hearing to a subcommittee, which can be convened much more quickly.

Appeal Rights and Procedures (§§ 602.44 and 602.45)

There are no significant changes to these sections of the proposed regulations, which basically repeat § 602.14(f) of the current regulations.

Subpart E—Department Responsibilities (§ 602.50)

There are no significant changes to this section of the proposed regulations, which basically repeats § 602.5 of the current regulations.

Other Changes

To comply with some terminology changes to the HEA resulting from the Higher Education Amendments of 1998, the proposed regulations contain some other changes. First, they would replace the State Postsecondary Review entities with State licensing or authorizing agencies. Second, they would consistently use the term ''standards'' rather than ''criteria'' or ''standards and criteria'' to refer to requirements institutions or programs must meet in order to become accredited or preaccredited by an agency.

Finally, the proposed regulations have been written in ''plain language.'' Further discussion of this change is in the Executive Order 12866 section under the heading ''Clarity of the Regulations.''

General Comments on the Recognition Process

The Secretary acknowledges that the application for recognition constitutes a significant burden on agencies that seek recognition. For this reason, the Secretary is considering ways to reduce the burden. One approach under consideration is to allow a recognized agency applying for continued recognition to provide a simple statement of assurance, along with some supporting documentation, that it continues to meet each of the criteria for recognition. The supporting documentation might include a complete set of the agency's standards, policies, procedures, and by-laws.

Another approach under consideration is to have Department staff conduct a site visit to agency headquarters for the purpose of determining, through reviews of agency files and interviews with agency staff, any significant changes that might affect the agency's ability to meet certain requirements for recognition. The Secretary estimates that at least two-thirds of the requirements in the proposed regulations might be amenable to this type of approach, and the resultant savings in time, effort, and cost to prepare an application for recognition would be significant.

Still another approach under consideration is to identify other sections of the regulations, similar to § 602.12 of the proposed regulations, that recognized agencies would not need to address in their application for continued recognition.

The Secretary invites comments on these approaches and suggestions for alternative methods for reducing the burden of the application process on agencies without adversely affecting the Secretary's ability to conduct a thorough evaluation of the agency.

Executive Order 12866

1. Potential Costs and Benefits

Under Executive Order 12866, we have assessed the potential costs and benefits of this regulatory action.

The potential costs associated with these proposed regulations are those resulting from statutory requirements and those we have determined to be necessary for a determination that an accrediting agency that seeks recognition is in fact a reliable authority regarding the quality of education or training provided by the institutions or programs it accredits. Elsewhere in this **SUPPLEMENTARY INFORMATION** section we identify and explain burdens specifically associated with information collection requirements. See the heading ''Paperwork Reduction Act of 1995.''

In assessing the potential costs and benefits—both quantitative and qualitative—of this regulatory action, we have determined that the benefits justify the costs. We have also determined that this regulatory action would not unduly interfere with State, local, and tribal governments in the exercise of their governmental functions.

We note that, as these proposed regulations were subject to negotiated rulemaking, the costs and benefits of the

various requirements were discussed thoroughly by negotiators. The resultant consensus reached on a particular requirement generally reflected agreement on the best possible approach to that requirement in terms of cost and benefit. Elsewhere in this preamble we discuss the potential costs and benefits of the various requirements in the proposed regulations under the heading ''Regulatory Flexibility Act Certification.''

2. Clarity of the Regulations

Executive Order 12866 and the President's Memorandum of June 1, 1998 on ''Plain Language in Government Writing'' require each agency to write regulations that are easy to understand.

The Secretary invites comments on how to make these proposed regulations easier to understand, including answers to questions such as the following:

- Are the requirements in the proposed regulations clearly stated?
- Do the proposed regulations contain technical terms or other wording that interferes with their clarity?
- Does the format of the proposed regulations (grouping and order of sections, use of headings, paragraphing, tables, etc.) aid or reduce clarity?
- Would the proposed regulations be easier to understand if we divided them into more (but shorter) sections? (A section is preceded by the symbol ''§ '' and a numbered heading; for example, § 602.16 Accreditation and preaccreditation standards.)
- Could the description of the proposed regulations in the **SUPPLEMENTARY INFORMATION** section of this preamble be more helpful in making the proposed regulations easier to understand? If so, how?
- What else could we do to make the proposed regulations easier to understand?

Send any comments that concern how the Department could make these proposed regulations easier to understand to the person listed in the **ADDRESSES** section of the preamble.

Regulatory Flexibility Act Certification

The Secretary certifies that these proposed regulations would not have a significant economic impact on a substantial number of small entities. These proposed regulations will affect accrediting agencies that apply for Secretarial recognition and the institutions they accredit or that house the programs they accredit. The proposed regulations reduce the burden on both agencies and institutions by eliminating the requirement that agencies conduct unannounced inspections of institutions that offer vocational education and by greatly reducing the number of site visits agencies must make if institutions establish additional locations. The proposed regulations impose the minimum requirements needed to ensure the proper implementation of the Secretary's statutory mandate to recognize only those accrediting agencies that are reliable authorities regarding the quality of education or training provided by the institutions or programs they accredit.

Paperwork Reduction Act of 1995

Sections 602.16, 602.24, 602.26, 602.27, and 602.30 contain information collection requirements. In addition, §§ 602.15(b) and 602.23(a) contain specific record retention requirements, and §§ 602.23(e) and 602.28(e) contain third party disclosure requirements. Under the Paperwork Reduction Act of 1995 (44 U.S.C. 3507(d)), the Department of Education has submitted a copy of these sections to the Office of Management and Budget (OMB) for its review.

These proposed regulations contain significant information collection requirements for accrediting agencies applying for recognition by the Secretary, as well as additional requirements for recognized agencies during their recognition period. The Department needs and uses the information collected to determine whether an agency seeking recognition by the Secretary meets the requirements for recognition and whether, if the agency is recognized, it continues to operate in compliance with the requirements for recognition throughout its recognition period.

Collection of Information: The Secretary's Recognition of Accrediting Agencies

Each accrediting agency that seeks initial or continued recognition is required by § 602.30 to submit an application for recognition demonstrating how it meets each of the criteria for recognition. We estimate that it takes an agency approximately 80 hours to complete its application, including time for reviewing instructions, searching existing data bases, gathering and maintaining the data needed, and completing and reviewing the collection of information. Thus, the total burden on the 61 agencies recognized under the current regulations to submit an application for continued recognition would be 4,880 hours. As agencies must submit an application for recognition only once every five years, this represents a total annual burden of 976 hours.

We also estimate that the burden on an agency to provide to the Department on an annual basis the various documents and reports required under §§ 602.26 and 602.27 would be one hour. Thus, the total annual reporting requirement for the 61 recognized agencies would be 61 hours.

If you want to comment on the information collection requirements, please send your comments to the Office of Information and Regulatory Affairs, OMB, room 10235, New Executive Office Building, Washington, DC 20503; Attention: Desk Officer for U.S. Department of Education. You may also send a copy of these comments to the Department representative named in the **ADDRESSES** section of this preamble.

We consider your comments on this proposed collection of information in—

- Deciding whether the proposed collection is necessary for the proper performance of our functions, including whether the information will have practical use;
- Evaluating the accuracy of our estimate of the burden of the proposed collection, including the validity of our methodology and assumptions;
- Enhancing the quality, usefulness, and clarity of the information we collect; and
- Minimizing the burden on those who must respond. This includes exploring the use of appropriate automated, electronic, mechanical, or other technological collection techniques or other forms of information technology; e.g., permitting electronic submission of responses.

OMB is required to make a decision concerning the collection of information contained in these proposed regulations between 30 and 60 days after publication of this document in the **Federal Register**. Therefore, to ensure that OMB gives your comments full consideration, it is important that OMB receives the comments within 30 days of publication. This does not affect the deadline for your comments to us on the proposed regulations.

Intergovernmental Review

This program is not subject to Executive Order 12372 and the regulations in 34 CFR part 79.

Assessment of Educational Impact

The Secretary particularly requests comments on whether these proposed regulations would require transmission of information that any other agency or authority of the United States gathers or makes available.

Electronic Access to This Document

You may view this document, as well as all other Department of Education documents published in the **Federal Register**, in text or Adobe Portable Document Format (PDF) on the Internet at either of the following sites:

http://ocfo.ed.gov/fedreg.htm
http://www.ed.gov/news.html

To use the PDF, you must have the Adobe Acrobat Reader Program with Search, which is available free at either of the previous sites. If you have questions about using the PDF, call the U.S. Government Printing Office (GPO), toll free, at 1–888–293–6498; or in the Washington, DC, area at (202) 512–1530.

Note: The official version of this document is the document published in the **Federal Register**. Free Internet access to the official edition of the **Federal Register** and the Code of Federal Regulations is available on GPO Access at: http://www.access.gpo.gov/nara/index.html

(Catalog of Federal Domestic Assistance Number does not apply)

List of Subjects in 34 CFR Part 602

Colleges and universities, Education, Reporting and recordkeeping requirements.

Dated: June 16, 1999.

Richard W. Riley,

Secretary of Education.

For the reasons discussed in the preamble, the Secretary proposes to amend title 34 of the Code of Federal Regulations by revising part 602 to read as follows:

PART 602—THE SECRETARY'S RECOGNITION OF ACCREDITING AGENCIES

Subpart A—General

Sec.
602.1 Why does the Secretary recognize accrediting agencies?
602.2 How do I know which agencies the Secretary recognizes?
602.3 What definitions apply to this part?

Subpart B—The Criteria for Recognition

Basic Eligibility Requirements

602.10 Link to Federal programs.
602.11 Geographic scope of accrediting activities.
602.12 Accrediting experience.
602.13 Acceptance of the agency by others.

Organizational and Administrative Requirements

602.14 Purpose and organization.
602.15 Administrative and fiscal responsibilities.

Required Standards and Their Application

602.16 Accreditation and preaccreditation standards.
602.17 Application of standards in reaching an accrediting decision.
602.18 Ensuring consistency in decision-making.
602.19 Monitoring and reevaluation of accredited institutions and programs.
602.20 Enforcement of standards.
602.21 Review of standards.

Required Operating Policies and Procedures

602.22 Substantive change.
602.23 Operating procedures all agencies must have.
602.24 Additional procedures certain institutional accreditors must have.
602.25 Due process.
602.26 Notification of accrediting decisions.
602.27 Other information an agency must provide the Department.
602.28 Regard for decisions of States and other accrediting agencies.

Subpart C—The Recognition Process

Application and Review by Department Staff

602.30 How does an agency apply for recognition?
602.31 How does Department staff review an agency's application?

Review by the National Advisory Committee on Institutional Quality and Integrity

602.32 What is the role of the Advisory Committee and the senior Department official in the review of an agency's application?
602.33 How may an agency appeal a recommendation of the Advisory Committee?

Review and Decision by the Secretary

602.34 What does the Secretary consider when making a recognition decision?
602.35 What information does the Secretary's recognition decision include?
602.36 May an agency appeal the Secretary's final recognition decision?

Subpart D—Limitation, Suspension, or Termination of Recognition

Limitation, Suspension, and Termination Procedures

602.40 How may the Secretary limit, suspend, or terminate an agency's recognition?
602.41 What are the notice procedures?
602.42 What are the response and hearing procedures?
602.43 How is a decision on limitation, suspension, or termination of recognition reached?

Appeal Rights and Procedures

602.44 How may an agency appeal the subcommittee's recommendation?
602.45 May an agency appeal the Secretary's final decision to limit, suspend, or terminate its recognition?

Subpart E—Department Responsibilities

602.50 What information does the Department share with a recognized agency about its accredited institutions and programs?

Authority: 20 U.S.C. 1099b, unless otherwise noted.

Subpart A—General

§ 602.1 Why does the Secretary recognize accrediting agencies?

(a) The Secretary recognizes accrediting agencies to ensure that these agencies are, for the purposes of the Higher Education Act of 1965, as amended (HEA), or for other Federal purposes, reliable authorities regarding the quality of education or training offered by the institutions or programs they accredit.

(b) The Secretary lists an agency as a nationally recognized accrediting agency if the agency meets the criteria for recognition listed in subpart B of this part.

(Authority: 20 U.S.C. 1099b)

§ 602.2 How do I know which agencies the Secretary recognizes?

(a) Periodically, the Secretary publishes a list of recognized agencies in the **Federal Register**, together with each agency's scope of recognition. You may obtain a copy of the list from the Department at any time. The list is also available on the Department's web site.

(b) If the Secretary denies continued recognition to a previously recognized agency, or if the Secretary limits, suspends, or terminates the agency's recognition before the end of its recognition period, the Secretary publishes a notice of that action in the **Federal Register**. The Secretary also makes the reasons for the action available to the public, on request.

(Authority: 20 U.S.C. 1099b)

§ 602.3 What definitions apply to this part?

The following definitions apply to this part:

Accreditation means the status of public recognition that an accrediting agency grants to an educational institution or program that meets the agency's standards and requirements.

Accrediting agency or *agency* means a legal entity, or that part of a legal entity, that conducts accrediting activities through voluntary, non-Federal peer review and makes decisions concerning the accreditation or preaccreditation status of institutions, programs, or both.

Act means the Higher Education Act of 1965, as amended.

Adverse accrediting action or *adverse action* means the denial, withdrawal, suspension, revocation, or termination of accreditation or preaccreditation, or any comparable accrediting action an agency may take against an institution or program.

Advisory Committee means the National Advisory Committee on Institutional Quality and Integrity.

Branch campus means a location of an institution that meets the definition of branch campus in 34 CFR 600.2.

Distance education means an educational process that is characterized by the separation, in time or place, between instructor and student. The term includes courses offered principally through the use of—

(1) Television, audio, or computer transmission, such as open broadcast, closed circuit, cable, microwave, or satellite transmission;

(2) Audio or computer conferencing;

(3) Video cassettes or disks; or

(4) Correspondence.

Final accrediting action means a final determination by an accrediting agency regarding the accreditation or preaccreditation status of an institution or program. A final accrediting action is not appealable within the agency.

Institution of higher education or *institution* means an educational institution that qualifies, or may qualify, as an eligible institution under 34 CFR part 600.

Institutional accrediting agency means an agency that accredits institutions of higher education.

Nationally recognized accrediting agency, nationally recognized agency, or *recognized agency* means an accrediting agency that the Secretary recognizes under this part.

Preaccreditation means the status of public recognition that an accrediting agency grants to an institution or program for a limited period of time that signifies the agency has determined that the institution or program is progressing towards accreditation and is likely to attain accreditation before the expiration of that limited period of time.

Program means a postsecondary educational program offered by an institution of higher education that leads to an academic or professional degree, certificate, or other recognized educational credential.

Programmatic accrediting agency means an agency that accredits specific educational programs that prepare students for entry into a profession, occupation, or vocation.

Representative of the public means a person who is not—

(1) An employee, member of the governing board, owner, or shareholder of, or consultant to, an institution or program that either is accredited or preaccredited by the agency or has applied for accreditation or preaccreditation;

(2) A member of any trade association or membership organization related to, affiliated with, or associated with the agency; or

(3) A spouse, parent, child, or sibling of an individual identified in paragraph (1) or (2) of this definition.

Scope of recognition or *scope* means the range of accrediting activities for which the Secretary recognizes an agency. The Secretary may place a limitation on the scope of an agency's recognition for Title IV, HEA purposes. The Secretary's designation of scope defines the recognition granted according to—

(1) Geographic area of accrediting activities;

(2) Types of degrees and certificates covered;

(3) Types of institutions and programs covered;

(4) Types of preaccreditation status covered, if any; and

(5) Coverage of accrediting activities related to distance education, if any.

Secretary means the Secretary of the U.S. Department of Education or any official or employee of the Department acting for the Secretary under a delegation of authority.

Senior Department official means the senior official in the U.S. Department of Education who reports directly to the Secretary regarding accrediting agency recognition.

State means a State of the Union, American Samoa, the Commonwealth of Puerto Rico, the District of Columbia, Guam, the United States Virgin Islands, the Commonwealth of the Northern Mariana Islands, the Republic of the Marshall Islands, the Federated States of Micronesia, and the Republic of Palau. The latter three are also known as the Freely Associated States.

Teach-out agreement means a written agreement between institutions that provides for the equitable treatment of students if one of those institutions stops offering an educational program before all students enrolled in that program have completed the program.

(Authority: 20 U.S.C. 1099b)

Subpart B—The Criteria for Recognition

Basic Eligibility Requirements

§ 602.10 Link to Federal programs.

The agency must demonstrate that—

(a) If the agency accredits institutions of higher education, its accreditation is a required element in enabling at least one of those institutions to establish eligibility to participate in HEA programs; or

(b) If the agency accredits institutions of higher education or higher education programs, or both, its accreditation is a required element in enabling at least one of those entities to establish eligibility to participate in non-HEA Federal programs.

(Authority: 20 U.S.C. 1099b)

§ 602.11 Geographic scope of accrediting activities.

The agency must demonstrate that its accrediting activities cover—

(a) A State, if the agency is part of a State government;

(b) A region of the United States that includes at least three States that are reasonably close to one another; or

(c) The United States.

(Authority: 20 U.S.C. 1099b)

§ 602.12 Accrediting experience.

(a) An agency seeking initial recognition must demonstrate that it has—

(1) Granted accreditation or preaccreditation—

(i) To one or more institutions if it is requesting recognition as an institutional accrediting agency and to one or more programs if it is requesting recognition as a programmatic accrediting agency;

(ii) That covers the range of the specific degrees, certificates, institutions, and programs for which it seeks recognition; and

(iii) In the geographic area for which it seeks recognition; and

(2) Conducted accrediting activities, including deciding whether to grant or deny accreditation or preaccreditation, for at least two years prior to seeking recognition.

(b) A recognized agency seeking an expansion of its scope of recognition must demonstrate that it has granted accreditation or preaccreditation covering the range of the specific degrees, certificates, institutions, and programs for which it seeks the expansion of scope.

(Authority: 20 U.S.C. 1099b)

§ 602.13 Acceptance of the agency by others.

The agency must demonstrate that its standards, policies, procedures, and decisions to grant or deny accreditation are widely accepted in the United States by—

(a) Educators and educational institutions; and

(b) Licensing bodies, practitioners, and employers in the professional or vocational fields for which the educational institutions or programs within the agency's jurisdiction prepare their students.

(Authority: 20 U.S.C. 1099b)

Organizational and Administrative Requirements

§ 602.14 Purpose and organization.

(a) The Secretary recognizes only the following four categories of agencies:

The Secretary recognizes * * *	that * * *
(1) An accrediting agency	(i) Has a voluntary membership of institutions of higher education; (ii) Has as a principal purpose the accrediting of institutions of higher education and that accreditation is a required element in enabling those institutions to participate in HEA programs; and (iii) Satisfies the ''separate and independent'' requirements in paragraph (b) of this section.
(2) An accrediting agency	(i) Has a voluntary membership; and (ii) Has as its principal purpose the accrediting of higher education programs, or higher education programs and institutions of higher education, and that accreditation is a required element in enabling those entities to participate in non-HEA Federal programs.
(3) An accrediting agency	For purposes of determining eligibility for Title IV, HEA programs— (i) Either has a voluntary membership of individuals participating in a profession or has as its principal purpose the accrediting of programs within institutions that are accredited by a nationally recognized accrediting agency; and (ii) Either satisfies the ''separate and independent'' requirements in paragraph (b) of this section or obtains a waiver of those requirements under paragraphs (d) and (e) of this section.
(4) A State agency	(i) Has as a principal purpose the accrediting of institutions of higher education, higher education programs, or both; and (ii) The Secretary listed as a nationally recognized accrediting agency on or before October 1, 1991 and has recognized continuously since that date.

(b) For purposes of this section, the term *separate and independent* means that—

(1) The members of the agency's decision-making body—who decide the accreditation or preaccreditation status of institutions or programs, establish the agency's accreditation policies, or both—are not elected or selected by the board or chief executive officer of any related, associated, or affiliated trade association or membership organization;

(2) At least one member of the agency's decision-making body is a representative of the public, and at least one-seventh of that body consists of representatives of the public;

(3) The agency has established and implemented guide lines for each member of the decision-making body to avoid conflicts of interest in making decisions;

(4) The agency's dues are paid separately from any dues paid to any related, associated, or affiliated trade association or membership organization; and

(5) The agency develops and determines its own budget, with no review by or consultation with any other entity or organization.

(c) The Secretary considers that any joint use of personnel, services, equipment, or facilities by an agency and a related, associated, or affiliated trade association or membership organization does not violate the ''separate and independent'' requirements in paragraph (b) of this section if—

(1) The agency pays the fair market value for its proportionate share of the joint use; and

(2) The joint use does not compromise the independence and confidentiality of the accreditation process.

(d) For purposes of paragraph (a)(3) of this section, the Secretary may waive the ''separate and independent'' requirements in paragraph (b) of this section if the agency demonstrates that—

(1) The Secretary listed the agency as a nationally recognized agency on or before October 1, 1991 and has recognized it continuously since that date;

(2) The related, associated, or affiliated trade association or membership organization plays no role in making or ratifying either the accrediting or policy decisions of the agency;

(3) The agency has sufficient budgetary and administrative autonomy to carry out its accrediting functions independently; and

(4) The agency provides to the related, associated, or affiliated trade association or membership organization only information it makes available to the public.

(e) An agency seeking a waiver of the ''separate and independent'' requirements under paragraph (d) of this section must apply for the waiver each time the agency seeks recognition or continued recognition.

(Authority: 20 U.S.C. 1099b)

§ 602.15 Administrative and fiscal responsibilities.

The agency must have the administrative and fiscal capability to carry out its accreditation activities in light of its requested scope of recognition. The agency meets this requirement if the agency demonstrates that—

(a) The agency has—

(1) Adequate administrative staff and financial resources to carry out its accrediting responsibilities;

(2) Competent and knowledgeable individuals, qualified by education and experience in their own right and trained by the agency on its standards, policies, and procedures, to conduct its on-site evaluations, establish its policies, and make its accrediting and preaccrediting decisions;

(3) Academic and administrative personnel on its evaluation, policy, and decision-making bodies, if the agency accredits institutions;

(4) Educators and practitioners on its evaluation, policy, and decision-making bodies, if the agency accredits programs;

(5) Representatives of the public on all decision-making bodies; and

(6) Clear and effective controls against conflicts of interest, or the appearance of conflicts of interest, by the agency's—

(i) Board members;

(ii) Commissioners;

(iii) Evaluation team members;

(iv) Consultants;

(v) Administrative staff; and

(vi) Other agency representatives; and

(b) The agency maintains complete and accurate records of—

(1) Its last two full accreditation or preaccreditation reviews of each institution or program, including on-site evaluation team reports, the institution's or program's responses to on-site reports, periodic review reports, any reports of special reviews conducted by the agency between regular reviews, and a copy of the institution's or program's most recent self-study; and

(2) All decisions regarding the accreditation and preaccreditation of any institution or program, including all correspondence that is significantly related to those decisions.

(Authority: 20 U.S.C. 1099b)

Required Standards and Their Application

§ 602.16 Accreditation and preaccreditation standards.

(a) The agency must demonstrate that it has standards for accreditation, and preaccreditation, if offered, that are sufficiently rigorous to ensure that the agency is a reliable authority regarding the quality of the education or training provided by the institutions or programs it accredits. The agency meets this requirement if—

(1) The agency's accreditation standards effectively address the quality of the institution or program in the following areas:

(i) Success with respect to student achievement in relation to the institution's mission, including, as appropriate, consideration of course completion, State licensing examination, and job placement rates.

(ii) Curricula.

(iii) Faculty.

(iv) Facilities, equipment, and supplies.

(v) Fiscal and administrative capacity as appropriate to the specified scale of operations.

(vi) Student support services.

(vii) Recruiting and admissions practices, academic calendars, catalogs, publications, grading, and advertising.

(viii) Measures of program length and the objectives of the degrees or credentials offered.

(ix) Record of student complaints received by, or available to, the agency.

(x) Record of compliance with the institution's program responsibilities under Title IV of the Act, based on the most recent student loan default rate data provided by the Secretary, the results of financial or compliance audits, program reviews, and any other information that the Secretary may provide to the agency; and

(2) The agency's preaccreditation standards, if offered, are appropriately related to the agency's accreditation standards and do not permit the institution or program to hold preaccreditation status for more than five years.

(b) If the agency only accredits programs and does not serve as an institutional accrediting agency for any of those programs, its accreditation standards must address the areas in paragraph (a)(1) of this section in terms of the type and level of the program rather than in terms of the institution.

(c) If none of the institutions an agency accredits participates in any Title IV, HEA program, or if the agency only accredits programs within institutions that are accredited by a nationally recognized institutional accrediting agency, the agency is not required to have the accreditation standards described in paragraphs (a)(1)(viii) and (a)(1)(x) of this section.

(d) An agency that has established and applies the standards in paragraph (a) of this section may establish any additional accreditation standards it deems appropriate.

(Authority: 20 U.S.C. 1099b)

§ 602.17 Application of standards in reaching an accrediting decision.

The agency must have effective mechanisms for evaluating an institution's or program's compliance with the agency's standards before reaching a decision to accredit or preaccredit the institution or program. The agency meets this requirement if the agency demonstrates that it—

(a) Evaluates whether an institution or program—

(1) Maintains clearly specified educational objectives that are consistent with its mission and appropriate in light of the degrees or certificates awarded;

(2) Is successful in achieving its stated objectives; and

(3) Maintains degree and certificate requirements that at least conform to commonly accepted standards;

(b) Requires the institution or program to prepare, following guidance provided by the agency, an in-depth self-study that includes the assessment of educational quality and the institution's or program's continuing efforts to improve educational quality;

(c) Conducts at least one on-site review of the institution or program during which it obtains sufficient information to determine if the institution or program complies with the agency's standards;

(d) Allows the institution or program the opportunity to respond in writing to the report of the on-site review;

(e) Conducts its own analysis of the self-study and supporting documentation furnished by the institution or program, the report of the on-site review, the institution's or program's response to the report, and any other appropriate information from other sources to determine whether the institution or program complies with the agency's standards; and

(f) Provides the institution or program with a detailed written report that assesses—

(1) The institution's or program's compliance with the agency's standards, including areas needing improvement; and

(2) The institution's or program's performance with respect to student achievement.

(Authority: 20 U.S.C. 1099b)

§ 602.18 Ensuring consistency in decision-making.

The agency must consistently apply and enforce its standards to ensure that the education or training offered by an institution or program, including any offered through distance education, is of sufficient quality to achieve its stated objective for the duration of any accreditation or preaccreditation period granted by the agency. The agency meets this requirement if the agency—

(a) Has effective controls against the inconsistent application of the agency's standards;

(b) Bases decisions regarding accreditation and preaccreditation on the agency's published standards; and

(c) Has a reasonable basis for determining that the information the agency relies on for making accrediting decisions is accurate.

(Authority: 20 U.S.C. 1099b)

§ 602.19 Monitoring and reevaluation of accredited institutions and programs.

(a) The agency must reevaluate, at regularly established intervals, the institutions or programs it has accredited or preaccredited.

(b) The agency must monitor institutions or programs throughout their accreditation or preaccreditation period to ensure that they remain in compliance with the agency's standards. This includes conducting special evaluations or site visits, as necessary.

(Authority: 20 U.S.C. 1099b)

§ 602.20 Enforcement of standards.

(a) If the agency's review of an institution or program under any standard indicates that the institution or program is not in compliance with that standard, the agency must—

(1) Immediately initiate adverse action against the institution or program; or

(2) Require the institution or program to take appropriate action to bring itself into compliance with the agency's standards within a time period that must not exceed—

(i) Twelve months, if the program, or the longest program offered by the institution, is less than one year in length;

(ii) Eighteen months, if the program, or the longest program offered by the institution, is at least one year, but less than two years, in length; or

(iii) Two years, if the program, or the longest program offered by the institution, is at least two years in length.

(b) If the institution or program does not bring itself into compliance within the specified period, the agency must take immediate adverse action unless the agency, for good cause, extends the period for achieving compliance.

(Authority: 20 U.S.C. 1099b)

§ 602.21 Review of standards.

(a) The agency must maintain a systematic program of review that demonstrates that its standards are adequate to evaluate the quality of the education or training provided by the institutions and programs it accredits and relevant to the needs of students.

(b) The agency determines the specific procedures it follows in evaluating its standards, but the agency must ensure that its program of review—

(1) Is comprehensive;

(2) Occurs at regular, yet reasonable, intervals or on an ongoing basis;

(3) Examines each of the agency's standards and the standards as a whole; and

(4) Involves all of the agency's relevant constituencies in the review and affords them a meaningful opportunity to provide input into the review.

(c) If the agency determines, at any point during its systematic program of review, that it needs to make changes to its standards, the agency must initiate action within 12 months to make the changes and must complete that action within a reasonable period of time. Before finalizing any changes to its standards, the agency must—

(1) Provide notice to all of the agency's relevant constituencies of the changes the agency proposes to make;

(2) Give the constituencies and other interested parties adequate opportunity to comment on the proposed changes; and

(3) Take into account any comments on the proposed changes submitted timely by the relevant constituencies and by other interested parties.

(Authority: 20 U.S.C. 1099b)

Required Operating Policies and Procedures

§ 602.22 Substantive change.

(a) If the agency accredits institutions, it must maintain adequate substantive change policies that ensure that any substantive change to the educational mission, program, or programs of an institution after the agency has accredited or preaccredited the institution does not adversely affect the capacity of the institution to continue to meet the agency's standards. The agency meets this requirement if—

(1) The agency requires the institution to obtain the agency's approval of the substantive change before the agency includes the change in the scope of accreditation or preaccreditation it previously granted to the institution; and

(2) The agency's definition of substantive change includes at least the following types of change:

(i) Any change in the established mission or objectives of the institution.

(ii) Any change in the legal status, form of control, or ownership of the institution.

(iii) The addition of courses or programs that represent a significant departure, in either content or method of delivery, from those that were offered when the agency last evaluated the institution.

(iv) The addition of courses or programs at a degree or credential level above that which is included in the institution's current accreditation or preaccreditation.

(v) A change from clock hours to credit hours.

(vi) A substantial increase in the number of clock or credit hours awarded for successful completion of a program.

(vii) The establishment of an additional location geographically apart from the main campus at which the institution offers at least 50 percent of an educational program.

(b) The agency may determine the procedures it uses to grant prior approval of the substantive change. Except as provided in paragraph (c) of this section, these may, but need not, require a visit by the agency.

(c) If the agency's accreditation of an institution enables the institution to seek eligibility to participate in Title IV, HEA programs, the agency's procedures for the approval of an additional location described in paragraph (a)(2)(vii) of this section must determine if the institution has the fiscal and administrative capacity to operate the additional location. In addition, the agency's procedures must include—

(1) A visit, within six months, to each additional location the institution establishes, if the institution—

(i) Has a total of three or fewer additional locations;

(ii) Has not demonstrated, to the agency's satisfaction, that it has a proven record of effective educational oversight of additional locations; or

(iii) Has been placed on warning, probation, or show cause by the agency or is subject to some limitation by the agency on its accreditation or preaccreditation status;

(2) An effective mechanism for conducting, at reasonable intervals, visits to additional locations of institutions that operate more than three additional locations; and

(3) An effective mechanism, which may, at the agency's discretion, include visits to additional locations, for ensuring that accredited and preaccredited institutions that experience rapid growth in the number of additional locations maintain educational quality.

(d) The purpose of the visits described in paragraph (c) of this section is to verify that the additional location has the personnel, facilities, and resources it claimed to have in its application to the agency for approval of the additional location.

(Authority: 20 U.S.C. 1099b)

§ 602.23 Operating procedures all agencies must have.

(a) The agency must maintain and make available to the public, upon request, written materials describing—

(1) Each type of accreditation and preaccreditation it grants;

(2) The procedures that institutions or programs must follow in applying for accreditation or preaccreditation;

(3) The standards and procedures it uses to determine whether to grant, reaffirm, reinstate, restrict, deny, revoke, terminate, or take any other action related to each type of accreditation and preaccreditation that the agency grants;

(4) The institutions and programs that the agency currently accredits or preaccredits and, for each institution and program, the year the agency will next review or reconsider it for accreditation or preaccreditation; and

(5) The names, academic and professional qualifications, and relevant employment and organizational affiliations of—

(i) The members of the agency's policy and decision-making bodies; and

(ii) The agency's principal administrative staff.

(b) In providing public notice that an institution or program subject to its jurisdiction is being considered for

accreditation or preaccreditation, the agency must provide an opportunity for third-party comment concerning the institution's or program's qualifications for accreditation or preaccreditation. At the agency's discretion, third-party comment may be received either in writing or at a public hearing, or both.

(c) The accrediting agency must—

(1) Review in a timely, fair, and equitable manner any complaint it receives against an accredited institution or program that is related to the agency's standards or procedures;

(2) Take follow-up action, as necessary, including enforcement action, if necessary, based on the results of its review; and

(3) Review in a timely, fair, and equitable manner, and apply unbiased judgment to, any complaints against itself and take follow-up action, as appropriate, based on the results of its review.

(d) If an institution or program elects to make a public disclosure of its accreditation or preaccreditation status, the agency must ensure that the institution or program discloses that status accurately, including the specific academic or instructional programs covered by that status and the name, address, and telephone number of the agency.

(e) The accrediting agency must provide for the public correction of incorrect or misleading information an accredited or preaccredited institution or program releases about—

(1) The accreditation or preaccreditation status of the institution or program;

(2) The contents of reports of on-site reviews; and

(3) The agency's accrediting or preaccrediting actions with respect to the institution or program.

(f) The agency may establish any additional operating procedures it deems appropriate. At the agency's discretion, these may include unannounced inspections.

(Authority: 20 U.S.C. 1099b)

§ 602.24 Additional procedures certain institutional accreditors must have.

If the agency is an institutional accrediting agency and its accreditation or preaccreditation enables those institutions to obtain eligibility to participate in Title IV, HEA programs, the agency must demonstrate that it has established and uses all of the following procedures:

(a) Branch campus. (1) The agency must require the institution to notify the agency if it plans to establish a branch campus and to submit a business plan for the branch campus that describes—

(i) The educational program to be offered at the branch campus;

(ii) The projected revenues and expenditures and cash flow at the branch campus; and

(iii) The operation, management, and physical resources at the branch campus.

(2) The agency may extend accreditation to the branch campus only after it evaluates the business plan and takes whatever other actions it deems necessary to determine that the branch campus has sufficient educational, financial, operational, management, and physical resources to meet the agency's standards.

(3) The agency must undertake a site visit to the branch campus as soon as practicable, but no later than six months after the establishment of that campus.

(b) Change in ownership. The agency must undertake a site visit to an institution that has undergone a change of ownership that resulted in a change of control as soon as practicable, but no later than six months after the change of ownership.

(c) Teach-out agreements. (1) The agency must require an institution it accredits or preaccredits that enters into a teach-out agreement with another institution to submit that teach-out agreement to the agency for approval.

(2) The agency may approve the teach-out agreement only if the agreement is between institutions that are accredited or preaccredited by a nationally recognized accrediting agency, is consistent with applicable standards and regulations, and provides for the equitable treatment of students by ensuring that—

(i) The teach-out institution has the necessary experience, resources, and support services to provide an educational program that is of acceptable quality and reasonably similar in content, structure, and scheduling to that provided by the closed institution; and

(ii) The teach-out institution demonstrates that it can provide students access to the program and services without requiring them to move or travel substantial distances.

(3) If an institution the agency accredits or preaccredits closes, the agency must work with the Department and the appropriate State agency, to the extent feasible, to ensure that students are given reasonable opportunities to complete their education without additional charge.

(Authority: 20 U.S.C. 1099b)

§ 602.25 Due process.

The agency must demonstrate that the procedures it uses throughout the accrediting process satisfy due process. The agency meets this requirement if the agency does the following:

(a) The agency uses procedures that afford an institution or program a reasonable period of time to comply with the agency's requests for information and documents.

(b) The agency notifies the institution or program in writing of any adverse accrediting action or an action to place the institution or program on probation or show cause. The notice describes the basis for the action.

(c) The agency permits the institution or program the opportunity to appeal an adverse action and the right to be represented by counsel during that appeal. If the agency allows institutions or programs the right to appeal other types of actions, the agency has the discretion to limit the appeal to a written appeal.

(d) The agency notifies the institution or program in writing of the result of its appeal and the basis for that result.

(Authority: 20 U.S.C. 1099b)

§ 602.26 Notification of accrediting decisions.

The agency must demonstrate that it has established and follows written procedures requiring it to provide written notice of its accrediting decisions to the Secretary, the appropriate State licensing or authorizing agency, the appropriate accrediting agencies, and the public. The agency meets this requirement if the agency, following its written procedures—

(a) Provides written notice of the following types of decisions to the Secretary, the appropriate State licensing or authorizing agency, the appropriate accrediting agencies, and the public no later than 30 days after it makes the decision:

(1) A decision to award initial accreditation or preaccreditation to an institution or program.

(2) A decision to renew an institution's or program's accreditation or preaccreditation;

(b) Provides written notice of the following types of decisions to the Secretary, the appropriate State licensing or authorizing agency, and the appropriate accrediting agencies at the same time it notifies the institution or program of the decision, but no later than 30 days after it reaches the decision:

(1) A final decision to place an institution or program on probation or an equivalent status.

(2) A final decision to deny, withdraw, suspend, revoke, or terminate

the accreditation or preaccreditation of an institution or program;

(c) Provides written notice to the public of the decisions listed in paragraphs (b)(1) and (b)(2) of this section within 24 hours of its notice to the institution or program;

(d) For any decision listed in paragraph (b)(2) of this section, makes available to the Secretary, the appropriate State licensing or authorizing agency, and the public upon request, no later than 60 days after the decision, a brief statement summarizing the reasons for the agency's decision and the comments, if any, that the affected institution or program may wish to make with regard to that decision; and

(e) Notifies the Secretary, the appropriate State licensing or authorizing agency, the appropriate accrediting agencies, and, upon request, the public if an accredited or preaccredited institution or program—

(1) Decides to withdraw voluntarily from accreditation or preaccreditation, within 30 days of receiving notification from the institution or program that it is withdrawing voluntarily from accreditation or preaccreditation; or

(2) Lets its accreditation or preaccreditation lapse, within 30 days of the date on which accreditation or preaccreditation lapses.

(Authority: 20 U.S.C. 1099b)

§ 602.27 Other information an agency must provide the Department.

The agency must submit to the Department—

(a) A copy of any annual report it prepares;

(b) A copy, updated annually, of its directory of accredited and preaccredited institutions and programs;

(c) A summary of the agency's major accrediting activities during the previous year (an annual data summary), if requested by the Secretary to carry out the Secretary's responsibilities related to this part;

(d) Any proposed change in the agency's policies, procedures, or accreditation or preaccreditation standards that might alter its—

(1) Scope of recognition; or

(2) Compliance with the criteria for recognition;

(e) The name of any institution or program it accredits that the agency has reason to believe is failing to meet its Title IV, HEA program responsibilities or is engaged in fraud or abuse, along with the agency's reasons for concern about the institution or program; and

(f) If the Secretary requests, information that may bear upon an accredited or preaccredited institution's compliance with its Title IV, HEA program responsibilities, including the eligibility of the institution or program to participate in Title IV, HEA programs. The Secretary may ask for this information to assist the Department in resolving problems with the institution's participation in the Title IV, HEA programs.

(Authority: 20 U.S.C. 1099b)

§ 602.28 Regard for decisions of States and other accrediting agencies.

(a) If the agency is an institutional accrediting agency, it may not accredit or preaccredit institutions that lack legal authorization under applicable State law to provide a program of education beyond the secondary level.

(b) Except as provided in paragraph (c) of this section, the agency may not grant initial or renewed accreditation or preaccreditation to an institution, or a program offered by an institution, if the agency knows, or has reasonable cause to know, that the institution is the subject of—

(1) A pending or final action brought by a State agency to suspend, revoke, withdraw, or terminate the institution's legal authority to provide postsecondary education in the State;

(2) A decision by a recognized agency to deny accreditation or preaccreditation;

(3) A pending or final action brought by a recognized accrediting agency to suspend, revoke, withdraw, or terminate the institution's accreditation or preaccreditation; or

(4) Probation or an equivalent status imposed by a recognized agency.

(c) The agency may grant accreditation or preaccreditation to an institution or program described in paragraph (b) of this section only if it provides to the Secretary, within 30 days of its action, a thorough and reasonable explanation, consistent with its standards, why the action of the other body does not preclude the agency's grant of accreditation or preaccreditation.

(d) If the agency learns that an institution it accredits or preaccredits, or an institution that offers a program it accredits or preaccredits, is the subject of an adverse action by another recognized accrediting agency or has been placed on probation or an equivalent status by another recognized agency, the agency must promptly review its accreditation or preaccreditation of the institution or program to determine if it should also take adverse action or place the institution or program on probation or show cause.

(e) The agency must, upon request, share with other appropriate recognized accrediting agencies and recognized State approval agencies information about the accreditation or preaccreditation status of an institution or program and any adverse actions it has taken against an accredited or preaccredited institution or program.

(Authority: 20 U.S.C. 1099b)

Subpart C—The Recognition Process

Application and Review by Department Staff

§ 602.30 How does an agency apply for recognition?

(a) An accrediting agency seeking initial or continued recognition must submit a written application to the Secretary. The application must consist of—

(1) A statement of the agency's requested scope of recognition;

(2) Evidence that the agency complies with the criteria for recognition listed in subpart B of this part; and

(3) Supporting documentation.

(b) By submitting an application for recognition, the agency authorizes Department staff to observe its site visits and decision meetings and to gain access to agency records, personnel, and facilities on an announced or unannounced basis.

(c) The Secretary does not make available to the public any confidential agency materials a Department employee reviews during the evaluation of either the agency's application for recognition or the agency's compliance with the criteria for recognition.

(Authority: 20 U.S.C. 1099b)

§ 602.31 How does Department staff review an agency's application?

(a) Upon receipt of an agency's application for either initial or continued recognition, Department staff—

(1) Establishes a schedule for the review of the agency by Department staff, the National Advisory Committee on Institutional Quality and Integrity, and the Secretary;

(2) Publishes a notice of the agency's application in the **Federal Register**, inviting the public to comment on the agency's compliance with the criteria for recognition and establishing a deadline for receipt of public comment; and

(3) Provides State licensing or authorizing agencies, all currently recognized accrediting agencies, and other appropriate organizations with copies of the **Federal Register** notice.

(b) Department staff analyzes the agency's application to determine

whether the agency satisfies the criteria for recognition, taking into account all available relevant information concerning the compliance of the agency with those criteria and any deficiencies in the agency's performance with respect to the criteria. The analysis in cludes—

(1) Site visits, on an announced or unannounced basis, to the agency and, at the Secretary's discretion, to some of the institutions or programs it accredits or preaccredits;

(2) Review of the public comments and other third-party information the Department staff receives by the established deadline, as well as any other information Department staff assembles for purposes of evaluating the agency under this part; and

(3) Review of complaints or legal actions involving the agency.

(c) Department staff's evaluation may also include a review of information directly related to institutions or programs accredited or preaccredited by the agency relative to their compliance with the agency's standards, the effectiveness of the standards, and the agency's application of those standards.

(d) If, at any point in its evaluation of an agency seeking initial recognition, Department staff determines that the agency fails to demonstrate substantial compliance with the basic eligibility requirements in §§ 602.10 through 602.13, the staff—

(1) Returns the agency's application and provides the agency with an explanation of the deficiencies that caused staff to take that action; and

(2) Recommends that the agency withdraw its application and reapply when the agency can demonstrate compliance.

(e) Except with respect to an application that is withdrawn under paragraph (d) of this section, when Department staff completes its evaluation of the agency, the staff—

(1) Prepares a written analysis of the agency, which includes a recognition recommendation;

(2) Sends the analysis and all supporting documentation, including all third-party comments the Department received by the established deadline, to the agency no later than 45 days before the Advisory Committee meeting; and

(3) Invites the agency to provide a written response to the staff analysis and third-party comments, specifying a deadline for the response that is at least two weeks before the Advisory Committee meeting.

(f) If Department staff fails to provide the agency with the materials described in paragraph (e)(2) of this section at least 45 days before the Advisory Committee meeting, the agency may request that the Advisory Committee defer acting on the application at that meeting. If Department staff's failure to send the materials at least 45 days before the Advisory Committee meeting is due to the failure of the agency to submit reports or other information the Secretary requested by the deadline the Secretary established, the agency forfeits its right to request a deferral.

(g) Department staff reviews any response to the staff analysis that the agency submits. If necessary, Department staff prepares an addendum to the staff analysis and provides the agency with a copy.

(h) Before the Advisory Committee meeting, Department staff provides the Advisory Committee with the following information:

(1) The agency's application for recognition and supporting documentation.

(2) The Department staff analysis of the agency.

(3) Any written third-party comments the Department received about the agency on or before the established deadline.

(4) Any agency response to either the Department staff analysis or third-party comments.

(5) Any addendum to the Department staff analysis.

(6) Any other information Department staff relied on in developing its analysis.

(i) At least 30 days before the Advisory Committee meeting, the Department publishes a notice of the meeting in the **Federal Register** inviting interested parties, including those who submitted third-party comments concerning the agency's compliance with the criteria for recognition, to make oral presentations before the Advisory Committee.

(Authority: 20 U.S.C. 1099b)

Review by the National Advisory Committee on Institutional Quality and Integrity

§ 602.32 What is the role of the Advisory Committee and the senior Department official in the review of an agency's application?

(a) The Advisory Committee considers an agency's application for recognition at a public meeting and invites Department staff, the agency, and other interested parties to make oral presentations at the meeting. A transcript is made of each Advisory Committee meeting.

(b) When it concludes its review, the Advisory Committee recommends that the Secretary either approve or deny recognition or that the Secretary defer a decision on the agency's application for recognition.

(1)(i) The Advisory Committee recommends approval of recognition if the agency complies with the criteria for recognition listed in subpart B of this part and if the agency is effective in its performance with respect to those criteria.

(ii) If the Advisory Committee recommends approval, the Advisory Committee also recommends a recognition period and a scope of recognition.

(iii) If the recommended scope or period of recognition is less than that requested by the agency, the Advisory Committee explains its reasons for recommending the lesser scope or recognition period.

(2)(i) If the agency fails to comply with the criteria for recognition in subpart B of this part, or if the agency is not effective in its performance with respect to those criteria, the Advisory Committee recommends denial of recognition, unless the Advisory Committee concludes that a deferral under paragraph (b)(3) of this section is warranted.

(ii) If the Advisory Committee recommends denial, the Advisory Committee specifies the reasons for its recommendation, including all criteria the agency fails to meet and all areas in which the agency fails to perform effectively.

(3)(i) The Advisory Committee may recommend deferral of a decision on recognition if it concludes that the agency's deficiencies do not warrant immediate loss of recognition and if it concludes that the agency will demonstrate or achieve compliance with the criteria for recognition and effective performance with respect to those criteria before the expiration of the deferral period.

(ii) In its deferral recommendation, the Advisory Committee states the bases for its conclusions, specifies any criteria for recognition the agency fails to meet, and identifies any areas in which the agency fails to perform effectively with respect to the criteria.

(iii) The Advisory Committee also recommends a deferral period, which may not exceed 12 months, either alone or in combination with any expiring deferral period in which similar deficiencies in compliance or performance were cited by the Secretary.

(c) At the conclusion of its meeting, the Advisory Committee forwards its recommendations to the Secretary through the senior Department official.

(d) For any Advisory Committee recommendation not appealed under

§ 602.33, the senior Department official includes with the Advisory Committee materials forwarded to the Secretary a memorandum containing the senior Department official's recommendations regarding the actions proposed by the Advisory Committee.

(Authority: 20 U.S.C. 1099b and 1145)

§ 602.33 How may an agency appeal a recommendation of the Advisory Committee?

(a) Either the agency or the senior Department official may appeal the Advisory Committee's recommendation. If a party wishes to appeal, that party must—

(1) Notify the Secretary and the other party in writing of its intent to appeal the recommendation no later than 10 days after the Advisory Committee meeting;

(2) Submit its appeal in writing to the Secretary no later than 30 days after the Advisory Committee meeting; and

(3) Provide the other party with a copy of the appeal at the same time it submits the appeal to the Secretary.

(b) The non-appealing party may file a written response to the appeal. If that party wishes to do so, it must—

(1) Submit its response to the Secretary no later than 30 days after receiving its copy of the appeal; and

(2) Provide the appealing party with a copy of its response at the same time it submits its response to the Secretary.

(c) Neither the agency nor the senior Department official may include any new evidence in its submission; i.e., evidence it did not previously submit to the Advisory Committee.

(Authority: 20 U.S.C. 1099b and 1145)

Review and Decision by the Secretary

§ 602.34 What does the Secretary consider when making a recognition decision?

The Secretary makes the decision regarding recognition of an agency based on the entire record of the agency's application, including the following:

(a) The Advisory Committee's recommendation.

(b) The senior Department official's recommendation, if any.

(c) The agency's application and supporting documentation.

(d) The Department staff analysis of the agency.

(e) All written third-party comments forwarded by Department staff to the Advisory Committee for consideration at the meeting.

(f) Any agency response to the Department staff analysis and third-party comments.

(g) Any addendum to the Department staff analysis.

(h) All oral presentations at the Advisory Committee meeting.

(i) Any materials submitted by the parties, within the established timeframes, in an appeal taken in accordance with § 602.33.

(Authority: 20 U.S.C. 1099b)

§ 602.35 What information does the Secretary's recognition decision include?

(a) The Secretary notifies the agency in writing of the Secretary's decision regarding the agency's application for recognition.

(b) The Secretary either approves or denies recognition or defers a decision on the agency's application for recognition.

(1)(i) The Secretary approves recognition if the agency complies with the criteria for recognition listed in subpart B of this part and if the agency is effective in its performance with respect to those criteria.

(ii) If the Secretary approves recognition, the Secretary's recognition decision defines the scope of recognition and the recognition period.

(iii) If the scope or period of recognition is less than that requested by the agency, the Secretary explains the reasons for approving a lesser scope or recognition period.

(2)(i) If the agency fails to comply with the criteria for recognition in subpart B of this part, or if the agency is not effective in its performance with respect to those criteria, the Secretary denies recognition, unless the Secretary concludes that a deferral under paragraph (b)(3) of this section is warranted.

(ii) If the Secretary denies recognition, the Secretary specifies the reasons for this decision, including all criteria the agency fails to meet and all areas in which the agency fails to perform effectively.

(3)(i) The Secretary may defer a decision on recognition if the Secretary concludes that the agency's deficiencies do not warrant immediate loss of recognition and if the Secretary concludes that the agency will demonstrate or achieve compliance with the criteria for recognition and effective performance with respect to those criteria before the expiration of the deferral period.

(ii) In the deferral decision, the Secretary states the bases for the Secretary's conclusions, specifies any criteria for recognition the agency fails to meet, and identifies any areas in which the agency fails to perform effectively with respect to the criteria.

(iii) The Secretary also establishes a deferral period, which does not exceed 12 months, either alone or in combination with any expiring deferral period in which similar deficiencies in compliance or performance were cited by the Secretary, except that the Secretary may grant an extension of an expiring deferral period at the request of the agency for good cause shown.

(c) The recognition period may not exceed five years.

(d) If the Secretary does not reach a final decision on an agency's application for continued recognition before the expiration of its recognition period, the Secretary automatically extends the recognition period until the final decision is reached.

(Authority: 20 U.S.C. 1099b)

§ 602.36 May an agency appeal the Secretary's final recognition decision?

An agency may appeal the Secretary's decision under this part in the Federal courts as a final decision in accordance with applicable Federal law.

(Authority: 20 U.S.C. 1099b)

Subpart D—Limitation, Suspension, or Termination of Recognition

Limitation, Suspension, and Termination Procedures

§ 602.40 How may the Secretary limit, suspend, or terminate an agency's recognition?

(a) If the Secretary determines, after notice and an opportunity for a hearing, that a recognized agency does not comply with the criteria for recognition in subpart B of this part or that the agency is not effective in its performance with respect to those criteria, the Secretary—

(1) Limits, suspends, or terminates the agency's recognition; or

(2) Requires the agency to take appropriate action to bring itself into compliance with the criteria and achieve effectiveness within a timeframe that may not exceed 12 months.

(b) If, at the conclusion of the timeframe specified in paragraph (a)(2) of this section, the Secretary determines, after notice and an opportunity for a hearing, that the agency has failed to bring itself into compliance or has failed to achieve effectiveness, the Secretary limits, suspends, or terminates recognition, unless the Secretary extends the timeframe, on request by the agency for good cause shown.

(Authority: 20 U.S.C. 1099b)

§ 602.41 What are the notice procedures?

(a) Department staff initiates an action to limit, suspend, or terminate an agency's recognition by notifying the agency in writing of the Secretary's

intent to limit, suspend, or terminate recognition. The notice—

(1) Describes the specific action the Secretary seeks to take against the agency and the reasons for that action, including the criteria with which the agency has failed to comply;

(2) Specifies the effective date of the action; and (3) Informs the agency of its right to respond to the notice and request a hearing.

(b) Department staff may send the notice described in paragraph (a) of this section at any time the staff concludes that the agency fails to comply with the criteria for recognition in subpart B of this part or is not effective in its performance with respect to those criteria.

(Authority: 20 U.S.C. 1099b)

§ 602.42 What are the response and hearing procedures?

(a) If the agency wishes either to respond to the notice or request a hearing, or both, it must do so in writing no later than 30 days after it receives the notice of the Secretary's intent to limit, suspend, or terminate recognition.

(1) The agency's submission must identify the issues and facts in dispute and the agency's position on them.

(2) If neither a response nor a request for a hearing is filed by the deadline, the notice of intent becomes a final decision by the Secretary.

(b)(1) After receiving the agency's response and hearing request, if any, the Secretary chooses a subcommittee composed of five members of the Advisory Committee to adjudicate the matter and notifies the agency of the subcommittee's membership.

(2) The agency may challenge membership of the subcommittee on grounds of conflict of interest on the part of one or more members and, if the agency's challenge is successful, the Secretary will replace the member or members challenged.

(c) After the subcommittee has been selected, Department staff sends the members of the subcommittee copies of the notice to limit, suspend, or terminate recognition, along with the agency's response, if any.

(d)(1) If a hearing is requested, it is held in Washington, DC, at a date and time set by Department staff.

(2) A transcript is made of the hearing.

(3) Except as provided in paragraph (e) of this section, the subcommittee allows Department staff, the agency, and any interested party to make an oral or written presentation, which may include the introduction of written and oral evidence.

(e) On agreement by Department staff and the agency, the subcommittee review may be based solely on the written materials submitted.

(Authority: 20 U.S.C. 1099b)

§ 602.43 How is a decision on limitation, suspension, or termination of recognition reached?

(a) After consideration of the notice of intent to limit, suspend, or terminate recognition, the agency's response, if any, and all submissions and presentations made at the hearing, if any, the subcommittee issues a written opinion and sends it to the Secretary, with copies to the agency and the senior Department official. The opinion includes—

(1) Findings of fact, based on consideration of all the evidence, presentations, and submissions before the subcommittee;

(2) A recommendation as to whether a limitation, suspension, or termination of the agency's recognition is warranted; and

(3) The reasons supporting the subcommittee's recommendation.

(b) Unless the subcommittee's recommendation is appealed under § 602.44, the Secretary issues a final decision on whether to limit, suspend, or terminate the agency's recognition. The Secretary bases the decision on consideration of the full record before the subcommittee and the subcommittee's opinion.

(Authority: 20 U.S.C. 1099b)

Appeal Rights and Procedures

§ 602.44 How may an agency appeal the subcommittee's recommendation?

(a) Either the agency or the senior Department official may appeal the subcommittee's recommendation. If a party wishes to appeal, that party must—

(1) Notify the Secretary and the other party in writing of its intent to appeal the recommendation no later than 10 days after receipt of the recommendation;

(2) Submit its appeal to the Secretary in writing no later than 30 days after receipt of the recommendation; and

(3) Provide the other party with a copy of the appeal at the same time it submits the appeal to the Secretary.

(b) The non-appealing party may file a written response to the appeal. If that party wishes to do so, it must—

(1) Submit its response to the Secretary no later than 30 days after receiving its copy of the appeal; and

(2) Provide the appealing party with a copy of its response at the same time it submits its response to the Secretary.

(c) Neither the agency nor the senior Department official may include any new evidence in its submission, i.e., evidence it did not previously submit to the subcommittee.

(d) If the subcommittee's recommendation is appealed, the Secretary renders a final decision after taking into account that recommendation and the parties' written submissions on appeal, as well as the entire record before the subcommittee and the subcommittee's opinion.

(Authority: 20 U.S.C. 1099b)

§ 602.45 May an agency appeal the Secretary's final decision to limit, suspend, or terminate its recognition?

An agency may appeal the Secretary's final decision limiting, suspending, or terminating its recognition to the Federal courts as a final decision in accordance with applicable Federal law.

(Authority: 20 U.S.C. 1099b)

Subpart E—Department Responsibilities

§ 602.50 What information does the Department share with a recognized agency about its accredited institutions and programs?

(a) If the Department takes an action against an institution or program accredited by the agency, it notifies the agency no later than 10 days after taking that action.

(b) If another Federal agency or a State agency notifies the Department that it has taken an action against an institution or program accredited by the agency, the Department notifies the agency as soon as possible but no later than 10 days after receiving the written notice from the other Government agency.

(Authority: 20 U.S.C. 1099b)

Appendix—Distribution Table Showing The Reorganization of The Current Regulations

Note: The following appendix will not appear in the Code of Federal Regulations.

The following table shows where each section of the current regulations is found in the proposed regulations.

Section in current regulations	Location in proposed regulations
§ 602.1	§§ 602.1 and 602.10.
§ 602.2	§ 602.3.
§ 602.3	§ 602.14.
§ 602.4	§§ 602.26 and 602.27.
§ 602.5	§ 602.50.
§ 602.10	§ 602.30.
§ 602.11	§ 602.31.
§ 602.12	§§ 602.32 and 602.33.
§ 602.13	§§ 602.3, 602.34, and 602.35.

Section in current regulations	Location in proposed regulations
§ 602.14	§§ 602.40 through 602.44.
§ 602.15	§§ 602.36 and 602.45.
§ 602.16	§ 602.2.
§ 602.20	§ 602.11.
§ 602.21	§ 602.15.
§ 602.22	§§ 602.12 and 602.13.
§ 602.23	§§ 602.18, 602.21, and 602.23.
§ 602.24	§§ 602.17, 602.19, and 602.23.
§ 602.25	§ 602.22.
§ 602.26	§§ 602.16, 602.18, and 602.20.
§ 602.27	§§ 602.23 and 602.24.
§ 602.28	§ 602.25.
§ 602.29	§ 602.26.
§ 602.30	§ 602.28.

[FR Doc. 99–16143 Filed 6–24–99; 8:45 am]

BILLING CODE 4000–01–P

federal register

Friday
June 25, 1999

Part V

Federal Communications Commission

47 CFR Part 64

Truth-in-Billing and Billing Format; Final Rule and Proposed Rule

FEDERAL COMMUNICATIONS COMMISSION

47 CFR Part 64

[CC Docket 98–170; FCC 99–72]

Truth-in-Billing and Billing Format

AGENCY: Federal Communications Commission

ACTION: Final rule.

SUMMARY: This document establishes common-sense billing principles to ensure that consumers are provided with basic information they need to make informed choices among telecommunications services and providers. First, consumer telephone bills must be clearly organized, clearly identify the service provider, and highlight any new providers. Second, bills must contain full and non-misleading descriptions of charges that appear therein. Third, bills must contain clear and conspicuous disclosure of any information the consumer may need to make inquiries about, or contest charges, on the bill. These requirements are intended to protect consumers against inaccurate and unfair billing practices. More specifically, the principles adopted herein will enhance consumers' ability to detect cramming and slamming.

DATES: These rules which contain information collection requirements are effective upon OMB approval, but no sooner than thirty (30) days after publication in the Federal Register. The Commission will publish a document in the Federal Register announcing the effective date.

FOR FURTHER INFORMATION CONTACT: Enforcement Division, Common Carrier Bureau. (202) 418–0960.

SUPPLEMENTARY INFORMATION:

I. The Importance of Clear and Informative Bills in Competitive Telecommunications Markets

1. In this Order, we undertake common-sense steps to ensure that consumers are provided with basic information they need to make informed choices in a competitive telecommunications marketplace, while at the same time protecting themselves from unscrupulous competitors. We believe that the ''truth-in-billing'' principles adopted herein will significantly further consumers' opportunity to reap fully the benefits envisioned by the Telecommunications Act of 1996 (1996 Act), which amended the Communications Act of 1934 (Act).

2. In this Order, we adopt generally the ''truth-in-billing'' principles proposed in the Proposed Rules, 63 FR 55077, in order to ensure that consumers receive thorough, accurate, and understandable bills from their telecommunications carriers. Specifically, we will require:

(1) That consumer telephone bills be clearly organized, clearly identify the service provider, and highlight any new providers;

(2) That bills contain full and non-misleading descriptions of charges that appear therein; and,

(3) That bills contain clear and conspicuous disclosure of any information the consumer may need to make inquiries about, or contest charges, on the bill.

Additionally, we adopt minimal, basic guidelines that explicate carriers' binding obligations pursuant to these broad principles. These principles and guidelines are designed to prevent the types of consumer fraud and confusion evidenced in the tens of thousands of complaints we have received. Moreover, we believe that they represent fundamental principles of fairness to consumers and just and reasonable practices by carriers.

3. By implementing these principles through broad, binding guidelines as described more fully below, we allow carriers considerable discretion to satisfy their obligations in a manner that best suits their needs and those of their customers. Thus, carriers that wish to distinguish themselves through creative and consumer-friendly billing formats have wide latitude to compete in this manner (*i.e.*, by producing bills on 8½×11 inch paper).

II. Truth-in-Billing Principles

A. Adoption of Guidelines

4. Through this Order, we adopt broad, binding principles to promote truth-in-billing, rather than mandate detailed rules that would rigidly govern the details or format of carrier billing practices. We envision that carriers may satisfy these obligations in widely divergent manners that best fit their own specific needs and those of their customers. Indeed, our decision to adopt broad, binding principles, rather than detailed, comprehensive rules, reflects a recognition that there are typically many ways to convey important information to consumers in a clear and accurate manner.

5. Yet purely voluntary guidelines would be insufficient to combat misleading bills that facilitate slamming and cramming. The extent of the current problem shows that voluntary action alone is inadequate for many carriers. Failure to codify these principles and implementing guidelines might result in carriers ignoring our requirements, to the detriment of consumers. Our Order permits carriers to render bills using the format of their choice, so long as the bills comply with the implementing guidelines that we adopt today. We consider our principles and guidelines to be flexible enough that carriers will be able to comply with them without incurring unnecessary expense. In fact, we note that many carriers commented that their current practices already comport with proposals we outlined in the Proposed Rules.

6. *Commercial Mobile Radio Service (CMRS) Carriers.* We believe that the broad principles we adopt to promote truth-in-billing should apply to all telecommunications carriers, both wireline and wireless. The principles we adopt today represent fundamental statements of fair and reasonable practices. Like wireline carriers, wireless carriers also should be fair, clear, and truthful in their billing practices.

7. The record does not, however, reflect the same high volume of customer complaints in the CMRS context, nor does the record indicate that CMRS billing practices fail to provide consumers with the clear and non-misleading information they need to make informed choices. If current CMRS billing practices are clear and non-misleading to consumers, then it might be appropriate either to forbear from specific wireline rules or not to apply them in the first instance. Furthermore, in some instances, the rules we have adopted might simply be inapplicable in the wireless context.

8. Despite the fact that some rules may be inapplicable or unnecessary in the CMRS context, there are two rules that we think are so fundamental that they should apply to all telecommunications common carriers: (1) that the name of the service provider associated with each charge be clearly identified on the bill; and (2) that each bill should prominently display a telephone number that customers may call free-of-charge in order to inquire or dispute any charge contained on the bill.

9. We also intend to require CMRS carriers to comply with standardized labels for charges resulting from Federal regulatory action, if and when such requirements are adopted. As a practical matter, this rule will not apply until we issue an order that adopts the standard labels for federal line-item charges. We expect to apply the same rule to both wireline and CMRS carriers, however, because we believe that labels assigned to charges related to federal regulatory

action should be consistent, understandable, and should not confuse or mislead customers.

B. Legal Authority

10. We find that our authority to enact the truth-in-billing guidelines set forth herein stems from both section 201(b) and section 258 of the Act. Section 201(b) requires that all carrier charges, practices, classifications, and regulations ''for and in connection with'' interstate communications service be just and reasonable, and gives the Commission jurisdiction to enact rules to implement that requirement. Section 258 of the Act further authorizes the Commission to adopt verification requirements to deter slamming in both the interstate and the intrastate markets. The Supreme Court has ruled that section 201(b) provides the Commission with authority to implement all of the provisions of the Act, including those that apply to intrastate communications. As explained in this Order, with the exception of the guideline discussed at section II(C)(2)(c) of this Order, which involves standardized labels for charges relating to federal regulatory action, the truth-in-billing principles and guidelines adopted herein are justified as slamming verification requirements pursuant to section 258, and thus can be applied to both interstate and intrastate services. We recognize, however, that the standardized label guideline rests exclusively on our authority under section 201(b) and therefore is limited to interstate services.

C. Specific Truth-in-Billing Guidelines

1. Clear Organization and Highlighting New Service Provider Information

11. We adopt the threshold principle set forth in the Proposed Rules that telephone bills must be clearly organized and highlight new service provider information. We conclude that such a basic principle is essential to facilitate consumers' understanding of services for which they are being charged, and thereby discourage consumer fraud such as slamming. The goal of these requirements is to deter slamming, as well as cramming, and accordingly, we possess jurisdiction to impose these requirements under sections 201(b) and 258 of the Act. Based on our review of the record and experience handling consumer complaints of fraudulent carrier practices, we further conclude that implementation of this principle translates into three broad, binding guidelines on which we sought comment in the Proposed Rules: (1) The name of the service provider associated with each charge must be clearly identified; (2) charges must be separated by service provider; and (3) clear and conspicuous notification of any change in service provider must be made manifest. Through ensuring that the billed information concerning service providers is clear and conspicuous, these guidelines enhance consumers' ability to review individual charges contained in their telephone bills and detect unwarranted charges or unauthorized changes in their service arrangements.

12. In our view, a clear description of the name of the service provider is both rudimentary to any reasonable billing practice and essential to combat unfair carrier practices, including slamming and cramming. Consumers will be able to detect whether or when they have been slammed, crammed, or even overcharged only if they can readily identify their current service providers. Clear identification of service providers is also an essential predicate for consumers to be able to communicate complaints and dispute billed charges. Indeed, our complaint experience suggests that consumers are both confused and potentially hampered in obtaining information about billed charges or lodging complaints when the only entity name associated with a charge is, for example, that of a ''billing aggregator.'' Regardless of whether the billing aggregator can handle the consumer inquiry or complaint on behalf of the service provider, we believe that identification of the service provider is essential to enable consumers to monitor their service arrangements and judge the accuracy of the charges levied. Accordingly, we find that the name of the service provider must be clearly listed on the bill in connection with that entity's charges to the consumer.

13. We conclude that, where telephone bills include charges from more than one service provider, the charges should be displayed according to service provider with clear visual separation—although not necessarily separate pages—to distinguish the different providers. We believe that listing charges by service provider should produce bills that can be reviewed by consumers more easily than those that would list charges by service type, and facilitate the prompt detection of unreasonable and fraudulent carrier practices. For instance, if a consumer were slammed, a bill segregated by provider would show, in a distinct portion of the bill, all the charges billed on behalf of the unauthorized carrier. A bill segregated by service type, on the other hand, could list together long distance charges from the unauthorized carrier, the authorized carrier, and any carrier that was used to place dial-around calls. This intermingling of authorized and unauthorized charges could make it more difficult for a consumer to realize that he or she has been slammed.

14. As a final corollary to our guidelines concerning providers, we conclude that new service providers must be clearly and conspicuously identified on the bill. We contemplate that such clear and conspicuous identification would involve all service providers that did not bill for services on the previous billing statement, and would describe, where applicable, any new presubscribed or continuing relationship with the customer. Clear identification of new service providers will improve consumers' ability to detect slamming and cramming. For instance, consumers' discovery of fraudulent charges would be prompted by noticing that an unfamiliar service provider has charges appearing on the bill. Indeed, because cramming complaints most commonly emanate from charges levied by service providers that do not have a pre-existing business relationship with the consumer, highlighting the name of a new service provider should prompt a subscriber to examine closely the particular charges billed by that provider and facilitate detection of cramming.

15. Carriers have discretion to determine the best means to highlight the required information; we do not require that separate bill pages be used to show the charges billed by each service provider. Again, we are cognizant of commenters' concerns that any rigid formatting rule that required separate pages, or produced ''dead space'' on the bill, may frustrate consumers and substantially, or even prohibitively, increase carriers' billing expenses. Accordingly, we do not mandate any particular means of complying with the guidelines set forth herein, but rather permit and contemplate that carriers will employ a variety of practices that would be consistent with this Order. In adopting a provider-based guideline and affording wide latitude to determine the most efficient way to convey the service provider information, we have balanced consumers' need for clear, logical, and easily understood charges against concerns that rigid formatting and disclosure requirements would inhibit innovation and greatly increase carrier costs.

2. Full and Non-Misleading Billed Charges

16. We adopt the second core principle set forth in the Proposed Rules that bills should contain full and non-misleading descriptions of the service charges that appear therein. In our view, providing clear communication and disclosure of the nature of the service for which payment is expected is fundamental to a carrier's obligation of reasonable charges and practices. Indeed, we find it difficult to imagine any scenario where payment could be lawfully demanded on the basis of inaccurate, incomplete, or misleading information. Moreover, to permit such practices in the context of telecommunications services is particularly troublesome in light of the rapid technological and market developments, and associated new terminology, that can confuse even the most informed and savvy telecommunications consumer. Accordingly, as discussed below, we adopt three guidelines that implement this core disclosure principle.

a. Billing Descriptions

17. We conclude that services included on the telephone bill must be accompanied by a brief, clear, plain language description of the services rendered. The description of the charge must be sufficiently clear in presentation and specific enough in content so that customers can accurately assess that the services for which they are billed correspond to those that they have requested and received, and that the costs assessed for those services conform to their understanding of the price charged. Requiring clear descriptions of billed charges will assist consumers in understanding their bills, and thereby, deter slamming, as well as cramming.

18. We contemplate that sufficient descriptions will convey enough information to enable a customer reasonably to identify and to understand the service for which the customer is being charged. Conversely, descriptions that convey ambiguous or vague information, such as, for example, charges identified as ''miscellaneous,'' would not conform to our guideline. Similarly, in our view, a charge described by what it is *not*, such as, for example, ''service not regulated by the Public Service Commission'' is inherently ambiguous and does not disclose sufficient information. There is no way for a consumer to discern from this description that the charge refers to, for example, inside wiring maintenance insurance.

19. Although carriers must provide sufficient information, we emphasize that full descriptions do not mean redundant or unnecessary explanations. In particular, carriers need not define those terms that are already generally understood by consumers, such as ''local service'' or ''long distance service.'' Similarly, carriers need not identify every long distance call as being a long distance call. Rather, they may simply identify a section of the telephone bill as ''long distance service,'' followed by an itemized description of calls showing the destination cities, the numbers dialed, the date, and the charge for each call. We do not prescribe any particular methods of presentation, organization, or language, but rather encourage carriers to be innovative in designing bills that provide clear descriptions of services rendered.

20. Although we decline to formulate standardized descriptions, we encourage carriers to develop uniform terminology. We believe that industry is better equipped than the Commission to develop, in conjunction with consumer focus groups, standardized descriptions that are compatible with the character limitations for text messages and other operational restrictions found in the systems currently used for billing. Adopting understandable common descriptions for services offered could enable consumers to comparison shop more readily, and thereby take full advantage of the benefits of a competitive telecommunications market.

b. ''Deniable'' and ''Non-Deniable'' Charges

21. We further conclude that, where additional carrier charges are billed along with local wireline service, reasonable practice necessitates that carriers clarify when non-payment for service would not result in the termination of the consumer's basic local service. More specifically, we adopt the guideline we proposed in the Proposed Rules that telephone bills differentiate between what are commonly referred to as ''deniable'' and ''non-deniable'' charges. A ''deniable'' charge is a charge that, if not paid, may result in the termination—''denial''—of the customer's local exchange service. Conversely, a ''non-deniable'' charge is a charge that will not result in the termination of the customer's basic service for non-payment, even though the particular service for which the charge has been levied, *e.g.*, paging service, could be terminated. We agree with the comments of state regulatory agencies and consumer advocacy groups that distinguishing between such charges on consumers' bills protects consumers from paying contestable, unauthorized charges out of fear of losing basic telephone service for non-payment. We agree that consumers should not be intimidated into paying contestable charges because of fear that they will lose telephone service. We likewise believe that consumers must be fully empowered and apprised of their right to refuse to pay for unauthorized charges. Accordingly, we conclude that carriers must clearly identify on bills those charges for which non-payment will not result in disconnection of basic, local service.

22. We agree with those commenters who state that the terms ''deniable'' and ''non-deniable'' are inherently confusing, if not counter-intuitive, and therefore fail to achieve the basic goal of signalling to consumers their rights with respect to such charges. Rather than mandate any particular means for accomplishing this goal, however, we merely require that carriers clearly and conspicuously identify those charges for which nonpayment will not result in termination of local service.

23. We emphasize, however, that this guideline only applies where carriers include in a single bill both ''deniable'' and ''non-deniable'' charges. Accordingly, a carrier that bills directly for service that includes no charges for basic, local wireline service would not have a disclosure obligation. In this direct billing circumstance, we are persuaded that consumers understand that, for example, their wireless or interexchange service may be disconnected should they fail to pay the bill for the specific service involved, but that their basic local service, billed on a separate invoice, will not be disconnected. Accordingly, requiring carriers to disclose such information on direct bills that contain no basic local service charges would place a burden on carriers without any corresponding consumer benefit. We further note that, whether a charge is or is not ''deniable'' varies according to state law. Our requirement is not meant to preempt states that have yet to adopt such a distinction.

24. We are unpersuaded by some commenters that customers should be informed of these rights through a ''dunning message'' issued prior to termination of service for non-payment, rather than through the telephone bill. Such an approach does not protect those consumers who pay charges that they did not authorize out of the mistaken fear that their service will be disconnected if they fail to pay. The complaints we receive demonstrate that

many consumers pay disputable charges immediately, even if they believe the charge is unauthorized, out of fear of losing local service. These consumers would not receive any dunning notice and, thus, would remain unaware of their rights with regard to these charges.

c. Standardized Labels For Charges Resulting from Federal Regulatory Action

25. We conclude that the principle of full and non-misleading descriptions also extends to carrier charges purportedly associated with federal regulatory action. Consistent with our core principle that charges should be clearly described in a manner that allows consumers to understand them, we expressed concern in the Proposed Rules that consumers may be less likely to engage in comparative shopping among service providers if they are led erroneously to believe that certain rates or charges are federally mandated amounts from which individual carriers may not deviate. Moreover, we noted that complaints received by the Commission indicate considerable consumer confusion with regard to various line item charges appearing on their monthly service bills that are assessed by carriers ostensibly to recover costs incurred as a result of specific government action. Charges resulting from federal regulatory action are ''charges, practices [or] classifications * * * for and in connection with'' interstate communication service pursuant to section 201(b), and accordingly, we possess jurisdiction to require carriers to employ standardized labels for such charges.

26. We find that the substantial record on this issue supports our adoption of guidelines to address customers' confusion and potential for misunderstanding concerning the nature of these charges. Specifically, for the reasons discussed more fully below, we adopt our proposals that require carriers to identify line item charges associated with federal regulatory action through a standard industry-wide label and provide full, clear and non-misleading descriptions of the nature of the charges, and display a toll-free number associated with the charge for customer inquiries. While we adopt guidelines to facilitate consumer understanding of these charges and comparison among service providers, we decline the recommendations of those that would urge us to limit the manner in which carriers recover these costs of doing business.

27. We focus particularly on three types of line items that have appeared on consumers' bills. Specifically, the 1996 Act instructed the Commission to establish support mechanisms to ensure that all Americans have access to affordable telecommunications services. Pursuant to this directive, the Commission is in the process of fundamentally altering the manner in which long distance carriers pay for access to the networks of local carriers and for supporting the universal availability of telecommunications services at just, reasonable, and affordable rates. Although the Commission did not direct the manner in which carriers could recover their universal service contributions or access fees directly from their customers, and substantially reduced the access rates charged to long distance carriers to offset their new universal service obligations, some carriers began including on their customers' bills line item charges purportedly intended to recover these costs. These fees have been charged in connection with consumers' long distance service. The amounts charged and the name describing the universal service-related fees, however, have varied considerably among carriers. For example, some carriers have labelled the fee as ''Universal Connectivity Charge,'' ''Federal Universal Service Fee,'' ''Carrier Universal Service Charge,'' and even ''Local Service Subsidy,'' and charges have ranged from $.93 per bill to 5% of the customers' net interstate and international charges. Access related charges and associated names have likewise varied by carrier. The nature of these charges is, in some instances, further confused because different charges may be assessed on the consumer's ''primary,'' or first line, than on a consumer's subsequent or ''non-primary'' lines.

28. Local exchange carriers have also chosen to assess various line item charges associated with federal regulatory action. Since 1985, the Commission has allowed local exchange carriers to assess a ''subscriber line charge,'' (SLC), also known as the end-user common line charge. This charge allows local exchange carriers to recover a portion of the costs for providing local loops. More recently, pursuant to the dictates of the 1996 Act, the Commission permitted local exchange carriers to recover through a line-item charge on end-user bills the costs associated with implementing local number portability, which allows a consumer to retain the same phone number when changing local phone companies. This local number portability charge first appeared on some consumers' bills in February, 1999. The amount of the charge, however, as well as the name describing it varies by carrier (*e.g.*, ''number portability surcharge;'' ''local number portability service charge;'' ''federal charge—service provider number portability'').

29. The record in this proceeding supports our concern that the failure of carriers to label and accurately describe certain line item charges on their bills has led to increased consumer confusion about the nature of these changes. Several factors appear to have contributed to this confusion. The names associated with these charges as well as accompanying descriptions (or entire lack thereof) may convince consumers that all of these fees are federally mandated. In addition, a lack of consistency in the way such charges are labelled by carriers makes it difficult for consumers accurately to compare the price of telecommunications services offered by competing carriers.

30. We adopt the guideline proposed in our Proposed Rules that line-item charges associated with federal regulatory action should be identified through standard and uniform labels across the industry. We agree that standardized labels will promote consumers' ability to understand their bills, thus facilitating their ability to compare rates and packages among competing providers. Such comparisons are very difficult when carriers choose different names for the same charge. In considering which specific labels would be most accurate, descriptive and consumer-friendly, however, we believe that consumer groups are particularly well suited to assist in the development of the uniform terms. Accordingly, through a Further Notice of Proposed Rules in this proceeding, we encourage consumer and industry groups to come together, conduct consumer focus groups, and propose jointly to the Commission standard labels for these line item charges. We will choose the standard labels based on the suggestions we receive in response to our Further Notice of Proposed Rules.

31. We decline to take a more prescriptive approach as to how carriers may recover these costs. We recognize that several commenters assert that service providers should be required to combine all regulatory fees into one charge, or should be prohibited from separating out any fees resulting from regulatory action. Other commenters urge us to go even farther and require carriers to include on bills per-minute rates that include all fees associated with the service. We decline at this time to mandate such requirements, but rather prefer to afford carriers the

freedom to respond to consumer and market forces individually, and consider whether to include these charges as part of their rates, or to list the charges in separate line items. We believe that so long as we ensure that consumers are readily able to understand and compare these charges, competition should ensure that they are recovered in an appropriate manner. Moreover, we are concerned that precluding a breakdown of line item charges would facilitate carriers' ability to bury costs in lump figures. Insofar as the regulatory-related charges have different origins, and are applied to different service and provider offerings, we also question whether implementation of a lump-sum figure for all charges resulting from federal regulatory action could be presented in a manner in which consumers could clearly understand the origin of such a charge. On the other hand, we recognize that consumers may benefit from a simplified, total charge approach. As a result, we encourage industry and consumer groups to consider further whether some categorization and aggregation of charges would be advisable. For example, we seek further comment on whether the line item charges associated with long distance service could be or should be identified as a single, uniformly described, charge, while those charges associated with local service be identified by a separate standardized term.

32. Although we adopt the guideline that charges be identified through standard labels, carriers may nevertheless choose to include additional language further describing the charges. We are persuaded by the record not to adopt any particular ''safe-harbor'' language, as set forth in the Proposed Rules, or mandate specific disclosures. Rather, we believe carriers should have broad discretion in fashioning their additional descriptions, provided only that they are factually accurate and non-misleading. For example, for purposes of good customer relations, a carrier may wish to elaborate on the nature and origin of its universal service charge. A full, accurate and non-misleading description of the charge would be fully consistent with our guideline. In contrast, we would not consider a description of that charge as being ''mandated'' by the Commission or the Federal Government to be accurate. Instead, it is the carriers' business decision whether, how, and how much of such costs they choose to recover directly from consumers through separately identifiable charges. Accordingly, to state or imply that the carrier has no choice regarding whether or not such a charge must be included on the bill or the amount of the charge would be misleading.

33. In the Proposed Rules, we sought comment on whether it is a violation of section 201(b) for a carrier to bill customers for more than their *pro rata* share of universal service and access fees. We decline to adopt specific rules addressing these concerns. Some commenters assert that it may be impractical accurately to allocate some line-item charges to an individual customer on a per-bill basis. For example, a carrier's universal service contributions may depend on variables whose values are not known at the time the carrier issues a bill, such as the total revenue contribution base of all carriers and the high-cost and low-income projections for universal service support. At least one commenter argues that carriers should be allowed to account for uncollectibles, billing expenses, and administrative expenses in setting the amount of their line item assessments for universal service. Although we decline to adopt specific rules here, we caution that we will not hesitate to take action on a case-by-case basis under section 201(b) of the Act against carriers who impose unjust or unreasonable line-item charges.

34. We also decline suggestions to require carriers to provide a detailed breakdown of their costs and cost reductions on their customer bills. The purpose behind these proposals in the Proposed Rules was to enhance consumers' understanding of the costs of telecommunications services, thereby increasing their ability to determine whether such services are fairly priced. We agree, however, that long explanations of a carrier's cost calculations may add complexity to telephone bills, creating confusion that outweighs the benefits of providing such descriptions. For these reasons, we also decline to adopt specific language describing the distinction between primary and non-primary residential lines. We conclude that LECs may craft their own descriptions to convey the Commission's primary/non-primary definition to their customers, provided that the information is conveyed truthfully and accurately. We believe, however, that our purpose of enhancing consumers' understanding will be adequately met through the guidelines adopted herein.

35. We decline to specify any periodic notification to consumers providing additional explanation of any charges resulting from federal regulatory action. We believe our guideline requiring standard labels for such charges should, even without further non-misleading description, provide consumers with, at minimum, notice of these charges. In this regard, we point out that such line-item charges, like all other charges on the bill, are subject to our guideline requiring the prominent display of a toll-free number for consumer inquiries and disputes. We emphasize that carriers' customer service representatives must be prepared to explain fully the nature and purpose of these charges if asked to do so.

36. In balancing the legitimate interest of consumers and carriers, we reject suggestions that standardized labels would violate the First Amendment. We therefore disagree with ACTA's comment that the Commission cannot discourage use of other line-item labels ''as a matter of constitutional law,'' if such descriptions are accurate. We emphasize that we have not mandated or limited specific language that carriers utilize to describe the nature and purpose of these charges; each carrier may develop its own language to describe these charges in detail. Commercial speech that is misleading is not protected speech and may be prohibited. Furthermore, commercial speech that is only potentially misleading may be restricted if the restrictions directly advance a substantial governmental interest and are no more extensive than necessary to serve that interest. Finally, commercial speech that is neither actually nor potentially misleading may be regulated if the government satisfies a three-pronged test: first, the government must assert a substantial interest in support of its regulation; second, the government must demonstrate that the restriction on commercial speech directly and materially advances that interest; and third, the regulation must be ''narrowly drawn.'' We concluded that our requirement that carriers use standard terms to label charges resulting from federal regulatory action passes this three-prong test.

3. Clear and Conspicuous Disclosure of Inquiry Contacts

37. The final fundamental truth-in-billing principle we adopt is that consumers must have the necessary tools to challenge charges for unauthorized services. We conclude that carriers must prominently display on their monthly bill a toll-free number or numbers by which customers may inquire or dispute any change on that bill. This telephone number shall be provided in a clear and conspicuous manner, so that the customer can easily identify the appropriate number to use to inquire about each charge. We are cognizant, however, that the service

provider is not necessarily the most appropriate entity for consumers to call. A service provider may, for example, contract with the LEC or an independent billing aggregator to provide inquiry and dispute resolution services for charges billed through the local telephone bill. A carrier may list a toll-free number for a billing agent, clearinghouse, or other third party, provided that such party possesses sufficient information to answer questions concerning the customer's account and is fully authorized to resolve consumer complaints on the carrier's behalf. This will enable customers to avoid feeling that they are ''getting the run around.'' We decline to require carriers to provide a business address on each telephone bill for the receipt of consumer inquiries and complaints. As several commenters have noted, most customers call when they have questions—they do not write. Accordingly, the inclusion of a business address will not significantly enhance consumers' ability to contact the billing entity. We do require, however, that each carrier make its business address available upon request to consumers through its toll-free number, for those consumers who wish to follow up their complaint or inquiry in writing.

38. We conclude that conspicuous display of a toll-free inquiry and dispute resolution number is an essential linchpin to consumers' exercise of the rights we seek to protect in this Order, as well as in other proceedings such as our new slamming rules. Consumers often experience considerable difficulty in contacting the entity whose charges appear on the telephone bill. This results in delayed resolution of billing problems, often necessitating the intervention of other parties such as the LEC, the state public service commission, or the Commission. Requiring that each telephone bill include at a minimum a toll-free telephone number for the receipt of consumer inquiries and complaints will minimize customer confusion regarding charges on telephone bills and enable consumers to resolve their billing disputes easily and promptly.

39. We decline at this time to adopt standards for the provision of accurate information by carrier customer service representatives. We expect such personnel to be well-trained and that the number of employees is sufficient to handle call volumes, and we assume that competition will provide a strong incentive for each carrier to set appropriate standards on its own initiative. Although we decline to mandate any particular standards for customer service, we remind carriers that the intentional provision of untruthful or misleading information to a customer regarding the nature and purpose of charges or fees would constitute a violation of section 201(b) of the Act.

III. Procedural Matters

A. Final Regulatory Flexibility Analysis

40. As required by the Regulatory Flexibility Act (RFA), an Initial Regulatory Flexibility Analysis (IRFA) was incorporated in the Proposed Rules in Truth-in-Billing and Billing Format. The Commission sought written public comment on the proposals in the Proposed Rules, including comment on the IRFA. The comments received are discussed below. This present Final Regulatory Flexibility Analysis (FRFA) conforms to the RFA.

1. Need for and Objectives of this Order and the Rules Adopted Herein

41. Section 258 of the Act makes it unlawful for any telecommunications carrier ''to submit or execute a change in a subscriber's selection of a provider of telephone exchange service or telephone toll service except in accordance with such verification procedures as the Commission shall prescribe.'' Accordingly, the Commission adopts in this Order principles to ensure that consumers receive thorough, accurate, and understandable bills from their telecommunications carriers. First, consumer telephone bills must be clearly organized, clearly identify the service provider, and highlight any new providers; second, bills must contain full and non-misleading descriptions of charges that appear therein; and third, bills must contain clear and conspicuous disclosure of any information the consumer may need to make inquiries about, or contest charges, on the bill. Additionally, the Commission adopts minimal, basic guidelines that explicate carriers' obligations pursuant to these broad principles. These principles and guidelines are designed to prevent the types of consumer fraud and confusion evidenced in the tens of thousands of complaints that this Commission, and state commissions, receive each year. In enacting the principles and guidelines contained in this Order, our goal is to implement the provisions of sections 201(b) and 258 to prevent telecommunications fraud, as well as to encourage full and fair competition among telecommunications carriers in the marketplace.

2. Summary of the Significant Issues Raised by the Public Comments in Response to the IRFA

42. In the IRFA, we found that the rules we proposed to adopt in this proceeding may have a significant impact on a substantial number of small businesses as defined by 5 U.S.C. 601(3). The IRFA solicited comment on the number of small businesses that would be affected by the proposed rules and on alternatives to the proposed rules that would minimize the impact on small entities consistent with the objectives of this proceeding.

43. PCIA, Liberty, RTG and others argue that the cost of compliance faced by smaller carriers would be particularly burdensome. PCIA asserts that medium- and small-sized carriers will be less likely to have billing systems in place that ''can simply be 'tweaked' to produce the required modifications.'' Indeed, PCIA states that smaller carriers may be forced to replace their entire billing systems in order to comply with the format and content mandates of the proposed rules. RTG agrees, arguing that rural carriers are particularly sensitive to increased regulatory requirements with significant costs.

44. The Office of Management and Budget (OMB) received a large number of comments in response to the Proposed Rules. The commenters generally agree that new charges or services need to be easily identifiable on customer bills; that definitions of services and other terms are difficult to reach and could be counterproductive; that more information, including point of contact toll-free numbers for service providers or billing agents needs to be included in billing materials; that materials should be clear, concise, and relatively simple; that the Commission must account for costs of any changes to bills that will be passed on to consumers in making decisions; that CMRS and other wireless firms that provide services only to businesses should be exempt from most new requirements that would be imposed on wireline carriers; that every effort should be made so that billing standards are uniform across the nation; that reseller information should be included; and that, where possible, market-based solutions should be adopted unless there is conclusory evidence that the Commission must enact regulations that affect billing practices. As a result, OMB recommends that we not impose undue burdens on wireless providers and small wireline services, and urges that flexibility be given to small companies that may experience significant cost and

managerial issues related to implementation of billing requirements. Moreover, OMB recommends that the Commission allow companies sufficient time to address their necessary Year 2000-related modifications to their computer systems as well as modifying their billing systems to meet any new requirements. OMB also recommends that the Commission make a concerted effort to work with the industry to establish voluntary guidelines in lieu of mandatory requirements that restrict the ability of firms to tailor their billing to meet the needs of customers.

45. We have considered these comments and believe we appropriately balanced the concerns of carriers that detailed rules may increase their costs against our goal of protecting consumers against fraud. We have exempted CMRS carriers from certain of our requirements on ground that the requirements may be inapplicable or unnecessary in the CMRS context. Moreover, we consider our principles and guidelines to be flexible enough that carriers will be able to comply with them without incurring unnecessary expense.

3. Description and Estimates of the Number of Small Entities to Which the Rules Adopted in the Order in CC Docket No. 98–170 May Apply

46. The RFA directs agencies to provide a description of and, where feasible, an estimate of the number of small entities that may be affected by the adopted rules. The RFA generally defines the term ''small entity'' as having the same meaning as the terms ''small business,'' ''small organization,'' and ''small governmental jurisdiction.'' In addition, the term ''small business'' has the same meaning as the term ''small business concern'' under the Small Business Act. A small business concern is one which: (1) is independently owned and operated; (2) is not dominant in its field of operation; and (3) satisfies any additional criteria established by the Small Business Administration (SBA).

47. The most reliable source of information regarding the total numbers of certain common carrier and related providers nationwide, as well as the numbers of commercial wireless entities, appears to be data the Commission publishes annually in its *Telecommunications Industry Revenue* report, regarding the Telecommunications Relay Service (TRS). According to data in the most recent report, there are 3,459 interstate carriers. These carriers include, *inter alia*, local exchange carriers, wireline carriers and service providers, interexchange carriers, competitive access providers, operator service providers, pay telephone operators, providers of telephone toll service, providers of telephone exchange service, and resellers.

48. The SBA has defined establishments engaged in providing ''Radiotelephone Communications'' and ''Telephone Communications, Except Radiotelephone'' to be small businesses when they have no more than 1,500 employees. Below, we discuss the total estimated number of telephone companies falling within the two categories and the number of small businesses in each, and we then attempt to refine further those estimates to correspond with the categories of telephone companies that are commonly used under our rules.

49. Although some affected incumbent LECs may have 1,500 or fewer employees, we do not believe that such entities should be considered small entities within the meaning of the RFA because they are either dominant in their field of operations or are not independently owned and operated, and therefore by definition not ''small entities'' or ''small business concerns'' under the RFA. Accordingly, our use of the terms ''small entities'' and ''small businesses'' does not encompass small ILECs. Out of an abundance of caution, however, for regulatory flexibility analysis purposes, we will separately consider small ILECs within this analysis and use the term ''small ILECs'' to refer to any ILECs that arguably might be defined by the SBA as ''small business concerns.''

50. Total Number of Telephone Companies Affected. The U.S. Bureau of the Census (''Census Bureau'') reports that, at the end of 1992, there were 3,497 firms engaged in providing telephone services, as defined therein, for at least one year. This number contains a variety of different categories of carriers, including local exchange carriers, interexchange carriers, competitive access providers, cellular carriers, mobile service carriers, operator service providers, pay telephone operators, personal communications services providers, covered specialized mobile radio providers, and resellers. It seems certain that some of those 3,497 telephone service firms may not qualify as small entities or small ILECs because they are not ''independently owned and operated.'' For example, a PCS provider that is affiliated with an interexchange carrier having more than 1,500 employees would not meet the definition of a small business. It is reasonable to conclude that fewer than 3,497 telephone service firms are small entity telephone service firms or small ILECs that may be affected by our principles and guidelines.

51. Wireline Carriers and Service Providers. The SBA has developed a definition of small entities for telephone communications companies except radiotelephone (wireless) companies. The Census Bureau reports that there were 2,321 such telephone companies in operation for at least one year at the end of 1992. According to the SBA's definition, a small business telephone company other than a radiotelephone company is one employing no more than 1,500 persons. All but 26 of the 2,321 non-radiotelephone companies listed by the Census Bureau were reported to have fewer than 1,000 employees. Thus, even if all 26 of those companies had more than 1,500 employees, there would still be 2,295 non-radiotelephone companies that might qualify as small entities or small ILECs. We do not have data specifying the number of these carriers that are not independently owned and operated, and thus are unable at this time to estimate with greater precision the number of wireline carriers and service providers that would qualify as small business concerns under the SBA's definition. Consequently, we estimate that fewer than 2,295 small telephone communications companies other than radiotelephone companies are small entities or small ILECs that may be affected by our principles and guidelines.

52. Local Exchange Carriers. Neither the Commission nor the SBA has developed a definition for small providers of local exchange services (LECs). The closest applicable definition under the SBA rules is for telephone communications companies other than radiotelephone (wireless) companies. According to the most recent *Telecommunications Industry Revenue* data, 1,371 carriers reported that they were engaged in the provision of local exchange services. We do not have data specifying the number of these carriers that are either dominant in their field of operations, are not independently owned and operated, or have more than 1,500 employees, and thus are unable at this time to estimate with greater precision the number of LECs that would qualify as small business concerns under the SBA's definition. Consequently, we estimate that fewer than 1,371 providers of local exchange service are small entities or small ILECs that may be affected by our principles and guidelines.

53. Interexchange Carriers. Neither the Commission nor the SBA has developed a definition of small entities

specifically applicable to providers of interexchange services (IXCs). The closest applicable definition under the SBA rules is for telephone communications companies other than radiotelephone (wireless) companies. According to the most recent *Telecommunications Industry Revenue* data, 143 carriers reported that they were engaged in the provision of interexchange services. We do not have data specifying the number of these carriers that are not independently owned and operated or have more than 1,500 employees, and thus are unable at this time to estimate with greater precision the number of IXCs that would qualify as small business concerns under the SBA's definition. Consequently, we estimate that there are fewer than 143 small entity IXCs that may be affected by our principles and guidelines.

54. Competitive Access Providers. Neither the Commission nor the SBA has developed a definition of small entities specifically applicable to competitive access services providers (CAPs). The closest applicable definition under the SBA rules is for telephone communications companies other than except radiotelephone (wireless) companies. According to the most recent *Telecommunications Industry Revenue* data, 109 carriers reported that they were engaged in the provision of competitive access services. We do not have data specifying the number of these carriers that are not independently owned and operated, or have more than 1,500 employees, and thus are unable at this time to estimate with greater precision the number of CAPs that would qualify as small business concerns under the SBA's definition. Consequently, we estimate that there are fewer than 109 small entity CAPs that may be affected by our principles and guidelines.

55. Resellers (including debit card providers). Neither the Commission nor the SBA has developed a definition of small entities specifically applicable to resellers. The closest applicable SBA definition for a reseller is a telephone communications company other than radiotelephone (wireless) companies. According to the most recent *Telecommunications Industry Revenue* data, 339 reported that they were engaged in the resale of telephone service. We do not have data specifying the number of these carriers that are not independently owned and operated or have more than 1,500 employees, and thus are unable at this time to estimate with greater precision the number of resellers that would qualify as small business concerns under the SBA's definition. Consequently, we estimate that there are fewer than 339 small entity resellers that may be affected by our principles and guidelines.

56. Rural Radiotelephone Service. The Commission has not adopted a definition of small entity specific to the Rural Radiotelephone Service. A significant subset of the Rural Radiotelephone Service is the Basic Exchange Telephone Radio Systems (BETRS). We will use the SBA's definition applicable to radiotelephone companies, *i.e.*, an entity employing no more than 1,500 persons. There are approximately 1,000 licensees in the Rural Radiotelephone Service, and we estimate that almost all of them qualify as small entities under the SBA's definition.

57. International Services. The Commission has not developed a definition of small entities applicable to licensees in the international services. Therefore, the applicable definition of small entity is generally the definition under the SBA rules applicable to Communications Services, Not Elsewhere Classified (NEC). This definition provides that a small entity is expressed as one with $11.0 million or less in annual receipts. According to the Census Bureau, there were a total of 848 communications services providers, NEC, in operation in 1992, and a total of 775 had annual receipts of less than $9,999 million. The Census report does not provide more precise data.

58. Telex. Neither the Commission nor the SBA has developed a definition of small entities specifically applicable to telex. The most reliable source of information regarding the number of telegraph service providers of which we are aware is the data the Commission collects in connection with the *International Telecommunications Data.* According to our most recent data, 5 facilities based and 2 resale provider reported that they engaged in telex service. Consequently, we estimate that there are fewer than 7 telex providers that may be affected by our principles and guidelines.

59. Message Telephone Service. Neither the Commission nor the SBA has developed a definition of small entities specifically applicable to message telephone service. The most reliable source of information regarding the number of message telephone service providers of which we are aware is the data the Commission collects in connection with the *International Telecommunications Data.* According to our most recent data, 1,092 carriers reported that they engaged in message telephone service. Consequently, we estimate that there are fewer than 1,092 message telephone service providers that may be affected by our principles and guidelines.

60. Cellular Licensees. Neither the Commission nor the SBA has developed a definition of small entities applicable to cellular licensees. Therefore, the applicable definition of small entity is the definition under the SBA rules applicable to radiotelephone (wireless) companies. This provides that a small entity is a radiotelephone company employing no more than 1,500 persons. According to the Bureau of the Census, only twelve radiotelephone firms out of a total of 1,178 such firms which operated during 1992 had 1,000 or more employees. Therefore, even if all twelve of these firms were cellular telephone companies, nearly all cellular carriers were small businesses under the SBA's definition. In addition, we note that there are 1,758 cellular licenses; however, a cellular licensee may own several licenses. In addition, according to the most recent *Telecommunications Industry Revenue* data, 804 carriers reported that they were engaged in the provision of either cellular service or Personal Communications Service (PCS) services, which are placed together in the data. We do not have data specifying the number of these carriers that are not independently owned and operated or have more than 1,500 employees, and thus are unable at this time to estimate with greater precision the number of cellular service carriers that would qualify as small business concerns under the SBA's definition. Consequently, we estimate that there are fewer than 804 small cellular service carriers that may be affected by the final rules.

61. 220 Mhz Radio Services. Because the Commission has not yet defined a small business with respect to 220 MHz services, we will utilize the SBA definition applicable to radiotelephone companies, *i.e.*, an entity employing no more than 1,500 persons. With respect to 220 MHz services, the Commission has proposed a two-tiered definition of small business for purposes of auctions: (1) for Economic Area (EA) licensees, a firm with average annual gross revenues of not more than $6 million for the preceding three years and (2) for regional and nationwide licensees, a firm with average annual gross revenues of not more than $15 million for the preceding three years. Given that nearly all radiotelephone companies under the SBA definition employ no more than 1,500 employees (as noted *supra*), we will consider the approximately 1,500 incumbent licensees in this service as small businesses under the SBA definition.

62. Private and Common Carrier Paging. The Commission has proposed a two-tier definition of small businesses in the context of auctioning licenses in the Common Carrier Paging and exclusive Private Carrier Paging services. Under the proposal, a small business will be defined as either (1) an entity that, together with its affiliates and controlling principals, has average gross revenues for the three preceding years of not more than $3 million, or (2) an entity that, together with affiliates and controlling principals, has average gross revenues for the three preceding calendar years of not more than $15 million. Because the SBA has not yet approved this definition for paging services, we will utilize the SBA's definition applicable to radiotelephone companies, *i.e.*, an entity employing no more than 1,500 persons. At present, there are approximately 24,000 Private Paging licenses and 74,000 Common Carrier Paging licenses. According to the most recent *Telecommunications Industry Revenue* data, 172 carriers reported that they were engaged in the provision of either paging or ''other mobile'' services, which are placed together in the data. We do not have data specifying the number of these carriers that are not independently owned and operated or have more than 1,500 employees, and thus are unable at this time to estimate with greater precision the number of paging carriers that would qualify as small business concerns under the SBA's definition. Consequently, we estimate that there are fewer than 172 small paging carriers that may be affected by the final rules. We estimate that the majority of private and common carrier paging providers would qualify as small entities under the SBA definition.

63. Mobile Service Carriers. Neither the Commission nor the SBA has developed a definition of small entities specifically applicable to mobile service carriers, such as paging companies. As noted above in the section concerning paging service carriers, the closest applicable definition under the SBA rules is that for radiotelephone (wireless) companies, and the most recent *Telecommunications Industry Revenue* data shows that 172 carriers reported that they were engaged in the provision of either paging or ''other mobile'' services. Consequently, we estimate that there are fewer than 172 small mobile service carriers that may be affected by the final rules.

64. Broadband Personal Communications Service. The broadband PCS spectrum is divided into six frequency blocks designated A through F, and the Commission has held auctions for each block. The Commission defined ''small entity'' for Blocks C and F as an entity that has average gross revenues of less than $40 million in the three previous calendar years. For Block F, an additional classification for ''very small business'' was added and is defined as an entity that, together with their affiliates, has average gross revenues of not more than $15 million for the preceding three calendar years. These regulations defining ''small entity'' in the context of broadband PCS auctions have been approved by the SBA. No small businesses within the SBA-approved definition bid successfully for licenses in Blocks A and B. There were 90 winning bidders that qualified as small entities in the Block C auctions. A total of 93 small and very small business bidders won approximately 40% of the 1,479 licenses for Blocks D, E, and F. Based on this information, we conclude that the number of small broadband PCS licensees will include the 90 winning C Block bidders and the 93 qualifying bidders in the D, E, and F blocks, for a total of 183 small entity PCS providers as defined by the SBA and the Commission's auction rules.

65. Narrowband PCS. The Commission has auctioned nationwide and regional licenses for narrowband PCS. There are 11 nationwide and 30 regional licensees for narrowband PCS. The Commission does not have sufficient information to determine whether any of these licensees are small businesses within the SBA-approved definition for radiotelephone companies. At present, there have been no auctions held for the major trading area (MTA) and basic trading area (BTA) narrowband PCS licenses. The Commission anticipates a total of 561 MTA licenses and 2,958 BTA licenses will be awarded by auction. Such auctions have not yet been scheduled, however. Given that nearly all radiotelephone companies have no more than 1,500 employees and that no reliable estimate of the number of prospective MTA and BTA narrowband licensees can be made, we assume, for purposes of this IRFA, that all of the licenses will be awarded to small entities, as that term is defined by the SBA.

66. Specialized Mobile Radio (SMR). The Commission awards bidding credits in auctions for geographic area 800 MHz and 900 MHz SMR licenses to firms that had revenues of no more than $15 million in each of the three previous calendar years. In the context of 900 MHz SMR, this regulation defining ''small entity'' has been approved by the SBA; approval concerning 800 MHz SMR is being sought. We do not know how many firms provide 800 MHz or 900 MHz geographic area SMR service pursuant to extended implementation authorizations, nor how many of these providers have annual revenues of no more than $15 million. One firm has over $15 million in revenues. We assume, for purposes of this IRFA, that all of the remaining existing extended implementation authorizations are held by small entities, as that term is defined by the SBA.

67. The Commission has held auctions for geographic area licenses in the 900 MHz SMR band, and recently completed an auction for geographic area 800 MHz SMR licenses. There were 60 winning bidders who qualified as small entities in the 900 MHz auction. In the recently concluded 800 MHz SMR auction there were 524 licenses awarded to winning bidders, of which 38 were won by small or very small entities.

68. Cable Service Providers. The SBA has developed a definition of small entities for cable and other pay television services that includes all such companies generating no more than $11 million in revenue annually. This definition includes cable systems operators, closed circuit television services, direct broadcast satellite services, multipoint distribution systems, satellite master antenna systems, and subscription television services. According to the Census Bureau, there were 1,758 total cable and other pay television services and 1,423 had less than $11 million in revenue. We note that cable system operators are included in our analysis due to their ability to provide telephony.

4. Summary of Projected Reporting, Recordkeeping and Other Compliance Requirements

69. Our binding principles require that all telecommunications carriers, both wireline and wireless, ensure (1) that consumer telephone bills be clearly organized, clearly identify the service provider, and highlight any new providers; (2) that bills contain full and non-misleading descriptions of charges that appear therein; and (3) that bills contain clear and conspicuous disclosure of any information the consumer may need to make inquiries about, or contest charges, on the bill. In addition, carriers must comply with the Commission's rules found below under ''Rule Changes.''

5. Steps Taken To Minimize the Significant Economic Impact of This Order on Small Entities and Small Incumbent LECs, Including the Significant Alternatives Considered

70. In this Order, we decline to adopt many of the proposals made in the Proposed Rules that would be most costly for subject carriers to implement. For example, we decline to adopt our proposal to require carriers to indicate each new service ordered by a customer each month. We also decline to require that carriers provide a detailed breakdown of their costs incurred due to federal regulatory action, and instead permit carriers to use their discretion to describe the nature and purpose of these charges to their customers. We have adopted general principles rather than stringent rules governing the organization of, and information included in, customer bills. We also exempt CMRS carriers from certain of our requirements. By implementing principles through broad guidelines, we allow carriers considerable discretion to satisfy their obligation in a manner that best suits their needs and those of their customers, thus minimizing the economic impact on small carriers to the greatest possible extent. The principles adopted here are common-sense requirements that make good business sense, and we believe that many, if not most, subject carriers already conform to these requirements. Many carriers will therefore find that little or no change to their existing billing practices will be needed.

71. The Commission will send a copy of the Order, including this FRFA, in a report to be sent to Congress pursuant to the Small Business Regulatory Enforcement Fairness Act of 1996. In addition, the Commission will send a copy of the Order, including the FRFA, to the Chief Counsel for Advocacy of the Small Business Administration. A copy of the Order and FRFA (or summaries thereof) will also be published in the **Federal Register**.

B. Final Paperwork Reduction Act of 1995 Analysis

72. The decision herein has been analyzed with respect to the Paperwork Reduction Act of 1995, Pubic Law 104–13, and the Office of Management and Budget (OMB) has approved some of its requirements in OMB No. 3060–0854. Among its recommendations, OMB ''strongly encourage[d]'' us not to adopt an approach that imposes undue burden on wireless carriers, and ''urges flexibility be given to small companies that may experience significant cost'' as a result of our proposals. In this Order, we have exempted CMRS carriers from certain of the requirements we adopt to promote truth-in-billing. Moreover, we have established general principles and guidelines, rather than rigid formatting rules, which provide sufficient flexibility to small carriers to meet these requirements without incurring undue cost. Some of the proposals have been modified or added, however, and therefore some of the information collection requirements in this item are contingent upon approval by the OMB.

C. Further Information

73. For further information concerning this proceeding, contact David Konuch, Enforcement Division, Common Carrier Bureau at (202) 418–0199 (voice), (202) 418–0485 (TTY).

74. Alternate formats (computer diskette, large print, audio cassette and Braille) are available to persons with disabilities by contacting Martha Contee at (202) 418–0260 (voice), (202) 418–2555 (TTY), or at mcontee@fcc.gov. The First Report and Order and Further Notice of Proposed Rules can be downloaded in WP or ASCII text at: http//www.fcc.gov/dtf/.

V. Ordering Clauses

75. Accordingly, *it is ordered*, pursuant to sections 1, 4(i) and (j), 201–209, 254, 258, and 403 of the Communications Act, as amended, 47 U.S.C. 151, 154(i), 154(j), 201–209, 254, 258, and 403 that this First Report and Order *is hereby adopted*, effective 30 days after publication of a summary in the **Federal Register**. The collections of information contained within are contingent upon approval by the Office of Management and Budget.

76. *It is further ordered* that 47 CFR part 64, *is amended* as set forth in Rule Changes.

77. *It is further ordered* that, to the extent issues from CC Docket No. 97–181, *Defining Primary Lines*, are resolved here, we incorporate the relevant portions of the record in that docket.

78. *It is further ordered* that the Commission's Office of Public Affairs, Reference Operations Division, shall send a copy of this First Report and Order, including the Final Regulatory Flexibility Analysis, to the Chief Counsel for Advocacy of the Small Business Administration.

List of Subjects in 47 CFR Part 64

Communications common carriers, Consumer protection, Telecommunications.

Federal Communications Commission.

Magalie Roman Salas,

Secretary.

Rule Changes

For the reasons discussed in the preamble, the Federal Communications Commission amends 47 CFR part 64 as follows:

PART 64—[AMENDED]

1. The authority citation for Part 64 continues to read as follows:

Authority: 47 U.S.C. 10, 201, 218, 226, 228, 332, unless otherwise noted.

2. Section 64.2000 is added to read as follows:

§ 64.2000 Purpose and scope.

(a) The purpose of these rules is to reduce slamming and other telecommunications fraud by setting standards for bills for telecommunications service. These rules are also intended to aid customers in understanding their telecommunications bills, and to provide them with the tools they need to make informed choices in the market for telecommunications service.

(b) These rules shall apply to all telecommunications common carriers, except that §§ 64.2001(a)(2), 64.2001(b), and 64.2001(c) shall not apply to providers of Commercial Mobile Radio Service as defined in § 20.9 of this chapter, or to other providers of mobile service as defined in § 20.7 of this chapter, unless the Commission determines otherwise in a further rulemaking.

(c) *Preemptive effect of rules.* The requirements contained in this subpart are not intended to preempt the adoption or enforcement of consistent truth-in-billing requirements by the states.

3. Section 64.2001 is revised to read as follows:

§ 64.2001 Truth-in-Billing Requirements.

(a) *Bill organization.* Telephone bills shall be clearly organized, and must comply with the following requirements:

(1) The name of the service provider associated with each charge must be clearly identified on the telephone bill.

(2) Where charges for two or more carriers appear on the same telephone bill, the charges must be separated by service provider, and the telephone bill must provide clear and conspicuous notification of any change in service provider, including notification to the customer that a new provider has begun providing service.

(i) ''Clear and conspicuous notification'' means notice that would be apparent to a reasonable consumer.

(ii) ''New service provider'' is any provider that did not bill for services on the previous billing statement. The notification should describe the nature of the relationship with the customer, including a description of whether the new service provider is the presubscribed local exchange or interexchange carrier.

(b) *Descriptions of billed charges.* Charges contained on telephone bills must be accompanied by a brief, clear, non-misleading, plain language description of the service or services rendered. The description must be sufficiently clear in presentation and specific enough in content so that customers can accurately assess that the services for which they are billed correspond to those that they have requested and received, and that the costs assessed for those services conform to their understanding of the price charged.

(c) *''Deniable'' and ''Non-Deniable'' Charges.* Where a bill contains charges for basic local service, in addition to other charges, the bill must distinguish between charges for which non-payment will result in disconnection of basic, local service, and charges for which non-payment will not result in such disconnection. The carrier must explain this distinction to the customer, and must clearly and conspicuously identify on the bill those charges for which non-payment will not result in disconnection of basic, local service. Carriers may also elect to devise other methods of informing consumers on the bill that they may contest charges prior to payment.

(d) *Clear and Conspicuous Disclosure of Inquiry Contacts.* Telephone bills must contain clear and conspicuous disclosure of any information that the customer may need to make inquiries about, or contest charges, on the bill. Common carriers must prominently display on each bill a toll-free number or numbers by which customers may inquire or dispute any charge contained on the bill. A carrier may list a toll-free number for a billing agent, clearinghouse, or other third party, provided that such party possesses sufficient information to answer questions concerning the customer's account and is fully authorized to resolve consumer complaints on the carrier's behalf. Each carrier must make its business address available upon request to consumers through its toll-free number.

[FR Doc. 99–16223 Filed 6–24–99; 8:45 am]

BILLING CODE 6712–01–P

FEDERAL COMMUNICATIONS COMMISSION

47 CFR Part 64

[CC Docket 98–170; FCC 99–72]

Truth-in-Billing and Billing Format

AGENCY: Federal Communications Commission

ACTION: Proposed rule.

SUMMARY: This document seeks comment on whether several of its truth-in-billing requirements should apply to wireless carriers, and what uniform labels should be used to identify line-item charges resulting from federal regulatory action. This document derives from our order adopting truth-in-billing requirements, released jointly, establishing common-sense billing principles to ensure that consumers are provided with basic information they need to make informed choices among telecommunications services and providers.

DATES: Written comments by the public concerning the standardized labels for charges relating to federal regulatory action are due on or before July 9, 1999. Written comments by the public concerning the application of the truth-in-billing principles and guidelines to CMRS carriers are due on or before July 26, 1999. Reply comments concerning the standardized labels for charges relating to federal regulatory action are due July 16, 1999. Reply comments concerning the application of the truth-in-billing principles and guidelines to CMRS carriers are due on or before August 9, 1999. Written comments by the public on the proposed information collections are due July 26, 1999. Written comments must be submitted by the Office of Management and Budget (OMB) on the proposed information collections on or before August 24, 1999.

ADDRESSES: Office of the Secretary, Federal Communications Commission, 445 Twelfth Street, S.W., Washington, D.C. 20554, with a copy to David Konuch, Federal Communications Commission, Common Carrier Bureau, Enforcement Division, Formal Complaints and Investigations Branch, 445 Twelfth Street, S.W., Washington, D.C. 20554. Parties should also file one copy of any documents filed in this docket with the Commission's copy contractor, International Transcription Services, Inc., 445 Twelfth Street, S.W., Room CY-B400, Washington, D.C. 20554. Comments on the information collections contained herein should be submitted to Judy Boley, Federal Communications Commission, Room 1-C804, 445 12th Street, SW, Washington, DC 20554, or via the Internet to jboley@fcc.gov, and to Timothy Fain, OMB Desk Officer, 10236 NEOB, 725—17th Street, N.W., Washington, DC 20503 or via the Internet to tfain@omb.eop.gov.

FOR FURTHER INFORMATION CONTACT: David Konuch, Enforcement Division, Common Carrier Bureau. (202) 418–0960. For additional information concerning the information collections contained in this Further Notice of Proposed Rules contact Judy Boley at 202–418–0214, or via the Internet at jboley@fcc.gov.

SUPPLEMENTARY INFORMATION: This is a summary of the Commission's Further Notice of Proposed Rules in CC Docket No. 98–170, adopted on April 15, 1999 and released on May 11, 1999. The full text of the Further Notice of Proposed Rules, including the Commissioners' statements, is available for inspection and copying during normal business hours in the FCC Reference Center, 445 Twelfth Street, S.W., Room CY–257, Washington, D.C. The complete text of this decision may also be purchased from the Commission's duplicating contractor, International Transcription services, Inc., 445 Twelfth Street, S.W., Room CY-B400, Washington, D.C. 20554.

Paperwork Reduction Act

1. This Further Notice of Proposed Rules contains a proposed information collection. The Commission, as part of its continuing effort to reduce paperwork burdens, invites the general public and the Office of Management and Budget (OMB) to comment on the information collections contained in this Further Notice of Proposed Rules, as required by the Paperwork Reduction Act of 1995, Public Law 104–13. Public and agency comments are due at the same time as other comments on this Further Notice of Proposed Rules; OMB notification of action is due 60 days from date of publication of this Further Notice of Proposed Rules in the **Federal Register**. Comments should address: (a) Whether the proposed collection of information is necessary for the proper performance of the functions of the Commission, including whether the information shall have practical utility; (b) the accuracy of the Commission's burden estimates; (c) ways to enhance the quality, utility, and clarity of the information collected; and (d) ways to minimize the burden of the collection of information on the respondents, including the use of automated collection techniques or other forms of information technology.

OMB Approval Number: None

TITLE: Standard labels for Charges Associated with Federal Regulatory Requirements/CMRS Carriers' Truth-in-Billing Requirements.

FORM NO.: N/A.

TYPE OF REVIEW: New collection.

RESPONDENTS: Business or other for-profit.

NUMBER OF RESPONDENTS: 3,099.

Collection	Number of respondents	Hours per response	Total annual burden
Standard Labels for Charges Associated with Federal Regulatory Requirements	3099	.5	1549.5
CMRS Truth-in Billing Requirements	804	81	65,124

Total Annual Burden: 66,673.5.

Estimated costs per respondent: $0.

Needs and Uses: This information collection reflects two discrete aspects. First, the collection includes third party disclosure requirements associated with the Commission's requirement that telephone bills use standard industry-wide labels to describe any line-item charges associated with federal regulatory action. Uniform labelling will ensure that consumers are able to understand the nature of the charges and enable them to compare accurately the price of telecommunications services offered by competing carriers. The estimated time per response associated with standard labels is .5 hours.

This collection also reflects third party disclosure requirements that may be imposed on CMRS carriers if the Commission decides to end these carriers' exemption from certain Truth-in-Billing rules. The estimated time per response associated with the information collection requirements that might be extended to CMRS carriers is 81 hours.

Initial Regulatory Flexibility Analysis

As required by the RFA, the Commission has prepared this present

IRFA of the possible, significant, economic impact on small entities of the policies and rules proposed in this Further Notice of Proposed Rules. Written public comments are requested on this IRFA. Comments must be identified as responses to the IRFA and must be filed by the deadlines for comments on the Further Notice of Proposed Rules provided below in section IV(E). The Commission will send a copy of this Further Notice of Proposed Rules, including this IRFA, to the Chief Counsel for Advocacy of the Small Business Administration. In addition, the Further Notice of Proposed Rules and IRFA (or summaries thereof) will be published in the **Federal Register**.

2. *Need for, and Objectives of, the Proposed Rules.* This Further Notice of Proposed Rules seeks comment on a specific proposed rule concerning labelling of charges relating to federal regulatory action. In addition, the Further Notice of Proposed Rules seeks comment on whether certain of our truth-in-billing requirements should be applicable to CMRS carriers. The proposals made in this Further Notice of Proposed Rules are necessary to ensure that consumers receive clear and accurate telecommunications bills.

3. *Legal Basis.* The proposed action is authorized under sections 4(i) and 4(j), 201, 208, 254 and 303(r) of the Communications Act of 1934, as amended, 47 U.S.C. 151, 154(i), 154(j), 201, 208, 254, and 303(r).

4. *Description and Estimate of the Number of Small Entities to Which the Proposed Rules Will Apply.* For purposes of this Further Notice of Proposed Rules, the Regulatory Flexibility Act defines a ''small business'' to be the same as a ''small business concern'' under the Small Business Act (SBA), 15 U.S.C. 632, unless the Commission has developed one or more definitions that are appropriate to its activities. Under the SBA, ''small business concern'' is one that: (1) is independently owned and operated; (2) is not dominant in its field of operation; and (3) meets any additional criteria established by the SBA. In the FRFA pertaining to this action, we described in detail the small entities potentially subject to the rules adopted in this Order. These same entities possibly would be affected by the proposal made in this Further Notice of Proposed Rules. For purposes of this IRFA, therefore, we incorporate the list of potentially affected entities contained in section IV(A)(3).

5. *Description of Projected Reporting, Recordkeeping and Other Compliance Requirements.* We seek comment on a proposal designed to increase the accuracy and understandability of telephone bills to consumers. Comment is requested on a proposal to require uniform labels on line-item charges resulting from federal regulatory action.

6. *Federal Rules that may Duplicate, Overlap, or Conflict with the Proposed Rule.* None.

7. *Any significant alternatives minimizing impact on small entities and are consistent with stated objectives.* None.

Summary of Further Notice of Proposed Rules

I. Application of Rules to CMRS Carriers

8. As we indicated in the Order, we seek comment on whether the remaining truth-in-billing rules we adopt in the wireline context should apply to CMRS carriers. More specifically, we seek comment on whether such rules should be imposed on CMRS carriers in order to protect consumers. As we stated in the Order, we believe that all consumers expect and should receive bills that are fair, clear, and truthful. However, absent evidence that there is a problem with wireless bills, it might not be necessary to apply the remaining rules in the CMRS context. Commenters may wish to address the applicability of a section 10 forbearance analysis. Those commenters who wish to apply such an analysis should address the specific elements of the standard set forth in section 10. We also seek comment on the extent to which the presence of a competitive market is relevant to consumers' ability to protect themselves from the harms we address here.

9. We also note growing evidence that some consumers are substituting wireless for wireline service. To what extent does this phenomenon affect our application of our guidelines to wireless providers? We also seek comment more generally on the benefit that consumers would derive from application of certain of the guidelines relative to the burden that such application would impose on CMRS carriers. First, as we indicated in the Order, all consumers are entitled to fair, clear, and reasonable practices. We seek comment on how to implement this principle in the CMRS context. For instance, we seek comment on the current billing practices of CMRS providers, including the types and descriptions of charges CMRS providers include in their bills.

10. Second, we seek comment on whether identifying new service providers and ''deniable'' charges makes sense in the wireless context. For example, because CMRS carriers are excluded from equal access obligations, it appears that CMRS carriers will rarely if ever be required to indicate a new long distance service provider on the bill. Similarly, CMRS carriers indicate in their comments that, unlike the practice in connection with billing for wireline carriers that can give rise to cramming, CMRS carriers do not at this time include charges for services rendered by third party entities. We seek comment on these assertions. Do CMRS providers bill for any other service providers? If so, for what types of services and how pervasive are these billing practices? Likewise, CMRS carriers, as non-LECs, that do their own billing do not have to distinguish between ''deniable'' and ''nondeniable'' charges because non payment of charges on a CMRS bill would not result in termination of basic local wireline service. Therefore, our guideline to identify ''deniable'' charges may have no relevance, and add no benefit, to consumers' CMRS bills.

II. Standard Labels for Line-Item Charges

11. As discussed in section II(C)(2)(c), we adopt the guideline that carriers must use standardized labels to refer to certain charges relating to federal regulatory action. We seek comment, however, on the specific labels that carriers should adopt. We tentatively conclude that the following labels would be appropriate: ''Long Distance Access'' to identify charges related to interexchange carriers'' costs for access to the networks of local exchange carriers; ''Federal Universal Service'' to describe line items seeking to recover from customers carriers' universal service contributions; and ''Number Portability'' to describe charges relating to local number portability. We tentatively conclude that such labels will adequately identify the charges and provide consumers with a basis for comparison among carriers, while at the same time be sufficiently succinct such that most carriers will be able to use them without requiring that they modify the field lengths of their current billing systems. We seek comment on these tentative conclusions. In addition, we seek comment on alternative labels, or appropriate abbreviations for the labeling of these charges. For example, the Florida Commission suggests the terms ''Federal Long Distance Access Fee,'' ''FCC Long Distance Access Fee,'' or ''Interstate Long Distance Access Fee'' to identify access charges, and ''Federal Universal Service Fee,'' ''FCC Universal Service Fee,'' or ''Interstate Universal Service Fee'' for universal service related charges. Commenters

should explain the merit and basis for their proposed labels, including, for example whether their proposals were chosen or evaluated by consumer focus groups. Indeed, we believe that consumer groups, with input from industry, can contribute greatly to our consideration of the appropriate labels. Finally, we seek comment on how carriers should identify line items that combine two or all of these charges into a single charge. We encourage parties to attempt to reach consensus on the appropriate labels.

III. Procedural Matters

12. Interested parties may file comments concerning the standardized labels for charges relating to federal regulatory action no later than 14 days after publication of this Further Notice of Proposed Rules in the **Federal Register**. Parties shall file comments concerning application of the truth-in-billing principles and guidelines to CMRS carriers no later than 30 days after publication of the Further Notice of Proposed Rules in the **Federal Register**. Parties may file reply comments no later than 21 days after publication of the Further Notice of Proposed Rules in the **Federal Register** concerning charges relating to federal regulatory action, and no later than 45 days after **Federal Register** publication concerning the CMRS issues raised in the Further Notice of Proposed Rules. Comments will be limited to 15 pages, not including appendices. Comments may be filed using the Commission's Electronic Comment Filing System (ECFS) or by filing paper copies. *See Electronic Filing of Documents in Rulemaking Proceedings,* 63 FR 24,121 (1998).

13. Comments filed through the ECFS can be sent as an electronic file via the Internet to <http://www.fcc.gov/e-file/ecfs.html>. Generally, only one copy of an electronic submission must be filed. If multiple docket or rulemaking numbers appear in the caption of this proceeding, however, commenters must transmit one electronic copy of the comments to each docket or rulemaking number referenced in the caption. In completing the transmittal screen, commenters should include their full name, Postal Service mailing address, and the applicable docket or rulemaking number. Parties may also submit an electronic comment by Internet e-mail. To get filing instructions for e-mail comments, commenters should send an e-mail to ecfs@fcc.gov, and should include the following words in the body of the message, ''get form <your e-mail address.'' A sample form and directions will be sent in reply.

14. Parties who choose to file by paper must file an original and four copies of each filing. If more than one docket or rulemaking number appear in the caption of this proceeding, commenters must submit two additional copies for each additional docket or rulemaking number. All filings must be sent to the Commission's Secretary, Magalie Roman Salas, Office of the Secretary, Federal Communications Commission, The Portals, 445 Twelfth Street, S.W., Washington, D.C. 20554.

15. Parties who choose to file by paper should also submit their comments on diskette. These diskettes should be submitted to David Konuch of the Common Carrier Bureau's Enforcement Division, The Portals, 445 Twelfth Street, S.W., Washington, D.C. 20554. Such a submission should be on a 3.5 inch diskette formatted in an IBM compatible format using WordPerfect 5.1 for Windows or compatible software. Spreadsheets should be saved in an Excel 4.0 format. The diskette should be accompanied by a cover letter and should be submitted in ''read only'' mode. The diskette should be clearly labelled with the commenter's name, proceeding (including the docket number in this case [CC Docket No. 98–170]), date of submission, and the name of the electronic file on the diskette. The label should also include the following phrase ''Disk Copy—Not an Original.'' Each diskette should contain only one party's pleadings, preferably in a single electronic file. In addition, commenters must send diskette copies to the Commission's copy contractor, International Transcription Service, Inc., The Portals, Rm. CY–B400, 445 Twelfth Street, S.W., Washington, D.C. 20554.

16. For further information concerning this proceeding, contact David Konuch, Enforcement Division, Common Carrier Bureau at (202) 418–0199 (voice), (202) 418–0485 (TTY).

17. Alternate formats (computer diskette, large print, audio cassette and Braille) are available to persons with disabilities by contacting Martha Contee at (202) 418–0260 (voice), (202) 418–2555 (TTY), or at mcontee@fcc.gov. The First Report and Order and Further Notice of Proposed Rules can be downloaded in WP or ASCII text at: http//www.fcc.gov/dtf/.

IV. Ordering Clauses

18. Accordingly, *It is ordered,* pursuant to sections 1, 4(i) and (j), 201–209, 254, and 403 of the Communications Act, as amended, 47 U.S.C. §§ 151, 154(i), 154(j), 201–209, 254, and 403, that this Further Notice of Proposed Rules *Is hereby adopted* and comments *Are requested* as described above.

19. *It is further ordered* that the Commission's Office of Public Affairs, Reference Operations Division, *Shall send* a copy of this Further Notice of Proposed Rules, including the Initial Regulatory Flexibility Analysis, to the Chief Counsel for Advocacy of the Small Business Administration.

List of Subjects in 47 CFR Part 64

Communications common carriers, Consumer protection, Telecommunications.

Federal Communications Commission.

Magalie Roman Salas,

Secretary.

[FR Doc. 99–16224 Filed 6–24–99; 8:45 am]

BILLING CODE 6712–01–P

federal register

Friday
June 25, 1999

Part VI

Department of Justice

Office of Juvenile Justice and Delinquency Prevention

Training and Technical Assistance for the Life Skills Training Drug Prevention Program; Notice

DEPARTMENT OF JUSTICE

Office of Juvenile Justice and Delinquency Prevention

[OJP (OJJDP)–1237]

RIN 1121–ZB70

Training and Technical Assistance for the Life Skills Training Drug Prevention Program

AGENCY: Office of Justice Programs, Office of Juvenile Justice and Delinquency Prevention, Justice.

ACTION: Announcement of discretionary competitive technical assistance support.

SUMMARY: This program is authorized under the Omnibus Consolidated and Emergency Supplemental Appropriation Act of 1999, October 19, 1998 (Pub. L. 105–277). OJJDP invites applications from schools, local education agencies, local public health agencies, and public agencies or private organizations involved with drug prevention activities. Joint applications between schools or local education agencies and nonschool applicants are welcome.

DATES: Applications must be received by August 9, 1999.

ADDRESSES: Interested applicants can obtain an application kit from the Juvenile Justice Clearinghouse at 800–638–8736. The application kit is also available on OJJDP's Web site at www.ojjdp.ncjrs.org.

FOR FURTHER INFORMATION CONTACT: Eric Stansbury Program Manager, Office of Juvenile Justice and Delinquency Prevention, 202–307–5914. [This is not a toll-free number.]

SUPPLEMENTARY INFORMATION: This is a follow on to a previous OJJDP program announcement of the availability of training and technical assistance for the Life Skills Training drug prevention program, originally announced in the **Federal Register** on December 4, 1998, 63 FR 67136. Under this program announcement, additional OJJDP-funded training and technical assistance is being offered to 50 or more new program sites.

Purpose

The purpose of this program is to support the development and implementation of drug abuse prevention programs that help reduce risk factors and enhance protective factors among adolescents in middle and junior high school. The program will provide training and technical assistance to schools and/or local education agencies to implement the Life Skills Training drug prevention program. It will also provide the program support and implementation materials needed to implement and evaluate replication of this proven effective drug prevention program model that addresses a community's identified substance abuse reduction needs. The broad goal of the program is to reduce youth drug use by encouraging the promotion of multiple approaches to educating and motivating younger adolescents to make healthy lifestyle decisions.

Background

National survey data of adolescent drug use illustrate that the 1980's downward trend in the use of many drugs was reversed in 1993 (U.S. Department of Health and Human Services, 1997); increases in the prevalence of use among 8th, 10th, and 12th grade students were observed through 1996. In 1997, the data indicated a leveling off for some drug categories among some age groups, but in general, the trends for the mid-1990's show escalating rates of use for students in the three grades examined.

Age-related normative expectations for substance use generally place older children at greater risk for substance use initiation than younger children. Among preadolescent children, the use of illegal substances is relatively rare. The transition to middle school or junior high school is viewed as a major risk period for experimentation with gateway substances. The 1997 Monitoring the Future survey data indicate that by 8th grade, 47 percent of students had tried cigarettes at least once, 19 percent had smoked in the past month, and 9 percent were daily smokers (University of Michigan Institute for Social Research, 1997). For 10th grade students, these figures jump to 60 percent, 30 percent, and 18 percent, respectively, and for 12th grade students they jump to 65 percent, 35 percent, and 25 percent, respectively. Similarly, a large number of students reported having tried alcohol at least once during their lifetimes: 54 percent of 8th graders, 72 percent of 10th graders, and 82 percent of 12th graders admitted having used alcohol at least once, and 25 percent, 49 percent, and 64 percent, respectively, admitted having been drunk. Prevalence of marijuana use was lower than for tobacco and alcohol, but still high. Annual and 30-day use rates for those in 8th grade were 18 percent and 10 percent; in 10th grade, these rates were 35 percent and 20 percent; and in 12th grade, they were 39 percent and 24 percent.

Among youth who use drugs, a fairly predictable sequence has been observed, beginning with substances legal for adult consumption and then moving on to marijuana and eventually other illegal drugs (Kandel and Yamaguchi, 1999). This pattern of use is largely consistent with social attitudes and norms and the availability of drugs.

In fiscal year 1998, Congress appropriated $5 million to the Office of Juvenile Justice and Delinquency Prevention (OJJDP) ''to develop, demonstrate and test programs to increase the perception among children and youth that drug use is risky, harmful, and unattractive * * * [through an initiative that is] consistent with existing research findings on effective prevention methods against teenage drug abuse'' (Conference Report 105–405 for Pub. L. 105–119, November 13, 1997).

A number of theories, models, and frameworks have been tested to identify possible explanatory mechanisms of youth substance use initiation. The results of these tests also have created a basis for developing strategies for deterring initiation, use, and progression to abuse. Interventions based on these different theories, models, and frameworks may be more or less applicable to different target groups. Target audiences for drug abuse prevention interventions are grouped into three categories; different types of interventions are used for each. Universal interventions reach the general population (*e.g.*, all students in a school), selected programs target groups or subsets of the general population at risk (*e.g.*, children of drug users), and indicated interventions are designed for individuals who are already experimenting with drugs or who exhibit other related risks that foreshadow the use of drugs. The majority of interventions that have been developed and rigorously tested are of the universal type (National Institute on Drug Abuse, 1997).

Botvin, Schinke, and Orlandi (1995: 170–172) described common approaches to drug prevention:

> The most common prevention approach used by schools relies on teaching students factual information about drugs and drug abuse. Typically, students are taught about the dangers of tobacco, alcohol, or drug use in terms of the adverse health, social, and legal consequences. * * * Programs that rely exclusively on providing students with facts about drugs and drug abuse are conceptually based on a cognitive model of drug use/abuse. Such a model assumes that individuals make a more or less rational decision to use drugs or not to use drugs. * * * This model of drug abuse assumes that once armed with the necessary facts, students will make a rational and informed decision not to use drugs.

Another common approach to drug abuse prevention has been referred to as affective education. This prevention strategy [is] based on the belief that the risk of using drugs [can] be reduced through programs designed to promote affective development. * * * Instead of focusing on cognitive factors, affective education emphasizes the personal and social development of students. Affective education takes a somewhat broader approach to the problem of drug abuse than information dissemination by implicitly recognizing the role of psychosocial factors. * * * For example, components of affective education approaches that are used in some prevention programs include decisionmaking, effective communication, and assertiveness.

Subsequently developed approaches have been designed to target the psychosocial factors believed to promote the use of drugs. Emphasis was placed on teaching students the skills needed to resist influences such as those from peers and the media (Botvin, Schinke, and Orlandi, 1995).

Perhaps the theory most widely applied to the problem of substance use is the Social Learning Theory (Bandura, 1977). This theory posits that people learn behaviors through processes of modeling and reinforcement. A model derived from this theoretical perspective is the Social Influence Model. According to this model, youth's perceptions that deviant behaviors are standard practices among their peers promote deviance through the establishment of negative normative beliefs and reinforcement of behaviors that confirm those beliefs (Botvin et al., 1995). Thus, the onset of substance use can be viewed as behavior acquired through modeling, social pressure, and reinforcement by friends, family, the media, and community norms and practices. These same factors can be applied in a positive manner to change behavior.

Epidemiologic and etiologic studies have identified various factors that predict youth drug involvement (Bentler, 1992). A number of frameworks have been developed for classifying these factors into conceptual domains that may contribute to an understanding of how these factors cluster and operate'singly and together'for individuals and groups (for a review, see Hawkins, Catalano, and Miller, 1992). Perhaps the most commonly used framework is the ecological perspective, which groups factors into individual, family, peer group, community, and sociopolitical contextual domains (Bronfenbrenner and Ceci, 1994). Information about risks within these domains can then be used to focus prevention programming and strategies.

Recently, there has been a concentration on the identification of factors that may protect at-risk individuals and groups from the initiation of substance use and other problem behaviors such as violence (Cicchetti and Garmezy, 1993: Garmezy, 1993; Masten and Coatsworth, 1998; Werner, 1995). These protective or resiliency factors have been demonstrated to reduce the initiation of substance use under some circumstances. However, they appear to be less potent when there is an accumulation of risk factors in an individual's life or community (Hawkins, 1998). Moreover, risk and protective factors are not static; their potency and meaning change with a person's developmental status and circumstance (Glantz and Sloboda, in press). For example, epidemiologic studies have documented an association between changing beliefs about social responsibility and perceived risks of marijuana use on the prevalence of use among high school seniors (U.S. Department of Health and Human Services, 1997). That is, increases in social disapproval of use and an increased perception of risk associated with use were followed by a reduction in the prevalence of use from the mid-1980's to 1992. Perceived risk began to drop in 1992, and prevalence of use began to increase in 1993. Thus, it appears that a change in social norms can function as either a risk or a protective factor.

Despite these caveats, the use of risk and protective factors as a framework for the selection of community prevention programs has become widespread, and a number of studies have demonstrated the utility of the model for this purpose (Hawkins, 1998). In general, the more risk factors present in a community, the greater the likelihood that an individual will become involved with drug and alcohol use and other problem behaviors. Knowledge of the specific risk factors present in a community and among youth within that community provides policy makers, practitioners, and implementers with information critical for comprehensive, communitywide prevention planning.

The Center for the Study and Prevention of Violence (CSPV) at the University of Colorado, Boulder, has identified 10 prevention and intervention programs that meet the highest scientific standards of program effectiveness. CSPV has described these programs and provided the documentation necessary for their replication in a series of publications called *Blueprints*. The Life Skills Training (LST) program is an effective drug abuse program model documented in the *Blueprint* series. Developed by Dr. Gil Botvin, this program has empirically demonstrated, across settings, that it reduces gateway drug use among youth. Although this model has been tested in a number of jurisdictions, the training and technical assistance offered under this program announcement is designed to foster its replication in more and diverse jurisdictions, including urban, rural, and tribal settings. This whole school immersion drug prevention program targets middle and junior high school students with initial intervention in sixth or seventh grades, depending on school structure. For a more complete explanation of the LST program, see the appendix.

Goal

The specific goal of the training and technical assistance program is to reduce drug use among younger adolescents (middle and junior high school students) by increasing the perception among children and youth that drug use is risky, harmful, and unattractive.

Objectives

- To adapt, implement, and monitor the implementation of the Life Skills Training program.
- To reduce youth vulnerability to prodrug social influences.
- To decrease risk factors for drug use and associated behaviors by enhancing personal and social competencies and other protective factors among youth.

Program Strategy

Training and technical assistance for the replication of the LST model has been awarded to CSPV, which will, in turn, provide technical assistance to individual schools and local education agencies. CSPV will also assist in the selection of schools and local education agencies for the replication of the LST model and support the training, technical assistance, and process evaluation components of the program in each of the selected schools and local education agencies. In conjunction with CSPV, the LST training team, led by Dr. Botvin, will work with each selected site, providing training, technical assistance, and program and curriculum materials over a 3-year period.

The training and technical assistance will be provided by CSPV and the LST training team through a four-step process:

• Determine the suitability of applicant organizations (sites) to conduct the planned replication of LST (after being deemed qualified by an OJJDP review panel). CSPV and LST will determine suitability by reviewing applications, holding conference calls, and making site visits, where necessary.

• Facilitate the delivery of curriculum materials during the 3-year program to the selected sites, an essential step because the LST program requires strict adherence to a core curriculum.

• Provide technical assistance and training sessions during the course of the 3-year program.

• Monitor implementation at the local level and conduct a process evaluation to assess how well the program is being implemented and is serving the selected sites. (This step will be carried out by CSPV only.)

Evaluation

Evaluation of the program will consist of both a process evaluation and an outcome evaluation. In conjunction with its monitoring function, CSPV will conduct a process evaluation that will focus on the individual project's adherence to the model. CSPV will collect data through observing project functions, examining project documents, and interviewing staff to determine whether the program is reaching the target population and whether the program is being implemented as designed. Information regarding the findings of the process evaluation will be provided periodically to the projects for use in making project management decisions.

Also, in cooperation with OJJDP, the National Institute on Drug Abuse will conduct an outcome evaluation to assess the extent to which a large-scale replication program in schools and local education agencies with diverse characteristics is able to effectively implement the LST model across multiple sites and reduce substance abuse. To facilitate the evaluation, applicant schools and/or local education agencies, as appropriate, must agree to and/or arrange for the following conditions:

• Applicants must document the cooperation and assurance of the school or local education agency's administration to:

—Provide documentation of cooperation and assurance for sites for random assignment to either intervention or control schools (it is anticipated that up to 30 sites (grantees) will be randomly selected to participate in an outcome evaluation). Interviews with students receiving the LST program and their matched counterparts in the control schools (not receiving LST) will be conducted over a 5-year period in sites selected to participate in the outcome evaluation.

—Assist in obtaining informed consent from parents for their children's participation in the project (to include the administration of surveys) in the intervention (treatment) and nontreatment control schools.

—Cooperate with the administration of pretests, posttests, and annual follow-up school surveys through the students' high school years to assess the impact of the implementation over time. The surveys will be done in both the intervention schools and the nontreatment control schools.

• Applicants must agree to collaborate with the researchers in designing and administering surveys to assess risk and protective factors and potential mediators of program effectiveness such as school environment (school policies, school behavioral norms), drug use behaviors, perceptions of risk, and changes over time in skill development and/or other essential intervention components.

• Applicants must agree to allow researchers access to all process evaluation data, including those data that monitor the fidelity of implementation across sites, participation rates, and barriers to implementation.

• Over the course of the project, the researchers conducting the outcome evaluation will provide feedback to participating schools and agencies on the outcome evaluation, including interim and final reports.

Eligibility Requirements

OJJDP invites applications from schools, local education agencies, local public health agencies, and public and private drug prevention agencies. Joint applications between schools or local education agencies and nonschool applicants are welcome. If the applicant is not a school or local education agency, the application must include a memorandum of understanding that documents the local education agency's formal commitment to cooperate with the applicant, participate in all training, and provide all necessary data over the course of the project.

Selection Criteria

Because sites will not receive funding directly, but instead will receive training, curriculum materials, and technical assistance, OJJDP has modified its standard selection criteria.

Applicants will be reviewed to determine that they are qualified based on the following criteria:

• Applicants' assessment of the juvenile drug use problem in their communities, particularly whether specific problem areas coincide with the requirements of the LST model.

• Applicants' understanding of the program's specific goals and objectives.

• Applicants' ability to restate the objectives in measurable terms.

• The local structure established to implement the project.

Prior to the CSPV and LST team review process described above, applicants will be evaluated and rated by a review panel according to the criteria outlined below.

Problems To Be Addressed (15 points)

Applicants must describe the targeted school or local education agency and explain why it would be a suitable site for replication of the LST program. This description should include the number of schools and students that will participate in the LST program and must explain the community assessment process, including the procedures used, the types and sources of data, and the relationship of the data to the target population. Emphasis should be placed on establishing baseline data that describe community risk and protective factors and general characteristics of the population to be served. Applicants should also describe other drug prevention programs (e.g., efforts to reduce underage drinking and community-based coalitions designed to reduce substance abuse by youth) in the community and explain how this program will be coordinated with them.

Goals and Objectives (5 points)

Applicants must provide succinct statements demonstrating an understanding of the goals, objectives, and tasks associated with the project (see, for example, sections regarding evaluation and implementation design and also the appendix). Objectives must be quantifiable and measurable, and applicants must convey a clear understanding of the purpose, implementation, evaluation requirements, and expected results of the project.

Implementation Design (40 points)

The LST program is a school-based intervention designed to be implemented in the classroom.

Applicants must demonstrate that the LST program meets the drug prevention needs of the target population of students within the specific community. They must also provide a detailed description of the processes for planning and implementing the project

and for cooperating with the outcome evaluation grantee.

Because successful prevention programs change students, schools, neighborhoods, and families in ways that reduce drug use by youth, proposals must be based on local objective data that identify characteristics and risk factors that need to be addressed and protective factors that show potential. Data collected about populations other than the specific populations that will receive direct services under the program (for example, national or State data on youth drug use) are not considered sufficient evidence that the program responds to the community-level needs of the target population. Applicants should provide evidence that they will work with the LST training and technical assistance provider to make the program culturally relevant to the target community and its population.

Applicant schools and agencies also should consider that greater effectiveness is achieved when the core elements of the original research-based model are retained. Core elements are the basic structure, content, and delivery of the program. For example, the structure of the program includes the number of sessions during year 1 and booster sessions during years 2 and 3 required to achieve the desired effect; the content includes the critical components such as normative education, refusal skills, and social skills training; and delivery includes the provision of appropriate staff training and resources to assist in implementation.

Applicants must detail the number of schools and students within each school that will be involved in the replication effort during the 3-year period. LST is ideally meant to begin in sixth or seventh grade (middle or junior high school) with booster sessions in each of the following 2 years. However, in the 2 years following the initial implementation, two new sixth grade cohorts may begin implementing LST, so that eventually the entire school is implementing the program. Although applicants may submit proposals with any number of participating schools and students, OJJDP reserves the right to hold sites to a limited number of participating students. Applicants must identify an equal number of students in nontreatment school sites to serve as control groups. Documentation for each participating school of a commitment to implement the program or serve as a control school for the participating schools should be included. Because the evaluation may involve random assignment to treatment or control groups, schools must be willing to commit to participate in either group.

Management and Organizational Capability (35 points)

Applicants must demonstrate that their management structure and staffing are adequate for the successful implementation of the project. They must present a workplan that identifies responsible individuals, major tasks, and milestones (timeline) for implementing the LST model in their school(s), with training beginning in late summer or early fall 1999 and implementation beginning in spring 2000. Applicants should specifically describe coordination and collaboration efforts related to the project.

Applicants must demonstrate any existing programs or partnerships related to substance abuse prevention by submitting project descriptions or memorandums of understanding, interagency agreements, or other documentation. These materials may be attached as appendixes. However, the collaborative relationship must be clearly described in the application. Staff résumés or job descriptions should also be attached as an appendix.

Budget (5 points)

Training and technical assistance funds for the replication of the LST model will not be awarded to individual schools and local education agencies, but rather to CSPV, which will use the money to provide all materials, training, technical assistance, and a process evaluation. Thus, applicants are required to submit budgets detailing only the in-kind contributions they will make to ensure sufficient onsite coordination of and support for replication of the model. Examples of in-kind contributions include, but are not limited to, office space, an appropriate location for provider training and onsite technical assistance, personnel to serve as liaison with LST and CSPV and coordinate local site activities, and equipment that will be used to support the project.

Applicants must provide as an in-kind contribution a mechanism for coordinating onsite training and technical assistance such as providing a suitable location for provider training by LST staff. Applicants should describe this mechanism. For example, a school might designate one or more individuals as training and technical assistance coordinator(s). Applicants should list and total the value of those in-kind contributions required to implement this project and describe plans for institutionalizing the project. Applicants are advised that they must document the in-kind costs in accord with OMB Circular A–110 or A–102.

Format

The narrative portion of this application must not exceed 25 pages (excluding the budget narrative, forms, assurances, and appendixes) and must be submitted on 8½- by 11-inch paper, double-spaced on one side of the paper in a standard 12-point font. These standards are necessary to maintain a fair and uniform standard among all applicants. If the narrative does not conform to these standards, OJJDP will deem the application ineligible for consideration.

Project Period

Sites selected will be provided technical assistance, program implementation training, and LST curriculum materials over a 3-year project period.

Project Sites and Level of Support

Up to 50 projects will be selected to replicate the LST model locally over 3 years. Successful applicants will receive the training, curriculum materials, and technical assistance from CSPV and LST. In making final selections, the OJJDP Administrator will consider geographic distribution and balance in the number of each type of jurisdiction (urban, rural, and tribal) selected.

Catalog of Federal Domestic Assistance Number

For this program, the Catalog of Federal Domestic Assistance (CFDA) number, which is required on Standard Form 424, Application for Federal Assistance, is 16.729. This form is included in OJJDP's Application Kit, which can be obtained by calling the Juvenile Justice Clearinghouse at 800–638–8736 or sending an e-mail request to puborder@ncjrs.org. The kit also is available online at www.ojjdp.ncjrs.org.

Coordination of Federal Efforts

To encourage better coordination among Federal agencies in addressing State and local needs, the U.S. Department of Justice is requesting applicants to provide information on the following: (1) Active Federal grant award(s) supporting this or related efforts, including awards from the U.S. Department of Justice; (2) any pending application(s) for Federal funds for this or related efforts; and (3) plans for coordinating any funds described in items (1) or (2) with the funding sought by this application.

For each Federal award, applicants must include the program or project title, the Federal grantor agency, the

amount of the award, and a brief description of its purpose.

''Related efforts'' is defined for these purposes as one of the following:

- Efforts for the same purpose (i.e., the proposed award would supplement, expand, complement, or continue activities funded with other Federal grants).
- Another phase or component of the same program or project (e.g., to implement a planning effort funded by other Federal funds or to provide a substance abuse treatment or education component within a criminal justice project).
- Services of some kind (e.g., technical assistance, research, or evaluation) to the program or project described in the application.

Delivery Instructions

All application packages should be mailed or delivered to the Office of Juvenile Justice and Delinquency Prevention, c/o Juvenile Justice Resource Center, 2277 Research Boulevard, Mail Stop 2K, Rockville, Maryland 20850; 301–519–5535.

Note: In the lower left-hand corner of the envelope, the applicant must clearly write ''Training and Technical Assistance for the Life Skills Training Drug Prevention Program.''

Due Date

Applicants are responsible for ensuring that the original and five copies of the application package are received by 5 p.m. ET on August 9, 1999.

Contact

For further information, call Eric Stansbury, Program Manager, Special Emphasis Division, at 202–307–5914, or send an e-mail inquiry to stansbur@ojp.usdoj.gov.

References

Bandura, A. 1977. *Social Learning Theory*. Englewood Cliffs, NJ: Prentice Hall.

Bentler, P.M. 1992. Etiologies and consequences of adolescent drug use: Implications for prevention. *Journal of Addictive Diseases* 11(3):47–61.

Botvin, G.J., Baker, E., Dusenbury, L., and Botvin, E.M. 1995. Long-term follow-up results of a randomized drug abuse prevention trial in a white-middle-class population. *Journal of the American Medical Association* 273(14):1106–1112.

Botvin, G.J. 1995. Drug abuse prevention in school settings. In *Drug Abuse Prevention With MultiEthnic Youth,* edited by G.J. Botvin, S. Sckinke, and M. Orlandi. Thousand Oaks, CA: Sage Publications, Inc.

Bronfenbrenner, U., and Ceci, S.J. 1994. Nature-nurture reconceptualized in developmental perspective: A bioecological model. *Psychological Review* 101(4):568–586.

Center for the Study and Prevention of Violence. 1998. *Blueprints for Violence Prevention, Book 5: Life Skills Training.* Golden, CO: Center for the Study and Prevention of Violence.

Cicchetti, D., and Garmezy, N. 1993. Prospects and promises in the study of resiliency. *Development and Psychopathology* 5:497–502.

Garmezy, N. 1993. Children in poverty: Resiliency despite risk. *Psychiatry* 56:127–136.

Glantz, M., and Sloboda, Z. In press. Analysis and reconceptualization of resilience. In *Resilience and Development; Positive Life Adaptations,* edited by M. Glantz and J. Johnson. New York, NY: Plenum Press.

Hawkins, J.D. 1998 (June). Moving to phase five in the prevention cycle: Collaborating with communities to make prevention science prevention practice. Paper presented at the annual meeting of the Society for Prevention Research, Park City, UT.

Hawkins, J.D., Catalano, R.F., and Miller, J.Y. 1992. Risk and protective factors for alcohol and other drug problems in adolescence and early adulthood: Implications for substance abuse prevention. Psychological Bulletin 112(1):64–105.

Kandel, D.B., and Yamaguchi, K. 1999. Developmental stages of involvement in substance use. In *Sourcebook on Substance Abuse: Etiology, Epidemiology, Assessment, and Treatment,* edited by R.E. Tarter, R.J. Ammerman, and P.J. Ott. New York, NY: Allyn and Bacon.

Masten, A.S., and Coatsworth, J.D. 1998. Development of competence in favorable and unfavorable environments: Lessons from research on successful children. American Psychologist 53(2):205–220.

National Institute on Drug Abuse. 1997. *Preventing Drug Use Among Children and Adolescents: A Research-Based Guide.* NIH Publication No. 97–4212. Washington, DC: U.S. Department of Health and Human Services, National Institutes of Health, National Institute on Drug Abuse.

Pentz, M.A., Cormack, C., Flay, B., Hansen, W.B., and Johnson, C.A. 1986. Balancing program and research integrity in community drug abuse prevention: Project STAR approach. *Journal of School Health* 56(9):389–393.

Pentz, M.A., Dwyer, J.H., MacKinnon, D.P., Flay, B.R., Hansen, W.B., and Johnson, C.A. 1989. Primary prevention of chronic diseases in adolescence: Effects of the Midwestern Prevention Project on tobacco use. *American Journal of Epidemiology* 130(4):713–724.

Pentz, M.A., Trebow, E.A., Hansen, W.B., MacKinnon, D.P., Dwyer, J.H., Johnson, C.A., Flay, B.R., Daniels, S., and Cormack, C. 1990. Effects of program implementation on adolescent drug use behavior: The Midwestern Prevention Project (MPP). *Evaluation Review* 14:264–289.

University of Michigan Institute for Social Research. 1997 (December 18). Drug use among American teens shows some signs of leveling after a long rise. Press release. Ann Arbor, MI: University of Michigan Institute for Social Research.

U.S. Department of Health and Human Services. 1997 (December 20). Drug use survey shows mixed results for nation's youth: Use among younger adolescents appears to be slowing. Press release. Washington, DC: U.S. Department of Health and Human Services.

Werner, E.E. 1995. Resilience in development. *Current Directions in Psychological Science* 4(3):81–85.

Appendix

Applicants should contact The Center for the Study and Prevention of Violence, Institute of Behavioral Science, University of Colorado at Boulder, Campus Box 442, Boulder, Colorado 80309–0442; 303–492–8465, to obtain copies of the Life Skills Training Blueprint. The cost is $10.

Following is a brief description of the LST model, summarized from *Blueprints for Violence Prevention, Book 5: Life Skills Training.*

The Life Skills Training Program

The LST program is a primary prevention program that targets individuals who have not yet developed drug abuse problems. The goal of the program is to prevent gateway substance use among adolescents by making an impact on risk factors associated with tobacco, alcohol, and marijuana use, particularly occasional and experimental use. This goal is accomplished by providing adolescents with the knowledge and skills to:

- Resist peer and media pressure to smoke, drink, or use drugs.
- Develop a positive self-image.
- Make decisions and solve problems on their own.
- Manage anxiety.
- Communicate effectively and avoid misunderstandings.
- Build healthy relationships.
- Handle social situations with confidence.

The LST program is a school-based intervention designed to be implemented in the classroom. This intervention often is referred to as a universal intervention in that it is designed for all individuals in a given setting. The program was developed to have an impact on drug-related knowledge, attitudes, and norms; teach skills for resisting social influences to use drugs; and promote the development of general personal self-management skills and social skills. The LST prevention program comprises three major components. The first component is designed to teach students a set of general self-management skills. The second component focuses on teaching general social skills. The

third component includes information and skills that are specifically related to the problem of gateway substance use. The first two components are designed to enhance overall personal competence and decrease the motivation to use drugs and vulnerability to social influences. The problem-specific component is designed to provide students with material that relates directly to drug use (drug resistance skills, antidrug attitudes, and antidrug norms). Skills are taught using training techniques such as instruction, demonstration, feedback, reinforcement, and practice. In school districts that have a middle school structure, the program is implemented with sixth, seventh, and eighth graders. Where there is a junior high school structure, the program is implemented with seventh, eighth, and ninth graders.

The LST prevention program is a 3-year intervention designed to prevent or reduce gateway drug use. The program comprises 15 sessions in year 1, 10 booster sessions in year 2, and 5 booster sessions in year 3. The most natural and logical provider for a school-based prevention program is a regular classroom teacher. In addition to their availability, teachers are a logical choice because of their teaching experience and classroom management skills. Selection of program providers should be based on their interest, experience, enthusiasm, and commitment to drug abuse prevention; the extent to which they will be positive role models; and their willingness to attend the training workshop and implement the intervention carefully and completely according to the provider's guide.

The LST program provides project personnel 1- or 2-day initial training on the curriculum. This training is designed to familiarize intervention providers with the prevention program, its rationale, and the results of prior studies and to provide them with the opportunity to learn and practice the skills needed to successfully implement the program. Onsite and telephone technical assistance also are available to school personnel implementing the program in the respective project sites. In addition, LST provides booster training sessions during the second and third years.

There are two ways to implement LST in the classroom. The program can be scheduled so that it is taught at a rate of one class per week, or it can be programmed as a curriculum module or minicourse so that the entire program is conducted on consecutive class days. LST is a prescribed prevention program but has some implementation flexibility. It can be implemented in a number of different curriculum slots such as health education or drug education, if available, or through a major subject area such as science or social studies. Generally, it is implemented in a single subject area and taught by one teacher. However, some schools have implemented the program through more than one subject area where students are being taught by a team of teachers.

Individual or district-level school sites may implement the school-based program, which is designed to serve between 330 and 1,000 students in the school/district population who enter the program over a 3-year period in groups of equal size.

LST is based on an understanding of the causes of gateway substance use. LST interventions are designed to target the psychosocial factors associated with the onset of drug involvement. The initiation of drug use is the result of a complex combination of diverse factors; there is no single pathway or single variable that serves as a necessary and sufficient condition for initiating drug use. The LST approach to drug abuse prevention is based on an interactive model of drug abuse; drug abuse is thought of as resulting from a dynamic interaction of an individual and his or her environment. Social influences to use drugs (along with the availability of drugs) interact with individual vulnerability. Some individuals may be influenced to use drugs by the media (television and movies that glamorize drug use or suggest that drug use is normal or socially acceptable and advertising efforts that promote the sale of alcohol and tobacco products), family members who use drugs or convey prodrug attitudes, and friends or acquaintances who use drugs or hold attitudes and beliefs supportive of drug use. Others may be propelled toward drug use or a drug-using peer group because of intrapersonal factors such as low self-esteem, high anxiety, other negative feelings, or the desire for excitement.

The program focuses on drug-related expectancies (knowledge, attitudes, and norms), drug-related resistance skills, and general competence (personal self-management skills and social skills). Increasing prevention-related drug knowledge and resistance skills can provide adolescents with the information and skills needed to develop antidrug attitudes and norms and to resist peer and media pressure to use drugs. Teaching effective self-management and social skills (improving personal and social competence) can produce an impact on a set of psychological factors associated with decreased drug abuse risk (by reducing intrapersonal motivations to use drugs and by reducing vulnerability to prodrug social influences).

Examples of the types of personal and social skills typically included in this prevention approach are decisionmaking and problem-solving skills, cognitive skills for resisting interpersonal and media influences, goal setting and self-directed, behavior-change techniques, adaptive coping strategies for dealing with stress and anxiety, general social skills, and general assertiveness skills. This prevention approach teaches both these general skills and their application to situations related directly to tobacco, alcohol, or drug use. Building knowledge and skills in these areas can provide adolescents with the resources they need to resist peer and media pressures to use drugs and aid in developing a school climate in which drug use is not acceptable.

More than one-and-a-half decades of research with the LST program have consistently shown that it can cut drug use in half. These reductions (relative to controls) in both the prevalence (i.e., proportion of persons in a population who have reported some involvement in a particular offense) and incidence (i.e., the number of offenses that occur in a given population during a specified time interval) of drug use have been reported primarily in tobacco, alcohol, and marijuana use. These studies have demonstrated that this prevention approach can produce reductions in drug use that are long lasting and clinically meaningful. For example, long-term follow-up data indicate that reductions in drug use by seventh graders can last up to the end of high school. Evaluation research has demonstrated that this prevention approach is effective with a broad range of students including white middle-class youth and poor, inner-city minority (African-American and Hispanic) youth. Not only has this approach demonstrated reductions in alcohol and marijuana use of up to 80 percent, but evaluation studies have shown that LST also can reduce more serious forms of drug involvement such as the weekly use of multiple drugs or the prevalence of heavy smoking (a pack a day), heavy drinking, and episodes of drunkenness.

Dated: June 21, 1999.

Shay Bilchik,

Administrator, Office of Juvenile Justice and Delinquency Prevention.

[FR Doc. 99–16252 Filed 6–24–99; 8:45 am]

BILLING CODE 4410–18–P

Reader Aids

Federal Register

Vol. 64, No. 122

Friday, June 25, 1999

CUSTOMER SERVICE AND INFORMATION

Federal Register/Code of Federal Regulations

General Information, indexes and other finding aids	**202–523–5227**
Laws	**523–5227**
Presidential Documents	
Executive orders and proclamations	**523–5227**
The United States Government Manual	**523–5227**
Other Services	
Electronic and on-line services (voice)	**523–4534**
Privacy Act Compilation	**523–3187**
Public Laws Update Service (numbers, dates, etc.)	**523–6641**
TTY for the deaf-and-hard-of-hearing	**523–5229**

ELECTRONIC RESEARCH

World Wide Web

Full text of the daily Federal Register, CFR and other publications:

http://www.access.gpo.gov/nara

Federal Register information and research tools, including Public Inspection List, indexes, and links to GPO Access:

http://www.nara.gov/fedreg

E-mail

PENS (Public Law Electronic Notification Service) is an E-mail service that delivers information about recently enacted Public Laws. To subscribe, send E-mail to

listproc@lucky.fed.gov

with the text message:

subscribe publaws-l <firstname> <lastname>

Use listproc@lucky.fed.gov only to subscribe or unsubscribe to PENS. We cannot respond to specific inquiries at that address.

Reference questions. Send questions and comments about the Federal Register system to:

info@fedreg.nara.gov

The Federal Register staff cannot interpret specific documents or regulations.

FEDERAL REGISTER PAGES AND DATES, JUNE

29207–29536 1
29537–29776 2
29777–29944 3
29945–30212 4
30213–30378 7
30379–30860 8
30861–31104 9
31105–31484 10
31485–31686 11
31687–31962 14
31963–32178 15
32179–32386 16
32387–32794 17
32795–33004 18
33005–33174 21
33175–33366 22
33367–33738 23
33739–34108 24
34109–34510 25

CFR PARTS AFFECTED DURING JUNE

At the end of each month, the Office of the Federal Register publishes separately a List of CFR Sections Affected (LSA), which lists parts and sections affected by documents published since the revision date of each title.

3 CFR

Proclamations:
7103 (See Proc. 7202) 29773
7201 29769
7202 29773
7203 32379
7204 32381
7205 33737

Executive Orders:
12759 (revoked by EO 13123) 30851
12845 (revoked by EO 13123) 30851
12902 (revoked by EO 13123) 30851
13073 (amended by EO 13127).....32793
13123 30851
13124 31103
13125 31105
13126 32383
13127 32793

Administrative Orders:
Memorandums:
May 26, 1999.....29539
June 10, 1999.....32795
Presidential Determinations:
No. 99–25 of May 24, 1999 29537
No. 99–26 of June 3, 1999 31109
No. 99–27 of June 3, 1999 31111
No. 99–28 of June 3, 1999 31113
No. 99–29 of June 17, 1999 33739

5 CFR

213 31485
353 31485
532 33175
870 31485
890 31485
1620 31052
1650 31052
1651 31052
1690 31052
2430 30861

Proposed Rules:
177 33226
532 33427
630 31735
831 33429
841 33429

7 CFR

1 33367
2 32797
11 33367
37 30861
301 .....29207, 29541, 30213, 31963, 31964, 34109
407 30214
457 .....33378, 33379
923 33741
930 .....30229, 33005
947 34113
989 30233
1205 30236
1710 33176
1780 29945
1940 32370
2003 32387
3400 34102
3565 32370
3570 32387

Proposed Rules:
246 32308
301 30250
319 .....31512, 34141
916 30252
917 30252
920 34144
981 31153
1065 30256
1216 31736
1230 31158
1306 33027
1307 33027
1309 33027
1310 33027
1412 34154
1550 32156
1710 33228

8 CFR

103 33386
208 33386
214 .....29208, 30103, 32146, 33346
240 33386
246 33386
274a 33386
299 33386

Proposed Rules:
214 32149

9 CFR

91 29947
93 31966

Proposed Rules:
3 30257
92 34155
94 34155
98 34155
317 29702
318 29602
381 29602

10 CFR

2 .....29212, 29213
72 33178
170 31448

171 31448
1703 31115
Proposed Rules:
2 29246
50 31737
432 33431
850 29811

11 CFR

9034 32394
Proposed Rules:
110 31159

12 CFR

4 29214
331 30869
703 33184
707 33009
712 ....33184, 33187
902 30880
903 30880
Proposed Rules:
1 31749
5 31749
7 31749
24 31160
1750 ....31756, 32828

13 CFR

301 32974
Proposed Rules:
121 29813

14 CFR

14 32926
17 32926
39 ....29777, 29788, 29781, 29783, 30379, 30382, 31488, 31490, 31491, 31687, 31689, 31967, 32398, 32399, 32797, 33010, 33386, 33390, 33392, 33394, 33743, 33745, 33747
71 ....29785, 30241, 30888, 31115, 31116, 31117, 31118, 31119, 31120, 32179, 32401, 32402, 32924, 33010, 33011, 33012, 33013, 33014, 33188, 33189, 33190, 33191, 33192, 33193
95 30890
97 ....30892, 30895, 30896, 33397, 33399
121 32176
135 32176
401 29786
411 29786
413 29786
415 29786
417 29786
Proposed Rules:
11 33142
23 29247
25 32978
39 ....29602, 29607, 29814, 29965, 29966, 29969, 29972, 31518, 31520, 31523, 31687, 31689, 33229, 33232, 33435, 33437, 33439, 33441, 33443, 33445, 33447, 34168, 34170
71 ....29817, 30259, 30260, 30261, 30928, 31525, 31526, 31527, 32828, 33234
91 33142
108 31686
121 33142
135 33142
145 33142
417 34316
420 34316

15 CFR

774 30103
Proposed Rules:
922 ....30929, 31528

16 CFR

4 32179
23 33193
245 30898
305 32403
1700 32799
Proposed Rules:
23 30448

17 CFR

5 ....29217, 30384
10 30902
30 30103
240 ....29550, 31493, 32924
Proposed Rules:
1 32829
30 32829
240 29608

18 CFR

37 34117
385 31493
Proposed Rules:
35 31390
385 ....29614, 33034

19 CFR

Proposed Rules:
4 29975
159 29975
351 29818

20 CFR

404 ....29786, 33015
416 31969
422 33015

21 CFR

5 33194
74 32803
101 34125
172 29949
173 29224
175 29553
178 30386
520 ....30386, 31497, 32180
556 31497
900 32404
Proposed Rules:
1 32442
111 32830
884 31164
900 32443

22 CFR

Ch. VII 32805

23 CFR

180 29742
655 33751
Proposed Rules:
655 ....33802, 33806
668 30263

24 CFR

5 33754
203 29758
320 34106
968 33636
Proposed Rules:
Ch. IX 30450
245 32782
902 33348
960 33640
964 33644
990 30451

25 CFR

Proposed Rules:
20 34173
151 30929

26 CFR

1 ....29788, 32181, 33194
20 33194
25 33194
31 32408
Proposed Rules:
1 ....31770, 32205, 32305
25 33235
301 31529

27 CFR

Proposed Rules:
4 33448
178 33450
179 33450

28 CFR

92 ....32806, 33016
345 32168
540 32170
Proposed Rules:
543 32172

29 CFR

2509 33000
2704 31895
4044 31975
Proposed Rules:
1910 ....32447, 33810
2510 30452

30 CFR

Ch. II 30267
914 31691
938 30387
Proposed Rules:
917 29247
925 32449
943 29249

31 CFR

Proposed Rules:
10 31994

32 CFR

171 29227
706 31037
881 33400
Proposed Rules:
199 32451
884 29252

33 CFR

100 ....30388, 30389, 30390, 31977, 31978, 31979, 31980, 32409, 33402
110 29554
117 ....29558, 29559, 29561, 30390, 31981, 33403, 33404
160 33404
162 ....29554, 32103
165 ....29554, 29561, 30242, 30243, 31982, 31984, 32181, 32183, 32184, 32185, 33196, 34313
169 ....29229, 31037
Proposed Rules:
100 30273
155 31994
165 ....30274, 32209
167 32451

34 CFR

5b 31066
300 34048
Proposed Rules:
99 29532
602 34466
685 32358

36 CFR

Proposed Rules:
1190 31995
1191 31995
1228 30276

37 CFR

201 29518
202 ....29518, 29522
203 29518
204 29518
211 29518

38 CFR

Ch. I 30244
3 ....30244, 30391, 30392, 32807
4 ....30392, 32410
21 31693

39 CFR

111 31121
Proposed Rules:
265 30929

40 CFR

9 ....29490, 31358, 31693, 33550
52 ....29235, 29563, 29567, 29570, 29573, 29790, 29793, 29958, 30394, 30396, 30399, 31498, 32187, 32346, 32353, 32411, 32415, 32418, 32422, 32809, 32810, 33018, 33021, 33197, 33200, 33956, 34126
59 32103
62 ....29796, 29961, 32425, 32427, 32430
63 ....29420, 29490, 30194, 30406, 31358, 31695, 31895, 31898, 32610, 33202, 33550
69 34126
70 32433
80 30904
81 30911
82 ....29240, 30410
85 30415
90 34313
136 30417
180 ....29581, 29589, 31124, 31129, 31501, 31505, 32189, 33022
185 29589
186 29589

239 30434
244 32436
261 31986
272 34133
723 31987
745 31092
761 33755
Proposed Rules:
52 ....29255, 29615, 29616, 29821, 29976, 30276, 30453, 31168, 31529, 32352, 32355, 32457, 32458, 32464, 32831, 22962, 34173
62 ....29822, 29976, 32464, 32465
63 ....30453, 30456, 33453
68 34179
70 32465
80 ....30930, 32209
81 ....29822, 30937
82 31772
86 32209
141 30464
176 29823
180 ....30939, 31040
185 30939
186 30939
239 30465
261 31170
272 34180
300 ....32466, 32468, 33812, 34180
799 31074

41 CFR

101–35 32196
101–47 31731
301–11 32812

42 CFR

416 32198
Proposed Rules:
5 29831
51c 29831
412 31995
413 31995
483 31995
485 31995

43 CFR

Proposed Rules:
2800 32106
2880 32106
3100 29256
3110 29256
3120 29256
3130 29256
3140 29256
3150 29256
3160 29256
3170 29256
3180 29256

44 CFR

15 31136
65 32816
67 32817
Proposed Rules:
67 32831

46 CFR

8 30437
16 31989
31 30437
71 30437
91 30437
107 30437
502 33762
545 33762
551 30245
571 33762
Proposed Rules:
515 34183
520 34183
530 34183
535 34183

47 CFR

0 31139
22 33762
36 30917
51 ....29598, 32206, 34137
54 ....30440, 33785
64 34488
73 ....31140, 31141, 31142, 31143, 31511, 32441, 32821, 32822, 32823, 33224, 33225
76 ....29598, 33788
79 33425
90 33762
Proposed Rules:
1 30288
20 31530
22 30288
24 30288
26 30288
27 30288
36 ....30949, 31780
52 32471
54 ....31780, 33813
64 34499
69 31780
73 ....29977, 29978, 29979, 29980, 30288, 30289, 30290, 30291, 30292, 30293, 30294, 30295, 30296, 31171, 31172, 31173, 31174, 31175, 31176, 31532, 33237
74 30288
80 30288
87 30288
90 ....30288, 31532
95 30288
97 30288
101 30288

48 CFR

Ch. 1 ....32740, 32748, 32749
1 ....32741, 32748
4 32741
9 32748
11 32741
12 ....32742, 32748
13 32741
14 32741
15 32741
16 32746
19 ....32742, 32748
22 32748
31 32748
36 32746
37 32741
39 32747
42 32748
52 ....30103, 32741, 32742, 32748
53 32748
203 32305
207 31732
209 31732
803 30442
852 30442
1537 30443
1552 30442
Proposed Rules:
52 ....32738, 32742
212 33238
214 33239
215 33239
247 33238
252 33238
808 29981
812 29981
813 29981
852 29981
853 29981
1815 30468

49 CFR

1 29601
80 29742
261 29742
640 29742
Proposed Rules:
40 29831
71 33035
192 29834
195 29834
571 ....29616, 29617, 31533
1121 34185

50 CFR

13 32706
17 ....32706, 33796
20 ....29799, 32778
21 ....32766, 32778
23 31989
222 29805
223 29805
230 31037
285 ....29806, 30925, 31992,34138
600 31895
622 ....30445, 33800
635 ....29806, 30248, 31992, 34138
648 ....31144, 32824, 32825, 33425, 34139
660 ....29808, 31895, 33026
679 ....29809, 30926, 30927, 31151, 31733, 32207, 33426
Proposed Rules:
17 ....29983, 33816
20 ....32752, 32758
216 31806
223 ....33037, 33040
224 ....33037, 33040
226 29618
600 30956
622 ....29622, 31536, 33041
635 29984
648 ....29257, 30956, 32021
660 ....29834, 32210

REMINDERS

The items in this list were editorially compiled as an aid to Federal Register users. Inclusion or exclusion from this list has no legal significance.

RULES GOING INTO EFFECT JUNE 25, 1999

AGRICULTURE DEPARTMENT

Agricultural Marketing Service

Cherries (sweet) grown in—
- Washington; published 6-24-99

AGRICULTURE DEPARTMENT

Animal and Plant Health Inspection Service

Plant-related quarantine, domestic:
- Karnal bunt disease—
  - Compensation; published 6-25-99

AGRICULTURE DEPARTMENT

Farm Service Agency

Program regulations:
- Community Programs Guaranteed Loans Program; published 5-26-99

AGRICULTURE DEPARTMENT

Rural Business-Cooperative Service

Program regulations:
- Community Programs Guaranteed Loans Program; published 5-26-99

AGRICULTURE DEPARTMENT

Rural Housing Service

Program regulations:
- Community Programs Guaranteed Loans Program; published 5-26-99

AGRICULTURE DEPARTMENT

Rural Utilities Service

Program regulations:
- Community Programs Guaranteed Loans Program; published 5-26-99

COMMERCE DEPARTMENT

National Oceanic and Atmospheric Administration

Fishery conservation and management:
- Northeastern United States fisheries—
  - Atlantic mackerel, squid, and butterfish; published 6-25-99

ENVIRONMENTAL PROTECTION AGENCY

Air quality implementation plans; approval and promulgation; various States:
- California; published 6-25-99

Clean Air Act:
- Acid rain program—
  - Continuous emission monitoring; sulfur dioxide, nitrogen oxide, and carbon dioxide emissions monitoring and reporting provisions; published 5-26-99

INTERIOR DEPARTMENT

Fish and Wildlife Service

Endangered and threatened species:
- Howell's spectacular thelypody; published 5-26-99
- Ione buckwheat and manzanita; published 5-26-99

TRANSPORTATION DEPARTMENT

Federal Aviation Administration

Airworthiness directives:
- International Aero Engines AG; published 6-15-99

COMMENTS DUE NEXT WEEK

COMMERCE DEPARTMENT

National Oceanic and Atmospheric Administration

Fishery conservation and management:
- Alaska; fisheries of Exclusive Economic Zone—
  - Pacific halibut and red king crab; comments due by 6-28-99; published 6-3-99
- Northeastern United States fisheries—
  - Atlantic bluefish; comments due by 6-29-99; published 4-30-99

Ocean and coastal resource management:
- Marine sanctuaries—
  - Gulf of Farallones National Marine Sanctuary, CA; motorized personal watercraft operation; comments due by 7-1-99; published 6-9-99

DEFENSE DEPARTMENT

Acquisition regulations:
- Foreign military sales customer observation of negotiations; comments due by 6-28-99; published 4-28-99
- Uniform procurement instrument identification; comments due by 6-28-99; published 4-28-99

Privacy Act; implementation; comments due by 6-28-99; published 4-28-99

ENVIRONMENTAL PROTECTION AGENCY

Air programs:
- Accidental release prevention—
  - Flammable hydrocarbon fuel exemption; comments due by 6-28-99; published 5-28-99
- Fuels and fuel additives—
  - Diesel fuel quality control; comments due by 6-28-99; published 5-13-99
- Outer Continental Shelf regulations—
  - California; consistency update; comments due by 6-28-99; published 5-27-99

Air quality implementation plans; approval and promulgation; various States:
- Massachusetts and Rhode Island; comments due by 7-2-99; published 6-2-99
- Missouri; comments due by 6-28-99; published 5-28-99
- New Mexico; comments due by 7-1-99; published 6-1-99
- Rhode Island; comments due by 7-2-99; published 6-2-99

Hazardous waste:
- State underground storage tank program approvals—
  - Tennessee; comments due by 6-28-99; published 5-28-99

Pesticides; tolerances in food, animal feeds, and raw agricultural commodities:
- Bifenthrin; comments due by 6-28-99; published 4-28-99
- Sulfosate; comments due by 6-28-99; published 4-28-99

FEDERAL COMMUNICATIONS COMMISSION

Common carrier services, etc.:
- Agency competitive bidding authority; comments due by 7-2-99; published 5-3-99

Common carrier services:
- Federal-State Joint Board on Universal Service—
  - Access charge reform; comments due by 7-2-99; published 6-9-99
  - Non-rural local exchange carriers; high cost support; forward-looking mechanism; comments due by 7-2-99; published 6-14-99
  - Telecommunications service and Internet access (priority one services) appeals, etc.; support allocation method in event of insufficient funding; comments due by 6-30-99; published 6-24-99

Radio stations; table of assignments:
- Arizona; comments due by 6-28-99; published 5-17-99
- Colorado; comments due by 6-28-99; published 5-17-99
- Hawaii; comments due by 6-28-99; published 5-17-99
- Mississippi; comments due by 6-28-99; published 5-17-99
- Various States; comments due by 6-28-99; published 5-17-99

FEDERAL RESERVE SYSTEM

Extensions of credit to Federal Reserve banks (Regulation A):
- Century date change period (Y2K); special lending program to extend credit to eligible institutions to accommodate liquidity needs; comments due by 7-2-99; published 5-27-99

HEALTH AND HUMAN SERVICES DEPARTMENT

Food and Drug Administration

Food for human consumption:
- Food labeling—
  - Apple cider food safety control; workshop; comments due by 7-2-99; published 6-25-99

HEALTH AND HUMAN SERVICES DEPARTMENT

Health Care Financing Administration

Medicare program:
- Ambulatory surgical centers; ratesetting methodology update, payment rates, payment policies and covered procedures list; comments due by 6-30-99; published 3-12-99
- Hospital outpatient services prospective payment

system; comment period extension; comments due by 6-30-99; published 3-12-99
Women's Health and Cancer Rights Act of 1998; implementation:
Breast reconstruction and related services after mastectomy; coverage; comments due by 6-28-99; published 5-28-99

HOUSING AND URBAN DEVELOPMENT DEPARTMENT
Low income housing:
Housing assistance payments (Section 8)—
Admission and occupancy requirements; changes; comments due by 6-29-99; published 4-30-99
Homeownership program; comments due by 6-29-99; published 4-30-99
Mortgage and loan insurance programs:
Single family mortgage insurance—
Floodplain requirements applicable to new construction; clarification; comments due by 6-29-99; published 4-30-99

INTERIOR DEPARTMENT
Fish and Wildlife Service
Migratory bird hunting:
Seasons, limits, and shooting hours; establishment, etc.; comments due by 7-2-99; published 6-17-99

INTERIOR DEPARTMENT
Surface Mining Reclamation and Enforcement Office
Permanent program and abandoned mine land reclamation plan submissions:
Kentucky; comments due by 7-1-99; published 6-1-99
Texas; comments due by 7-1-99; published 6-1-99
West Virginia; comments due by 6-28-99; published 5-27-99

JUSTICE DEPARTMENT
Immigration and Naturalization Service
Immigration:
Documentary requirements: Nonimmigrants; waivers; admission of certain inadmissible aliens; parole; comments due by 6-29-99; published 4-30-99

LABOR DEPARTMENT
Pension and Welfare Benefits Administration
Women's Health and Cancer Rights Act of 1998; implementation:
Breast reconstruction and related services after mastectomy; coverage; comments due by 6-28-99; published 5-28-99

NATIONAL ARCHIVES AND RECORDS ADMINISTRATION
Records management:
Agency records centers; storage standard update; comments due by 6-29-99; published 4-30-99
Federal records storage; creation, maintenance, and disposition; comments due by 6-29-99; published 4-30-99

INTERIOR DEPARTMENT
National Indian Gaming Commission
Indian Gaming Regulatory Act:
Gaming facilities operated on Indian lands; construction and maintenance to protect environment and public health and safety; comments due by 6-28-99; published 4-27-99

NUCLEAR REGULATORY COMMISSION
Practice rules:
Domestic licensing proceedings—
Federally recognized Indian tribal governments; participation eligibility; comments due by 7-1-99; published 6-1-99
Federally recognized Indian tribal governments; participation eligibility; comments due by 7-1-99; published 6-1-99
Production and utilization facilities; domestic licensing:
Nuclear power plants—
Components; construction, inservice inspection, and inservice testing; industry codes and standards; comments due by 6-28-99; published 4-27-99
Radioactive wastes, high-level; disposal in geologic repositories:
Yucca Mountain, NV; comments due by 6-30-99; published 5-5-99

PENSION BENEFIT GUARANTY CORPORATION
Premium payments:
Self-correction of premium underpayments; comments due by 6-28-99; published 4-27-99

SECURITIES AND EXCHANGE COMMISSION
Practice and procedure:
Recordkeeping requirements for transfer agents; use of electronic media to produce and preserve records; comments due by 7-2-99; published 6-2-99
Securities:
Securities offerings, regulatory structure; modernization and clarification; comments due by 6-30-99; published 3-30-99

STATE DEPARTMENT
Consular services; fee schedule:
Changes; comments due by 6-28-99; published 5-28-99

TRANSPORTATION DEPARTMENT
Coast Guard
Boating safety:
Passenger Safety Act of 1998—
Uninspected passenger vessels safety; comments due by 6-30-99; published 4-1-99
Drawbridge operations:
Washington; comments due by 6-28-99; published 4-27-99

TRANSPORTATION DEPARTMENT
Federal Aviation Administration
Airworthiness directives:
Airbus; comments due by 7-2-99; published 6-2-99
Bell; comments due by 6-28-99; published 4-29-99
Boeing; comments due by 6-28-99; published 6-2-99
Eurocopter France; comments due by 6-28-99; published 4-28-99
Learjet; comments due by 7-1-99; published 5-17-99
McDonnell Douglas; comments due by 6-28-99; published 4-27-99
Airworthiness standards:
Soloy Corp. model pathfinder 21 airplane; comments due by 7-1-99; published 6-1-99
Special conditions—
Boeing model 767-300 airplanes; comments due by 6-28-99; published 5-13-99
Dormier model 328-300 airplanes; comments due by 6-28-99; published 5-13-99
Airwortiness standards:
Special conditions—
McDonnell Douglas Corp. model MD-17 series; comments due by 7-2-99; published 5-18-99
Class B and Class D airspace; comments due by 6-30-99; published 5-17-99
Class E airspace; comments due by 6-28-99; published 5-7-99

TRANSPORTATION DEPARTMENT
Federal Transit Administration
School bus operations: tripper service; definition; comments due by 7-2-99; published 5-3-99

TRANSPORTATION DEPARTMENT
Maritime Administration
U.S.-flag commercial vessels:
U.S.-flag vessels of 100 feet or greater; eligibility to obtain commercial fisheries documents; comments due by 7-1-99; published 5-6-99

TRANSPORTATION DEPARTMENT
Research and Special Programs Administration
Hazardous materials:
Hazardous materials transportation—
Registration and fee assessment program; comments due by 7-2-99; published 5-25-99
Pipeline safety:
Hazardous liquid transportation—
Gas and hazardous liquid pipelines; corrosion control; comments due by 6-30-99; published 4-7-99

TRANSPORTATION DEPARTMENT
Surface Transportation Board
Rail carriers:
Waybill data; confidentiality; comments due by 7-1-99; published 5-17-99

TREASURY DEPARTMENT
Customs Service
Customs brokers:
Licensing and conduct; comments due by 6-28-99; published 4-27-99

LIST OF PUBLIC LAWS

Note: No public bills which have become law were received by the Office of the Federal Register for inclusion in today's **List of Public Laws**.

Last List June 17, 1999

Public Laws Electronic Notification Service (PENS)

Note: Effective June 25, 1998 PENS new E-mail address is **listserv@www.gsa.gov**

PENS is a free electronic mail notification service of newly enacted public laws. To subscribe, send E-mail to **listserv@www.gsa.gov** with the text message:

subscribe PUBLAWS-L Your Name.

Note: This service is strictly for E-mail notification of new public laws. The text of laws is not available through this service. **PENS** cannot respond to specific inquiries sent to this address.