ARCHITECTURAL AND TRANSPORTATION BARRIERS COMPLIANCE BOARD

36 CFR Parts 1190 and 1191

[Docket No. 99–1]

RIN 3014–AA20

Americans with Disabilities Act (ADA) Accessibility Guidelines for Buildings and Facilities; Architectural Barriers Act (ABA) Accessibility Guidelines

AGENCY: Architectural and Transportation Barriers Compliance Board.

ACTION: Notice of Proposed Rulemaking.

SUMMARY: The Architectural and Transportation Barriers Compliance Board (Access Board) is proposing to revise and update its accessibility guidelines for buildings and facilities covered by the Americans with Disabilities Act of 1990 (ADA) and the Architectural Barriers Act of 1968 (ABA). These guidelines cover new construction and alterations and serve as the basis for enforceable standards issued by other Federal agencies. As a result of this revision and update, the guidelines for the ADA and ABA are consolidated in one Code of Federal Regulations part. The guidelines for the ABA also cover buildings and facilities leased by Federal agencies. The Department of Justice and the Department of Transportation are responsible for issuing standards based on the Access Board's guidelines under the ADA. ABA standards are issued by the Department of Defense, General Services Administration, the Department of Housing and Urban Development, and the U.S. Postal Service.

DATES: Comments should be received by March 15, 2000. The Access Board will hold two public hearings on the proposed guidelines. The dates, times, and locations of the public hearings will be published in a subsequent document in the **Federal Register**.

ADDRESSES: Comments should be sent to the Office of Technical and Information Services, Architectural and Transportation Barriers Compliance Board, 1331 F Street, NW., suite 1000, Washington, DC 20004–1111. Fax number (202) 272–5447. E-mail comments should be sent to docket@access-board.gov. Comments sent by e-mail will be considered only if they include the full name and address of the sender in the text. Comments will be available for inspection at the above address from 9:00 a.m. to 5:00 p.m. on regular business days.

FOR FURTHER INFORMATION CONTACT: Marsha Mazz (on the ADA Accessibility Guidelines) and Jim Pecht (on the ABA Accessibility Guidelines) Office of Technical and Information Services, Architectural and Transportation Barriers Compliance Board, 1331 F Street, NW., suite 1000, Washington, DC 20004–1111. Telephone numbers (202) 272–5434 extension 121 or extension 128 (voice); (202) 272–5449 (TTY). E-mail address: TA@access-board.gov. These are not toll free numbers.

SUPPLEMENTARY INFORMATION:

Availability of Copies and Electronic Access

This document is available on the Board's Internet site in HTML and PDF formats (http://www.access-board.gov/ada-aba/guidenprm.htm). Persons who want a copy in an alternate format (cassette tape, Braille, large print, or Ascii disk) may order one copy at no cost by calling the Architectural and Transportation Barriers Compliance Board's (Access Board) automated publications order line (202) 272–5434, by pressing 2 on the telephone keypad, then 1, and requesting publication S–36 (ADA and ABA Accessibility Guidelines Notice of Proposed Rulemaking). Persons using a TTY should call (202) 272–5449. Please record a name, address, telephone number and request publication S–36 and specify the type of format.

Statutory Background

The Americans with Disabilities Act of 1990 (ADA) (42 U.S.C. 12101 *et seq.*) recognizes and protects the civil rights of people with disabilities and is modeled after earlier landmark laws prohibiting discrimination on the basis of race and gender. The ADA requires that buildings and facilities be accessible to and usable by people with disabilities. The ADA establishes accessibility requirements for new construction and alterations of State and local government facilities under title II and places of public accommodation and commercial facilities under title III. The law requires that the Access Board issue minimum guidelines to assist the Department of Justice (DOJ) and the Department of Transportation (DOT) in establishing accessibility standards under titles II and III. These standards must be consistent with the Access Board's guidelines.

The Architectural Barriers Act of 1968 (ABA) (42 U.S.C. 4151 *et seq.*) requires that facilities designed, built, altered or leased with certain Federal funds be accessible to persons with disabilities. Similar to its responsibility under the ADA, the Access Board is charged with developing and maintaining minimum guidelines for accessible facilities that serve as the basis for enforceable standards issued by four standard-setting agencies. The standard-setting agencies are the Department of Defense (DOD), the General Services Administration (GSA), the Department of Housing and Urban Development (HUD), and the U.S. Postal Service (USPS).

Rulemaking History

On July 26, 1991, the Access Board published the Americans with Disabilities Act Accessibility Guidelines (ADAAG).[1] On the same day, the Department of Justice published its final regulations implementing title III of the ADA which incorporated ADAAG.[2] The Access Board amended ADAAG to include additional requirements specifically applicable to transportation facilities on September 6, 1991[3] which DOT incorporated into its final ADA regulations.[4] The Access Board modified ADAAG, and DOJ and DOT modified their standards on two occasions: to revise specifications for automatic teller machines (July 15, 1993) and to suspend requirements for detectable warnings at curb ramps, hazardous vehicular areas, and reflecting pools (April 12, 1994; July 29, 1996; November 23, 1998).[5]

The Access Board published amendments to ADAAG on January 13, 1998, that cover State and local government facilities and building elements designed for children's use.[6] The amendments for State and local government facilities add a section on judicial, legislative, and regulatory facilities which covers access to restricted and secured entrances, security systems, assembly seating, speakers' platforms, and to courtroom spaces. Another section covers detention and correctional facilities which provides scoping and technical requirements for accessible cells. In addition to these two new sections, ADAAG was amended to address elevators, entrances, TTYs, sales and service counters, and airport security systems in State and local government facilities. As originally published, ADAAG provided specifications based only on adult dimensions. The

[1] 56 FR 35408, 36 CFR Part 1191.
[2] 56 FR 35544, 28 CFR Part 36.
[3] 56 FR 45500.
[4] 56 FR 45584, 49 CFR Parts 37 and 38.
[5] 58 FR 38204, 59 FR 17442, and 63 FR 64836.
[6] 63 FR 2000 and 63 FR 2060.

amendments for building elements designed for children's use provide alternate specifications based on children's dimensions for drinking fountains, water closets, toilet stalls, lavatories and sinks, and built-in seating and tables. The technical requirements permit departures from existing ADAAG specifications for elements designed for use primarily by children instead of adults.

In 1994, the Board established an advisory committee to conduct a complete review of the guidelines and to recommend changes. The ADAAG Review Advisory Committee consisted of 22 members representing the design and construction industry, the building code community, State and local government entities, and people with disabilities.[7] The committee was charged with reviewing ADAAG in its entirety and making recommendations to the Board on:

- improving the format and usability of ADAAG;
- reconciling differences between ADAAG and national consensus standards, including model codes and industry standards;
- updating ADAAG to reflect technological developments and to continue to meet the needs of persons with disabilities; and
- coordinating future ADAAG revisions with national standards and model code organizations.

The advisory committee organized itself into subcommittees and met extensively over a two year period. Non-members were invited to participate in subcommittee meetings. The advisory committee followed a consensus-based process for the adoption of recommended changes to ADAAG which included a process for the submission of dissenting opinions. The advisory committee's work culminated in publication of a final report, ''Recommendations for a New ADAAG'' (September, 1996), which is available from the Board. Vice President Albert Gore recognized the work of the advisory committee and its constructive relationship with the Board and presented both entities with his ''Hammer Award'' which recognizes exemplary reinvention of the Federal government. The award commended the manner in which a variety of public and private sector interests were brought together to update the guidelines. The advisory committee's report recommends changes to both the format and substance of ADAAG.

The Board developed minimum guidelines for federally funded facilities covered by the ABA in 1982 that served as the basis for the Uniform Federal Accessibility Standards (UFAS). To further the goal of uniform standards, the Board is proposing to update these minimum guidelines based on the revisions to ADAAG. This will establish consistency between both guidelines so that the public and private sectors are held to a similar level of accessibility. This will facilitate compliance where a facility is subject to both the ADA and the ABA, such as a State or local government facility built with Federal money.

The Board's minimum guidelines do not directly impact the public. Instead they provide a minimum baseline for other Federal departments responsible for issuing enforceable standards. Each Federal department responsible for issuing and maintaining standards based on the Board's guidelines under the ADA or the ABA is represented on the Board. Representatives of these departments serve as Board members and staff liaisons and have been closely involved in the development of this proposed rule. Through this process, the Board and the standard-setting agencies coordinated extensively to seek consensus to minimize any differences between the Board's guidelines and their eventual standards.

General Issues

The ADAAG Review Advisory Committee recommended significant changes to the format and style of ADAAG. In fact, their recommendations completely reorganize much of ADAAG. The changes were recommended to provide a guideline that is organized and written in a manner that can be more readily understood, interpreted and applied. The recommended changes would also make the arrangement and format of ADAAG more consistent with model building codes and industry standards. This will make it easier for designers of the many facilities that will be required to comply both with the ADAAG and the locally adopted codes to understand how to comply with both sets of provisions. Changes include:

- removal of text language that is non-mandatory in nature for inclusion as advisory information nearby the text it comments on;
- inclusion in written text of requirements otherwise provided only in figures;
- clearer delineation between scoping requirements, which indicate what has to be accessible, from technical requirements, which specify how access is to be achieved;
- organizing technical sections into chapters according to the type of element or space;
- streamlining the guidelines by integrating special occupancy chapters (except for transportation facilities) into the main body of the document;
- revising the substance of scoping and technical provisions to better meet the needs of people with disabilities, to recognize technological developments, and to reconcile differences from national consensus standards; and
- utilizing a decimal-based, numeric-only numbering system, consistent with that used by the model codes and utilizing, to the extent possible, identical chapter and section numbers as ICC/ANSI A117.1 for the comparable subject matter.

Some changes are recommended in order to make the provisions in ADAAG more technically consistent with model building codes and industry standards. The advisory committee coordinated closely with the American National Standards Institute (ANSI) A117 Committee, which was in the process of updating its standard. This is a national consensus standard that provides technical requirements for accessible buildings and facilities. The Council of American Building Officials (CABO) was represented on the advisory committee. CABO, which functions as a coordinating body among model code organizations, serves as the Secretariat for the A117 Committee. CABO has been incorporated into the International Codes Council (ICC). While ADAAG requirements derive in large part from an earlier version of the ANSI standard, there are considerable differences between them. Both the advisory committee and the ANSI committee sought to reconcile these differences to harmonize the revised ADAAG with the ICC/ANSI A117.1–1998 standard.

The Board reviewed all recommendations from the advisory committee and has adopted most of them with some changes of its own. In addition, the Board has developed new figures to illustrate various provisions and provided new advisory notes that

[7] The American Council of the Blind, the American Institute of Architects, the Arc, Builders Hardware Manufacturers Association, Building Officials and Code Administrators International, Building Owners and Managers Association International, Council of American Building Officials, Disability Rights Education and Defense Fund, Eastern Paralyzed Veterans Association, International Conference of Building Officials, International Facility Management Association, Maryland Association of the Deaf, National Conference of States on Building Codes and Standards, National Easter Seal Society, National Fire Protection Association, National Institute of Building Sciences, Regional Disability and Business Technical Assistance Centers, Southern Building Code Congress International, Texas Department of Licensing and Regulation, Virginia Building and Code Officials Association, and the World Institute on Disability.

provide information currently contained in the appendix to ADAAG. In removing non-mandatory information from the text of the guidelines, the advisory committee made various recommendations on information that should be included in advisory notes. The Board has taken these recommendations into account in developing advisory notes for this proposed rule.

The application and scoping requirements (Chapters 1 and 2) for facilities covered by the ADA have been used as the basis for updating application and scoping requirements for facilities subject to the ABA. The technical requirements of this rule, as revised according to the advisory committee recommendations, are referenced by both scoping documents.

In addition, the Board has included scoping and technical requirements for accessible residential facilities. These requirements are based on updated provisions for residential facilities contained in the ICC/ANSI A117.1–1998 standard. These requirements represent an addition to ADAAG, which currently does not address such facilities. Also, they will serve to update requirements for dwelling units in the minimum guidelines for federally funded facilities upon which UFAS is based.

Section-by-Section Analysis

The following discussion covers the three parts of this rule. Part I covers the application and scoping requirements for facilities covered by the ADA (Chapters 1 and 2). This section of the analysis explains substantive differences between the revised guidelines and the current ADAAG. All changes proposed are based on recommendations from the advisory committee unless otherwise noted. Part II addresses the application and scoping requirements for facilities covered by the ABA. This section explains changes from the scoping and application requirements of Part I that are specific to federally funded facilities. Part III discusses the technical requirements (Chapters 3 through 11) that are referenced by both ADA and ABA scoping documents. These requirements are based on recommendations from the advisory committee. As in Part I, the discussion in Part III explains substantive differences between the current ADAAG and the revised guidelines. The Board has posed a number of questions in this section. The Board includes questions in the preamble usually because it wants to solicit additional information about an item before considering a specific requirement.

Part I: ADA Application and Scoping

Chapter 1: Application and Administration

This chapter states general principles that recognize the purpose of the guidelines (101), provisions for adults and children (102), equivalent facilitation (103), conventions (104), referenced standards (105), and definitions (106). Chapter 1 simplifies and reorganizes similar provisions contained in ADAAG sections 1, 2, and 3.

The Board has removed the term ''fixed'' in the revised guidelines for editorial purposes of clarity and consistency. The term is used in the current ADAAG to describe some elements, such as tables and storage, but not other types of covered elements. The Board understands that DOJ will clarify the application of the guidelines to fixed elements in its rulemaking to update its standards for consistency with the revised guidelines.

104 Conventions

Section 104.1 notes that all dimensions not stated as a ''maximum'' or ''minimum'' are absolute. All dimensions, including absolute dimensions, are ''subject to conventional industry tolerances.'' This corresponds with provisions in ADAAG 3.1 and 3.2 for graphic conventions and dimensional tolerances except for one change. ADAAG 3.2 recognizes conventional building industry tolerances ''for field conditions.'' The reference to ''field conditions'' has been removed to accommodate a wider variety of unavoidable tolerances other than those that occur on a construction site, namely manufacturing processes that are not true ''field'' situations. For example, acrylic molded plumbing fixtures, such as shower stalls, often have a slight draft or taper so that they can be drawn from their molds; this slight taper does not adversely affect accessibility and is a necessary consequence of this particular manufacturing process. ''Conventional industry tolerances'' is intended to refer to tolerances in construction and manufacturing, but not design.

The Board has clarified the calculation of percentages in section 104.2. This provision states that one is to round up to the next whole number when calculating ratios or percentages in determining the minimum number of required accessible elements or facilities. Where the required size or dimension of an element or facilities involves ratios or percentages, rounding down for values less than one half is permitted.

105 Referenced Standards

Section 105 lists the industry standards referenced in the guidelines. It also clarifies that where there is a difference between a provision of the guidelines and the referenced standards, the provision of the guidelines shall apply.

106 Definitions

Various defined terms and definitions have been revised, removed or added. The following definitions have been removed because they contain information more appropriately covered in technical requirements or are not considered necessary due to other text changes: ''access aisle,'' ''accessible element,'' ''accessible space,'' ''adaptability,'' ''clear,'' ''clear floor space,'' ''multi-family dwelling,'' and ''site improvement.'' Several definitions have been simplified by removing information contained in scoping or technical requirements or have been revised for consistency with model code definitions. These include: ''accessible route,'' ''automatic door,'' ''area of rescue assistance,'' ''controls and operating mechanisms'' (which have been changed to ''area of refuge'' and ''operable parts,'' respectively), ''dwelling unit,'' ''facility,'' ''means of egress,'' ''occupiable,'' ''sign,'' ''story,'' and ''transient lodging.'' Defined terms added to this section include: ''characters,'' ''children's use,'' ''destination-oriented elevator,'' ''employee work areas,'' ''mail boxes,'' ''pictogram,'' ''project,'' ''public entrance,'' ''qualified historic building or facility,'' ''self-service storage facility,'' ''technically infeasible,'' ''wheelchair,'' and ''wheelchair space.''

Chapter 2: Scoping Requirements

This chapter provides scoping requirements for spaces and elements required to be accessible in new construction and alterations. Chapter 2 replaces the minimum requirements sections of ADAAG 4.1. As revised, this section of the guidelines differs from ADAAG in that it integrates the scoping for exterior sites and interior facilities. ADAAG addresses scoping for exterior sites and interior facilities in separate subsections (4.1.2 and 4.1.3, respectively). ADAAG also currently has some scoping provisions intermingled with various technical provisions outside of 4.1. All scoping provisions are now located in Chapter 2.

201 Application

This section contains provisions for the general scope of the guidelines and is substantively consistent with

application provisions in ADAAG 4.1.1(1), (2), and (4).

202 Existing Buildings and Facilities

This section provides for the application of the guidelines to additions and alterations. Section 202.2 (Additions) clarifies the intent in ADAAG 4.1.5 that each addition meet the requirements of the guidelines for new construction and also refers to requirements for additions that affect or could affect areas containing a primary function.

Section 202.3 contains general scoping requirements for alterations, which are currently addressed in ADAAG 4.1.6(1). Alterations scoping provisions and technical provisions specific to certain elements and spaces in ADAAG 4.1.6(1) and 4.1.6(3) are not included in this general application section. Instead these provisions have been relocated to the relevant scoping or technical provisions for the element or space. Many of these provisions in ADAAG provide alternate specifications where ''technical infeasibility'' is encountered. However, these specifications present a false ''cap'' to the degree of departure since compliance is actually required to the degree it is technically feasible which may be above or below the level of access recognized in the specification. Consequently, in the revised guidelines, alternate criteria that have been retained have been made applicable to alterations generally and are not limited to instances of technical infeasibility.

As revised, the guidelines do not contain the provision currently in ADAAG 4.1.6(1)(c) which requires an entire space to be accessible when alterations of single elements, considered together, amount to an alteration of a room or space. The advisory committee considered this provision vague and difficult to enforce since it does not indicate the precise number of altered single elements that would trigger full compliance for a room or space. In view of the basic scoping requirements for alterations, the Board agrees this provision can be removed without affecting accessibility.

Section 202.4 addresses requirements for alterations affecting primary function areas that are consistent with those in ADAAG 4.1.6(2) except for one change. ADAAG 4.1.6 (1)(i) clarifies that the requirement does not apply to work limited solely to electrical, mechanical, or plumbing systems; hazardous material abatement; or automatic sprinkler retrofitting if the work does not involve alteration of elements or spaces required to be accessible. While the advisory committee did not recommend removing this clarification, the Board has removed it as information more appropriately contained in the Department of Justice's (DOJ) implementing regulations. The DOJ regulations further address alterations to areas containing a primary function, including the type of alterations that trigger the requirement for an accessible path of travel.[8]

Section 202.5 clarifies that scoping for alterations, including alterations to areas containing a primary function, applies to qualified historic buildings and facilities, but permits an exception where such alterations would threaten or destroy the historic significance of the building or facility as determined by the State Historic Preservation Officer or Advisory Council on Historic Preservation. This simplifies ADAAG 4.1.7 and removes advisory information from the text of the requirement. Special provisions for specific elements and spaces in ADAAG 4.1.7(3) have been moved to appropriate scoping and technical requirements in the revised guidelines.

203 General Exceptions

The structure of the revised guidelines reinforces the principle that under the general scoping, all portions of sites and facilities are subject to the guidelines unless otherwise noted. This section contains exceptions to the general scoping provisions in 201. Most provisions are substantively the same as those in ADAAG 4.1.1(5) as amended for State and local government buildings, including those addressing construction sites (203.2), raised areas (203.4), limited access spaces (203.5), equipment spaces (203.6), single occupant structures (203.7), and detention and correctional facilities (203.8).

There are two substantive changes involving the ''structural impracticability'' exception and residential facilities (203.9). ADAAG 4.1.1(5)(a) provides an exception for new construction where it can be demonstrated that full compliance is ''structurally impracticable'' due to rare circumstances or the uniqueness of the terrain. The advisory committee recommended removing this exception because it felt that the challenges posed by unique environmental or terrain features can be overcome by good design. Further, such an exception is not recognized by any of the model building codes. Despite the fact that the exception for ''structural impracticability'' has been removed from ADAAG, it still exists in the Department of Justice (DOJ) implementing regulations. See 28 CFR 36.401(c). The term is defined in that same section and provides a narrowly drawn exception for ''unique characteristics of terrain.'' It was removed from ADAAG because the Board made every effort not to duplicate provisions that are in the DOJ regulations. The revised guidelines also include an exception in 203.9 under which access is not required to common use areas that do not serve dwelling units required to be accessible.

203.3 Employee Work Areas

ADAAG 4.1.1(3) requires access to, but not fully within, employee work areas in part because title I of the ADA generally treats access for employees with disabilities as an individual accommodation. The Board intends the word ''employee'' in the term employee work areas to include individuals covered in the definition of employee found in title I of the ADA, as well as other individuals who perform employee-type duties such as independent contractors and volunteers. Employee spaces used for purposes other than job-related tasks, such as break rooms, lounges, and locker rooms are not considered ''work areas'' and must be fully accessible. Other areas that must be fully accessible include, but are not limited to, vending areas, cafeterias, and auditoriums regardless of whether they are restricted to employees. Work areas that also function as public use space, such as patient exam rooms, must be fully accessible for public access, but fixtures and controls within the work area used only by employees are not required to be accessible.

Section 203.3 of the revised guidelines retains this exception for areas used only as work areas. Work areas must be accessible for ''approach, entry, and exit,'' which means location on an accessible route so that people with disabilities can enter and exit the space. The Board interprets this provision as requiring an accessible route to work areas, including complying entry doors or gates. Maneuvering space, including wheelchair turning space, is not required within the work area, and elements within the work area are not required to comply. Also, the Board has added a definition for ''employee work areas'' in section 106 to clarify the limited application of this provision.

The coverage of ''employee work areas'' in section 203.3, like ADAAG 4.1.1(3), means that an accessible route is not required to individual work stations within the area. For example,

[8] 28 CFR 36.403.

an accessible route is required to a restaurant kitchen or the manufacturing space of a plant but not to individual work stations, regardless of the number of stations or the size of the work area. The advisory committee recommended that ADAAG be changed to require an accessible route to each ''individual work station'' instead of to ''work areas.'' Other than the connecting route, work stations would not be required to be accessible. The advisory committee recommended this change for consistency with model building codes which, unlike ADAAG, do not provide a similar exception for work areas. The advisory committee considered that contemporary building and fire codes, for general fire and life safety purposes, have always required in new construction and alterations that a path of travel serving individual work stations be provided for exiting in an emergency. In complying with the code, this path of travel would end up complying with most if not all of the accessible route requirements in ADAAG. The advisory committee therefore considered that changing ADAAG to require an accessible route serving individual work stations would not have dramatic impact. This aspect of the model building codes, as well as general exceptions for equipment and other spaces in section 203, would serve to limit the overall impact of this change in the advisory committee's view. Further, the requirement for an ''accessible route'' to such elements, as opposed to access for ''approach, entry, and exit'' to certain spaces was considered clearer and more easily interpreted.

The Board is committed to harmonizing the ADAAG requirements with the requirements of the model codes and believes that covered entities should apply the recommendations of the advisory committee in most situations, particularly in traditional places of public accommodation, in office buildings, and in schools. However, the Board is concerned that the adoption of this requirement as the minimum level of compliance may prove to be unworkable in some employment settings. Therefore, the Board has not included the advisory committee's recommendations in this proposed rule. However, the Board is considering whether to include the advisory committee's language in the final rule. To facilitate this decision, the Board is seeking responses to the following questions:

Question 1: ADAAG requires that an accessible route be provided to employee work areas, but not to individual work stations. What obstacles have people with disabilities encountered as a result of this provision?

Question 2: The Board is interested in learning what the impact might be if ADAAG requires access to ''individual work stations'' rather than to ''employee work areas.'' For example, how would a facility otherwise be designed and built in the absence of this revised requirement in ADAAG? Any comparative analysis should be based on a design that reflects compliance with contemporary codes, such as the model building codes, and typical design practice. In other words, aspects of an accessible route that would otherwise be provided as a typical design consideration or that would have to be provided in order to comply with a contemporary building code would not be sources of real impact.

Question 3: Are there specific types of individual work stations, not otherwise exempt from access by section 203, that could not be served by an accessible route?

Question 4: The phrase ''areas used only by employees as work areas'' has been misinterpreted or considered unclear. If this requirement is retained in the final rule, how should it be clarified to prevent misinterpretation? If a requirement for work stations is included in the final rule, is the term ''individual employee work stations'' sufficiently specific or is further clarification, qualification, or definition needed?

The revised guidelines differ from ADAAG in that they require employee work areas to be equipped with visual alarms where audible alarms are provided. In effect, this will require visual alarm appliances in most work areas. Where work areas are enclosed by opaque doors and walls, visual alarm appliances will be necessary to provide the required alarm coverage. However, where work areas have translucent walls or doors, carefully placed alarm appliances in adjoining corridors or other spaces can cover the work area. This is a change from current ADAAG, which requires visual alarms in common use and public use spaces, but not in those spaces that serve only as a work area. The Board proposes this change because it is an issue of life safety and because installation of visual alarms after construction can be difficult and expensive. However, in addition to an accessible connecting route, visual alarms would be the only accessible element required for a work area.

The Board estimates that the aggregate cost associated with providing visual alarms in employee work areas for newly constructed buildings is approximately $16.3 million. This estimate is based on several assumptions: (a) an average office building size is 200,000 square feet with 200 square feet per office; (b) the cost of an alarm system complying with existing requirements is $225,000 and approximately 60 to 70 percent of the area of the office building receives visual alarm coverage; (c) visual alarms will be needed in an additional 25 percent of the building area (50,000 square feet, 250 offices) to meet the proposed new requirement; (d) the additional cost for installing the visual alarms in employee work areas is $65,375 ($261 per office); (d) 250 office buildings (averaging 200,000 square feet) are newly constructed each year.

Question 5: This provision would be applicable to both newly constructed buildings and existing buildings when alarm systems are replaced or upgraded, and these alterations affect the usability of the building. The Board does not provide an aggregate cost estimate for existing buildings when alarm systems are altered. The Board recognizes that this cost may greatly exceed the cost for newly constructed buildings. In order to better assess the overall cost of this provision, the Board seeks data on how frequently alarm systems are replaced or upgraded such that they would amount to an alteration and be subject to this provision. The Board has been advised that alarm systems may be replaced as often as every ten years. The reason given is that building owners desire to reduce insurance liability, as well as to provide state-of-the-art protection for building occupants. Is it correct to assume that alarm systems are replaced every ten years? The Board seeks information from businesses that provide fire alarm systems regarding the additional cost of providing visual alarms in employee work areas when alarm systems are replaced or upgraded. Please provide cost data for alarm systems with visual alarm coverage in all employee work areas compared to alarm systems complying with the existing requirements. Lastly, while an average building size is used in developing the cost estimate for newly constructed buildings, the Board seeks comment on whether the provision would have a disproportionate economic impact on small buildings or businesses.

Question 6: Are there less costly alternatives to providing visual alarms in all employee work areas for employees who are deaf or are hard of hearing that provide a comparable level of life safety?

Question 7: Concerns have been raised about limiting the number of

visual alarms for the benefit of people who are photosensitive, as further discussed below at section 702.3. In view of these various considerations, comment is sought on the appropriateness of this requirement, and information is requested on whether there are means available for deactivating individual visual appliances (which may be desired in accommodating employees who are photosensitive) without rendering the entire system ineffective.

Section 203.9 clarifies that in residential facilities access is not required in common use areas not serving required accessible dwelling units. The Board added this provision because guidelines for residential facilities have been included in this rule. This provision would apply in situations where certain common use areas, such as laundry rooms, are intended to serve a portion of dwelling units.

204 Protruding Objects

205 Operable Parts

Sections 204 and 205 are substantively consistent with scoping requirements for protruding objects in ADAAG 4.1.2(3) and 4.1.3(2) and for controls and operating mechanisms in ADAAG 4.1.3(13).

206 Accessible Routes

ADAAG addresses scoping for accessible routes in several areas (4.1.2, 4.1.3, and 4.3). The revised guidelines bring these requirements together into one subsection (206.2) to clarify the requirement for accessible routes from site arrival points, within the site and within buildings and facilities, and to spaces and elements. The revised guidelines more clearly recognize various elements as components of accessible routes. Thus, this section integrates scoping for entrances (206.4), doors and doorways (206.5), elevators (206.6), and wheelchair (platform) lifts (206.7). Changes from ADAAG include:

- clarification that an accessible pedestrian route is not required where only a vehicular way not serving pedestrians is provided (206.2.1 and 206.2.2, exceptions);
- emphasis on the provision of an ''accessible route'' between floors as opposed to an ''elevator'' so that elevator exceptions in ADAAG 4.1.3(5) are relocated to the requirement for an accessible route (206.2.3);
- clarification that in assembly areas an accessible route is not required to serve seating that does not contain wheelchair spaces or designated aisle seats required to be on an accessible route (206.2.3, exception 6);
- clarification that an accessible route between seating and performance areas is required where a direct connection is provided (206.2.6);
- clarification that where the circulation path is interior, the accessible route must be interior as well (206.3);
- removal of the requirement in ADAAG 4.1.3(8) that accessible entrances be provided in a number at least equal to the number of exits required because entrances and exits serve different functions and should not be linked in scoping requirements;
- removal of a requirement in ADAAG 5.7 for an accessible route to raised platforms in banquet rooms since it is premised on elements (head tables and speaker's lecterns) that often are not fixed;
- extending the scope of requirements for security check points and security barriers for airports and certain State and local government facilities to cover all types of facilities that provide security check points and barriers (206.8); and
- removal of ADAAG exception 4(d) to 4.1.3(5) that allows the use of wheelchair lifts where ''existing site constraints or other constraints make use of a ramp or an elevator infeasible'' since this is not considered warranted in new construction.

In addition, several substantive changes are provided that pertain to elevators (206.6). These include recognition of two alternatives to the traditional type of elevator required by ADAAG and the addition of a requirement for altered elevators.

Destination-oriented elevators are different from typical elevators in that they provide a means of indicating the desired floor at the location of the call button, usually through a key pad, instead of a control panel inside the car. Responding cars are programmed for maximum efficiency by reducing the number of stops any passenger experiences. ADAAG does not specifically address this type of elevator, which was not widely in use when ADAAG was first published. The revised guidelines require compliance with newly added technical requirements in 407.3 where destination-oriented elevators are provided instead of traditional types of elevators. There are differences in the technical requirements provided in section 407. For example, standard elevators must provide audible and visual car position indicators that identify floors as they are passed. With destination-oriented elevators, audible and visual indicators must be provided indicating the car destination both when the car arrives in response to the call and when it arrives at the floor destination.

The revised guidelines also permit installation of limited-use/limited-application (LULA) elevators in buildings and facilities not required to have a standard elevator. This type of elevator is characterized by a smaller car among other things. The revised guidelines provide technical requirements in 407.4 and require compliance with the industry safety standard (ASME/ANSI A17.1, Part XXV). The advisory committee recommended addressing LULAs because it considered such elevators a more viable option in situations where a standard elevator is not required. The advisory committee reasoned that some vertical access (via a LULA elevator) is preferable to none.

Question 8: Consistent with ADAAG, the revised guidelines provide an exception for private sector facilities based on the number of stories or the square footage per floor (206.2.3, exception 1). A much narrower exception is permitted for State and local government facilities (206.2.3, exception 2). Are there situations where the use of LULA's should be permitted instead of a standard elevator in certain small State or local government facilities?

A requirement has been added at 206.6.1 that when an elevator is altered, all elevators programmed to respond to the same hall call control shall be brought into compliance so that persons with disabilities are not limited to the use of one car at multi-car elevator banks.

207 Accessible Means of Egress

Requirements for accessible means of egress have been modified for consistency with model building codes and standards, including addition of a new requirement that an elevator be provided as an accessible means of egress in buildings with four or more stories above or below the exit discharge level. The requirement in ADAAG 4.1.3(9) that accessible means of egress be provided in the ''same number'' of required exits has been changed to require at least two accessible means of egress where more than one means of egress is required. The requirement in ADAAG 4.1.3(10) that accessible routes also serve as required exits has been removed because not all accessible routes necessarily have to serve as a required means of egress in order to provide a reasonable minimum level of safety. The reference to ''areas of rescue assistance'' has been changed to ''areas of refuge'' for consistency with model

codes. Exceptions from the requirement for areas of refuge in facilities that are altered or those equipped with supervised automatic sprinkler system have been retained. A new exception clarifies that areas of refuge are not required in open parking garages since the open design permits smoke to escape.

208 Parking Spaces

The revised guidelines maintain the general scoping of ADAAG in 4.1.2(5) but refer to parking spaces generally, instead of to ''self-parking by visitors, employees, or both.'' The Board has added an exception in 208.1 for parking spaces used exclusively for buses, trucks, delivery vehicles, law enforcement vehicles, and vehicular impound and motor pool lots where lots accessed by the public are provided with an accessible passenger loading zone.

ADAAG 4.1.2(5)(d) requires a higher level of scoping for outpatient units and facilities (10%) and those that ''specialize in treatment or services for persons with mobility impairments'' (20%). Sections 208.2.1 and 208.2.2 preserve these scoping requirements but clarify their application to visitor and patient parking (so as to exclude employee parking); ''hospital outpatient facilities'' (10%); and ''rehabilitation facilities and outpatient physical therapy facilities'' (20%). The advisory committee had recommended removing the 10% requirement for outpatient facilities because it questioned the technical basis for it and because the term ''outpatient facility'' is too broad and can be misapplied to doctors' offices and clinics. Instead of removing this requirement, the Board has clarified its application by limiting it to outpatient facilities located in hospitals. The requirement for ''rehabilitation facilities'' is intended to cover facilities providing physical rehabilitation, but not those facilities providing other types of rehabilitation, such as drug or alcohol rehabilitation.

New scoping provisions for residential facilities have been added. Section 208.2.3 provides access to at least one parking space for each accessible dwelling unit where parking is provided. Two percent of any additional parking spaces provided for residents must be accessible. Additionally, guest parking must be made accessible in accordance with Table 208.2. In 208.4.2 dispersion is required throughout all types of parking provided for dwelling units required to be accessible unless equal or greater accessibility is otherwise achieved.

Requirements for identification of accessible spaces in 208.3 allow spaces not to be identified (*i.e.*, reserved solely for use by people with disabilities) where five or fewer spaces in one parking lot are provided. This was recommended by the advisory committee in order to mitigate the impact of a reserved space in very small lots and is based on the model building codes. Identification of spaces is not required at residential facilities where parking spaces are assigned to specific dwelling units. The requirement for the ''van accessible'' designation has been removed to clarify that both car and van drivers can use such spaces, as was the original intent of ADAAG.

ADAAG 4.1.2(5)(e) allows an accessible passenger loading zone instead of accessible parking spaces at facilities with valet parking. This provision has been removed for several reasons. Valet parking often is not available at all hours a facility is open or may be later removed altogether. Further, vehicles specially equipped for persons with disabilities may not be usable by other drivers.

209 Passenger Loading Zones

This section requires that where a passenger loading zone is provided, at least one portion within every continuous 100 feet of loading zone space must be accessible. This replaces the requirement in ADAAG 4.1.5(c) for only one accessible passenger loading zone per site. The new requirement is responsive to facilities, such as airports, where many or long continuous passenger loading zones are provided. The advisory committee recommended that all passenger loading zones be required to be accessible. However, the proposed requirement addresses situations where continuous loading zones are provided and balances the needs of people with disabilities and the costs associated with adding an additional lane for accessible passenger loading.

210 Stairways

This provision requires all stairs that are part of a means of egress to comply with the guidelines. ADAAG 4.1.3(4) requires compliance only at stairs connecting levels not connected by a vertical means of access. The advisory committee recommended this change for consistency with model building codes that recognize the importance of accessible safety features in successfully exiting by stairs. Accessible features in stairways will benefit individuals with mobility impairments, as well as other individuals with and without disabilities. An exception is provided for alterations. Under this exception, stairs between levels that are connected by an accessible route are not required to comply (except for handrails) due to the potential difficulty of altering stairs for compliance within existing space limitations.

211 Drinking Fountains and Water Coolers

This provision requires that where one drinking fountain or water cooler is provided on a site, floor, or within a secured area, access shall be provided for both people who use wheelchairs and for standing persons. Where more than one drinking fountain is provided, 50% are required to be wheelchair accessible and 50% are required to be accessible to standing persons (with rounding up or down permitted where an odd number of units is provided). While substantively consistent with ADAAG 4.1.3(10), this section clarifies the application to exterior units and the coverage of units accessible to standing persons where more than one unit is provided. The advisory committee recommended that the guidelines not address access for standing persons because no technical criteria are provided and because it believed that most drinking fountains would accommodate people who have difficulty bending. The Board believes that access for people who may have difficulty bending or stooping should be retained and has included technical requirements for such access (see 602.7).

212 Sinks, Kitchens, Kitchenettes, and Wet Bars

A requirement has been added that where sinks are provided in accessible spaces, at least 5% (but not less than one) must be accessible, except for mop or service sinks, which are exempt. While ADAAG provides technical requirements for sinks in 4.24, it does not indicate the minimum number required to be accessible. New scoping provisions for kitchens, kitchenettes, and wet bars are generally consistent with transient lodging requirements in ADAAG 9.2.2(7). The revised guidelines extend the application to kitchens, kitchenettes, and wet bars provided, without regard to the type of facility.

213 Toilet and Bathing Facilities

This section is consistent with ADAAG scoping provisions in 4.1.3(11), 4.22, and 4.23 except for one substantive change. Where multiple single-user toilet rooms are clustered at a single location and contain fixtures in excess of the minimum required number of plumbing fixtures, at least 5% of toilet rooms (but not less than one) for

each use at each cluster is required to be accessible (213.2, exception 4). ADAAG, which does not specifically address this situation, requires access to all such toilet rooms. The advisory committee recommended this scoping provision as more appropriate since this arrangement is common in facilities such as medical facilities. Additionally, revisions have been made to clarify that:

- access is not required for toilet or bathing facilities in transient lodging guest rooms (except for the clearance of entry doors), patient or resident sleeping rooms in medical care facilities, holding or housing cells in detention and correctional facilities, or dwelling units that are not required to be accessible (213.2, exceptions 5, 6, 7, and 8);
- unisex bathing rooms must contain at least one accessible shower or bathtub (213.2.1); and
- where only one lavatory is provided, it shall not be located in an accessible toilet compartment (213.3.4).

214 Laundry Equipment

A new scoping provision has been added for laundry equipment and applies to laundry facilities wherever provided. For example, if a transient lodging facility provides laundry facilities for guests, they must be accessible and contain one or more accessible washers and dryers. This section also addresses the need for accessible laundry facilities in, or serving, accessible dwelling units and is necessary since the revised guidelines address residential facilities. Where washing machines or clothes dryers are provided in spaces required to be accessible, at least one of each type is required to be accessible.

215 Emergency Alarm Systems

The requirement for emergency alarm systems is consistent with ADAAG 4.1.3(14). The ADAAG exception that allows such systems to be modified in medical care facilities to suit health care alarm practice has been revised as an exception to the charging statement for the technical section on fire alarm systems (702.1). The advisory committee had recommended that the provision be limited to fire alarm systems for consistency with model codes such as National Fire Protection Agency (NFPA) 72–G. The committee also recommended that an exception for alterations be provided that would require compliance with the requirement for visual alarms only where an alarm system is upgraded or replaced or a new one installed. Instead, the Board is proposing to retain the substance of the current requirement since compliance with any requirement in alterations is required to the extent it is ''technically feasible.'' Given the scope of the work, replacement of a fire alarm system is considered an alteration, not normal maintenance. However, certain upgrades are alterations only if they affect the usability of a room or space. The usability of the space is not affected when a few failing appliances are replaced. The Board has limited the requirement for visual appliances to fire alarm systems instead of ''emergency warning systems.'' In addition, the Board has added a scoping provision that requires other types of alarm systems to be equipped with audible and visual signals but has not provided any technical criteria for these signals.

Question 9: The Board seeks information on facility alarm systems (other than fire alarm systems) that do not instruct occupants to evacuate the facility but provide other warning information, such as those used for tornado warnings and other emergencies. Recommendations are requested on the technical criteria appropriate for the audible and visual signals for such alarm systems, particularly where differentiation from fire alarm system signals is important.

216 Signs

This provision retains the substance of scoping for exterior and interior signs in ADAAG 4.1.2(7) and 4.1.3(16). Several editorial changes are included for clarification. Scoping for tactile signs is modified to apply to ''permanent'' room or space designations in order to clarify coverage of signs that are not likely to change. The Board has added an exception stating that signs designating building addresses or building names are not required to meet requirements for tactile signs. These revisions are consistent with the Board's interpretation of ADAAG.

ADAAG 4.1.7(3)(e) includes a provision for qualified historic facilities which recommends that exhibits and signs displayed horizontally should be no higher than 44 inches above the floor so as to be accessible to be people seated in wheelchairs. The advisory committee recommended that this provision be made mandatory or relocated to an advisory note. The Board believes this specification and its limited application to qualified historic facilities merits further evaluation before adopting it as a mandatory requirement. Consequently, this provision is not included in the revised guidelines.

217 Telephones

Scoping provisions for public pay telephones providing wheelchair access and volume controls are substantively consistent with ADAAG 4.1.3(17)(a) and (b). The Board has provided clarification in 217.1 that scoping applies to one of each type of pay phone provided, including, but not limited to, coin-operated and coinless public pay phones. For example, access is not limited to credit card phones where coin-operated phones are also provided or vice versa. As recommended by the advisory committee, an exception at 217.3 indicates that, where all phones are equipped with volume controls, identifying signage is not required.

Significant changes are proposed for the provision of TTYs. TTYs are devices that provide access to telephones for people who have hearing or speech impairments. At the advisory committee's recommendation, the preferred term ''TTY'' has been used instead of the term ''text telephone'' or ''TDD'; the definition of TTY in section 106 explains that the term is synonymous with ''text telephones'' and encompasses devices known as ''TDDs,'' a term which stands for ''telecommunication display devices'' (or ''telecommunication devices for deaf persons''). ADAAG 4.1.3(17)(c) generally requires that at least one TTY be provided on a site where four or more public pay telephones are provided (and at least one is interior). The advisory committee and the Board consider this requirement inadequate because it does not take into account large sites such as college campuses and shopping malls where people who need TTYs are limited to one TTY-equipped phone. The revised scoping at 217.4 states that in private buildings (*i.e.*, places of public accommodation and commercial facilities) where four or more pay phones are provided at a bank, within a floor, building, or on a site, a TTY is required at each such location. Consistent with previous amendments to ADAAG for State and local government facilities, a lower threshold is provided for public buildings, where one pay telephone on a floor or within a public use area of a building triggers the requirement for a TTY. An exception for the requirement at banks (271.4.1) makes optional TTYs at banks that are within 200 feet of, and on the same floor as, a bank with a TTY. This exception allows reasonable dispersion without triggering a requirement for additional TTYs. The revised provision does not limit scoping to where at least one pay telephone is interior since TTYs for exterior application are readily available.

A new scoping provision is provided for rest stops, emergency roadside stops, and service plazas that requires a TTY

where at least one public pay telephone is provided since telecommunications can be critical at such locations and searching for off-highway TTYs would be impractical. Due to the increased scoping, a TTY requirement specific to stadiums, arenas, conventions centers, etc. in ADAAG 4.1.3(17)(c)(ii) has been removed. Scoping requirements for hospitals and the secured areas of detention and correctional facilities have been retained.

In addition to the advisory committee's recommendations, Board changes include:

- adding a requirement for TTY signage where directional signs for public pay telephones is provided (271.4.9.2); and
- exempting phone banks with TTYs from the requirement for shelves and outlets for portable TTYs (217.5).

218 Transportation Facilities

This provision requires transportation facilities to comply with Chapter 10. Transportation is the one occupancy type (in addition to the chapter the Board has added on residential facilities) that the advisory committee recommended remain a separate chapter. Scoping for other occupancy types covered in ADAAG sections 5 though 12 have been integrated into Chapter 2.

219 Assistive Listening Systems

This section covers requirements for assistive listening systems and receivers in assembly areas. Section 219.2 requires an assistive listening system in each assembly area where audible communication is integral to the space and audio amplification is provided. However, in courtrooms, this requirement also applies where audio amplification is not provided, consistent with ADAAG as amended for judicial facilities. This provision is substantively different from ADAAG 4.1.3(19) in three respects. First, ADAAG requires assistive listening systems in assembly areas without audio amplification if the seating capacity is 50 or more, and the revised guidelines do not, except in courtrooms (regardless of seating capacity). Second, ADAAG's requirement is conditioned on the provision of fixed seats; the revised guidelines would apply to assembly areas with fixed seating and those without. Third, ADAAG requires that assembly areas not subject to the requirement for a ''permanent'' system be equipped with the necessary electrical outlets and wiring for a portable system; the revised guidelines do not specify a ''permanent'' system and do not require outlets and wiring for portable systems. These also represent changes from the advisory committee's report, which recommended a scoping provision generally consistent with ADAAG. The Board is proposing these changes because it believes that any assembly area with audio amplification should be equipped with an assistive listening system whether or not seating is fixed. The Board removed the requirement in ADAAG for outlets and wiring because adequate electrical support is generally available in these assembly occupancies and because the provision of a portable system is more appropriately covered by the DOJ regulation, which contains requirements for the provision of auxiliary aids and services necessary to ensure effective communication.[9]

Section 219.3 specifies the minimum number of receivers according to a sliding scale. This is a change from the flat 4% requirement in ADAAG 4.1.3(19) and was recommended by the advisory committee based on actual and anecdotal evidence that the current requirement exceeds the demand especially in large facilities. Scoping of 4% is maintained for a seating capacity up to 500 seats; seating above this number is reduced to 3.5% (501 to 1000 seats), 2.75% (1001 to 2000 seats), and 1% (over 2000 seats). The revised guidelines include a requirement which is not in ADAAG that a portion of receivers (25% but no less than 2) be compatible with hearing aids. In effect, this requires provision of neck loops, which are the only type of receiver that can be used comfortably with all models of hearing aids equipped with a telecoil.

220 Automatic Teller Machines and Fare Machines

This provision is consistent with ADAAG 4.1.3(20) with respect to automatic teller machines, but it also addresses ''fare vending, collection, or adjustment machines,'' which are only addressed by ADAAG where provided in transportation facilities.

221 Assembly Seating

This section is substantively different from ADAAG requirements and advisory committee recommendations for wheelchair, companion, and designated aisle seating. Section 221.1 lists the types of assembly areas covered: ''a motion picture house, theater, concert hall, stadium, arena, auditorium, convention center, lecture hall, courtroom, legislative chamber, or similar assembly area.'' This approach of defining the section's coverage by providing a list of exemplary covered entities is a departure from that in the existing ADAAG 4.1.3(19), which describes covered entities as ''places of assembly with fixed seating.'' By limiting coverage to the listed entities and ''other similar assembly areas,'' the revised guidelines clarify that assembly areas like libraries or restaurants are not required to comply with the requirements of 221.

Section 221.2 revises the number of wheelchair spaces required (Table 221.2.1). For a seating capacity up to 50 spaces, the requirement is the same as ADAAG 4.1.3(19). For a seating capacity of 51 to 150 seats, 4 wheelchair spaces are required, and for a seating capacity of 151 to 300 spaces, 5 wheelchair spaces are required. The remainder of the table coincides with ADAAG. The advisory committee recommended the scoping increase (although it recommended that 5 wheelchair spaces be provided starting at 101 seats instead of 151). Also, the advisory committee recommended that scoping for a seating capacity over 500 be reduced from 1% to 0.5% based on anecdotal information on usage. The Board is not persuaded by this anecdotal information and is proposing to retain the ADAAG requirement of 1%. Section 221.2 also states that wheelchair spaces shall be provided in each luxury box, club box, and suite. This is consistent with Department of Justice interpretations of ADAAG that treat each such box or suite as a discrete assembly area. Wheelchair spaces must be integrated into the general bowl design and seating plan and cannot be set aside on a separate platform or level where there is little or no other seating. Integration of wheelchair spaces will provide opportunities for social interaction with persons sitting in the closest seats.

The advisory committee recommended that wheelchair spaces be clustered and specified the number of wheelchair clusters permitted, which, in effect, served to govern the minimum level of dispersion. The advisory committee also recommended a reduced level of dispersion where sight lines require more than one step for a rise in elevation between rows and in alterations where dispersion is not technically feasible. The Board has not adopted this recommendation. The Board has included requirements for dispersion as a technical requirement (see 802).

Section 221.3 contains a requirement included by the Board that a companion seat be provided for each wheelchair space and that this seat be readily removable to create an additional wheelchair space. This is consistent with current interpretations of the

[9] 28 CFR 36.303 and 28 CFR 35.160.

requirement for one companion seat to be provided next to each wheelchair seating area. However, ADAAG 4.33.3 requires companion seats to be fixed but does allow readily removable seats to be installed in wheelchair spaces. The revised provision will afford greater flexibility in seating arrangements by allowing the choice of either a companion seat or another wheelchair space next to each required wheelchair space. The Board considered other options for addressing problems presented by fixed companion seating. Those options included: requiring a lesser number of fixed companion seats than wheelchair spaces in larger assembly areas; requiring that a specified number of wheelchair spaces be designated to accommodate a group of three or more persons using wheelchairs; or opting for no change from the requirement in the current ADAAG. The requirement for readily removable companion seating was chosen for simplicity, because it promotes greater flexibility in the seating configurations. However, the Board has included an exception providing that fixed companion seating is permitted in assembly areas with a capacity of 300 or fewer seats. This exception is provided because the requirement for removable companion seats would have a disproportionate impact on smaller assembly facilities where no more than five wheelchair and companion spaces are required.

Question 10: The Board seeks information on the impact of the requirement that each wheelchair space have an adjacent companion seat that can be removed to provide an adjoining wheelchair space. Of particular interest are recommendations on design solutions or alternative scoping requirements that will mitigate the space impact while affording a similar level of flexibility in seating arrangements.

Question 11: The Board believes that readily removable seats should provide a companion with virtually the same experience in terms of comfort and usability as fixed seats in the same assembly facility. What specific characteristics should the readily removable seat have when compared to other seats? While a metal folding chair is not equivalent to a plush theater-style seat, is it sufficiently comparable to a bleacher seat?

Section 221.4 requires that 1% of seats be designated aisle seats. At least 25% of the designated aisles seats must be on an accessible route, and the remainder no more than two rows from an accessible route. ADAAG 4.1.3(19) provides a similar requirement that 1% of seats be aisle seats with removable, folding, or no armrests. This requirement is intended to serve people who may have difficulty walking between rows of seats, use assistive devices for ambulation, or wish to transfer from wheeled mobility aids. The advisory committee did not recommend retaining this requirement because, with respect to wheelchair transfers, questions arise about the proximate storage of mobility aids and the potential obstruction of aisles by mobility aids. Further, the advisory committee noted that ADAAG did not require an accessible route to such seats, which brought into question the usefulness of this requirement for people wishing to transfer from wheelchairs to seats. The Board has included a requirement for a portion of aisle seats to be on accessible routes for people using wheelchairs who wish to transfer to seats. Since aisle seats also benefit people who have difficulty walking, including between rows of seats, but who can use stairs, the remainder of seats can be separated from the accessible route by no more than two rows.

Question 12: At least 1% of seats must be designated aisle seats that have folding or removable armrests or no armrests. The Board seeks information on the cost and related design impacts of locating at least 25% of these designated aisle seats on an accessible route and of locating the remainder of such seats no more than two rows from an accessible route.

Section 221.5 provides a new requirement that where elevators or wheelchair lifts are provided on an accessible route to wheelchair spaces or designated aisle seats, they shall be provided in ''such number, capacity, and speed'' in order to provide a level of service equivalent to that provided in the same seating area to patrons who can use stairs or other means of vertical access. The Board added this requirement to ensure an equal level of convenience between accessible seating and inaccessible seating. Architects plan for efficient ingress and egress when they design assembly facilities, particularly stadiums. Designers should have available circulation data that is part of the architectural program and design. Generally, designers of new facilities have sufficient knowledge of the travel time between points (*e.g.*, between the entry gate and seats or between the seats and concession stands) to comply with this requirement for equivalent vertical access.

222 Dressing, Fitting, and Locker Rooms

This provision is generally consistent with ADAAG 4.1.3(21), but it also specifically references locker rooms in order to clarify the intended application. An exception permitting unisex facilities for altered dressing, fitting, or locker rooms derives from a similar provision in ADAAG 4.1.6 (3)(h).

223 Medical Care Facility Patient or Resident Sleeping Rooms

This provision is substantively the same as ADAAG 6.1 in providing scoping for patient or resident sleeping rooms. The revised guidelines clarify coverage of ''licensed medical and long-term care facilities.'' The description of the facilities covered has been simplified by removing the ADAAG reference to medical facilities ''where persons may need assistance in responding to an emergency,'' as the advisory committee considered this portion of the description not useful. Scoping for alterations and additions in ADAAG 6.1(4) has been simplified in stating that the minimum percentage is to be based on the total number of sleeping rooms added or altered.

While section 223 specifies the minimum number of sleeping rooms required to be accessible in medical care facilities, it does not specify dispersion among different types of sleeping rooms. The Board believes that accessible bedrooms should be dispersed among all units or departments providing overnight stay and among different classes of rooms, such as private, semi-private, etc. Industry practice and needs assessment can be used to further determine the distribution. For example, a greater number of accessible sleeping rooms might be located in general surgical units than in pediatric or obstetric wards. However, the use and designation of units or types of rooms often change over time as needed.

Question 13: The Board seeks comment on how dispersion of accessible sleeping rooms can be effectively achieved and maintained in medical care facilities such as hospitals and long term care facilities. A requirement for such dispersion may be included in the final rule.

224 Transient Lodging Guest Rooms

The minimum number of accessible guest rooms required has not been changed from that provided in ADAAG 9.1.2. However, Table 224.2 clarifies that guest rooms with roll-in showers are to be provided in addition to the basic number of required accessible

guest rooms. In addition, there are two substantive changes that are also based on the advisory committee's recommendations. First, section 224.3 is new and addresses the number of beds required to be accessible for situations such as homeless shelters, where a room may have a large number of beds. Scoping is provided in Table 224.3.

Second, the Board has significantly revised the scoping provisions in section 224.4 for the number of guest rooms equipped with accessible communication features, including visual alarms and devices that provide visual notification of incoming telephone calls and door knocks or bells. ADAAG 9.1.3 provides a minimum number according to a sliding scale based on the total number of rooms provided. It requires 1 in 25 rooms to comply up to a guestroom count of 100. Scoping successively decreases to 1 for every 50 rooms for the next 101 to 200 rooms and to 1 for every 100 rooms for the next 201 to 500 rooms. For facilities with 501 to 1000 rooms, 2% of rooms must comply and where the room count exceeds 1000, the scoping drops to 1%. ADAAG 9.2.2(8) requires that all wheelchair accessible rooms be equipped with accessible communication features in addition to a number of rooms required to provide communication access only. The Board is proposing to increase the minimum number of rooms that provide accessible communication features to 50% of the total number of guest rooms provided. This increase is proposed for several reasons. The communication features addressed in this requirement address life safety in providing visual notification of fire alarms for people who are deaf or hard of hearing. Higher scoping will also afford greater flexibility in the guest room assignment of people who are deaf or hard of hearing, particularly in light of revisions to technical requirements for visual alarms in section 702.3 that effectively preclude the use of portable visual alarm devices. Further, anecdotal evidence indicates that operational alternatives used in accommodating individuals who are deaf or hard of hearing, including the use of portable devices and facility staff to directly alert guests of the need to evacuate the facility, are unreliable and ineffective.

Question 14: Permanent installation of visual alarm appliances is considerably cheaper and easier to achieve as part of facility design and construction than as a retrofit. The Board requests information on the new construction cost difference between providing visual alarms and notification devices for incoming telephone calls and door knocks or bells according to the scoping in ADAAG 9.1.3 and the proposed 50% scoping requirement. Information is also sought on whether exceptions should be provided for altered facilities or additions.

Question 15: It is the Board's understanding that some transient lodging facilities, particularly hotel chains, have adopted voluntary policies requiring permanently installed visual alarms in all or a majority of newly constructed guest rooms. Please provide information regarding those transient lodging facilities that have such a policy. Are there less costly alternatives to providing visual alarms in fifty percent of guest rooms that will provide guests who are deaf or are hard of hearing a comparable level of life safety?

Section 224.5 requires dispersion of accessible rooms among the various classes of rooms provided, including room type, bed type, and other amenities to a degree comparable to the choices provided other guests. This is similar to a requirement in ADAAG 9.1.4(1). A clarification has been added that when complete dispersion is not possible due to the number of rooms required to be accessible, dispersion is to be provided in the following order of priority: room type, bed type, and amenities. The advisory committee recommended that the factors for dispersion were more appropriate for advisory information. The Board has retained this provision in the text of the rule since it contains mandatory direction. Consistent with the advisory committee's recommendation, section 224.5 also requires communication access in 50% of the wheelchair accessible guestrooms in addition to the requirement in section 224.4. This differs from ADAAG 9.2.2(8) which requires that all wheelchair accessible guestrooms be equipped with accessible communication features.

225 Self-Service Storage Facilities

This is a new requirement recommended by the advisory committee. ADAAG does not specifically address self-service storage facilities, and many ADAAG users questioned how access should be provided. Scoping as provided in Table 225.1 is 5% but drops to 2% after the first 200 spaces. Accessible storage spaces are required to be dispersed among the various classes of units provided to the extent the number of accessible spaces allows. Where a facility is comprised of multiple buildings, accessible spaces can be clustered in one building. This provision addresses concerns raised by the self-storage industry regarding the number of entrances required to be accessible in facilities that may have more than fifty entrances to separate spaces. The advisory committee believed these unique circumstances warranted specific attention.

226 Dining and Work Surfaces

Scoping for dining and work surfaces is consistent with ADAAG 4.1.3(18). This provision integrates requirements for dispersion and dining counters that derive from the section on restaurants and cafeterias in ADAAG 5.1 and 5.2, respectively. However, the revised guidelines apply the dispersion requirement generally to all dining and work surfaces, whereas ADAAG 5.1 requires dispersion only for restaurant and cafeteria seating.

227 Sales and Service Counters

This section corresponds to requirements for business and mercantile facilities in ADAAG 7. Section 227.2 provides scoping for check-out aisles that is consistent with ADAAG 7.3. This scoping however is not limited to business and mercantile occupancies and applies to all facilities with check-out aisles. It replaces a requirement in ADAAG 8.3 specific to check-out areas in libraries that requires at least one lane at check-out areas to comply. There is a substantive change to exceptions from the scoping requirement. ADAAG 7.3 permits only one check-out aisle to be accessible where selling space is less than 5000 square feet. It also permits one check-out aisle of each design to be accessible in alterations of facilities with more than 5000 square feet of selling space. This is required until the number of accessible check-out aisles of each design equals the number required in new construction. The advisory committee recommended retaining these exceptions. However, the Board has removed the exception for facilities with less than 5000 square feet of selling space because small facilities rarely have more than one check-out aisle. In fact, small facilities generally have point of sales and service counters in lieu of check-out aisles. The exception for alterations has been retained but has been made generally applicable and is not limited to facilities with more than 5000 square feet of selling space. Requirements for identification of accessible check-out aisles in 227.2.1 includes a clarification that, where all check-out aisles are accessible, such identification is not required.

Section 227.3 covers point of sales and service counters. This provision is consistent with ADAAG 7.2 except that no distinction is made between counters

with cash registers and those without, which the advisory committee considered insignificant.

Requirements for food service lines in ADAAG 5.5 have been integrated into the scoping provision in 227.4. A new provision for queues and waiting lines at 227.5 clarifies that an accessible route is to be maintained where a defined circulation route is provided. A requirement for an accessible route through security bollards in ADAAG 7.4 has been clarified and relocated to section 206.8. Section 206.8 clarifies that security may not obstruct ingress or egress.

228 Storage

Provisions for storage are consistent with those in ADAAG 4.1.3(12). Examples of the types of storage elements covered have been moved to an advisory note. A new provision is provided in 228.2 that requires at least 5% of lockers to be accessible. Requirements for self-service shelving in section 228.3 are consistent with ADAAG 4.1.3(12). The Board has removed a reference to display units because displays are not to be touched and therefore cannot be self-service. The requirement has been made generally applicable to all facilities types, not just mercantile occupancies, and effectively replaces requirements in ADAAG 8.5 specific to library stacks. A new provision is added for coat hooks and folding shelves in 228.4 to clarify, that where such elements are provided in toilet rooms or compartments, locker rooms, or dressing and fitting rooms, at least one of each type shall be accessible.

229 Depositories, Vending Machines, Change Machines, and Mail Boxes

This provision represents a change from ADAAG 5.8 which addresses vending machines and other equipment in restaurants and cafeterias. ADAAG provides only for clear floor space at such equipment. Consistent with the advisory committee's recommendation, requirements have been added for wheelchair turning space and the location of operable controls within accessible reach ranges in accordance with section 309 at vending machines. In addition, the Board has added a requirement that operable controls meet the operating characteristics specified. The Board also has added specific references to ''depositories, change machines, and mail boxes'' and an exception that exempts drive-up only depositories from compliance. In view of the coverage of residential and other commercial facilities, the Board has included a provision that 5% of mail boxes be accessible where provided in an interior location. In residential facilities where interior or exterior mail boxes are provided on site, access is required to mail boxes serving dwelling units that are required to be accessible. The Board does not intend that this provision address U.S. Postal Service mail boxes in the public right-of-way because these elements may be provided in communities without accessible routes.

230 Windows

The technical provisions for windows are reserved in ADAAG. Where glazed openings are provided for operation by the occupants of accessible spaces, the revised guidelines include a new provision which requires access to at least one glazed opening. In accessible rooms or spaces, access is also required to each glazed opening required by the administrative authority to be operable. The advisory committee and the Board reasoned that if windows are to be operable, they must be operable by all potential building occupants, including people with disabilities. Furthermore, new technology, including mechanical or electrical devices makes providing accessible windows possible.

Section 230 requires that the operable parts of windows be accessible, but it does not address the height of glazed openings. Requirements for toilet room mirrors specify that the bottom edge of the reflecting surface be no more than 40 inches from the floor (section 603.3), and provisions for automatic teller machines require display screens to be visible from a point 40 inches above the center of the clear floor space in front of the machine (section 707.5.4).

Question 16: Should a maximum sill height for the glazed area of those windows required to be accessible be specified in the final rule so that people who use wheelchairs, located on any floor, can look through the window to view ground level activities? If so, what should this height be? The Board also seeks information on any design requirements, practices, or considerations that would specify installation above an accessible height in certain occupancies for security or safety reasons, such as to guard against break-ins or to prevent improper use by building occupants, including children. Information is sought on any other design impacts, such as the use of the space or cavity below windows for mechanical or other building systems.

231 Two-Way Communication Systems

In amending ADAAG to cover State and local government facilities, the Board added a requirement that where a two-way communication system is provided to gain admittance to a judicial, legislative, or regulatory facility, audible and visual signals must be provided. Also included was a requirement that handsets have a cord at least 29 inches long. In the revised guidelines, the Board has made this requirement applicable to all types of facilities where such two-way communication systems are provided.

232 Judicial Facilities

This provision integrates scoping requirements for judicial facilities contained in ADAAG 11 without substantive change. Provisions in ADAAG 11 for legislative and regulatory facilities have been integrated into other scoping provisions of Chapter 2.

233 Detention and Correctional Facilities

This section covers scoping for detention and correctional facilities, including the minimum number of holding and housing cells required to be accessible. These provisions are based on ADAAG 12 and have been edited to be consistent with the format of the revised guidelines. In addition, several substantive changes have been made. ADAAG 12.4.5 reserves scoping for accessible holding or housing cells in alterations. In publishing final amendments for State and local government facilities, the Board acknowledged that prison operators commenting on the proposed amendments urged that access not be required in altered correctional facilities because some existing facilities would not be able to support inmates with disabilities even if cells were made accessible. These comments also pointed to difficulties in complying due to design constraints unique to correctional facilities. In response, the Board had reserved a proposed scoping requirement for altered cells, but noted that public entities, including correctional entities, have an obligation to provide program access, as required by the Department of Justice (DOJ) title II regulations. Further, the Board noted that the program access requirement may effectively determine the degree of access necessary in an alteration. In the revised guidelines, the reserved provision has been replaced with an exception at 233.2 which states that in the alteration of holding or housing cells or rooms accessibility is required ''to the extent determined by the Attorney General.'' DOJ's title II regulation states that public entities must operate each service, program, or activity so that the service, program, or activity, when

viewed in its entirety, is readily accessible to and usable by individuals with disabilities. DOJ may revise its title II regulation to provide more specific guidance as to the extent to which the requirements for accessible cells or rooms in detention and correctional facilities apply to alterations. A similar exception also is provided for special holding and housing cells or rooms in section 233.3.

Exceptions are provided at F223.2 and F233.3 for corresponding provisions for detention and correctional facilities covered by the ABA. These exceptions, however, refer to applicable agency regulations implementing section 504 of the Rehabilitation Act for determining the extent to which access is required in the alterations of cells or rooms in detention and correctional facilities. The lack of a specific requirement for alterations to cells or rooms does not excuse a Federal agency or a federally funded entity from providing access to all of a prison's programs and services, when viewed in their entirety, if required under applicable section 504 regulations.

In addition, two other changes have been made by the Board:

- guidance is provided on the number of beds required to be accessible within a room as specified for transient lodging facilities in Table 224.3; and
- scoping for accessible communication features in wheelchair accessible cells has been reduced from 100% to 50%, consistent with revised scoping for transient lodging facilities.

234 Accessible Residential Facilities

The Board has added new scoping requirements for accessible residential housing covered by the ADA. This section requires that at least 5% (but no less than one) of the total number of dwelling units be accessible. An additional 2% minimum of the dwelling units are required to be equipped with accessible communication features but are not required to be wheelchair accessible. Dispersion of accessible units is required among the various types of units provided so that people with disabilities have choices of dwelling units comparable to and integrated with those available to other residents.

Part II: ABA Application and Scoping

This part provides application and scoping requirements for facilities covered by the ABA. The Board develops and maintains minimum guidelines for buildings and facilities covered by the ABA [10]. These guidelines serve as the basis for standards issued by four standard-setting Federal agencies: the General Services Administration (GSA), the Department of Defense (DOD), the Department of Housing and Urban Development (HUD), and the U.S. Postal Service (USPS). Representatives of these agencies, as well as those of other departments, serve as Federal members of the Board. In this capacity, these agencies have coordinated closely with the Board in updating the ABA accessibility guidelines.

The Board has based the ABA scoping and application sections on the revised ADA scoping and application sections of Part I. This will ensure greater consistency between both scoping documents and will serve to establish greater uniformity in the level of access among facilities covered by the ADA or the ABA. The Board previously adopted a resolution introduced by GSA to ensure that the level of accessibility established for federally funded facilities in this rulemaking meets or exceeds that proposed for the private sector and State and local government sectors under the ADA. To this end, differences or departures from the ADA scoping and application sections have been minimized. Most changes are necessary due to differences between the ABA and ADA statutes and regulations issued under them. For example, the ABA covers facilities leased by Federal agencies and the guidelines for the ABA reflect this statutory difference. The guidelines for the ADA and ABA are being consolidated in one part of the Code of Federal Regulations (36 CFR Part 1191). The following discussion explains substantive differences from the application and scoping requirements for facilities covered by the ADA as discussed in Part I.

F103 Modifications and Waivers

The ABA recognizes a process under which covered entities may request a modification or waiver of the applicable standard. The standard-setting agencies may grant a modification or waiver upon a case-by-case determination that it is clearly necessary. This modification and waiver process is recognized in section F103 as a substitute to the provision for ''equivalent facilitation'' in section 103 provided for facilities subject to the ADA.

F106 Definitions

Several defined terms in section F106.5 differ from those in the ADA application section. These include ''dwelling unit'' and ''transient lodging'' which have been simplified and made mutually exclusive. Definitions for ''joint use'' and ''lease'' are included that pertain to provisions specific to the ABA covering leased facilities. Definitions of ''private building or facility'' and ''public building or facility'' are not included because these terms are used to distinguish between places of public accommodation and commercial facilities covered by title III of the ADA (private) and State and local government facilities covered by title II of the ADA (public).

F202 Existing Buildings and Facilities

F202.2 Additions

Section F202.2 addresses additions to existing facilities and provides specific criteria for accessible routes, entrances, and toilet and bathing facilities that derive from the current standard, UFAS. These provisions have been retained but are not provided in the ADA scoping document. Provisions in this section for public pay telephones and drinking fountains have been included for consistency with a requirement in the ADA scoping document for an accessible path of travel for certain additions (202.2).

F202.6 Leases

The ABA requires access to facilities leased by Federal agencies. Section F202.6 contains scoping requirements for facilities that are newly leased by the Federal government, including new leases for facilities previously occupied by the Federal government. The negotiation of a new lease occurs when (1) the Federal government leases a facility that it did not occupy previously; or (2) an existing term ends and a new lease is negotiated for continued occupancy. The unilateral exercise of an option which is included

[10] The ABA covers: (1) facilities constructed or altered by or on behalf of the United States; (2) facilities leased in whole or in part by the United States; (3) facilities financed in whole or in part by a grant or loan made by the United States, if such building or facility is subject to standards for design, construction, or alteration issued under authority of the law authorizing such grant or loan; and (4) facilities to be constructed under authority of the National Capital Transportation Act of 1965, or title III of the Washington Metropolitan Area Transit Regulation Compact. Notwithstanding the above, the ABA does not cover: a privately owned residential structure not leased by the Government for subsidized housing programs; or, any building or facility on a military installation designed and constructed primarily for use by military personnel without disabilities. The current ABA standard exempts various military facilities consistent with the statute (UFAS 4.1.4(2)); this exclusion has not been retained in the revised guidelines as it is more appropriately contained in the implementing regulations issued by the DOD and the other standard-setting agencies.

as one of the terms of a preexisting lease is not considered the negotiation of a new lease. Negotiations which do not result in a lease agreement are not covered by this section. Provisions in this section address joint-use areas, accessible routes, toilet and bathing facilities, parking, and other elements and spaces. Corresponding changes concerning coverage of leased facilities appear in the sections stating the purpose (F101) and the overall scope of the guidelines (F201.1).

F234 Housing

The proposed scoping provisions for dwelling units covered by the ABA are identical to those proposed for the ADA. However, UFAS 4.1.4(3) effectively allows the Department of Defense the option to modify units when the need arises as opposed to providing accessible units at the time of construction and to do so on an installation-by-installation basis. This flexibility allows the military departments to leave families without disabilities in accessible units and to modify units to suit the needs of families with disabilities.

Question 17: Should a similar exception be included in the revised guidelines that would permit accessible dwelling units under control of the Department of Defense to be designed to be readily and easily modifiable to be accessible provided that modifications are accomplished on a first priority basis when a requirement is identified? Also, should a similar exception be provided that permits provision of access on an installation-by-installation basis?

Other Differences from ADAAG

Certain provisions or exceptions in the ADA scoping section applicable only to the private sector (*i.e.*, places of public accommodation and commercial facilities) or recognized only by the ADA are not included in the ABA scoping section. These include:

- an exception that permits a limited level of access to work areas for approach, entry and exit and that does not otherwise require the area itself to be accessible (203.3);
- an exception from the requirement for an accessible route in private multi-level buildings and facilities that are less than three stories or that have less than 3,000 square feet per floor (206.2.3, Exception 1);
- TTY scoping provisions specific to private buildings (217.4.2.2 and 217.4.3.2); and
- an ADA exception from the requirement for accessible guest rooms for certain places of lodging that have five or fewer rooms for rent or hire (224.1, Exception).

Part III: Technical Requirements

Part III provides technical requirements (Chapters 3 through 11) that are referenced by the ADA and ABA application and scoping documents. These requirements are based on recommendations from the advisory committee unless otherwise noted. The following analysis describes substantive differences between the revised guidelines and ADAAG technical requirements.

Chapter 3: Building Blocks

Chapter 3 contains basic technical requirements considered to be the ''building blocks'' for accessibility as established by the guidelines. All sections of this chapter correspond to ADAAG requirements. They are referenced by scoping provisions in Chapter 2 and by the technical chapters (4 through 11).

302 Floor or Ground Surfaces

This section is substantively similar to ADAAG 4.5. Section 302.1 requires floor or ground surfaces to be ''stable, firm, and slip resistant'' as does ADAAG 4.5.1. ADAAG however provides scoping language in this requirement that has not been included in 302.1. Instead, other technical sections, such as those for walking surfaces (403), ramps (405), and stairways (504) reference this requirement. ADAAG also applies the requirement generally to ''accessible rooms and spaces,'' a requirement that has not been retained in the revised guidelines because nearly all rooms and spaces must be accessible.

Section 302.2 which addresses carpet is consistent with ADAAG 4.5.3. Section 302.3 covers openings and derives from ADAAG 4.5.4. This requirement has been revised to cover ''openings'' instead of ''gratings'' in order to cover all types of openings in a floor or ground surface that would be an impediment to mobility in addition to gratings, such as expansion joints and spaced wood decking. Clarification is also provided that this requirement does not apply to elevators or wheelchair lifts where an opening between the car and the floor level is necessary to operate the elevator.

303 Changes in Level

This section is the same as ADAAG 4.5.2 except for editorial changes.

304 Wheelchair Turning Space

Consistent with ADAAG 4.2.3, this section recognizes circular and T-shaped turning space and provides textual description of the size and dimensions for each contained in ADAAG Figure 3. Unlike ADAAG, this section clarifies that elements with knee and toe clearance can overlap turning space. It explains the extent to which overlap is permitted, limiting it to one segment of the T-shaped space. The overlap of circular turning space is not specifically limited although the maximum depth for knee and toe space has been increased from 19 to 25 inches as indicated in section 306. Additionally, clarification is provided that, in general, doors can swing into the turning space but that changes in level or slopes greater than 1:48 are not permitted within the space.

305 Clear Floor or Ground Space

This section is consistent with ADAAG 4.2.4 and provides clarification that changes in level and slopes greater than 1:48 are not permitted within the clear floor or ground space.

306 Knee and Toe Clearance

The revised guidelines provide specifications for knee and toe clearances as a basic ''building block.'' The specifications correspond to knee and toe clearances provided in ADAAG specifically for plumbed fixtures, including drinking fountains (4.15) and lavatories (4.19). The new format recognizes these clearances for other elements as well, such as tables and counters. There are two substantive changes. The maximum depth for the knee and toe space specified in 306.2.2 and 306.3.2 has been increased from 19 to 25 inches. The advisory committee recommended this change for consistency with an ADAAG specification in Figure 5(b) for obstructed reaches which recognizes a 25 inch maximum depth. The other change concerns removal of the ADAAG specification of a 29 inch minimum apron clearance at lavatories, which the advisory committee considered ineffective without a minimum depth. Further detail has been added about the clearance between the knee and toe space; this clearance is permitted to be reduced at a rate of 1 inch for each 6 inches in height. The advisory committee's intent was to describe in text the sloping profile of the space between knees and toes in ADAAG Figures 27(a) and 31.

307 Protruding Objects

This section is substantively consistent with ADAAG 4.4 except for the addition of three exceptions. An exception to the requirement for protrusion limits in 307.2 permits handrails serving stairs and ramps to

protrude 4½ inches maximum from wall surfaces. This was recommended by the advisory committee to prevent conflict with model code requirements. An exception to the requirement for post-mounted objects in 307.3 exempts the sloping portions of ramp or stair handrails. The Board has added an exception to the requirement for vertical clearances in 307.4 that permits door closers and door stops to encroach up to 2 inches into the 80 inch minimum clearance. This exception clarifies a common question concerning standard size doors. This section uses the terms ''wall'' and ''post'' to provide a reference point for measuring protrusions. The terms are to be liberally construed. For example, a partition or a column is understood to provide a wall surface.

308 Reach Ranges

This section is consistent with forward and side reach range requirements in ADAAG 4.2.5 and 4.2.6, including obstructed reaches. Forward reach ranges are 48 inches maximum and 15 inches minimum; side reach ranges are 54 inches maximum and 9 inches minimum. The advisory committee recommended that the side reach range, including obstructed reaches, be changed to those required for forward reaches. This recommendation was based on a report from the Little People of America which considered the 54 inch height beyond the reach for many people of short stature. The advisory committee also considered the 48 inch maximum for side reaches as preferable for people who use wheelchairs.

The Board has not included this recommended change in the proposed rule because it believes a change to this long-standing provision requires further research. The reach range specifications apply to a wide variety of controls and elements, from gasoline dispensers to ATMs to information kiosks to off-street parking meters and self service parking payment and ticket machines. The Board believes information on the impact of the recommended change on these and other types of elements should be developed before proposing any reduction in the maximum side reach height. However, the most recent draft of the ICC/ANSI A117.1–1998 does lower the high side reach to 48 inches, therefore, new codes based on this standard will be more stringent in this regard. The experience of the building industry and people with disabilities will provide an invaluable resource in subsequent revisions of ADAAG.

309 Operable Parts

Requirements for operable parts are consistent with those for controls and operating mechanisms in ADAAG 4.27.

Section 309.4 specifies that operable parts not require more than 5 pounds of force for operation. This long-standing specification appears sufficient for controls operated by the hand, such as door hardware, faucets, and push plates. However, anecdotal information indicates that a 5 pound maximum is too high for controls activated by a single finger, such as elevator call and control panel buttons, platform lift controls, telephone key pads, function keys for ATMs and fare machines, and controls for emergency communication equipment in areas of refuge, among others. Usability of such controls also may be affected by how far the button or key must be depressed (*i.e.*, the stroke depth) for activation. Information indicates that most control buttons of keys can meet a 3.5 maximum pounds of force and a maximum stroke depth of 1/10 inches. The Board is considering including these specifications in the final rule based on responses to the following questions.

Question 18: Comment is sought on whether a maximum 3.5 pounds of force and a maximum 1/10 inch stroke depth provide sufficient accessibility for the use of operable parts activated by a single finger.

Question 19: The Board seeks information on any types of operable parts covered by the revised guidelines that cannot meet, or would be adversely affected by, a maximum 3.5 pounds activation force and maximum 1/10 inch stroke depth.

Chapter 4: Accessible Routes and Accessible Means of Egress

In the revised guidelines, all components of accessible routes and means of egress have been combined into one chapter, including walking surfaces, doors, ramps, elevators, wheelchair lifts, and areas of refuge. Section 402 indicates that accessible routes consist of these components.

403 Walking Surfaces

''Walking Surfaces'' is a new term that has been introduced to refer to the portion of interior or exterior accessible routes existing between doors and doorways, ramps, elevators, or lifts. The requirements for walking surfaces derive from specifications for accessible routes in ADAAG 4.3 and are substantively the same in addressing floor or ground surfaces, slope, changes in level, clear width (including for turns around objects), wheelchair passing space, and protruding objects. There are three changes from technical requirements in ADAAG:

- the maximum cross slope has been changed from 1:50 to 1:48 throughout the revised guidelines for consistency with model building codes (403.3);
- a new specification has been added that requires a minimum linear separation of 48 inches between permitted reductions in the 36 inch minimum clear width (403.5); and
- for turns around objects, clarification has been added that, where a 60 inch minimum width at a turn is provided, the clear width of the connecting route can be 36 inches minimum instead of 42 inches minimum because 60 inches permits 360 degree maneuvering (403.5.1).

Question 20: The revised guidelines, like the current ADAAG, provide technical criteria for handrails along stairs and ramps. Section 505 of the revised guidelines provide requirements for continuity, height, clearance, gripping surface, cross section, fittings, and extensions. Handrails provided at other locations, such as along corridors in medical care facilities and airports, are not subject to these criteria except at stairs and ramps. The Board seeks comment on whether handrails, where provided along circulation paths without a slope or steps, should be subject to the technical requirements in 505. Such a requirement may be included in the final rule.

404 Doors and Doorways

This section provides requirements for doors and doorways which correspond to those in ADAAG 4.13. Requirements for entrances in ADAAG 4.14, which are basically scoping in nature, have been relocated to Chapter 2 as part of scoping provisions for accessible routes (206.4).

Like ADAAG, requirements are provided for manual doors (404.2) and automatic doors (404.3). The Board has provided an exception in 404.2 for manual doors, doorways, and gates operated only by security personnel under which compliance with requirements for door hardware, closing speed, and door opening forces is not required. This exception is based on one provided in ADAAG for judicial facilities and detention and correctional facilities. For consistency, the Board has made this exception generally applicable to all facilities. Security personnel must have sole control of doors that are eligible for this exception. It would not be acceptable for security personnel to operate the doors for people with disabilities while others have independent access. A similar

exception is provided for automatic doors in 404.3.

Section 404.2.3 addresses clear width and is different from ADAAG in several respects. An exception in ADAAG 4.13.5 that allows a 20 inch minimum clearance at doors not requiring full user passage has been removed because such doors are not part of an accessible route. Clarification has been provided on the protrusion of door hardware into the clear width. ADAAG indicates that the clear width is to be measured to the face of the door. However, the clear width requirement has been misinterpreted as prohibiting certain door hardware, such as panic bars, from protruding into this clearance. Language has been added which prohibits projections into the minimum clear width at heights below 34 inches; above this height (up to 80 inches), projections of 4 inches maximum are allowed. The Board has also editorially revised an exception that allows the latch side stop to protrude up to ⅝ inch in alterations (404.2.3 Exception). In ADAAG, this exception is limited to cases of ''technical infeasibility.'' The Board has removed this qualification in this and other exceptions for alterations as noted in section 202 above.

Section 404.2.4 specifies door maneuvering clearances which are consistent with ADAAG 4.13.6. However, ADAAG provides these specifications through illustration (Figure 25) and the revised guidelines, which provide all requirements in written text, use tables to provide this information (Tables 404.2.4.1 and 4042.4.2). Clarification is also provided for recessed doors. ADAAG Figure 25 requires that doors in alcoves provide clearance for a forward approach. This provision has led to questions about what constitutes an ''alcove.'' In 404.2.4.3, this requirement has been changed to apply specifically to ''recessed doors where the plane of the doorway is offset more than 8 inches from any obstruction within 18 inches measured laterally on the latch side of the door.''

Section 404.2.5 covers thresholds. A provision in ADAAG 413.8 that allows thresholds ¾ inch high maximum at exterior sliding doors has been removed because products are available that meet the ½ inch high maximum specified for all other doors. An exception that permits in alterations a ¾ inch maximum threshold if beveled on both sides has been retained.

In section 404.2.7, which covers door hardware, a minimum mounting height for door hardware (34 inches) has been added. This height corresponds with revisions to the required clear width at doors to clarify that limited projections into the clear width are acceptable above this height. The maximum height (48 inches) is consistent with ADAAG 4.13.9. The advisory committee also recommended an exception that would permit any location for locks used only for security purposes and not for normal operation. This would address certain doors that typically have locks located outside the specified reach range, such as doors without stiles that lock at the bottom edge. The Board has included an exception but has further refined its application to ''existing locks at existing glazed doors without stiles, existing overhead rolling doors or grilles, and similar existing doors or grilles that are designed with locks that are activated only at the top or bottom rail.'' The Board has limited this exception to existing doors or grilles because design solutions for accessible doors and gates are available in new construction.

Closing speed is addressed by section 404.2.8 and corresponds to ADAAG 4.13.10. The required minimum closing speed for door closers is generally consistent with ADAAG, although the values differ due to changes in the measuring points. This revision was recommended by the advisory committee for consistency with the ICC/ANSI A117.1 standard. This section also includes a new provision for spring hinges, which offer little opening resistance and closing forces in the 1 to 2 pounds of force range. The requirement specifies that such hinges be adjusted so as to close from an open position of 70 degrees no faster than 1.5 seconds.

Two new provisions are provided for door surfaces and vision lites. Section 404.2.10 requires that swing doors have a smooth surface on the push side that extends the full width of the door. This provision derives from the ANSI A117.1–1992 standard and is intended to permit wheelchair footrests to be used in pushing open doors without risking entrapment on the stile. Exceptions to this requirement are provided for certain types of doors, such as tempered glass doors without stiles. Section 404.2.11 requires that, where vision panels in or adjacent to doors are provided, the bottom of at least one glazed panel be no higher than 43 inches from the floor for access to people using wheelchairs or who are of short stature. This height permits hardware to remain at industry standard locations. The Board has added an exception for vision lites that are more than 66 inches from the floor or ground, measured to the lowest part.

Section 404.3 addresses automatic doors. As in ADAAG 4.13.12, full-powered, low-energy, and power-assisted doors are addressed, and the industry standards (ANSI/BHMA 156.10 and 156.19) are referenced. The revised guidelines, as indicated in section 105.2, reference the most recent version of these standards (1996). Requirements in ADAAG 4.13.12 for door opening speed and forces have been removed since they are addressed by the referenced standards. Other differences from ADAAG include:

- clarification that the required 32 inch minimum clear opening applies to both power-on and power-failure modes and that the clear width for automatic doors is based on the clear opening provided by all leafs when simultaneously in the open position (404.3.1);
- addition of a requirement that maneuvering clearances specified for swing doors be provided at power-assisted doors since such doors are manually operated (404.3.2);
- addition of a requirement that labels and warning signs for automatic doors meet requirements in section 703.4 for non-tactile signage (404.3.6); and
- addition of a requirement by the Board that the clear break out opening for swinging or sliding automatic doors be at least 32 inches in emergency mode so that an accessible route through them is maintained in emergencies (404.3.7).

405 Ramps

Requirements for ramps are based on those in ADAAG 4.8. Differences from ADAAG concern:

- removal of the requirement that ''the least possible [running] slope'' be used for any ramp, which is considered too vague from a compliance standpoint (the 1:12 maximum slope has been retained) (405.2);
- the maximum cross slope has been changed from 1:50 to 1:48 for consistency with model building codes (405.3);
- clarification is provided that changes in level other than the running and cross slopes are not permitted on ramp runs (405.4);
- clarification is added that the required clear width (36 inches minimum) is measured between the leading edge of handrails (405.5);
- clarification is provided that ramp landings cannot slope more than 1:48 or have any other change in level (405.7.1) and that ramp landings and door maneuvering clearances can overlap (405.7.5); and
- revision of the requirement for handrails so that it applies to any ramp with a rise greater than 6 inches but not to those with a horizontal projection

greater than 72 inches since it can discourage shallower slopes on short ramps (405.8).

In addition, further specification is provided for edge protection in section 405.9. This section is clearer than ADAAG 4.8.7 in recognizing surface extensions beyond handrails (12 inches minimum) and in recognizing guards, curbs, or barriers that prevent passage of a 4 inch diameter sphere at the ground or floor surface. Exceptions are provided to clarify that edge protection is not required on curb ramps with flared sides or returned curbs, at stair or ramp openings at landings, or at landings that have a maximum ½ inch drop-off within 10 inches horizontally of the minimum landing area.

406 Curb Ramps

Requirements for curb ramps in the revised guidelines are consistent with those in ADAAG 4.7. Revisions made to requirements for ramps, such as the clarification that changes in level other than the running and cross slope are prohibited, apply to curb ramps as well. ADAAG originally contained a requirement in 4.7.7 that curb ramp surfaces have a raised distinctive pattern of truncated domes to serve as a warning detectable by cane or underfoot to alert people with vision impairments of the transition to vehicular ways. This warning was required for curb ramps in the belief that their sloped surfaces removed the tactile cue provided by the straight drop off of a curb. In response to concerns about the specification, which was based on research, the availability of complying products, proper maintenance such as snow and ice removal, usefulness, and safety concerns, the Board suspended this requirement jointly with the departments of Justice and Transportation in July 1994. This action suspended the requirements for detectable warnings at curb ramps, hazardous vehicular areas, and reflecting pools until July 26, 1996, pending the results of a research project on the need for detectable warnings at these locations and at vehicular-pedestrian intersections in the public right-of-way.

The research project showed that vehicular-pedestrian intersections are very complex environments and that pedestrians who are blind or visually impaired use a combination of cues to detect intersections. The research project found that detectable warnings helped some pedestrians who are blind or visually impaired locate and identify curb ramps. However, the detectable warnings had only a modest impact on overall performance because, in their absence, pedestrians who are blind or visually impaired used other cues that might be available to detect the intersection. The research project indicated that there may be a need for additional cues at some types of intersections. The research project did not identify the specific conditions where such cues should be provided. The research project suggested that other technologies, which may be less costly and equally or more effective than detectable warnings, be explored for providing information about intersections.

In 1996, the Access Board and the departments of Justice and Transportation extended the suspension of the detectable warning requirements to July 26, 1998, to allow the Board's ADAAG Review Advisory Committee to conduct its review of ADAAG and to make recommendations for revising and updating the document. The suspension has been extended to July 26, 2001. The advisory committee recommended that the requirement for detectable warnings at platform edges in transportation facilities be retained. The advisory committee also made specific recommendations for permitting equivalent tactile surfaces, and technology or other means to provide equivalent detectability of the platform edge as an alternative to the truncated dome surface (see discussion at section 705). The advisory committee did not make any recommendations regarding the provision of detectable warnings at other locations within a site. The advisory committee suggested that the appropriateness of providing detectable warnings at vehicular-pedestrian intersections in the public right-of-way should be established first, and the application to other locations within a site should be considered afterwards. The Board has not included a requirement for detectable warnings within a site (*i.e.*, at hazardous vehicular areas or reflecting pools) or at curb ramps.

Section 406.7 addresses curb ramps provided at pedestrian islands which is consistent with ADAAG 4.7.11 and requires clear floor space at the top of ramps. The Board has added further detail on the width and location of this space relative to the curb ramp. A requirement in ADAAG 4.7.8 that curb ramps be located or protected so as not to be obstructed by parked vehicles has been removed because it is not always possible to prevent such obstruction solely through curb ramp design; operational factors, such as local traffic laws and their enforcement are also a key factor.

407 Elevators

Requirements for passenger elevators in ADAAG 4.10 are updated in section 407. Elevators must meet the industry safety code, ASME/ANSI A17.1, according to the most recent version (1993 with 1994 and 1995 addenda) as indicated in section 105.2. In addition to the types of passenger elevators recognized by ADAAG, the revised guidelines provide technical criteria for two new types of elevators destination-oriented elevators in 407.3 and limited-use/ limited-application (LULA) elevators in 407.4. A new subsection, 407.5, is also provided for existing elevators that are altered.

Section 407.2 covers passenger elevators currently addressed by ADAAG. A reference in ADAAG 4.10.1 to ''combination passenger and freight elevators'' has been removed because the type of elevator this was intended to cover is generally considered a ''passenger elevator'' by the ASME Elevator Safety Code, which does not address ''combination'' elevators.

A change is made to specifications for car size in section 407.2.8. ADAAG 4.10.9 recognizes two standard car configurations based on early industry conventions and provides a general performance standard requiring that users be able to enter the car, maneuver within reach of the controls, and exit from the car. The advisory committee considered these specifications too restrictive since they did not specify other standard configurations, such as the elongated hospital-type car, that are considered to meet the general performance standard. In Table 407.2.8, a greater variety of inner car dimensions are permitted. In addition to those specified by ADAAG, this table also permits cars with minimum inner dimensions of 54 by 80 inches and 60 by 60 inches. Other configurations that provide specified wheelchair turning space wholly within the car are also allowed. With respect to the clear width of the door opening, recognition of a ⅝ inch tolerance is provided to accommodate common industry sizes using ''hard'' metric equipment sizes.

Other revisions for standard elevators include:

- changing the height of call buttons from 42 inches ''centered'' to a range between 35 to 48 inches measured to each button centerline (407.2.2);
- adding requirements for the frequency (1500 Hz maximum) and decibel ranges (20 to 80 dBA) for hall call buttons (407.2.3) (while the advisory committee recommended that this be measured at the annunciator, the

Board is requiring measurement at the call button, closer to the user);

• specifying that the minimum size of visible hall signals be measured ''along the vertical centerline of the element,'' a Board change that takes into account triangular signals (407.2.3.2.2);

• revising requirements for tactile signs at hoistway entrances by specifying that the 60 inch height is measured to the baseline of the character (instead for the centerline) for consistency with other tactile signage requirements (407.2.4);

• adding a requirement that a tactile star be provided at the main entry level hoistway entrance, and removing language regarding the use of applied plates since it was considered advisory (407.2.4);

• adding requirements for car controls so that numbers are provided in ascending order and, in the case of multiple columns, read left to right (407.2.11.1);

• recognizing the use of keypads as an option to control panels (which provides an option in situations where it would be difficult to locate all buttons of a control panel within the specified reach range) and requiring that they follow the standard telephone keypad arrangement and have tactile characters (407.2.11.2);

• providing a maximum decibel level (80 dBA) for audible car position indicators (407.2.12.2);

• requiring car position indicators to provide automatic verbal announcements because of the ready availability of such indicators, and allowing audible signals only in slow-moving elevators having a maximum rated speed of 200 feet per minute (407.2.12.2); and

• requiring that ''essential'' information be presented in both tactile and visual form where instructions for the use of emergency communication equipment are provided (407.2.13).

Question 21: The Board is considering requiring a frequency band width of 300 to 3000 Hz for hall signals (407.3.2) in the final rule and seeks comment on such a requirement as it would affect intelligibility for people who are hard of hearing and others. Information on the availability of products and costs of such a requirement is requested.

Question 22: Section 407.2.13 addresses two-way emergency communication systems and requires that emergency signaling devices not be limited to voice communication. The Board seeks information and product literature on emergency communication devices and communication technologies that provide two-way communication in a manner accessible to people who are deaf and others who cannot use voice communication. The Board will consider adding a requirement for more interactive emergency communication devices that provide such access if they are presently available and if the costs and benefits can be demonstrated.

The advisory committee also recommended lowering the maximum height for control buttons from 54 to 48 inches, consistent with its recommendations for reach ranges generally. This recommendation is based on a report from the Little People of America indicating that a 54 inch height is too high for most people of short stature. As discussed at section 308 above, the Board has not included this requirement. The advisory committee recognized a potential adverse impact of a lower maximum height on elevators with panels that must have a large number of buttons in a limited amount of space and recommended an exception that would allow the 54 inch maximum height for elevators with more than 16 stops.

Section 407.3 provides technical requirements for destination-oriented elevators. These elevators are different from standard elevators in that passengers indicate their floor destination, typically using a keypad, when calling an elevator. The responding car is programmed by the time of arrival to the destination. This system allows more efficient utilization of elevators by reducing the number of stops per trip. The revised guidelines require that these elevators comply with the ASME/ANSI A17.1 safety standard and with most of the requirements for standard elevators in 407.2. Different specifications are provided for call buttons, hall signals, car controls, car position indicators, and hoistway entrance designations. Provisions specific to destination elevators require:

• keypads, where provided instead of call buttons, to have a standard phone keypad arrangement (407.3.1);

• different visible and audible car arrival signals for each car in a bank which correspond to those signals given when registering a call so users know which car is responding to their call (407.3.2);

• location of car controls, which typically include only emergency controls, within 35 to 48 inches from the floor (since fewer buttons are provided, the Board has retained the 48 inch maximum instead of the 54 inch maximum specified for other elevators) (407.3.3);

• visual display of each floor at which a car has been programmed to stop, and automatic verbal announcement of each floor the car stops at (407.3.4); and

• tactile identification of each car at the hoistway entrance so persons with vision impairments can identify the car responding to their call (407.3.5).

The revised guidelines also provide technical requirements for LULA elevators. This type of elevator is typically smaller and slower than other passenger elevators and is used for low-traffic, low-rise installations, including residential facilities. The advisory committee recommended that this type of elevator be allowed where a standard elevator is not required. Since this kind of elevator requires less space and costs less, the advisory committee reasoned that LULAs will provide a more viable option in providing vertical access in multi-story buildings not required to have an elevator. The technical requirements for these elevators are provided in section 407.4.

Where provided, LULAs would be required to comply with the applicable section of the safety code, ASME/ANSI A17.1, Chapter XXV. Most of the requirements are the same as those for other elevators except that LULAs are not subject to criteria for door timing, door delay, or car position indicators. Provisions that differ from those for other elevators concern doors, car size, and car controls. Low-energy power-operated swing doors are permitted as an alternative to sliding doors if they meet the ANSI/BHMA A156.19 standard and requirements in section 404 of this guideline. They are required to remain open for at least 20 seconds when activated. Sliding doors are subject to door operation requirements of other elevators. A smaller car size is permitted: 42 inches wide minimum and 54 inches deep minimum (with a 36 inch minimum width allowed for installations in existing facilities). Doors are required to be provided on the short dimension. While considerably smaller than other elevators, these dimensions are intended to approximate the maximum car size possible for this type of elevator. Car controls are subject to the same requirements as other elevators except that they must be installed on the side wall.

The revised guidelines provide more detail than ADAAG on the requirements for existing elevators that are altered. Section 407.5 provides requirements for other elevators that are altered if full compliance with 407.2 is not undertaken. Such elevators are subject to most of the requirements for new construction, but a variety of allowances are included in 407.5 to recognize the potential difficulty of bringing existing equipment into full compliance. In

section 407.5.4, smaller cars are permitted if they are at least 36 inches wide and 54 inches deep with a clear floor area of at least 16 square feet. The advisory committee recommended that a 48 inch minimum depth be permitted, but the Board considers the 54 inch minimum depth more appropriate in accommodating a wider range of mobility aids, including scooters with a long wheel base. This specification replaces provisions in ADAAG 4.1.6(3)(c) permitting smaller sized cars. This section also:

- does not require call buttons to be raised or flush, unless new buttons are installed (407.5.1);
- does not require existing hall signals to meet new construction requirements for frequency (1500 Hz maximum) or decibel levels (20 to 80 dBA), unless new signals are installed (407.5.2);
- allows existing hoistway swing doors that are manually operated or automatic if they provide a 32 inch minimum clear width and have a maximum 5 pounds opening force, but requires that power-operated car doors not begin to close until the hoistway door is closed (407.5.3);
- removes an exception in ADAAG 4.16(3)(c) that allows existing safety door edges instead of automatic door reopening devices which the advisory committee considered of little benefit (407.5.3);
- allows existing control panels not to comply where a fully-compliant panel is provided (407.5.5.4);
- allows car control buttons to be recessed and provides flexibility in the location of tactile markings at existing control panels but requires that new panels fully comply (407.5.5);
- allows existing car position indicators not to comply (407.5.6); and
- requires that accessible elevators be identified by the International Symbol of Accessibility unless all elevators in a building are accessible.

408 Wheelchair (Platform) Lifts

Requirements for wheelchair lifts are consistent with those in ADAAG 4.11 in specifying ground and floor surfaces, clear floor space, and operable parts. Like ADAAG, the revised guidelines require compliance with the safety code for elevators and escalators, ASME/ANSI A17.1, but references the most recent edition as indicated in section 105.2. The final rule will reference the ASME/ANSI A18.1 Safety Standard for Platform Lifts and Stairway Chairlifts if the new standard is published prior to the publication of the final rule. The revised guidelines provide additional specifications for lift doors and gates in section 408.2 that are not contained in ADAAG. These additional specifications are designed to facilitate unassisted entry and exit. Wheelchair lifts with doors or gates on opposing sides generally facilitate lift use by permitting a forward approach to both entry and exit doors or gates. The revised guidelines require lifts that do not provide this ''pass through'' to have low energy, power-operated doors or gates that meet the applicable requirements of the ANSI/BHMA A156.19 standard. As with LULA elevators, doors or gates are required to remain open for at least 20 seconds when activated.

409 Accessible Means of Egress

The advisory committee recommended revising the criteria for accessible means of egress to make them more consistent with model building codes and standards. These changes serve to provide more detail on the acceptable components of accessible means of egress. Section 409.1 recognizes that an accessible route complying with section 402 can be used as an accessible means of egress, except for wheelchair lifts, which are not permitted as part of accessible means of egress because they are not generally provided with standby power that would allow them to remain functional in emergencies when power is lost. New requirements are provided for the use of exit stairways and elevators that are part of an accessible means of egress when provided in conjunction with horizontal exits or areas of refuge meeting section 410. A horizontal exit is a fire-safety concept included in model building codes that in effect creates an area of refuge. For example, a story is divided into areas separated by a fire resistive wall. The fire door in the wall is the horizontal exit and, in the event of a fire, occupants can move away from the fire into the area that would be protected by the fire resistive wall (model code requirements are based on the assumption that fire will not occur in both areas simultaneously).

Under section 409.2, exit stairways can serve as part of an accessible means of egress if they contain an area of refuge or if they can be accessed from either an area of refuge or a horizontal exit. Such stairways must also meet the requirements for stairways in section 504 and, as required by ADAAG, have a minimum clear width of 48 inches between handrails. The requirements for exit stairways are not applicable to facilities not required to have areas of refuge (*i.e.*, those protected throughout by a supervised automatic sprinkler system and open parking garages) or to exit stairways that serve a single guest room. Exit stairways accessed from a horizontal exit are not required to provide the minimum 48 inch clear width.

While typical elevators are not designed to be used during emergency evacuation, there are elevators that are designed with standby power and other features according to the elevator safety standard that can be used for evacuation. The revised guidelines require such elevators as part of an accessible means of egress in buildings where accessible floors are four or more stories above or below the level of exit discharge (section 207.2). This is consistent with model codes. Section 409.3 provides the technical criteria for these elevators and requires standby power so that emergency or other authorized personnel can use the elevator for evacuation after the loss of primary electrical power. These elevators must meet requirements for emergency operation and signaling devices in the elevator safety code (ASME/ANSI A17.1, Rule 211). These elevators must be accessed from a complying area of refuge or a horizontal access except in facilities equipped throughout with a supervised automatic sprinkler system or open parking garages, which are exempt from the requirement for areas of refuge.

410 Areas of Refuge

The revised guidelines use the term ''areas of refuge'' instead of ''areas of rescue assistance'' and provides technical requirements that would replace those in ADAAG 4.3.11. The revised guidelines introduce some new requirements for areas of refuge and differ from ADAAG in not listing each type of space that can serve as an area of refuge. Requirements for location (410.2), construction (410.4), and smoke resistance (410.5) replace the space-specific criteria in ADAAG 4.3.11.1. Section 410.2 introduces a maximum travel distance to an area of refuge that is based on the travel distance permitted for the occupancy by the administrative authority. This section also clarifies that each area of refuge must have direct access to an exit stairway or evacuation elevator.

Under section 410.4, smoke barriers separating areas of refuge from the rest of the floor must have a minimum one-hour fire-resistance rating, and doors in the smoke barrier must have a minimum 20 minute fire-resistance rating. These requirements and others pertaining to doors and openings, including those for heating, ventilation, and air conditioning (HVAC) coincide with those in ADAAG as specified for areas of rescue assistance based on their

location. Section 410.5 is more direct than ADAAG in requiring all areas of refuge to be designed to prevent the intrusion of smoke. This requirement does not apply to facilities protected throughout (including areas of refuge provided although not required) by a supervised automatic sprinkler system. Consistent with ADAAG, and the model codes, special design requirements dealing with intrusion of smoke is not required for areas of refuge located in exit stair enclosures. A story-level landing within a fire resistance rated exit enclosure will provide a satisfactory area for staging evacuation assistance. Section 410.5 also specifies that where an elevator lobby serves as an area of refuge, the hoistway and lobby must comply with requirements for smoke-proof enclosures (unless the elevators are in an area of refuge formed by a horizontal exit or smoke barrier). This is consistent with ADAAG, but the revised guidelines recognize the use of horizontal exits or smoke barriers in this situation. Also, requirements in ADAAG 4.1.3.1(7) for activation, fire ratings, and pressure differentials where elevator lobbies serve as areas of refuge have not been included in the revised guidelines because they are extensively addressed by contemporary building codes.

Requirements for size (410.3), communication system (410.6), instructions (410.7), and identification (410.8) are consistent with ADAAG. Section 410.7 provides greater detail on the type of instructions required in areas of refuge. Instructions must include directions to other means of egress, urging people to use exit stairs if they can, information on evacuation assistance and how to summon it, and directions for using the required two-way communication system.

Question 23: Section 410.6 requires that emergency communication systems have visible signals in addition to audible signals so that limited communication access is provided for people who are deaf or hard of hearing. Use of two-way communication systems is recognized but not required. As with elevator communication systems, the Board seeks information and product literature on emergency communication devices and communication technologies that provide two-way communication in a manner accessible to people who are deaf and others who cannot use voice communication. The Board will consider adding a requirement for more interactive emergency communication devices that provide such access if they are presently available and if the costs and benefits can be demonstrated.

Chapter 5: General Site and Building Elements

Chapter 5 contains requirements for accessible parking and passenger loading zones, stairways, and handrails.

502 Parking Spaces

This section is substantively consistent with ADAAG 4.6, except for changes concerning identification of van spaces and accessible routes. Requirements in 502.6 for the identification of spaces have been revised by adding a specific mounting height (60 inches above the ground measured to the bottom edge of the sign); ADAAG 4.6.4 requires signs to be located so that they are not ''obscured by a vehicle parking in the space.'' In addition, the requirement that van spaces be designated as ''Van-accessible'' has been removed. The advisory committee recommended this action because this designation has been misinterpreted as reserving spaces solely for van users when in fact it was intended only to identify those spaces better suited for van use. A requirement in ADAAG that parked vehicle overhangs not reduce the clear width of connecting accessible routes has been removed as it is redundant with the requirement for clear width.

Other revisions have been made in sections 502.3 and 502.4 to clarify that:

- access aisles are to be marked;
- changes in level beyond the maximum 1:48 slope are not permitted for either the space or the access aisle; and
- the access aisle must be at the same level as the parking space.

Requirements for the location of accessible parking in ADAAG 4.6.2 have been relocated to Chapter 2 at 208.4 since these provisions contain scoping information.

503 Passenger Loading Zones

Requirements for passenger loading zones are based on those contained in ADAAG 4.6.6. Unlike the scoping provisions in 209, the technical criteria of this section have not been significantly changed. Requirements have been added in section 503.3 and 503.4 to clarify that:

- access aisles are to be marked;
- changes in level beyond the maximum 1:48 slope are not permitted for either the space or the access aisle; and
- the access aisle must be at the same level as the parking space.

504 Stairways

Two new provisions have been added to the requirements for stairs contained in ADAAG 4.9. In section 504.2, a riser height of 4 to 7 inches is specified, consistent with some model codes and the ICC/ANSI A117.1 standard. ADAAG requires a uniform riser height but does not specify a dimension. Section 504.4 permits an allowable slope up to 1:48 for tread surfaces to allow for drainage and prohibits changes in level on treads. ADAAG does not address tread slope.

505 Handrails

Requirements for handrails at ramps and stairs in ADAAG 4.9.4, 4.8.5, and 4.26 have been combined into one subsection in the revised guidelines. An exception in 505.2 from the requirement for handrails on both sides of aisle ramps has been expanded to include aisle stairs since the revised scoping for stairs is likely to cover stairs not covered by ADAAG. However, this exception has been limited to one handrail, whereas ADAAG currently exempts both handrails.

In sections 505.3 and 505.4, revisions have been made to clarify that handrails are not required to be continuous at aisle seating and that the handrail height is to be consistent along a stairway or ramp. In section 505.5, the 1½ inch knuckle clearance in ADAAG has been changed from an absolute to a minimum dimension. The advisory committee recommended this change because an absolute or maximum clearance is intended to prevent entrapment; this rationale was considered more pertinent to grab bars than to handrails. Also, some building codes require a clearance greater than 1½ inches. Another difference concerns specifications for gripping surfaces in section 505.6. The revised guidelines specify what is considered a ''continuous'' gripping surface by defining allowable interruptions by handrail brackets or balusters. Under this provision, surface interruptions are not considered obstructions if they obstruct no more than 20% of the handrail length; have horizontal projections beyond the sides of the handrail at least 2½ inches below the bottom of the handrail; and edges have a ⅛ inch minimum radius.

Many questions have arisen about the ADAAG specification in 4.26.2 for handrail diameter of 1¼ to 1½ inches (indicated in Figure 39 as the outside diameter) particularly in the use of pipe. Section 505.7 changes this range to 1¼ to 2 inches and clarifies its application to the outside diameter. The advisory committee pointed to studies that show a larger cross-section is more graspable and allows a stronger grip. This section also provides more specific guidance on acceptable alternatives to the specified circular cross-section. Non-circular

cross-sections are permitted that have a perimeter dimension between 4 to 6¼ inches and a cross-section diameter of 2¼ inches maximum. Section 505.10 covers handrail extensions and clarifies that they are not required at handrails in aisles serving seating where handrails are necessarily discontinuous.

Chapter 6 Plumbing Elements and Facilities

Chapter 6 provides technical requirements for plumbed fixtures and toilet and bathing rooms and replaces those for such elements and spaces in ADAAG 4.15 through 4.24.

Previously adopted amendments to ADAAG that provide alternate specifications for building elements designed for children's use are included in the revised guidelines. These specifications address drinking fountains, water closets, toilet compartments, lavatories and sinks. The provisions have been editorially revised to fit into the new format of the revised guidelines but remain substantively the same. As with the current ADAAG, these provisions are provided as exceptions to requirements that are based on adult dimensions. Use of the alternate specifications, while optional, will be driven where an element or space is designed specifically for children's use. The alternate specifications address clear floor space at drinking fountains (602.2), water closets and toilet compartments (604.1, 604.9), grab bar heights (609.3), and knee clearances at lavatories and sinks (606.2).

ADAAG 4.1.3(11) permits toilet rooms provided for the use of occupants of specific spaces, such as the private toilet room for the occupant of a private office, to be ''adaptable.'' Adaptable refers to design that allows certain access features, such as grab bars, to be added or altered after construction when needed to accommodate a person with a disability. The revised guidelines retain this provision but provide more guidance on the type of spaces covered and on what constitutes ''adaptability'' throughout Chapter 6. Instead of relying on a general scoping provision as in current ADAAG, the revised guidelines provide a series of exceptions to technical criteria for doors to toilet and bathing rooms (603.2.3), toilet seat heights (604.4), grab bars at water closets (604.5), bathtubs (607.4), and showers (608.3), and lavatory knee clearance and counter heights (606.2, 606.3). These exceptions are applicable to toilet and bathing rooms ''for a single occupant, accessed only through a private office and not for common or public use.''

602 Drinking Fountains and Water Coolers

Requirements for drinking fountains and water coolers derive from those in ADAAG 4.15. Like ADAAG, a forward approach is required at wall- or post-mounted, cantilevered units in section 602.2. A parallel approach is permitted at other types of units, such as those that are floor-mounted.

Question 24: A forward approach to drinking fountains provides easier access than a parallel approach. Should a forward approach, which includes knee and toe clearances below the unit, be required at all drinking fountains for adults that must be accessible? Such a requirement may be included in the final rule.

It is also specified that clear floor space for either a forward or parallel approach ''be centered on the unit,'' a stipulation not contained in ADAAG but that is consistent with the intent of the clear floor space requirement for a forward approach. ADAAG 4.15.4 requires that controls meet operation requirements and be mounted at the front of the unit or on the side near the front edge. The revised guidelines require operable parts to meet section 309, which not only covers the operation requirements but also requires location within the applicable forward or side reach range.

ADAAG 4.15.3 requires the spout to be at the front of the unit. Section 602.5 is more specific on the spout location and requires the location based on the approach provided; no more than 5 inches from the front edge (including bumpers) and at least 15 inches from the vertical support at units with a forward approach and 3½ inches maximum from the front edge (including bumpers) at units providing a side approach. Additional specification is provided for the water flow based on requirements in the ICC/ANSI A117.1 standard. Like ADAAG 4.15.3, the water flow must be at least 4 inches high to allow insertion of a cup or glass under the flow. ADAAG is more specific with respect to round or oval bowls, which are required to have spouts positioned so that the water flow is within 3 inches of the front edge of the unit. Section 602.6 of the revised guidelines specifies the maximum angle of the water flow measured horizontally relative to the front face of the unit (30 degrees where the spout is located within 3 inches from the front and 15 degrees where the spout is located within 3 to 5 inches from the front).

The advisory committee recommended removing access requirements for people who have difficulty bending or stooping, in part because ADAAG does not provide any technical criteria for such access. The Board has retained a requirement for standing access at a portion of units and has provided in section 602.7 a requirement for the spout height (39 to 43 inches measured from the floor or ground to the spout outlet). This range is based on the height of certain drinking fountain models currently available in the marketplace.

603 Toilet and Bathing Rooms

This section contains requirements for toilet and bathing rooms found in ADAAG 4.22 and 4.23 with several substantive revisions. Like ADAAG, section 603.2.3 prohibits doors from swinging into the clear floor space required for any fixture. However, an exception from this requirement has been provided for individual-use toilet and bathing rooms where clear floor space for an occupied wheelchair is provided beyond the arc of the door swing. The advisory committee felt that the rationale for the ADAAG requirement is most relevant to multi-user toilet or bathing facilities and that in single-user facilities, wheelchair space beyond the arc of the door swing is sufficient. This exception in no way affects the requirement in 603.2.1 for wheelchair turning space. That requirement is applicable to single- and multi-user toilet rooms. For those facilities designed to serve a single occupant accessed only through a private office and not for public or common use, a second exception allows the door to swing into fixture clear floor space where the swing of the door can be reversed. Section 603.4 provides a new requirement that coat hooks and fold-down shelves, where provided, be accessible. Coat hooks must be within the accessible reach ranges specified in section 308, and fold-down shelves are to be mounted from 40 to 48 inches above the floor. (This requirement is also restated for toilet compartments at 604.8.3.) In addition, a requirement for the height of mirrors in the ADAAG section on lavatories (4.19) has been relocated to this section at 603.3.

604 Water Closets and Toilet Compartments

This section integrates requirements in ADAAG 4.16 and 4.17 for water closets and toilet compartments. Requirements in 604.2 through 604.7 apply to water closets, including those located in toilet compartments, and requirements in 604.8 are specific to toilet compartments. Section 604.9 provides criteria for toilet compartments designed according to children's

dimensions as an optional alternative to the requirements based on adult dimensions in section 604.8.

Substantive changes are proposed for the location of water closets and clear floor space at water closets. Section 604.2 specifies that a water closet centerline be located 16 to 18 inches from the adjacent side wall. This differs from ADAAG which requires an 18 inch absolute dimension in 4.16.2 (Figure 28). The advisory committee considered the absolute dimension overly restrictive and pointed to early studies that indicate closer placement is acceptable. Section 604.3 requires that the clear floor space at water closets be at least 60 inches wide and 56 inches deep and prohibits any other obstruction or fixture other than the water closet, grab bars, and tissue dispensers from overlapping this space. ADAAG Figure 28 specifies the same clear floor space dimension but allows lavatories on the same plumbing wall to be mounted as close as 18 inches to the centerline of the water closet. In this case, ADAAG specifies clear floor space at the water closet 48 inches wide minimum (instead of 60 inches) and, in the case of a forward approach, at least 66 inches deep (instead of 56 inches). While the clear floor space at the lavatory ensures additional space near the water closet, the closer placement of the lavatory effectively prohibited space for side transfers to the water closet. In practice, the lavatory cannot be placed as close as shown in ADAAG Figure 28 due to the rear grab bar which must be at least 36 inches long unless the grab bar overlaps the lavatory. Also, the advisory committee noted that the lavatory should not be used to support the weight of a person transferring since lavatories are not required to provide structural support, and they do not provide adequate hand holds. For these reasons, the advisory committee recommended that fixtures, including lavatories, not be permitted to overlap the 60 inch wide space at water closets. This will allow space for side transfers at all accessible water closets. Under this change, the space saved by locating a lavatory closer to the water closet on the same plumbing wall could only be accomplished by recessing the lavatory so that it does not overlap the clear floor space at the water closet.

Revisions are made to requirements for the rear grab bar, flush controls, and toilet paper dispensers. Consistent with ADAAG 4.16.4, the rear grab bar must be at least 36 inches long. However, section 604.5.2 permits a shorter grab bar of 24 inches if wall space is not available for a 36 inch grab bar. This provision will accommodate a recessed lavatory on the plumbing wall and thereby recover space in the toilet room. Section 604.6 requires flush controls to be within the accessible reach ranges (48 inches maximum for a forward approach) instead of the 44 inch maximum permitted by ADAAG 4.16.5. With respect to toilet paper dispensers, ADAAG 4.16.6 specifies a minimum height of 19 inches. Section 604.7 changes this dimension and provides further detail on the location. Dispensers must be 7 to 9 inches in front of the water closet (measured to the dispenser centerline) and must be between 15 and 48 inches above the floor and mounted so that there is a minimum clearance of 1½ inches below or 12 inches above the side grab bar. Most extra large dispensers do not meet these requirements because they block use of grab bars or are too low or too high to comply with ADAAG reach ranges. Toilet paper dispensers are subject to requirements for operable parts in 309.4 (operable with one hand without grasping, pinching, twisting of the wrist, or a force of more than 5 pounds).

Section 604.8 provides requirements for toilet compartments. Section 604.8.1 covers wheelchair accessible compartments, and section 604.8.2 covers compartments providing access for people who are ambulatory. These requirements are based on those in ADAAG 4.17, 4.22.4, and 4.23.4. ADAAG 4.17.3 permits alternate smaller compartment designs in alterations where providing a standard wheelchair accessible stall is not technically feasible. These designs permit a considerably narrower compartment (36 or 48 inches instead of 60 inches minimum) in exchange for more depth (an additional 10 inches). These alternate designs are not included in the revised guidelines for two reasons. The advisory committee did not believe the alternate stall designs provide sufficient wheelchair access because they fail to accommodate the most common diagonal or side transfers. In addition, the Board has sought to limit alternate specifications based on technical infeasibility as discussed at section 202 above.

Section 604.8 states that toilet compartments with more than one plumbing fixture are required to comply with requirements in section 603 for toilet rooms to ensure access to each fixture. For example, if a lavatory is located within a compartment, it would have to be installed so as not to overlap the minimum 60 inch wide clear floor space at the water closet and wheelchair turning space would be required within the compartment. Revisions to the requirements for water closets in section 604.2 through 604.7 apply to those located in toilet compartments as well.

Wheelchair accessible compartments are based on the requirements for ''standard'' stalls in ADAAG 4.17 and Figure 30. Requirements for doors and toe clearance have been slightly modified. Section 604.8.1.2 requires doors to be self-closing and to have accessible door pulls on both sides of the door near the latch. These requirements are not provided in ADAAG and have been added to facilitate access. ADAAG 4.17.4 specifies toe clearance at least 9 inches high below a side and the front partition unless the stall is deeper than 60 inches. Section 604.8.1.4 addresses the minimum depth for this clearance (6 inches beyond the compartment-side face of the partition) which is consistent with other requirements for toe space. This section permits the toe space to be added to the compartment if partitions provide less than 9 inches clearance.

Requirements in 604.8.2 for compartments providing ambulatory access are consistent with requirements in ADAAG 4.22.4 and 4.23.4 except for several changes. With respect to size, the section 604.8.2.1 of the revised guidelines specifies a minimum depth (60 inches) whereas ADAAG does not. Consistent with requirements for wheelchair accessible compartments, section 604.8.2.2 requires that compartment doors have an accessible pull on both sides near the latch. Also, compartment doors are prohibited from swinging into the minimum required compartment area, which may permit an inward swinging door where the compartment depth is sufficiently increased; ADAAG requires that such compartments have outward swinging doors.

605 Urinals

Requirements for urinals are based on those in ADAAG 4.18. ADAAG requires an ''elongated'' rim of an unspecified dimension. The advisory committee considered this requirement as indistinguishable from standard rims and recommended its removal. The Board instead has sought to clarify this provision by specifying a minimum dimension of 13½ inches, measured from the outer face of the urinal rim to the back of the fixture. A requirement permitting a minimum clearance between urinal shields of 29 instead of 30 inches where shields do not extend beyond the rim has been removed.

606 Lavatories and Sinks

The revised guidelines combine into one section technical criteria for

lavatories in ADAAG 4.19 and for sinks in ADAAG 4.24. Provisions for clear floor space in 606.2 revise several ADAAG requirements. The requirement for a minimum 29 inch high apron clearance has been removed because without a specified depth the effectiveness of this requirement is questionable. This change also makes the provision consistent with knee clearance requirements for other elements, such as tables and counters. Clarification has been added that the dip of the overflow can project into the knee and toe clearances since the effect on access is considered negligible. Clarification has been added, consistent with the Board's interpretation of ADAAG, that the required knee and toe clearance need only be applied to one bowl of a multi-bowl sink. The Board has removed a specification for sinks in ADAAG 4.24.4 for a maximum bowl depth of 6½ inches since required knee clearances and counter heights effectively govern this dimension. ADAAG requires that lavatory and sink faucets meet requirements for operable controls in ADAAG 4.27.4 and lists acceptable types (*e.g.,* lever, push, electronically controlled). Section 606.4 requires compliance with 309, which not only covers operating characteristics but also accessible reach ranges. References to acceptable faucet types, which are non-mandatory in nature, have been relocated to an advisory note.

607 Bathtubs

This section corresponds to requirements in ADAAG 4.20 with several revisions concerning clear floor space and shower spray units. Section 607.2 covers clear floor space and requires that it extend at least 12 inches beyond permanent seats provided at the head end of the bathtub. ADAAG Figure 33(b) does not require this additional space and permits the clear floor space to extend only to the end of the seat. This requirement was added so that sufficient space is available for persons using wheelchairs to more properly align themselves with the tub seat for transfer. In section 607.6, the minimum length of the hose for the shower spray unit has been reduced one inch to 59 inches to accommodate metric-based industry conventions. The Board has added a requirement that shower spray units have a water on/off control for greater access. In this section, clarification has been added that where a vertical bar is used to provide an adjustable-height shower unit, the bar must be installed so as not to obstruct the use of grab bars. Similar revisions to the requirements for shower spray units are provided for shower compartments as well in section 608.6.

608 Shower Compartments

Like ADAAG 4.21, this section provides requirements for transfer-type showers and for roll-in showers. ADAAG Figure 57 shows a specific type of roll-in shower equipped with a seat that is required in a portion of accessible guest rooms in transient lodging facilities. This design is incorporated into section 608 and can be used in other types of facilities as well to provide an accessible shower compartment.

Substantive changes have been made concerning water temperature, shower spray units, and curbs. Section 608.6 provides a new requirement for thermal shock protection (to 120 degrees Fahrenheit maximum). ADAAG 4.21.6 provides an exception that fixed shower heads 48 inches high maximum can be used instead of the required hand held unit in ''unmonitored facilities where vandalism is a consideration.'' This exception has been removed due to a lack of clarity on the types of facilities that qualify for this exception. Section 608.7 permits curbs up to ½ inch provided that those above ¼ inch are beveled with a slope of 1:2 maximum. This differs from ADAAG 4.21.7 which permits such a curb (although without beveling) at transfer-type showers but not at roll-in showers. The advisory committee felt that a beveled curb will allow access into roll-in showers while permitting a change in level that can help keep water in the compartment, a common concern with roll-in showers. This provision is consistent with requirements for changes in level in section 303.3.

Other revisions have been made to clarify that:

- where multiple grab bars are used instead of a single continuous grab bar from wall to wall, they must be installed at the same height (608.3);
- shower seats can be attachable or integral (608.4);
- controls, faucets, and shower spray units must be installed on the rear wall at showers with seats so that they are within reach from the seat (608.5); and
- shower spray units in transfer-type showers must be 15 inches maximum from either side of the centerline of the seat (608.5).

609 Grab Bars

Grab bar specifications are consistent with those in ADAAG 4.26, including required mounting heights at toilet and bathing fixtures shown in ADAAG Figures 29, 30, 34, and 37. Like ADAAG 4.26.2, a diameter between 1 and 1½ inches is required, but section 609.2 provides further specifications for allowable shapes providing an equivalent gripping surface: a 2 inch maximum cross-section dimension, a perimeter dimension between 4 and 4–11/16 inches, and edges with a ⅛ inch minimum radius. This section also provides a minimum clearance of 15 inches above grab bars (although a 1½ inch clearance is allowed between grab bars and shower controls, shower fittings, and other grab bars). Consistent with the ICC/ANSI A117.1 standard, clarification is provided in section 609.6 that grab bars can be installed in any manner that provides a gripping surface at the specified locations and that does not obstruct clear floor space.

610 Seats

Requirements for bathtub and shower seats are based on ADAAG requirements in 4.20.3 and 4.21.3. Section 610.2 addresses bathtub seats and requires removable seats to be 15 inches deep minimum to 16 inches deep maximum and permanent head-end seats to be 15 inches deep minimum. A height of 17 to 19 inches is required. This differs from ADAAG which does not specify a width for removable seats or a height, and requires an absolute dimension of 15 inches for head-end seats.

Section 610.3 covers shower seats and allows a rectangular shaped seat in addition to the L-shaped seat specified in ADAAG Figure 36. Rectangular seats, like removable tub seats, must be 15 inches deep minimum to 16 inches deep maximum. This section provides more specification than ADAAG for the size of L-shaped seats. ADAAG Figure 36 provides maximum dimensions for this type of seat. The revised guidelines provide minimum dimensions consistent with the ICC/ANSI A117.1 standard. A specification also has been added requiring that the seat extend from the back wall to a point within 3 inches of the compartment entry or seat wall width to reduce problems from water infiltration. The maximum distance of the seat from the seat wall has been increased from 1½ to 2½ inches.

Question 25: The revised guidelines more clearly permit a choice between rectangular and L-shaped seats for transfer and roll-in shower stalls. Is one shape more usable and accessible than the other?

611 Laundry Equipment

New requirements are provided for washing machines and clothes dryers, equipment ADAAG does not address. These requirements are based on the ICC/ANSI A117.1 standard. This section

requires clear floor space for a parallel approach (611.2), accessible operable parts (611.3), and the height of appliance openings: 34 inches maximum above the floor for top-loading machines and between 15 to 34 inches for front-loading machines (611.4).

Chapter 7: Communication Elements and Features

This chapter provides technical criteria for communication elements such as fire alarms, signs, telephones, assistive listening systems, and automatic teller machines (ATMs) and fare machines. Extensive revision of requirements is proposed for these elements, particularly fire alarm systems, signs, and ATMs and fare machines.

702 Fire Alarm Systems

This section is vastly different from ADAAG 4.28 in providing updated and more detailed criteria for the visual component of fire alarm systems. The advisory committee based its recommendations on information developed by a coalition of organizations representing people who are deaf or hard of hearing or who have epilepsy, the fire alarm industry, and Underwriters Laboratories, Inc. (UL). The recommendations represent the goal of updating specifications for alarms to improve protection of people who are deaf or hard of hearing while minimizing the effect on persons with photosensitive epilepsy. Through coordination with the National Fire Protection Association (NFPA) and ANSI, which were represented on the advisory committee, the proposed criteria are virtually identical to updated requirements in the NFPA 72 (1996) and the ICC/ANSI A117.1 standards.

Specifications for audible alarms in ADAAG 4.28.2 have been revised as well. The maximum sound level for alarms is reduced from 120 to 110 decibels as more appropriate and to guard against tinnitus.

Question 26: ADAAG does not address the frequency of audible alarms. The Board requests information on the optimal frequency range for people who are hard of hearing. Responses should include, where possible, supporting data indicating the benefit to people who are hard of hearing and others.

Requirements for visual alarms are provided in section 702.3. In section 702.3.1, the maximum flash rate has been reduced from 3 Hertz (Hz) to 2 Hz. Research conducted by the coalition found a minimum flash rate of 1 Hz to be the slowest rate that does not significantly increase reaction time of people who are deaf or hard of hearing. Flash rate is considered the primary factor affecting persons who are photosensitive. A 1 Hz flash rate is considered sufficient; an allowance up to 2 Hz is specified to allow a tolerance for manufacturing and field conditions. New language clarifies the parameters over which an appliance must meet the specified flash rate since changes in voltage can affect the flash rate.

New criteria are provided in section 702.3.2 for light dispersion which address the required percentage of rated intensity at various angles from the visual appliance. The requirements, provided in table form (Tables 702.3.2.1 and 702.3.2.2) distinguish wall- and ceiling-mounted appliances and are based on UL 1971, Signaling Devices for the Hearing Impaired. ADAAG does not provide criteria for dispersion of visual alarms. Section 702.3.4 addresses the required location of appliances. Wall-mounted appliances are required to be 80 to 96 inches above the floor (measured to the bottom of the appliance), except that appliances that are part of a smoke detector are to be located 4 to 12 inches from the ceiling (measured to the top of the smoke detector). These revisions are consistent with NFPA 72, including the mounting height for smoke detectors. ADAAG 4.28.3 does not specifically address visual appliances integrated with smoke detectors and specifies an absolute height of 80 inches (or 6 inches below the ceiling, whichever is lower). However, photometric calculations of lamp intensity for mounting heights of 80 and 96 inches show only nominal differences and are practically equivalent. Further, the ADAAG height specification is considered too restrictive. Ceiling-installed appliances are required to be 30 feet maximum above the floor.

Section 702.3.4 provides new requirements under which the minimum lamp intensity is determined by the size of the area served. These specifications serve to minimize the number of appliances in a room or space in order to prevent the cumulative flash rate of multiple strobes, which can affect people with photosensitive epilepsy. Multiple appliances are allowed only where coverage by a single appliance is not possible due to room size, shape, construction or furnishings. In this case, criteria are provided to prevent the effective flash rate from posing a hazard: placement of two appliances on opposing walls, synchronization of flashes, or minimum separation between appliances (55 feet in any 135-degree field of view) in rooms 80 feet by 80 feet or greater. The minimum required effective intensity is specified in table form (Tables 702.3.4.2 and 702.3.4.3) for wall-and ceiling-mounted appliances based on the size of the covered area and the permitted number of appliances. These specifications are based on NFPA 72 criteria. The minimum intensities are based on the rule that illumination from a light source will vary in proportion to the square of the distance to the light source. Combined with the dispersion requirements, a minimum 0.0375 lumens per square foot is provided throughout the covered areas. As such, appliances with an effective intensity of 15 candela are allowed in small spaces. ADAAG 4.28.3 requires a minimum 75 candela with a general maximum separation of 50 feet. The criteria of the table are based on location of wall-installed appliances at the midpoint of the longest side of the area served and the location of ceiling-installed appliances at the center point of the covered area. Alternate specifications for the minimum effective intensity are provided for appliances located elsewhere.

Section 702.3.5 provides revised requirements for the spacing and intensity of appliances located in corridors. Corridors 20 feet or less in width are required to have appliances with a minimum effective intensity of 15 candela spaced from 50 to 100 feet apart and located no more than 15 feet from each end of the corridor. Interruptions in the concentrated viewing path, such as elevation changes, are to be treated as the end of the corridor. Corridors greater that 20 feet in width are treated like other spaces. This differs from ADAAG 4.28.3 which specifies a maximum corridor spacing of 50 feet and a minimum effective intensity of 75 candela. The intensity and greater spacing are permitted because the linear nature of corridors allows a direct view of appliances and the spacing requirements serve to minimize the number of appliances within view for the benefit of people who are photosensitive.

Like ADAAG 4.28.4, criteria specific to visual alarms in guest rooms are provided. Significant changes have been made. ADAAG technical requirements for ''auxiliary'' alarms in effect permit use of portable types of alarms. Use of portable devices have proven unsatisfactory in that the responsibility for installing such devices has fallen to guests. Persons needing these devices also do not have the benefit of knowing whether the device is ready to function properly. Section 702.3.6 revises the criteria for guest room applications to

require permanent installation of visual alarms. Visual alarms activated by smoke detectors and the building fire alarm system, where provided, are required, and signaling must be supervised. One appliance can be used for activation by both smoke detectors and the building alarm system so long as the building alarm system is not activated by the smoke detector. This interconnection has not been embraced by the fire alarm industry due to technical differences between the two systems. However, this interconnection is only permitted where smoke detector activation does not trigger the building alarm system. Greater detail is also provided on the location of appliances. ADAAG 4.28.4 requires the signal to be ''visible in all areas of the unit.'' The revised guidelines, consistent with NFPA 72, specifies placement and intensity considered necessary to awake sleeping persons. Appliances must be no more than 16 feet from the location of the head end of the bed, measured horizontally. The Board has added clarification that appliances must be directly or indirectly visible in all parts of the sleeping room or suite. Appliances must have minimum effective intensity of 110 candela (if more than 2 feet below the ceiling) and 177 candela (if less than 2 feet below the ceiling). ADAAG requires a 75 candela minimum. The increased candela requirements are considered necessary to awaken people asleep, with an even greater increase provided for appliances closer to the ceiling.

703 Signs

The technical section on signs, like the section on alarms, represent significant departures from ADAAG. This section provides more detailed requirements for signs than ADAAG 4.30. The technical criteria proposed were developed by the ANSI A117 Signage Task Force. The advisory committee recommended adoption of the task force's requirements with some modifications. The task force sought to update requirements for signs to improve access for the widest range of users and to provide specifications that were clear, direct, and less likely to be misinterpreted. While striving to prohibit undesirable design characteristics and to make more specific what constitutes accessible signs, the task force also wanted to provide requirements in a way that would allow considerable design flexibility.

Requirements are provided for signs read by touch and for signs read visually. Scoping provisions in section 216 require permanent designation of permanent rooms and spaces to meet requirements for both tactile and visual access. This is a substantive change from ADAAG 4.1.3(16) which requires that such signs comply mainly with specifications for tactile access only. The signage task force considered this requirement insufficient for visual access. Section 703 requires both types of access but allows a choice: permanent signs can comply with section 703.2 which provides requirements for both tactile and visual access achievable in one sign or access can be provided separately through two signs, one that is tactile in accordance with 703.3 and one that is visual in accordance with 703.4. There are some differences between the requirements for combined tactile-visual signs and those provided separately, which represent slight compromises in the desired level considered necessary for signs providing both tactile and visual access. In either case, tactile signs are required to contain Braille complying with 703.5, and pictograms, where required to be tactile, must meet requirements in 703.6.

Signs that provide direction to, or information about, spaces or facilities, are subject to the requirements in section 703.4 for visual access, which is consistent with ADAAG 4.1.3(16). Required symbols of access are provided in section 703.7.

Requirements in 703.2 for signs providing both tactile and visual access specify:

- A non-glare finish and light-on-dark or dark-on-light contrast between characters and their background (703.2.1);
- Tactile characters raised at least 1/32 inch with a minimum 3/8 inch separation from raised borders or other decorative elements where provided (703.2.2);
- Tactile characters must be upper case, sans serif, 5/8 to 2 inches high, and meet requirements for character width and stroke thickness (703.2.3);
- Minimum spacing between characters (703.2.4) and lines of text (703.2.5); and
- Sign mounting height (703.2.6) and location (703.2.7).

The specifications for finish and contrast are similar to those in ADAAG 4.30.5 except that references to ''eggshell'' and ''matte'' as non-glare finishes have been removed because this is not always the case. For example, matte stainless steel is not generally considered ''non-glare.''

Requirements in 703.2 for tactile characters, character forms, and character and line spacing differ from ADAAG 4.30 in that:

- The minimum 3/8 inch separation between raised characters and borders or other decorative elements is new and is designed to limit interference with tactile reading (703.2.2);
- Only sans serif fonts are allowed and italic, oblique, script and other highly decorative styles are clearly prohibited (ADAAG allows ''simple'' serif forms; a term without specific meaning in the industry that has been removed for both clarity and improved access) (703.2.3.2);
- The specified character width of 55% to 110% of the character height is slightly different than the 60% to 100% ADAAG requires, but the characters specified for determining the new proportions (upper case ''O'' for width and upper case ''I'' for height), which are based on industry convention, make the effect of this change negligible (703.2.3.3);
- The character height is based on the upper case ''I'' instead of the upper case ''X'' ADAAG specifies (703.2.3.4);
- A character (the upper case ''I'') is specified for determining stroke thickness (703.2.3.5);
- The maximum stroke thickness has been reduced from 20% to 15% of the character height since thinner strokes are easier to read tactually (703.2.3.5);
- More specific guidance is provided for the stroke thickness of raised characters with beveled or rounded cross sections in recognition that they are perceived visually by the full (*i.e.*, base) dimension and tactually by the top dimensions (ADAAG requirements for stroke thickness do not apply to raised characters) (703.2.3.5); and
- Specifications for character spacing (1/8 to 3/8 inches), with additional guidance for beveled or raised characters, and for line spacing (135% to 170% of character height) are new and address both visual and tactual legibility (703.2.4 and 703.2.5).

There are changes in the mounting height and location of signs. Characters are required to be installed between 48 and 60 inches high measured from the baseline of characters. ADAAG 4.30.6 specifies tactile signs to be centered at 60 inches above the floor, a specification that was considered inadequate because it does not regulate the location of characters and can permit characters located outside the proper reach range. Like ADAAG, tactile signs are required on the latch side of doors or, if no wall space is available, on the nearest adjacent wall. An exception is provided for signs located on the push side of doors that have closers but that do not have devices that hold the door open. The revised guidelines requires that signs be located

on the right side at double doors, a more uniform location that can make them easier to locate tactually. Clear floor space of 18 by 18 inches minimum centered on the sign is required beyond the arc of the door swing, which clarifies the requirements in ADAAG 4.30.6 that signs be located so one can ''approach within 3 inches of signage without encountering protruding objects or standing within the swing of a door.''

Where separate tactile and visual signs are provided to convey the same information, the requirements for tactile-only signs in section 703.3 are different in several respects:

- There are no requirements for finish and contrast;
- A smaller character height of ½ to ¾ inches is required (instead of ⅝ to 2 inches as specified for combination signs and by ADAAG) because it is believed that smaller characters are easier to read tactually (703.3.2.4);
- Only a maximum stroke width (15%) is specified because information indicates that the thinnest possible stroke is preferred by people who read tactually (703.3.2.5); and
- Closer character spacing of ⅛ to ¼ inches is required as preferable for tactual reading (spacing up to ⅜ inches is allowed for combination tactile-visual signs) (703.3.3).

Visual signs provided separately from tactile signs are held to different criteria considered optimal for visual legibility. Under section 703.4, these signs are subject to the same requirements for finish and contrast, character width, and line spacing. Criteria for raised letters, including mounting location, do not apply. Requirements for character forms and spacing, line spacing, and mounting height are considerably different:

- Lower case characters are permitted, as in ADAAG, because words in all upper case are considered difficult to read visually (703.4.2.1);
- ''Conventional'' character styles are specified, which can include fonts with serifs because serifs do not necessarily reduce visual readability, although italic, oblique, script and highly decorative forms are prohibited (ADAAG does not specify the style of non-tactile characters) (703.4.2.2);
- A range for the minimum character height of ⅝ inch to more than 3 inches is specified in Table 703.4.2.4 according to sign height and the viewing distance, information much more detailed than ADAAG 4.30.3, which requires characters to be ''sized according to the viewing distance'' although a 3 inch minimum is specified for signs 80 inches or more above the floor (703.4.2.4);
- The maximum character stroke thickness (30% of the character height) is greater than that specified for tactile signs (15%) or in ADAAG (20%) (703.4.2.5);
- Character spacing between 10% to 35% of the character height differs from the spacing for tactile signs (703.4.3); and
- A minimum mounting height of 40 inches is required, which differs from the height of tactile signs and from ADAAG which does not address the height of visual signs (703.4.5).

Consistent with ADAAG, tactile signs must contain Grade II Braille. Section 703.5 differs from ADAAG 4.30.4 by providing specific criteria for Braille, including dot height and base diameter, dot and cell separations (Table 703.5), location (below raised text), minimum spacing from raised characters (¼ inch) and from raised borders (⅜ inch), and the height from the floor (40 to 60 inches measured from the baseline of Braille cells). Requirements for pictograms in 703.6 and required symbols of accessibility in 703.7 are consistent with corresponding provisions in ADAAG 4.30.4 and 4.30.7.

704 Telephones

This section provides requirements for wheelchair access, volume controls, and TTYs. Substantive differences from requirements in ADAAG 4.31 concern volume controls, hearing aid compatibility, and TTYs.

Section 704.3 requires volume controls that provide a gain up to at least 20 decibels and an intermediate gain of 12 decibels, and have an automatic reset. ADAAG 4.31.5 requires a gain between 12 to 18 decibels, which can be greater if an automatic reset is provided. The advisory committee recommended increasing the gain to 20 decibels and to require an automatic reset. The Board has revised the requirement for consistency with accessibility guidelines the Board issued under section 255 of the Telecommunications Act of 1996, which provides a similar requirement for other types of phones. In rulemaking on the Telecommunications Act Accessibility Guidelines, persons who are hard of hearing reported having trouble using public pay telephones because of inadequate receiver amplification levels. Many comments to the docket supported adjustable amplification ranging from 18–25 decibels of gain as proposed in that rulemaking. However, several telephone manufacturers cited the National Technology Transfer and Advancement Act of 1996, which requires the Federal government to make use of technical specifications and practices established by private, voluntary standards-setting bodies, wherever possible. The ICC/ANSI A117.1–1998 standard requires certain public pay telephones to provide 12 decibels of gain minimum and up to 20 decibels maximum and that an automatic reset be provided. In recognition of the National Technology Transfer and Advancement Act, this amplification level was specified in the Telecommunications Act Accessibility Guidelines even though information was received in that rulemaking indicating a gain of 25 decibels is not a problem for current telephone technology. The requirement in section 704.3 of the revised guidelines is consistent with both the ICC/ANSI A117.1 standard and the Telecommunications Act Accessibility Guidelines. Under the Telecommunications Act, the Board intends to publish a market monitoring report. Should this market monitoring report show that persons who are deaf or hard of hearing continue to report having trouble using telephones because the level of amplification is not high enough, the Board may revisit this issue in the future.

Question 27: The Board seeks information from pay telephone manufacturers and providers on the time frame necessary to produce products that meet the proposed specifications for volume control.

Question 28: Mute features on public pay telephones can increase audibility by temporarily disconnecting the telephone's microphone while the user listens through the earpiece so that background noise is not amplified through the earpiece. The Board seeks information on the feasibility and cost of equipping new and existing public pay telephones with a mute button. Comment is sought on whether such a requirement should be included in the final rule.

ADAAG 4.31.5 requires telephones to be compatible with hearing aids. This is required for all wheelchair accessible telephones and 25% of all other public pay telephones. The Board has removed this requirement as unnecessary because telephones made in or imported into the U.S. are already required to be compatible with hearing aids as a result of the Hearing Aid Compatibility Act of 1988.

The Board has added requirements for telephones with TTYs in 704.4 to address wheelchair access. ADAAG 4.31.9 does not specifically require that telephones with TTYs be wheelchair accessible. As revised, the operable parts of both the TTY and the telephone must be accessible as required in section

309, which specifies accessible reach ranges. Knee and toe space for a forward approach is required below the TTY, and when in use, the touch surface of the TTY keypad must be between 30 to 34 inches from the floor. This height will provide access for both people who use wheelchairs and those who do not. All TTYs are required to be wheelchair accessible, although an exception is provided for TTYs at telephones located in cubicles equipped with fixed seats. Under this exception, which applies only to assembly occupancies, half the number of TTYs are not required to be wheelchair accessible.

Question 29: Requirements for TTYs do not address the height of display screens. Due to the typical character size displayed, users must be in close proximity to the screen. The Board seeks information on TTY screen heights that are appropriate for people who use wheelchairs and for standing persons and whether the requirement for ATM display screens is appropriate for TTYs as well. The Board may include a specification for the height of TTY display screens in the final rule.

ADAAG 4.31.9(3) recognizes portable TTYs as an alternative to those permanently affixed to telephone enclosures in certain limited situations as an ''equivalent facilitation.'' Like other examples of equivalent facilitation, this provision has been removed.

705 Detectable Warnings

The technical criteria for detectable warnings are consistent with those in ADAAG 4.29 and those required on the boarding platforms of transit stations in ADAAG 10.3.1(8). Provisions have been added concerning boarding platforms that generally recognize alternative tactile surfaces equally detectable underfoot or other designs or technologies that provide equal or superior drop-off warning. Provisions originally reserved in ADAAG concerning doors to hazardous areas (4.29.3) and stairs (4.29.4) have been removed. Provisions pertaining to hazardous vehicular areas (4.29.5), reflecting pools (4.29.6), and curb ramps (4.7.7) that were suspended are not retained in the revised guideline.

706 Assistive Listening Systems

Like ADAAG 4.33, the revised guidelines recognize acceptable types of assistive listening systems such as induction loops, infrared systems, FM and AM radio frequency systems, hard-wired earphones, and other equivalent devices. ADAAG 4.33.6 requires that seats served by assistive listening systems be within a viewing distance of 50 feet from the performance area and have a complete view of the performance area. The distance requirement has been removed since it may not be appropriate in certain types of assembly areas, particularly large stadiums and arenas. The Board has removed the requirement for a ''complete view'' of the performance area because this implies that certain seats can be designated for use with assistive listening systems, which contradicts the intent of the revised guidelines that such access be available at most seats in an assembly area.

Two requirements have been added for receivers. Receivers must have a ⅛ inch standard mono jack (or equivalent adapters where other jacks are provided) so that users can use their own cabling as necessary. Receivers required to be compatible with hearing aids (25%) must be neck loops since this type interfaces with hearing aid T-coils. The advisory committee recommended allowing the use of ''compatible headsets.'' The Board has not included this recommendation since such headsets, while technically compatible with hearing aids, are not usable or comfortable with all types of hearing aids.

The performance of assistive listening systems is a concern among users. The quality and capability of systems largely determine the quality of sound transmission. Sound quality, internal noise, signal-to-noise ratio, signal strength, and boost vary among products. As a result, some systems do not adequately meet the needs of people who are hard of hearing. For example, the boost of some products may amplify sound adequately for people with mild hearing loss but not for those with profound hearing loss. Currently, there are no guidelines or standards for the performance of assistive listening systems. In the belief that standards should be developed to provide guidance in selecting products of sufficient quality and capability, the Board funded a study on assistive listening systems that was completed in 1999. Conducted by the Lexington Center, this project included a collection of information on assistive listening systems, a review of the state-of-the-art with respect to assistive listening systems, and a survey of consumers, service providers, dispensers and manufacturers to determine how effective assistive listening systems are at present and what the major problems, limitations, and complaints are regarding existing systems. With this information, the researchers developed objective means for specifying the overall characteristics of any assistive listening system, from sound source to listener's ear, to be able to predict how well the system will work in practice and to determine objective criteria for establishing guidelines or recommendations for the use of assistive listening systems in public places. Consumers, manufacturers, and installers identified signal quality as the primary issue of concern. A wide range of other concerns were also expressed:

- Consumers voiced concerns about appropriate system and receiver type, coupling alternatives, compatibility with aids, interference, availability and logistics of use, and maintenance;
- Manufacturers, installers, and providers identified component cost and quality, microphone utilization, pre-processing strategies, compatibility across multiple systems, field strength, and standardization and regulation as issues.

Researchers have developed Speech Transmission Index software that can assess ALS signal quality on-site using a multi-media laptop computer. The program will be available next year as a download from the Board's website. The Lexington Center will also develop and distribute a series of technical assistance bulletins for consumers, facility operators, and installers outlining its research, findings, and recommendations.

Question 30: Comment is sought on the appropriateness of these criteria for assistive listening systems and their inclusion as technical requirements in the revised guidelines. Specifications based on these criteria may be included in the final rule.

707 Automatic Teller Machines and Fare Machines

Requirements for automatic teller machines (ATMs) and fare machines have been extensively revised and expanded to provide more specific guidance on access to such equipment for people with vision impairments. Substantive changes are proposed to requirements for ATMs in ADAAG 4.34 and for transit station fare vending machines in ADAAG 10.3.1(7).

Question 31: While section 707 specifically addresses ''automatic teller machines'' and ''fare vending machines,'' the Board is considering covering all types of interactive transaction machines, such as point-of-sale machines and information kiosks, among others. Information is requested on any possible design conflicts between the requirements of this section and any specific types of interactive transaction machines. The final rule may be modified to specifically address

unique characteristics of certain types of interactive transaction machines.

Clear floor space requirements in section 707.2 are consistent with ADAAG. Section 707.3 requires operable parts to comply with section 309, which also covers accessible reach ranges. ADAAG 4.34.3 requires this as well but also provides specifications on side reach ranges specific to ATMs only. This criteria establishes maximum reach heights ranging from 46 to 54 inches that are based on the depths of reach ranging from 10 inches to 24 inches. For consistency with the rest of the revised guidelines, these specifications have been removed and the basic reach range specifications in 309 are applied. The revised guidelines require that operable parts must be differentiated by sound or touch prior to activation. An exception in ADAAG 4.34.3 clarifies that, where alternate controls are provided that allow a function to be performed in a substantially equivalent manner, only the controls for that function are required to be accessible. This exception has been removed as unnecessary since redundant operable parts that are accessible are generally acceptable in all cases.

New specifications are provided so that access to input and output devices is provided for people with vision impairments. These requirements provide clearer guidance than ADAAG 4.34.5 which requires instructions and all information for use to be ''accessible to and independently usable by persons with vision impairments.'' The arrangement and tactile qualities are standardized for uniformity to facilitate use by people with little or no vision. Section 707.4 specifies:

- The same degree of privacy of input provided for all users (707.4.1);
- Tactually discernable key surfaces raised at least 1/25 inch from the surrounding surface with outer edges having a radius no more than 1/50 inch (707.4.2);
- A minimum 1/8 inch separation between keys with function keys separated from numeric keys by at least triple the distance of separation provided between numeric keys (707.4.3);
- Arrangement of numeric keys according to the standard 12-key telephone keypad, with the number five key designated by a single raised dot (707.4.4);
- A standard arrangement, tactile marking, and color coding of function keys so that the keys are provided in the following order (left to right or top to bottom) with the tactile markings and color indicated: enter or proceed key (raised circle/ green), clear or correct key (raised vertical line or bar/ black), cancel (raised ex/ red), add value key (raised plus sign/ blue), decrease value key (raised minus sign/ yellow) (707.4.5).

Question 32: The Board seeks comment on the appropriateness of these specified colors, particularly for people who are color blind.

Question 33: ATMs often reject input when maximum time intervals are exceeded. Users are at risk of having the ATM card withheld and may encounter additional transaction charges due to repeated attempts to access the machine. Should the Board include a specific requirement that would allow users to extend the maximum time intervals between transactions beyond the amount of time typically allotted? Where possible, responses should include information on the availability of technology and on any impacts, including costs, in complying with such a requirement. The Board may consider including such a requirement in the final rule.

Section 707.5 covers output devices and requires:

- The same degree of privacy of output provided for all users (707.5.1);
- Transaction prompts within each operation and verification of all user input (707.5.2 and 707.5.3);
- Visual and audible operating instructions that are initiated by the user, that have an expedited process for experienced users, and that have orientation features for users unfamiliar with the physical features of the machine (707.5.4);
- Video display screens to be visible from a point 40 inches above the center of the clear floor space in front of the machine (707.5.6);
- Characters of video display screens to be in a sans serif font, to be at least 3/16 inch high, and to contrast with the background, either light-on-dark or dark-on-light (707.5.6.2);
- Paper currency to be dispensed in descending order with the lowest denomination on top (707.5.7); and
- Providing options for receipts in print, audible format, or both (707.5.8).

Consistent with ICC/ANSI A117.1–1998, sections 707.4.1 and 707.5.1 specify that the same degree of privacy of input and output is to be available to all individuals using the system, and 707.5.5 specifies that audible instructions are to provided through a standard audio mini jack (which would allow individuals to listen to the information through a headset or ear piece), a telephone handset, a wireless transmission system, or another mechanism, all of which ensure privacy. The Board anticipates that alternative privacy systems will be activated by individuals that require them. Furthermore, the Board assumes that ear pieces, headsets, or other types of receivers will be personal equipment provided by end users. Earpieces are very small and can be carried in a shirt pocket or change purse.

Question 34: The Board seeks comment on whether ATM manufacturers or banks intend to provide customers who need audio output receivers for accessing audible output. In addition, the Board seeks to know if customers would or currently do carry receivers or if they view providing their own receivers as an unreasonable expectation.

Question 35: The Board seeks information on the availability of ATMs that meet the output requirements of section 707.5 and the impact, including costs and technological difficulties, in developing new products that comply. Information is also sought on the practice of redeploying ATM equipment and the impact of the output requirements on this practice. Specifically, what is the average lifespan of an ATM and how often might a single ATM be redeployed?

708 Two-Way Communication Systems

This section provides criteria for two-way communication systems where they are provided to gain admittance to a facility or to restricted areas within a facility. These systems must provide audible and visual signals so that they are accessible to people with vision or hearing impairments. Where handsets are provided, the cord must be at least 29 inches long so that access is provided for people using wheelchairs. These requirements derive from those in ADAAG 11.1.3 for judicial, legislative, and regulatory facilities.

Captioning

The Department of Justice Title III regulation addresses access to auxiliary aids and services. Section 36.303(a) (28 CFR Part 36) provides that ''[a] public accommodation shall take those steps that may be necessary to ensure that no individual with a disability is excluded, denied services, segregated or otherwise treated differently than other individuals because of the absence of auxiliary aids and services, unless the public accommodation can demonstrate that taking those steps would fundamentally alter the nature of the goods, services, facilities, privileges, advantages, or accommodations being offered or would result in an undue burden, i.e., significant difficulty or expense.'' The term ''auxiliary aids and

services'' includes, ''qualified interpreters, note takers, computer-aided transcription services, written materials, telephone handset amplifiers, assistive listening devices, assistive listening systems, telephones compatible with hearing aids, closed caption decoders, open and closed captioning, telecommunications devices for deaf persons (TDD's), videotext displays, or other effective methods of making aurally delivered materials available to individuals with hearing impairments.''

The Board is aware that several means of providing captioning for movie theaters are available. This includes both open-captioned and closed-captioned access to the audio information presented in movies. One method for making movies accessible is a system that synchronizes captions and action by projecting reverse text images onto a wall behind an audience. The reverse text is then reflected by transparent screens at individual seats where movie goers can read the script on the screen and view the movie through the screen simultaneously. This type of auxiliary aid and others may require built-in features to make them usable. The Board is aware that other innovative methods of providing accessible communications will soon be available.

Question 36: The Board is interested in more information about various types of captioning as it relates to the built environment. Building operators, managers, consumers, and manufacturers are requested to provide information about what technical provisions are necessary to include in ADAAG to facilitate or augment the use of auxiliary aids such as captioning and videotext displays. People who are deaf or hard of hearing are particularly invited to comment on the various options for providing captioning that would best facilitate effective communication. Where necessary, the Board may include provisions for conduit, electrical service, screen anchoring devices at seats, or other requirements that make providing accessible communication possible in the built environment.

Convenience Food Restaurants

Convenience food restaurants, otherwise known as fast food restaurants, often provide consumers the opportunity to order food from a drive through facility. These facilities usually require voice intercommunication. The Department of Justice has required restaurants to accept orders at pick-up windows when the communications system is not accessible to deaf, hard of hearing, or other people who are unable to use voice communication.

Question 37: Should the Board require that convenience food drive through facilities provide accessible communications. If so, what means would provide the greatest access for a variety of people with disabilities? It has been suggested that an ATM type machine could substitute for voice communication systems currently used. Is such an application practical?

Chapter 8: Special Rooms, Spaces, and Elements

This chapter covers specific elements, rooms and spaces, including assembly areas, dressing, fitting, and locker rooms, medical care facilities, transient lodging, and detention and correctional facilities. Under the new format of the revised guidelines, scoping provisions contained in ADAAG for special occupancy sections have been relocated to Chapter 2. Only technical requirements not otherwise generally addressed are provided here for the rooms and spaces covered by this chapter.

802 Wheelchair Spaces and Designated Aisle Seats in Assembly Areas

This section provides requirements for wheelchair spaces and designated aisle seats in assembly areas. Requirements for wheelchair space surfaces (802.2), width (802.3), depth (802.4), and approach (802.5) are substantively consistent with specifications in ADAAG 4.33, as recommended by the advisory committee. Consistent with a recommendation from the advisory committee, clarification has been added in 802.5 that access to any wheelchair space shall not be through more than one adjoining wheelchair space.

Question 38: Current ADAAG does not expressly address the issue of overlap between wheelchair spaces and circulation routes. The Board is considering adding a provision in the final rule that would clearly prohibit circulation paths from overlapping wheelchair spaces. Comment is sought on whether such a provision should be included in the final rule.

As recommended by the advisory committee, the exception in ADAAG 4.33.3, that permits wheelchair spaces to be clustered in seating areas with sight lines that require slopes greater than 5%, has been removed. The removal of this provision is not intended to prohibit the construction of traditional seating areas such as stadiums, bleachers and balconies.

Section 802.7 requires that each readily removable companion seat be located ''next to and in the same row as each required wheelchair space'' so that there is ''shoulder-to-shoulder'' alignment between users of the wheelchair space and of the adjacent companion seat. This is a change from ADAAG 4.33.3 which requires companion seats to be fixed, as discussed in section 221.3 above. The Board also has added clarification on the location of such seats. Some entities have misinterpreted the phrase ''next to'' in the current ADAAG as permitting the placement of companion seating in a row in front of or behind the accompanying wheelchair space.

Specifications for designated aisle seats in 802.8 are consistent with requirements in ADAAG 4.1.3(19)(a).

Section 802.6 requires dispersion of accessible seating in assembly areas so as to provide individuals with disabilities seating choices that are comparable to those offered to patrons without disabilities. Specifically, in assembly areas with more than 300 seats, wheelchair spaces and designated aisle seats must be dispersed throughout the assembly area in a manner that ensures viewing angles and choices of admission prices that are comparable to those provided to other spectators. This does not represent a change from ADAAG 4.33.3.

Where the minimum number of required wheelchair spaces or designated aisle seats is not sufficient to allow for complete dispersion in terms of the availability of all possible admission prices and viewing angles, 802.6 specifies criteria for dispersion in the following order of priority: admission prices, horizontal dispersion, and vertical dispersion. These criteria are intended to be consistent with Department of Justice (DOJ) interpretation of ADAAG 4.33.3 that wheelchair spaces be provided so that people with disabilities have ''a choice of admission prices and lines of sight comparable to those for members of the general public.''

Section 802.6.1 requires the dispersal of accessible seating by the price of admission, which means that wheelchair spaces and designated aisle seating must be provided in each price level where the ticket prices are distinguished by, or differ according to, the location of the seating. The advisory committee considered dispersion according to admission prices to be primarily an operational matter and recommended that it be removed. The Board believes that such dispersion is an important consideration in the design of assembly areas and the

location of accessible seating and has retained this provision.

Assembly facility designers and people with disabilities have requested clarification of the current requirement that wheelchair spaces be dispersed. The Board has added requirements for horizontal and vertical dispersion. Subject to the scoping requirements shown in Table 221.2.1, wheelchair spaces and designated aisle seats must be located at each accessible level in the assembly area, and in each balcony or mezzanine that is located along an accessible route.

Section 802.6.2 specifies that wheelchair spaces and designated aisle seats shall be located in a manner to provide viewing angles that are, in general, representative of the horizontal viewing angles that are provided to spectators who occupy non-accessible seats. In the past, wheelchair spaces were often located only at the ends of rows, where a few of the standard seats in a seating configuration would be removed and replaced with wheelchair spaces. This section clarifies that this practice is not permissible, and, instead, that wheelchair spaces must be provided in a variety of locations across the horizontal rows of seats.

The requirement for vertical dispersion in 802.6.3 seeks to ensure equal treatment of people with disabilities in terms of the viewing distance from the performance area or playing field. Like all patrons, individual preferences vary among people with disabilities. The Board places significant value on having equal opportunity to select a viewing distance that satisfies individual requirements. However, in the past, many designs have not provided adequate choice of viewing distances. For example, first row seating may be desirable for a hockey game and less desirable for viewing car racing or a movie.

The Board's regulatory assessment indicates that vertical dispersion could cost as much as $11 million for each ''large'' (50,000 seats) stadium or arena to provide vertical dispersion in uppermost decks. According to the regulatory assessment, ''in order to accommodate the additional dispersion required by this item, it is assumed that an upper deck concourse will be required for the facility. These large facilities generally have a lower deck, a middle deck (with suites and/or club level amenities), and an upper deck. The steep slopes used in the upper deck make it impractical to accommodate accessible routes with more than a minimal change in level up or down from the vomitory access point within the seating bowl. The dispersion requirement based on admission pricing, and the vertical dispersion requirement will generally require that a more substantial change in level be accommodated outside the seating bowl for the upper deck area. It is assumed that an additional concourse, of 50,000 square feet in area, will be used to provide access to the upper deck at an additional level.''

Question 39: Are there alternatives to constructing a secondary concourse that would provide vertical dispersion in upper decks of larger stadiums?

Question 40: The Board places significant importance on providing individuals with disabilities with selections from a variety of vantage points to enjoy performances and sporting events. Are there conditions where vertical separation between wheelchair spaces is not desirable? Is there a point where increased distance does not improve accessibility or contribute significantly to equal opportunity?

Question 41: Section 802.6.3 uses the term ''varying distances.'' Does the term ''varying distances'' provide sufficient guidance to allow designers and others to know when they have successfully met the criteria for compliance? If not, would it be preferable if a minimum separation between horizontal rows were specified?

The Board is considering a change in 802.6 that would be more responsive to concerns that have arisen about the lack of dispersion of wheelchair spaces in some assembly areas. Specifically, the Board is concerned that dispersion has been inadequate in smaller facilities such as stadium-style cinemas. While the provisions of 802.9 requiring lines of sight comparable to those provided other spectators must be satisfied in all cases, dispersion is required only when the seating capacity exceeds 300. The Board is considering requiring that dispersion be achieved where fewer than 300 seats are provided. The Board is seeking comment on this point.

Question 42: What would be the impact on small assembly facilities of a reduction in the number of seats triggering the dispersion requirement? The Board is particularly aware of the rapid pace of construction of stadium-style cinemas and seeks comment on whether a change in the dispersion requirement would adversely affect the construction cost of these facilities. What is the average number of seats provided per screen? Do cinemas provide more than one type of theater? For example, is it typical to provide a few larger theaters combined with a number of smaller theaters in a single facility? If so, what is the average size of smaller and larger theaters? Designers and operators of all types of assembly facilities are encouraged to comment on the impact of reducing the number of seats from 300 to 250, 200, or 150. If other trigger points are more reasonable, please provide recommendations and supporting data. People with disabilities are urged to provide comment on experiences that relate to the need, or lack of need, for greater dispersion in smaller assembly facilities. Is it possible that dispersion would be detrimental to the use and enjoyment of smaller facilities by people with disabilities? Common practice is to disperse wheelchair seats in a small space by providing wheelchair spaces at a cross aisle and in the rear of the assembly space. Would it be acceptable for up to one half of the wheelchair spaces to be provided in the last few rows of the assembly space for the purpose of providing vertical separation between wheelchair spaces?

Section 802.9 restates the requirement in ADAAG 4.33.3 that individuals seated in wheelchairs be provided with lines of sight comparable to those provided to other spectators. The Board is aware that design professionals have expressed some uncertainty about how to measure their compliance with this requirement. Therefore, the Board is proposing to amend the guidelines to include specific technical provisions to assist design professionals to determine if the sight lines provided for people who use wheelchair spaces are comparable to those provided to others. These technical provisions address sight lines over both seated and standing spectators. Adherence to these technical provisions will help ensure that people who use wheelchairs are provided with an equal opportunity to view the performance or event held in the assembly area.

Section 802.9.1 addresses the placement of wheelchair spaces in assembly areas where spectators are expected to remain seated during events. Section 802.9.1 provides that spectators seated in wheelchairs at events where people are expected to remain seated shall be provided with lines of sight to the performance area or playing field comparable to that provided to spectators in the seating area in closest proximity to the location of the wheelchair spaces, but not in the same row. Providing lines of sight for people who are seated in the wheelchair spaces that are comparable to nearest seats in the same seating area generally provides lines of sight for people with disabilities that are comparable to those provided to others in facilities such as stadiums or arenas where wheelchair

spaces are dispersed, because the dispersed locations provide the opportunity for people who use wheelchairs to select seats with a range of views of the performing area or playing field.

Section 802.9.2 addresses assembly areas where people are expected to stand at their seats during events. The sight line that is required in 802.9.2 is one that is comparable to the sight lines provided to standing spectators (over other standing spectators) who are located in the seating area closest to the wheelchair spaces, but not in the same row as the wheelchair spaces.

Stadium-style motion picture theaters comprise a type of assembly area that has become increasingly popular in the last several years. They provide the general public with sight lines to the screen that generally are far superior to those offered in traditional-style motion picture theaters. Stadium-style theaters provide improved viewing in one key way: they furnish an unobstructed view of the entire screen through the utilization of relatively high risers that furnish unobstructed viewing over the heads of the persons seated in the rows ahead. As stadium-style theaters are currently designed, patrons using wheelchair spaces are often relegated to a few rows of each auditorium, in the traditional sloped floor area near the screen. Due to the size and proximity of the screen, as well as other factors related to stadium-style design, patrons using wheelchair spaces are required to tilt their heads back at uncomfortable angles and to constantly move their heads from side to side to view the screen. They are afforded inferior lines of sight to the screen.

The Board is aware of the Department of Justice's enforcement of 4.33.3 with respect to assembly areas with stadium-style seating. DOJ has stated that 4.33.3 requires that wheelchair areas be an integral part of any fixed seating plan, and be provided so that people with disabilities have lines of sight and a choice of admission prices comparable to those for other members of the general public. As applied to stadium-style theaters (where most seats are placed on tiers or risers to enhance viewing), DOJ has asserted in attempting to settle particular cases that wheelchair seating locations must: (1) Be placed within the stadium-style section of the theater, rather than on a sloped floor or other area within the auditorium where tiers or risers have not been used to improve viewing angles; (2) provide viewing angles that are equivalent to or better than the viewing angles (including vertical, horizontal, and angle to the top of screen) provided by 50 percent of the seats in the auditorium, counting all seats of any type sold in that auditorium; and (3) provide a view of the screen, in terms of lack of obstruction (e.g., a clear view over the heads of other patrons), that is in the top 50 percent of all seats of any type sold in the auditorium. The Board is considering whether to include specific requirements in the final rule that are consistent with DOJ's interpretation of 4.33.3 to stadium-style movie theaters.

The Board also is considering whether to provide additional guidance on determining whether lines of sight are ''comparable'' in assembly areas, and specifically requests comment on the following issues.

Question 43: The current proposal specifies that wheelchair locations provide sight lines that are comparable to those provided to the seats nearest the wheelchair locations but not in the same row. The Board is considering whether in assembly areas large enough to require dispersion it would be appropriate to mandate that: spectators seated in wheelchair spaces have lines of sight that are equivalent to or better than the lines of sight provided to the majority of spectators seated in the same class or category of seats, and spectators seated in wheelchair spaces have lines of sight that are equivalent to or better than the lines of sight provided to spectators seated next to the wheelchair spaces. For example, a wheelchair space in the club seat section of a stadium would have to provide a line of sight equivalent to or better than the line of sight provided to the majority of spectators in club seats of the same price, as well as provide a line of sight equivalent to or better than that provided to spectators seated next to the wheelchair space. A wheelchair space in a box seat of a theater would have to provide a line of sight equivalent to or better than the line of sight provided to the majority of patrons in box seats of the same price, as well as provide a line of sight equivalent to or better than that provided to spectators seated next to the wheelchair space. A wheelchair space in the $30 per seat section of an arena, where spectators are expected to stand at times during the event, would have to provide a line of sight over standing spectators equivalent to or better than that provided to the majority of standing spectators in the $30 section of the arena, as well as provide a line of sight equivalent to or better than that provided to spectators seated next to the wheelchair space. The Board requests comment on the relative merit of the current proposal, as applied to assembly areas where dispersion is required, and the alternative requirement described in this question.

When the dispersion of wheelchair spaces is not required, (i.e., in small assembly areas) the placement of the wheelchair spaces in relation to other seating acquires greater significance because wheelchair users are not offered a choice of viewing angles. Therefore, in order to ensure equal opportunity for people who use wheelchairs in assembly areas in which dispersion is not required, it may be necessary for wheelchair spaces not only to provide lines of sight comparable to those provided to spectators seated in the same area, but also to provide lines of sight that are comparable to those provided for most of the other patrons in the assembly area. Consequently, the Board is considering specifying that wheelchair spaces in assembly areas, where dispersion is not required, must be located so that the lines of sight provided are comparable to (*i.e.*, equal to or better than) the lines of sight provided to the ''majority'' of the patrons in the assembly area.

Question 44: Should ADAAG specify that wheelchair spaces in assembly areas, where wheelchair spaces generally are not dispersed shall provide unobstructed lines of sight that provide a line of sight equivalent to or better than the line of sight provided for the majority of event spectators?

803 Dressing, Fitting, and Locker Rooms

This section revises requirements for dressing and fitting rooms in ADAAG 4.35 and also specifically addresses locker rooms as well. Section 803.2 requires wheelchair turning space in accessible rooms. A portion of this space (6 inches maximum) can extend under partitions or openings without doors that provide toe clearance at least 9 inches high. A provision in ADAAG 4.35.2 that exempts rooms with curtained openings from the requirement for turning space has been removed so that a consistent level of access is provided in all types of dressing and fitting rooms.

Benches are required to comply with criteria in section 903, which contains revised specifications for benches (see discussion below). Where mirrors are provided, ADAAG 4.35.5 requires that accessible rooms have full-length mirrors and provides minimum dimensions. As recommended by the advisory committee, this requirement has been removed because of the wide variation of room types covered by this section. In some cases, such as a large locker room, compliance with the ADAAG mirror specifications will not

ensure that a full-length mirror is usable from an accessible bench. Consistent with requirements for toilet and bathing facilities, criteria for accessible coat hooks and fold-down shelves have been added in section 803.5 and apply where such elements are provided.

804 Sinks, Kitchens, Kitchenettes, and Wet Bars

This section derives from requirements for transient lodging facilities in ADAAG 9.2.2(7). However, under revised scoping in section 212, these criteria are applicable not only to transient lodging guest rooms but to other accessible spaces as well, such as employee break rooms. These requirements are consistent with ADAAG except that a forward approach to sinks is required whereas ADAAG 9.2.2(7) permits a parallel approach to sinks at guest room kitchens or kitchenettes. This revision allows a consistent level of access at sinks, since accessible sinks in other types of spaces are required to have a forward approach.

805 Medical Care Facility Patient or Resident Sleeping Rooms

This section is based on requirements for patient bedrooms in ADAAG 6.3. Clarification is added in section 805.2 that required wheelchair turning space cannot extend beneath beds. Requirements for clear floor space on each side of beds has been revised to specify a parallel approach according to section 305, which is substantively similar to the requirement in ADAAG 6.3(3) for clear floor space at least 36 inches wide alongside beds. The advisory committee recommended a provision for accessible windows. The Board has relocated this requirement to section 230 so that it applies to other facility types as well. An exception in ADAAG 6.3(1) for entry doors to acute care hospital bedrooms has been relocated to scoping requirements for doors in 404.1 (Tables 404.2.4.1 and 2).

806 Transient Lodging Guest Rooms

Requirements for accessible transient lodging guest rooms in ADAAG 9.2.2 and 9.3 are provided in this section. In accordance with the new format of the revised guidelines, scoping provisions contained in ADAAG for special occupancy sections have been relocated to Chapter 2.

Section 806.2 addresses accessible guest rooms. Scoping for accessible routes, doors and doorways, storage, controls, and parking in ADAAG 9.2.2(2) through (6) are covered by general scoping provisions for such elements in Chapter 2. ADAAG 9.2.2(6) provides an exception for access to exterior spaces that allows a higher threshold or change in level where necessary ''to protect the integrity of the unit from wind/water damage.'' This exception, which requires alternate provisions of access, has been removed because the advisory committee was convinced that design solutions are available that allow access while preventing wind or water damage. Other revisions include:

- Clarification that clear floor space on each side of beds for a parallel approach according to section 305 is required, which is substantively similar to the requirement in ADAAG 9.2.2(1) for clear floor space at least 36 inches wide alongside beds (806.2.3);
- A new provision added by the Board that requires accessible vanity tops at lavatories in accessible guest rooms if vanity tops are provided in other guest rooms (806.2.4.1);
- Sinks in kitchens and kitchenettes are required to provide a forward approach (804.3 as referenced by 806.2.5); and
- Clarification that wheelchair turning space is required and that beds cannot overlap this space (806.2.6).

The advisory committee recommended provisions for accessible windows in transient lodging facilities as well. The Board has relocated this requirement to section 230 so as to be applicable to other facility types as well.

Section 806.3 covers accessible communication features in guest rooms. Like ADAAG 9.3, this section requires visual alarms and notification devices. A provision in ADAAG 9.3.2 recognizes the provision of outlets and wiring for portable devices as an ''equivalent facilitation.'' This provision, like others concerning equivalent facilitation have been removed as information that is advisory. Further, revisions to requirements for visual alarms in guest rooms in section 702.3.6 effectively prohibit the use of most portable alarms. Use of portable visual notification devices for incoming telephone calls and door knocks or bells, while not specifically recognized, are not specifically prohibited.

ADAAG 9.4 requires that doors and doorways to inaccessible guest rooms provide a 32 inch minimum clearance. This requirement has been relocated to scoping for transient lodging guest rooms in section 224.1. ADAAG 9.5 has specific provisions for homeless shelters, halfway houses, transient group homes, and other social service establishments. In buildings not required to have elevators, an exception in ADAAG 9.5.1 states that common use amenities are not required to be accessible on inaccessible floors as long as one of each type of amenity is provided in common use areas on accessible floors. ADAAG 9.5.2 permits allowances for existing homeless shelters that are altered. The advisory committee recommended that these provisions be removed because special treatment of these types of facilities was not considered warranted.

807 Holding Cells and Housing Cells or Rooms

This section provides requirements for cells or rooms required to be accessible in detention or correctional facilities or judicial facilities. The specifications are consistent with ADAAG 11.2.3 and 12.5. Consistent with provisions for medical care facilities and transient lodging, clarification has been added in section 807.2.1 that beds cannot overlap required wheelchair turning space. Benches, where provided, are required to comply with section 903 and visual alarms are subject to requirements in 702.3.6. Specifications for these elements have been revised for benches, as discussed at section 903, and for fire alarm systems, as discussed at section 702.

Chapter 9: Built-In Furnishings and Equipment

This chapter covers built-in furnishings and equipment. Provisions for seating at tables and counters, check-out aisles, and storage areas are provided. These requirements apply to a variety of facilities and effectively replace those in ADAAG 8 specific to library reading and study areas, check-out areas, card catalogs, magazine displays, and stacks.

902 Dining and Work Surfaces

This section is consistent with ADAAG 4.32 in providing specifications for seating at dining and work surfaces, including dining counters covered by ADAAG 5.2. Clear floor space is required for a forward approach complying with section 306, which specifies clearances for knees and toes. (ADAAG 4.32.3 only specifies a knee clearance for the full depth for the clear floor space). Additionally, section 306 is different from ADAAG by increasing the permitted overlap of clear floor space from 19 to 25 inches.

903 Benches

Requirements for benches derive from specifications for dressing and fitting rooms in ADAAG 4.35.4. Section 903.2 clarifies that the required clear floor space is to be positioned for a parallel approach ''to an end of the bench seat.'' Dimensions for the bench have been

revised to provide greater flexibility. The depth has been changed from 24 inches absolute to a range of 20 to 24 inches; the minimum width has been reduced from 48 to 42 inches. The advisory committee considered these changes helpful in allowing more flexibility in the size of benches without reducing access. The Board has added a requirement that back support be provided that extends vertically from a point no more than 2 inches above the bench to a height of at least 18 inches above the bench and that extends horizontally at least 42 inches. This requirement replaces the ADAAG requirement that the bench be installed on the wall.

904 Sales and Service Counters

This section covers check-out aisles, point of sales and service counters, and food service lines. In section 904.2, clarification has been added that all portions of counters required to be accessible shall be adjacent to an accessible walking surface. Section 904.3 and 904.4 are consistent with requirements for check-out aisles and sales and service counters in ADAAG 7.2 and 7.3. Section 904.4 differs from ADAAG in that it does not distinguish between counters with cash registers and those without. Provisions in ADAAG 7.2(2) that recognize alternatives for counters without cash registers (access to auxiliary counters, folding shelves, etc.,) have not been included. ADAAG requirements basically presume a parallel approach to sales and service counters. The Board has included criteria for a forward approach as an alternative to a parallel approach. The Board also has added an exception for alterations where compliance would result in a reduction of the number of existing counters at work stations or existing adjacent mail boxes. In this case, an accessible counter at least 24 inches in length (instead of 36 inches for a parallel approach and 30 inches for a forward approach) is permitted.

Section 904.5 covers food service lines and is consistent with requirements in ADAAG 5.5. A minimum height (28 inches) for tray slides has been added. This specification derives from the ICC/ANSI A117.1 standard. Section 904.6 requires that where counter or teller windows have security glazing to separate personnel from the public, at least one of each type must provide a method to facilitate voice communication. These specifications are based on those in ADAAG 7.2(3) as amended for State and local government facilities. However, in the revised guidelines, this requirement applies to all types of facilities where such glazing is provided at sales or service counters.

905 Storage

Requirements in this section are substantively the same as those for storage in ADAAG 4.25 except for one change. ADAAG requires that storage hardware meet operating characteristics for controls. Section 905.4 requires compliance with all criteria for operable parts in section 309, which includes not only operating characteristics but clear floor space and height as well.

Chapter 10: Transportation Facilities

As in current ADAAG, chapter 10 is organized to cover one type of occupancy because there are a variety of requirements unique to transportation facilities. This chapter covers bus stops and terminals, rail facilities and stations, and airports.

1002 Bus Stops and Terminals

This section is consistent with requirements in ADAAG 10.2 and no substantive changes have been made.

1003 Facilities and Stations

Provisions in ADAAG 10.3 that apply to accessible routes have been removed because scoping for accessible routes in Chapter 2 (section 206) applies to transit facilities as well. This pertains to requirements in 10.3.1(1), (3), (7), (10) and (19). ADAAG 10.3 also covers ''intercity bus stations.'' This reference has been removed from 1003 because virtually all the remaining provisions are specific to rail stations. Intercity bus stations are considered adequately covered by the scoping and technical requirements of the other chapters. In addition, the following requirements have been removed:

- Minimum illumination levels at signage and uniform levels along routes (ADAAG 10.3.1(11)) for consistency since illumination levels in other facility types are not addressed;
- Placement of clocks in ''uniform locations throughout the facility or system'' (ADAAG 10.3.1(15)) since this provision lacks clarity for purposes of compliance;
- Criteria for escalator treads, including marking strips (ADAAG 10.3.1(16)) because they are more applicable to general safety than to accessibility;
- Transparent panels in elevator cars (ADAAG 10.3.1(17)) since this pertains to public security for everyone, not specifically to accessibility for people with disabilities;
- Specifications for counters (ADAAG 10.3.1(18)) because general scoping for sales and service counters in section 227 already covers them; and
- References to alterations to areas containing a primary function (ADAAG 10.3.3) which the Board considers unnecessary since this is addressed generally for alterations in section 202.

Section 1003.2.2 requires signs to comply with section 703, which is considerably different from signage requirements in ADAAG 4.30 as discussed above. Section 1003.2.2.3 addresses informational signs and is consistent with ADAAG 10.3.1(6). However, an exception has been added that allows smaller characters where space for signs is limited. This revision was recommended by the advisory committee.

Section 1003.2.3 addresses fare vending machines and gates. Fare vending machines are required to comply with section 707, which has been extensively updated as discussed above. ADAAG 10.3.1(7) provides criteria for gates at fare collection devices and requires compliance with the requirements for doors and also specifies that those that must be pushed open by people using wheelchairs must have a smooth continuous surface from 2 inches above the floor to 27 inches above the floor. The Board has retained the requirement for compliance with specifications for doors in section 404 but has removed the dimension criteria for push gates, as recommended by the advisory committee.

Section 1003.2.4 requires detectable warnings at platform edges bordering drop-offs. A requirement for detectable warnings at track crossings in ADAAG 10.3.1(13) was removed at the advisory committee's recommendation.

The Board has included several changes to this chapter. Section 1003.2.5 addresses the coordination in height between platform and vehicle floors. This is similar to ADAAG 10.3.1(9) except that clarification has been added that the vertical difference applies to ''all'' passenger car load conditions. ''Slow moving'' people mover systems as addressed in this provision have been defined as those with a maximum speed of 20 miles per hour, consistent with Board and Department of Transportation interpretations. Section 1003.2.6 requires TTYs at public pay telephones at transit facility entrances. The number of pay telephones at an entrance which triggers installation of a TTY has been reduced from four (which ADAAG 10.3.1(12) specifies) to one. Section 1003.2.11 requires accessible direct connections to other facilities. This is consistent with ADAAG 10.3.1(3) but has been clarified that the direct

connection, as opposed to a circulation path to another entrance, is required to be accessible, consistent with the original intent of ADAAG.

Communication

Section 1003.2.8 and 1004.3 require that where public address systems are provided to convey information to the public, a means of conveying the same or equivalent information to persons who are deaf or hard of hearing be provided. Like ADAAG 10.3.1(14) and 10.4.1(6), these provisions apply only to terminals, stations, airports and other transportation facilities. In addition, these provisions do not explicitly require electronic means of visible communication, even when public address systems are intended to be heard in remote areas of a facility. These provisions do not apply to messages that are not intended to be public, such as employee paging.

Question 45: The Board seeks comment on whether additional provisions for an equivalent means of communication should be applied to facilities other than transportation facilities in the final rule. For example, captioning can be associated with electronic scoreboards in stadiums, public address systems at airports, and can convey announcements in other facilities that currently provide communication systems that are inaccessible to people who are deaf or hard of hearing. In addition, the Board is considering establishing more specific criteria for equivalent visual communication. For example, the Board may require that electronic signs be visible in the areas of the facility where public address systems are audible. To accomplish this, the Board may establish technical requirements for visible signs in the final rule. Commenters are requested to provide information, including technical specifications, regarding the various means of providing equivalent information that have been employed in all types of facilities, including transportation facilities and airports. What methods provide the most equivalent visual communication? Are there ''low tech'' methods that are equally effective for certain types of facilities given the customary circulation patterns or other features of the facility?

The present rulemaking proposes to amend only the ADA (36 CFR Part 1191) and the ABA (36 CFR Part 1190) accessibility guidelines however, the Board is interested in obtaining certain key information that may assist in a future rulemaking to amend the Board's transportation vehicle guidelines (36 CFR 1192). Specifically, the Board is interested in technical information, including specifications for making train announcements, including station announcements and emergency announcements accessible to people who are deaf or hard of hearing.

Question 46: What means are available for providing visual train announcements when audible announcements are provided?

Platform Height

Exception 2 to section 1003.2.5 Rail-to-Platform Height would permit the use of mini-high platforms, car-borne or platform-mounted lifts, ramps or bridge plates, or manually deployed devices where it is not operationally or structurally feasible to meet the plus-or-minus ⅝ inch or 1½ inch vertical, or 3 inch horizontal platform-to-car gap requirements. For commuter and intercity rail, ''not operationally feasible'' usually means the track is also used by freight trains and the need to allow the passage of oversized freight precludes a high platform. The American Railway Engineering and Maintenance of Way Association (AREMWA) recommends a new platform height of 8 inches above top-of-rail. This height allows for freight passage while reducing the height of the first step of a rail car above the platform. Often a potable step stool is used to make up the height difference between a lower platform and the first step. Negotiating such a step can be difficult for ambulatory passengers, especially since handrails are usually not available. Also, requiring the 8-inch height would reduce the vertical travel distance for a lift.

Question 47: Should the final rule require that new platforms for commuter or intercity rail stations have a height of 8 inches above top-of-rail?

1004 Airports

Section 1004 provides requirements for airports consistent with ADAAG 10.4. As with requirements for rail stations in 1003, provisions for accessible routes have been removed as unnecessary due to general scoping requirements in section 206. This pertains to requirements in ADAAG 10.4(1), (2), (3), and (5). In addition, a requirement for placement of clocks in uniform locations in ADAAG 10.4(7) has been removed.

Chapter 11: Residential Facilities

The Board has included requirements for accessible dwelling units in the revised guidelines. The technical requirements of this chapter derive from updated guidelines for residential facilities contained in the ICC/ANSI A117.1–1998 standard. These requirements represent an addition to ADAAG, which currently does not address such facilities. Under the ADA, the Department of Justice determines the application of the guidelines to residential facilities. This chapter also serves to update requirements for dwelling units in the minimum guidelines for federally funded facilities upon which UFAS is based.

Section 1102 covers accessible dwelling units and provides requirements for entrances, elements of accessible routes, private residence elevators, laundry equipment, toilet and bathing facilities, kitchens, windows, and storage facilities. Substantive changes from the ICC/ANSI A117.1 standard include:

- Removal of an exception for exterior sliding doors that would permit a maximum '' inch threshold instead of the ⅓ inch maximum otherwise specified (1102.5);
- Addition of a requirement that private residence elevators meet the ASME/ANSI A17.1 safety standard (1102.7);
- Revision of inside elevator car dimensions to meet the clear floor space requirements in section 305 (1102.7.7);
- Addition of a requirement that, where removable base cabinetry is used below lavatories and kitchen work surfaces and sinks, the sides and back wall be finished (1102.11.3, 1102.12.3.1, 1102.12.4.1); and
- Addition of specifications for bottom-hinged ovens (1102.12.6.5.2).

Section 1103 provides requirements for dwelling units with accessible communication features. Specifications in this section cover smoke detectors, fire alarms systems and visual appliances, doorbells, and entry communication systems. The Board has added requirements in section 1103.5 that doorbells provide a visible signal and that these visible notification devices, where located in sleeping areas, have a deactivation switch.

Some designers or building owners may elect to provide visual alarms in more than one room. However, the visual signal is required to be provided in only one room so that building alarms are visible from within the dwelling unit. Once wiring is provided for a single visual signal in the dwelling unit, additional visual signals can be connected to the system when needed by an occupant.

Regulatory Process Matters

Executive Order 12866: Regulatory Planning and Review Congressional Review Act

This proposed rule is an economically significant regulatory action under Executive Order 12866 and has been reviewed by the Office of Management and Budget. The proposed rule is also a major rule under the Congressional Review Act. The Board has prepared a regulatory assessment for the proposed rule. The regulatory assessment has been placed in the docket and is available for public inspection. The regulatory assessment is also available on the Board's Internet site (http://www.access-board.gov/ada-aba/regimpact.htm).

The proposed rule revises and updates the accessibility guidelines for the Americans with Disabilities Act and the Architectural Barriers Act, and will ensure greater consistency and uniformity in the accessible design, construction, and alteration of buildings and facilities by the private sector, State and local governments, and the Federal government. The proposed rule is based largely on the recommendations of the ADAAG Review Advisory Committee, which consisted of representatives of the design and construction industry, the building code community, State and local governments, and people with disabilities.

The regulatory assessment examines the impact of sections of the proposed rule that establish new requirements. Requirements currently contained in existing guidelines and regulations have not been considered in the regulatory assessment. The Board used several sources as a baseline to determine the impact of sections of the proposed rule that establish new requirements. These include the American National Standard A117.1–1998 for Accessible and Usable Buildings and Facilities, a consensus standard referenced by the model codes; the new International Building Code being developed by the International Code Council which is expected to widely be adopted by State and local governments; and industry practice. The Board has worked closely with the groups responsible for developing the A117.1–1998 standard and the International Building Code to harmonize the Board's guidelines and those codes and standards. As a result, the proposed rule, the A117.1–1998 standard, and the International Building Code contain very similar provisions. For those sections of the proposed rule that are similar to the A117.1–1998 standard and the International Building Code, the Board has assumed no impact resulting from the proposed rule. Where the proposed rule differs from the A117.1–1998 standard, the International Building Code, and industry practice, the Board examined sections that are likely to have a measurable impact on the design and construction of buildings and facilities. Sections that are likely to have no or minimal impact were not included in the regulatory assessment. In all, 13 separate building elements or items were examined in the regulatory assessment. One of the items, accessible vending equipment, was determined to have no cost impact on further examination and is not included in the data summarized below.

Table 1 lists the sections of the proposed rule that are expected to have an impact, the accessible elements required, and the unit cost for each element. Where an element is expected to result in an increase in space, the amount of space increase or the average cost for a square foot of space is listed.

TABLE 1.—BUILDING ELEMENT COSTS: NEW CONSTRUCTION

Section	Accessible Element	Unit Cost
203.2	Employee Work Areas—Visual Alarms	$270
217.4.2.1, F217.4.2, F217.4.3	TTYs	1,998
231.1, 708.1, 708.2	Two-Way Communication Systems—Visual Signals	1,077
234.1.3, 1103.1, 1103.5, 1103.5.1	Dwelling Units: Communication Features—Doorbell with Visual Signal	250
234.1.3, 1103.1, 1103.6	Dwelling Units: Communication Features—TTY Capability at Site/Building/Floor Entry	264
230.1	Accessible Operable Windows—"Add-On" Hardware	364
221.5	Assembly Areas: "Equivalent" Vertical Access—3–Stop Hydraulic Elevator	61,794
802.6	Assembly Areas: Dispersion of Wheelchair Spaces/Designated Aisle Seats—Platform Lifts	14,213
221.3, 802.7	Assembly Areas: Wheelchair Space Companion Seats—6 Square Ft. Area Increase and Anchorings.	1,315
221.4.1, 221.4.2	Assembly Areas: Designated Aisle Seats on Accessible Route—Average Cost Square Foot of Assembly Facility.	204
224.4, 806.3, 806.3.1, 702.3.6	Transient Lodging Guest Rooms—Visual Alarms	293
224.2, 806.3, 806.3.2, 704.3	Transient Lodging Guest Rooms—Doorbell with Visual Signal	263

Table 2 summarizes data for the building types that are expected to be affected by the sections in Table 1. Four building types are included: office building, hotel, multi-family dwelling unit, and stadium/arena. Stadium/arena is further examined by the size of the facility: large, medium, and small. With the exception of the large stadium/arena, the total cost for the accessible elements as a percentage of total construction costs is one-half percent or less for the various building types. Multiplex cinemas were considered also but were determined to have no cost impact.

TABLE 2.—BUILDING TYPE COSTS: NEW CONSTRUCTION

Building type size, construction cost	Accessible elements		Total cost for accessible elements percentage of construction cost
	Number	Cost	
Office Building, 200,000 sq. ft., $25,000,000.	Employee Work Areas—Visual Alarm Appliances, 250	$65,375	$66,452
	Two-Way Communication Systems, 1	1,077	0.27%

TABLE 2.—BUILDING TYPE COSTS: NEW CONSTRUCTION—Continued

Building type size, construction cost	Accessible elements		Total cost for accessible elements percentage of construction cost
	Number	Cost	
Hotel, 150 guest rooms, $8,000,000.	Guest Rooms—Visual Alarms 63	18,459	$35,028
	Guest Rooms—Notification Devices, 63	16,569	0.44%
Multi-Family Dwelling Unit, 800–1,000 sq. ft., $100,000.	Dwelling Unit—Doorbell with Visual Signals, 1	250	$514
	Dwelling Unit—TTY Capability on Site/Building/Floor Entry System 1	264	0.51%
Large Stadium/Arena, 50,000 seats, $350,000,000.	''Equivalent'' Vertical Access, 3 Elevators	185,382	$11,846,702
	Dispersion of Wheelchair Spaces/Designated Aisle Seats, 50,000 sq. ft., mezzanine in upper deck.	11,000,000	3.4%
	Wheelchair Space Companion Seats, 501	661,320	
	Designated Aisle Seats in Accessible Route, No impact assumed.		
Medium Stadium/Arena, 20,000 seats, $200,000,000.	''Equivalent'' Vertical Access, 2 Elevators	123,558	$751,760
	Dispersion of Wheelchair Spaces/Designated Aisle Seats, 4 Lifts	$56,852	0.38%
	Wheelchair Space Companion Seats, 201	265,320	
	Designated Aisle Seats on Accessible Route, 1,500 sq. ft.	306,000	
Small Stadium/Arena, 11,000 seats $50,000,000.	''Equivalent'' Vertical Access, 1 Elevator	61,794	$236,740
	Dispersion of Wheelchair Spaces/Designated Aisle Seats, 2 Lifts	28,426	0.47%
	Wheelchair Space Companion Seats, 111	146,520	
	Designated Aisle Seats on Accessible Route, No impact assumed.		

As shown in Table 2, the regulatory assessment sampled a variety of types of assembly facilities. However, the regulatory assessment did not include facilities that have between 300 and 11,000 seats. The Board seeks information on what types of facilities have more than 300 and fewer than 11,000 seats. In addition, how many of each type of facility is constructed each year?

None of the building types examined include TTYs or operable windows because either these elements typically are not provided in the building types; or if provided, these elements would be covered by the existing guidelines, the A 117.1–1998 standard, or the International Building Code. For instance under the existing guidelines (ADAAG 4.1.3(17)(c)(i)), public facilities are required to provide a TTY if an interior public pay phone is provided in a public use area of a building. Under the proposed rule, public facilities would have to provide a TTY on a floor when a public pay phone is provided on a floor. If public pay phones are provided in public facilities, it is assumed that they are usually located in the lobby area on the main floor and would be covered by the existing guidelines. The number of new facilities that would not otherwise be covered by the existing guidelines, the A 117.1–1998 standard, and the International Building Code and would have to provide TTYs under the proposed rule is assumed to be small. It is estimated that 50 additional TTYs would be provided annually at an aggregate cost of $99,900. The Board seeks comment on this estimate.

Table 3 presents the annual costs of the accessible elements for the various building types examined. The total costs are estimated to be $88,360,726. These costs are for new construction only. Because of the widely varying conditions in existing buildings and facilities, it is not feasible to estimate the impact of the proposed rule where alterations occur. The extent of the impact of the proposed rule on an existing building or facility undergoing alteration will depend on the existing condition of the building with regard to accessibility, the extent of the work planned, and the technical feasability of compliance.

TABLE 3.—ANNUAL COSTS FOR BUILDING TYPES: NEW CONSTRUCTION

Building type and number of new facilities	Costs for accessible elements
Office Building, 250	$16,397,600
Hotel, 890	31,174,920
Multi-Family Dwelling Unit, 800	305,600
Large Stadium/Arena, 3	35,540,106
Medium Stadium/Arena, 5	3,758,800
Small Stadium/Arena, 5	1,183,700
All Building Types	88,360,726

The Board has requested Federal agencies to review the impact of the proposed requirements in the Architectural Barriers Act guidelines on their leased facilities. The General Services Administration and other agencies report that they do not expect an impact on their leased facilities. The United States Postal Service (USPS) reports that it leases approximately 27,000 facilities, and of these approximately 3,000 new leases are negotiated annually for previously occupied facilities. USPS reports that it will have to provide van accessible parking spaces and accessible customer service counters, and upgrade its alarm systems when new leases are negotiated for previously occupied facilities. USPS estimates that these items will cost $10,000 per facility, or $30,000,000 annually.

The proposed rule will ensure that buildings and facilities covered by the Americans With Disabilities Act and the Architectural Barriers Act are readily accessible to and usable by people with disabilities and provide them equal opportunity to participate in and use the activities, goods, benefits, programs, and services provided therein. The proposed rule should also facilitate the certification of State and local building codes by the Attorney General. Under the Americans With Disabilities Act, State and local governments may request the Attorney General to certify State and local building codes where those codes establish accessibility requirements that meet or exceed the Federal requirements. As discussed above, the Board has worked with

groups responsible for the A117.1–1998 standard and International Building Code to harmonize the guidelines and those codes and standards, which are expected to be widely adopted by State and local governments. As a result, it should be easier for State and local governments to have the Attorney General certify their building codes in the future. Architects, designers, owners, and other persons covered by the Americans With Disabilities Act also will find it easier to comply with these laws if State and local building codes are certified. Instead of having to review building and facility designs for compliance with both Federal requirements and State and local government requirements, persons can be reasonably assured that compliance with State and local requirements will satisfy Federal requirements. The Americans With Disabilities Act specifically provides that in any enforcement action, certification of a State and local building code by the Attorney General is rebuttable evidence that the code meets or exceeds Federal requirements. The proposed rule is expected to result in a greater degree of compliance with Federal requirements.

Executive Order 13132: Federalism

This proposed rule is issued to implement the Americans With Disabilities Act and the Architectural Barriers Act and will ensure that buildings and facilities covered by those laws are readily accessible to and usable by people with disabilities. Ensuring the civil rights of people with disabilities has been recognized as a responsibility of the Federal government. The Americans With Disabilities Act was enacted to provide a clear and comprehensive national mandate for the elimination of discrimination against people with disabilities. Issuance of the proposed rule is consistent with the fundamental federalism principles set forth in Executive Order 13132. The Board is required by Federal statute to develop and maintain accessibility guidelines for building and facilities to serve as a basis for uniform accessibility standards adopted by other Federal agencies. In updating and revising the guidelines, the Board has utilized an advisory committee which represented the design and construction industry, the building code community, State and local governments, and people with disabilities. In addition to requesting public comments on the proposed rule, the Board will hold public hearings to give all interested persons ample opportunity to share their views regarding the rule with the Board.

Unfunded Mandates Reform Act

The Unfunded Mandates Reform Act does not apply to proposed or final rules that enforce constitutional rights of individuals or enforce any statutory rights that prohibit discrimination on the basis of race, color, sex, national origin, age, handicap, or disability. Since the proposed rule is issued under the authority of the Americans With Disabilities Act and the Architectural Barriers Act, an assessment of the rule's affects on State, local, and tribal governments, and the private sector is not required by the Unfunded Mandates Reform Act.

Regulatory Flexibility Act

The Chair, on behalf of the Board, certifies pursuant to 5 U.S.C. 605(b) that the proposed rule will not have a significant economic impact on a substantial number of small entities. As discussed above under Executive Order 12866 and the Congressional Review Act, the Board has assessed the impact of the proposed rule on various building types. The proposed rule is expected to have an impact of one-half percent or less on new construction costs for the various buildings and facilities, with the exception of a large stadium/arena which does not qualify as a small entity. These impacts are described more fully in the regulatory analyses prepared for the proposed rule. Based on this, the Board expects that the proposed rule will have an economic impact, but not a significant economic impact, on small entities and therefore a regulatory flexibility analysis has not been prepared. Nonetheless, the Board is interested in the potential impacts of the proposed rule on small entities and welcomes additional comments during the rulemaking process on issues related to such impacts.

List of Subjects

36 CFR Part 1190

Buildings and facilities, Individuals with disabilities.

36 CFR Part 1191

Buildings and facilities, Civil rights, Individuals with disabilities, Transportation.

June I. Kailes,

Chair, Architectural and Transportation Barriers Compliance Board.

For the reasons stated in the preamble, under the authority of 29 U.S.C. 792(b)(3) and 42 U.S.C. 12204, the Architectural and Transportation Barriers Compliance Board proposes to amend chapter XI of Title 36 of the Code of Federal Regulations as follows:

PART 1190—[REMOVED]

1. Part 1190 is removed.

2. Part 1191 is revised to read as follows:

PART 1191—AMERICANS WITH DISABILITIES ACT (ADA) ACCESSIBILITY GUIDELINES FOR BUILDINGS AND FACILITIES; ARCHITECTURAL BARRIERS ACT (ABA) ACCESSIBILITY GUIDELINES

Sec.
1191.1 Accessibility guidelines.
Appendix A to Part 1191—Americans With Disabilities Act: Scoping
Appendix B to Part 1191—Architectural Barriers Act: Scoping
Appendix C to Part 1191—Technical

Authority: 29 U.S.C. 792(b)(3); 42 U.S.C. 12204.

§ 1191.1 Accessibility guidelines.

(a) The accessibility guidelines for buildings and facilities covered by the Americans with Disabilities Act are set forth in Appendices A and C to this part. The guidelines serve as the basis for accessibility standards adopted by the Department of Justice and the Department of Transportation under the Americans with Disabilities Act.

(b) The accessibility guidelines for buildings and facilities covered by the Architectural Barriers Act are set forth in Appendices B and C to this part. The guidelines serve as the basis for accessibility standards adopted by the General Services Administration, the Department of Defense, the Department of Housing and Urban Development, and the United States Postal Service under the Architectural Barriers Act.

BILLING CODE 8150–01–P

TABLE OF CONTENTS

CHAPTER 1: APPLICATION AND ADMINISTRATION 3
101 Purpose 3
102 Provisions for Adults and Children 3
103 Equivalent Facilitation 3
104 Conventions 4
105 Referenced Standards 5
106 Definitions 6

CHAPTER 2: SCOPING REQUIREMENTS 11
201 Application 11
202 Existing Buildings and Facilities 11
203 General Exceptions 12
204 Protruding Objects 13
205 Operable Parts 13
206 Accessible Routes 13
207 Accessible Means of Egress 19
208 Parking Spaces 19
209 Passenger Loading Zones 22
210 Stairways 22
211 Drinking Fountains and Water Coolers 22
212 Sinks, Kitchens, Kitchenettes, and Wet Bars 22
213 Toilet and Bathing Facilities 23
214 Laundry Equipment 25
215 Emergency Alarm Systems 25
216 Signs 25
217 Telephones 26
218 Transportation Facilities 29
219 Assistive Listening Systems 29
220 Automatic Teller Machines and Fare Machines 30
221 Assembly Seating 30
222 Dressing, Fitting, and Locker Rooms 31
223 Medical Care Facility Patient or Resident Sleeping Rooms 31
224 Transient Lodging Guest Rooms 32
225 Self-Service Storage Facilities 35
226 Dining Surfaces and Work Surfaces 35
227 Sales and Service Counters 36
228 Storage 37
229 Depositories, Vending Machines, Change Machines, and Mail Boxes 38
230 Windows 38
231 Two-Way Communication Systems 38

232 Judicial Facilities 38
233 Detention and Correctional Facilities 39
234 Accessible Residential Facilities 41

CHAPTER 1: APPLICATION AND ADMINISTRATION

101 Purpose

This part provides scoping and technical requirements for accessibility to *sites*, *facilities*, *buildings*, and *elements* by individuals with disabilities. These requirements are to be applied during the design, construction, and *alteration* of *sites*, *facilities*, *buildings*, and *elements* to the extent required by regulations issued by Federal agencies under the Americans with Disabilities Act of 1990.

102 Provisions for Adults and Children

The technical requirements in this part are based on adult dimensions and anthropometrics. This part also contains technical requirements based on children's dimensions and anthropometrics for drinking fountains, water closets, toilet compartments, lavatories and sinks, dining surfaces, and work surfaces.

103 Equivalent Facilitation

Nothing in this part is intended to prevent the use of designs or technologies as alternatives to those prescribed in this part provided they result in substantially equivalent or greater accessibility and usability.

Advisory 103
The responsibility for demonstrating equivalent facilitation in the event of a challenge rests with the covered entity. With the exception of transit *facilities* which are covered by regulations issued by the Department of Transportation, there is no process for certifying that an alternative design provides equivalent facilitation.

104 Conventions

Figure 104

Convention	Description
36 / 915	dimension showing English units (in inches unless otherwise specified) above the line and SI units (in millimeters unless otherwise specified) below the line
6 / 150	dimension for small measurements
33-36 / 840-915	dimension showing a range with minimum - maximum
min	minimum
max	maximum
>	greater than
<	less than
	boundary of clear floor space or maneuvering clearance
℄	centerline
	a permitted element or its extension
	direction of travel or approach
	a wall, floor, ceiling or other element cut in section or plan
	an element in elevation or plan
	location zone of element, control or feature
italics	defined term

104.1 Dimensions. Dimensions that are not stated as "maximum" or "minimum" are absolute.

104.1.1 Construction and Manufacturing Tolerances. All dimensions are subject to conventional industry tolerances.

Advisory 104.1.1
Conventional industry tolerances recognized by this provision include those for field conditions and those that may be a necessary consequence of a particular manufacturing process. Recognized tolerances are not intended to apply to design work. It is good practice when specifying dimensions to avoid stating in the specification a tolerance (i.e., if this document requires "32 inches" avoid specifying "32 inches plus or minus X inches"). This could lead some to mistakenly assume that a tolerance allowed by this document can be applied in addition to the specified tolerance. This "double-dipping" or compounding of tolerances would not achieve the intended requirement. Where the requirement itself allows a range of dimensions, such as in section 604.4 where the height of water closets must be 17 inches minimum to 19 inches maximum measured to the top of the toilet seat, "17 inches minus X inches minimum to 19 inches plus X inches maximum" is how the provision for tolerance is intended to apply. As stated previously though, it is good practice to simply specify the dimensions as "17 inches to 19 inches". Information on specific tolerances may be available from industry or trade organizations, code groups and *building* officials, and published references.

104.2 Calculation of Percentages. Where the required number of *accessible elements* or *facilities* to be provided is determined by calculations of ratios or percentages and remainders or fractions result, the next greater whole number of such *elements* or *facilities* shall be provided. Where the determination of the required size or dimension of an *element* or *facility* involves ratios or percentages, rounding down for values less than one half shall be permitted.

105 Referenced Standards

105.1 General. The standards referenced in this part and listed in 105.2 shall be considered part of the requirements of this part to the prescribed extent of each such reference. References to standards within the technical and scoping requirements shall apply to the specific edition of the reference standard listed in 105.2. Where differences occur between provisions of this part and referenced standards, the provisions of this part shall apply.

Advisory 105.1
In addition to the requirements of this document, there is an obligation to meet the requirements of any referenced standards unless there is a conflict with the guidelines. It is important to use the specific edition of the referenced standards.

105.2 Referenced Standards.

105.2.1 Installation, Maintenance, and Use of Protective Signaling Systems. NFPA 72-1996.

105.2.2 Power-Operated Pedestrian Doors. ANSI/BHMA A156.10-1996.

105.2.3 Power-Assist and Low-Energy Power-Operated Doors. ANSI/BHMA A156.19-1996.

105.2.4 Safety Code for Elevators and Escalators. ASME/ANSI A17.1-1993, (including Addenda ASME/ANSI A17.1a-1994 and ASME/ANSI A17.1b-1995).

106 Definitions

106.1 General. Terms defined in 106.5 shall have the specified meaning for purposes of this part, unless otherwise stated.

106.2 Terms Defined in Referenced Standards. Terms not defined in this section or in regulations issued by the Department of Justice and the Department of Transportation to implement the Americans with Disabilities Act but specifically defined in a referenced standard, shall have the specified meaning from the referenced standard, unless otherwise stated.

106.3 Undefined Terms. The meaning of terms not specifically defined in this part, or in regulations issued by the Department of Justice and the Department of Transportation to implement the Americans with Disabilities Act or in referenced standards shall be as defined by collegiate dictionaries in the sense that the context implies.

106.4 Interchangeability. Words, terms and phrases used in the singular include the plural and those used in the plural include the singular.

106.5 Defined Terms.

Accessible. A *site*, *building*, *facility*, or portion thereof that complies with this part.

Accessible Means of Egress. Means of egress is a continuous and unobstructed way of exit travel from any point in a *building* or *facility* to a *public way*. An *accessible means of egress* is one that provides an *accessible route* to an *area of refuge*, a horizontal exit or a *public way*.

Accessible Route. A continuous, unobstructed path that complies with this part.

Addition. An expansion, extension, or increase in the gross floor area or height of a *building* or *facility*.

Administrative Authority. A governmental agency that adopts or enforces regulations and guidelines for the design, construction, or *alteration* of *buildings* and *facilities*.

Alteration. A change to a *building* or *facility* that affects or could affect the usability of the *building* or *facility* or part thereof. *Alterations* include, but are not limited to, remodeling, renovation, rehabilitation, reconstruction, historic restoration, resurfacing of *circulation paths* or *vehicular ways*, changes or rearrangement of the structural parts or *elements*, and changes or rearrangement in the plan configuration of walls and full-height partitions. Normal maintenance, reroofing, painting or

wallpapering, or changes to mechanical and electrical systems are not *alterations* unless they affect the usability of the *building* or *facility*.

Area of Refuge. An area where people may remain temporarily to await further instructions or assistance during emergency evacuation.

Assembly Area. A room or *space* accommodating a group of individuals for recreational, educational, political, social, civic, or amusement purposes, or for the consumption of food and drink.

Automatic Door. A door operated with power-operated mechanisms and *operable parts* that open and close the door automatically upon receipt of a momentary actuating signal (see *power-assisted door*).

Building. Any structure used or intended for supporting or sheltering any use or occupancy.

Characters. Letters, numbers, punctuation marks and typographic symbols.

Children's Use. *Spaces* and *elements* specifically designed for use primarily by people 12 years old and younger.

Circulation Path. An exterior or interior way of passage from one place to another for pedestrians, including, but not limited to, *walks*, hallways, courtyards, stairways, and stair landings.

Closed-Circuit Telephone. A telephone with a dedicated line such as a house phone, courtesy phone or phone that must be used to gain entrance to a *facility*.

Common Use. Interior or exterior rooms, *spaces*, or *elements* that are made available for the use of a restricted group of people such as the occupants of a homeless shelter, the occupants of an office *building*, or the guests of such occupants.

Cross Slope. The slope that is perpendicular to the direction of travel (see *running slope*).

Curb Ramp. A short *ramp* cutting through a curb or built up to it.

Destination-Oriented Elevator. An elevator system that provides lobby controls to select floor stops, lobby indicators designating which elevator to use and a car indicator designating the floors at which the car will stop.

Detectable Warning. A standardized surface feature built in or applied to walking surfaces or other *elements* to warn visually impaired people of hazards on a *circulation path*.

Dwelling Unit. A single unit containing rooms and *spaces* for living, bathing, and sleeping, and which may provide a kitchen or food preparation area.

Element. An architectural or mechanical component of a *building*, *facility*, *space*, or *site*.

Employee Work Area. All or any portion of a *space* used only by employees and used only for work. Corridors, toilet rooms, kitchenettes and break rooms are not *employee work areas*.

Entrance. Any access point to a *building* or portion of a *building* or *facility* used for the purpose of entering. An *entrance* includes the approach *walk*, the vertical access leading to the *entrance* platform, the *entrance* platform itself, vestibule if provided, the entry door or gate, and the hardware of the entry door or gate.

Facility. All or any portion of *buildings*, structures, *site* improvements, *elements*, and pedestrian or vehicular routes located on a *site*.

Ground Floor. Any *occupiable* floor not more than one *story* above or below grade with direct access to grade.

Mail Boxes. Receptacles for the receipt of documents, packages, or other deliverable matter. *Mail boxes* include, but are not limited to, post office boxes and receptacles provided by commercial mail-receiving agencies, apartment houses, and schools.

Marked Crossing. A crosswalk or other identified path intended for pedestrian use in crossing a *vehicular way*.

Mezzanine. That portion of a *story* which is an intermediate floor level placed within the *story* and having *occupiable space* above and below its floor.

Occupiable. A room or enclosed *space* designed for human occupancy.

Operable Part. A component of an *element* used to insert or withdraw objects, or to activate, deactivate, or to adjust the *element*.

Pictogram. A pictorial symbol which represents activities, *facilities*, or concepts.

Power-Assisted Door. A door used for human passage with a mechanism that helps to open the door, or relieves the opening resistance of a door, upon the activation of a switch or a continued force applied to the door itself (see *automatic door*).

Private Building or Facility. A place of public accommodation or a commercial *building* or *facility* subject to title III of the ADA and 28 CFR part 36 or a transportation *building* or *facility* subject to title III of the ADA and 49 CFR 37.45.

Project. The whole of one or more residential structures and appurtenant structures, equipment, roads, *walks*, and parking lots which are covered by a single contract for Federal assistance, or are developed as a whole for processing purposes, whether or not located on a common *site*.

Public Building or Facility. A *building* or *facility* or portion of a *building* or *facility* constructed by, on behalf of, or for the use of a public entity subject to title II of the ADA and 28 CFR part 35 or to title II of the ADA and 49 CFR 37.41 or 37.43.

Public Entrance. An *entrance* that is not a *service entrance* or a *restricted entrance*.

Public Use. Interior or exterior rooms, *spaces*, or *elements* that are made available to the public. *Public use* may be provided at a *building* or *facility* that is privately or publicly owned.

Public Way. Any street, alley or other parcel of land open to the outside air leading to a public street, which has been deeded, dedicated or otherwise permanently appropriated to the public for *public use* and which has a clear width and height of not less than 10 feet (3,050 mm).

Qualified Historic Building or Facility. A *building* or *facility* that is listed in or eligible for listing in the National Register of Historic Places; or designated as historic under an appropriate State or local law.

Ramp. A walking surface which has a *running slope* steeper than 1:20.

Restricted Entrance. An *entrance* that is made available for *common use* on a controlled basis but not *public use* and that is not a *service entrance*.

Running Slope. The slope that is parallel to the direction of travel (see *cross slope*).

Self-Service Storage Facility. Real property designed and used for the purpose of renting or leasing individual storage *spaces* to customers for the purpose of storing and removing personal property on a self-service basis.

Service Entrance. An *entrance* intended primarily for delivery of goods or services (see *entrance, public entrance,* and *restricted entrance*).

Sign. An architectural *element* composed of displayed text, numbers, symbolic, *tactile* or pictorial information.

Site. A parcel of land bounded by a property line or a designated portion of a public right-of- way.

Space. A definable area, such as a room, toilet room, hall, *assembly area*, *entrance*, storage room, alcove, courtyard, or lobby.

Story. That portion of a *building* or *facility* included between the upper surface of a floor and upper surface of the floor or roof next above. A *story* containing one or more *mezzanines* has more than one floor level.

Structural Frame. The columns and the girders, beams, and trusses having direct connections to the columns and all other members which are essential to the stability of the *building* or *facility* as a whole.

Tactile. An object that can be perceived using the sense of touch.

Technically Infeasible. With respect to an *alteration* of a *building* or a *facility*, something that has little likelihood of being accomplished because existing structural conditions would require removing or altering a load-bearing member which is an essential part of the *structural frame*; or because other

existing physical or *site* constraints prohibit modification or *addition* of *elements*, *spaces*, or features which are in full and strict compliance with the minimum requirements for *alterations* and which are necessary to provide accessibility.

Transient Lodging. A *building* or *facility* excluding inpatient medical care *facilities*, long-term care *facilities*, or detention or correctional *facilities* that contains one or more guest rooms for sleeping. Guest rooms may include a kitchen or food preparation area. *Transient lodging* may include, but is not limited to, resorts, group homes, hotels, motels, and dormitories, homeless shelters, halfway houses and social service lodging.

TTY. Machinery or equipment that employs interactive text based communications through the transmission of coded signals across the standard telephone network. The term *TTY* can include, for example, devices known as TDDs (telecommunication display devices or telecommunication devices for deaf persons) or computers with special modems. *TTYs* are also called text telephones.

Vehicular Way. A route intended for vehicular traffic, such as a street, driveway, or parking lot.

Walk. An exterior pathway with a prepared surface intended for pedestrian use, including general pedestrian areas such as plazas and courts.

Wheelchair. A mobility aid belonging to any class of three- or four-wheeled devices, usable indoors, designed for and used by individuals with mobility impairments, whether operated manually or powered.

Wheelchair Space. *Space* for a single *wheelchair* and its occupant.

CHAPTER 2: SCOPING REQUIREMENTS

201 Application

201.1 Scope. All areas of newly designed or newly constructed *buildings* and *facilities* and *altered* portions of existing *buildings* and *facilities* shall comply with this part.

201.2 Application Based on Building or Facility Use. Where a *site*, *building*, or *facility* contains more than one use, each portion shall comply with the applicable requirements for that use.

201.3 Temporary and Permanent Structures. This part shall apply to temporary and permanent *buildings* and *facilities*.

Advisory 201.3
Temporary *buildings* or *facilities* covered by these guidelines include, but are not limited to, reviewing stands, temporary classrooms, bleacher areas, fixed furniture systems, wall systems, and exhibit areas, temporary banking *facilities*, temporary health screening *facilities*, and temporary pedestrian passageways around a construction *site*. Structures and equipment directly associated with the actual processes of construction are not required to be *accessible* as permitted in 203.2.

202 Existing Buildings and Facilities

202.1 General. *Additions* and *alterations* to existing *buildings* or *facilities* shall comply with 202.

202.2 Additions. Each *addition* to an existing *building* or *facility* shall comply with the requirements for new construction. Each *addition* that affects or could affect the usability of an area containing a primary function shall comply with 202.4.

202.3 Alterations. Where existing *elements* or *spaces* are *altered*, each *altered element* or *space* shall comply with the applicable provisions of this chapter.

Advisory 202.3
Although covered entities are permitted to limit the scope of an *alteration* to individual *elements*, designers should note that the *alteration* of multiple *elements* within a room or *space* may provide a cost-effective opportunity to make the entire room or *space accessible*.

EXCEPTIONS: 1. *Altered elements* or *spaces* are not required to be located on an *accessible route*, unless required by 202.4.
2. In *alterations*, where compliance with applicable provisions is *technically infeasible*, the *alteration* shall provide accessibility to the maximum extent feasible. Any *elements* or *spaces* of the *building* or

facility that are being *altered* and can be made *accessible* shall be made *accessible* within the scope of the *alteration*.

202.3.1 Prohibited Reduction in Access. An *alteration* that decreases or has the effect of decreasing the accessibility of a *building* or *facility* below the requirements for new construction at the time of the *alteration* is prohibited.

202.3.2 Extent of Application. An *alteration* of an existing *element*, *space*, or area of a *building* or *facility* shall not impose a requirement for accessibility greater than required for new construction.

202.4 Alterations Affecting Primary Function Areas. In addition to the requirements of 202.3, an *alteration* that affects or could affect the usability of or access to an area containing a primary function shall be made so as to ensure that, to the maximum extent feasible, the path of travel to the *altered* area and the rest rooms, telephones, and drinking fountains serving the *altered* area, are readily *accessible* to and usable by individuals with disabilities, unless such *alterations* are disproportionate to the overall *alterations* in terms of cost and scope as determined under criteria established by the Attorney General. In existing transportation *facilities*, an area of primary function shall be as defined under criteria established by the Secretary of the Department of Transportation or the Attorney General.

Advisory 202.4
The area of a *building* or *facility* containing the major activity for which the *building* or *facility* is intended is the primary function area. Department of Justice ADA regulations state, "*Alterations* made to provide an *accessible* path of travel to the altered area will be deemed disproportionate to the overall *alteration* when the cost exceeds 20% of the cost of the *alteration* to the primary function area." (28 CFR section 36.403 (f) (1)). See also Department of Transportation ADA regulations, which use similar concepts in the context of public sector transportation *facilities* (49 CFR section 37.43).

202.5 Alterations to Qualified Historic Buildings and Facilities. *Alterations* to a *qualified historic building or facility* shall comply with 202.3 and 202.4.

EXCEPTION: Where the State Historic Preservation Officer or Advisory Council on Historic Preservation determines that compliance with the requirements for *accessible routes*, *ramps*, *entrances*, or toilet *facilities* would threaten or destroy the historic significance of the *building* or *facility*, the exceptions for *alterations* to *qualified historic buildings* or *facilities* for that *element* shall be permitted to apply.

203 General Exceptions

203.1 General. *Sites*, *buildings*, *facilities,* and *elements* shall be exempt from this part to the extent specified by 203.

203.2 Construction Sites. Structures, *sites,* and equipment directly associated with the actual processes of construction, including, but not limited to scaffolding, bridging, materials hoists, materials

storage, or construction trailers are not required to be *accessible*. Portable toilet units provided for use exclusively by construction personnel on a construction *site* are not required to be *accessible*.

203.3 Employee Work Areas. *Employee work areas* shall be designed and constructed so that individuals with disabilities can approach, enter, and exit the *employee work areas*. In addition, visual alarm coverage shall be provided where audible alarm coverage is provided in *employee work areas*. This part does not require that *employee work areas* be constructed to permit maneuvering within the *employee work area* or be constructed or equipped to be *accessible*.

203.4 Raised Areas. Areas raised primarily for purposes of security, life safety, or fire safety, including but not limited to observation or lookout galleries, prison guard towers, fire towers, or life guard stands are not required to be *accessible* or to be served by an *accessible route*.

203.5 Limited Access Spaces. *Spaces* accessed only by ladders, catwalks, crawl *spaces*, very narrow passageways, or tunnels are not required to be *accessible*.

203.6 Equipment Spaces. *Spaces* frequented only by service personnel for maintenance, repair, or occasional monitoring of equipment are not required to be *accessible*. Such *spaces* include but are not limited to elevator pits, elevator penthouses, mechanical, electrical, or communications equipment rooms, piping or equipment catwalks, water or sewage treatment pump rooms and stations, electric substations and transformer vaults, and highway and tunnel utility *facilities*.

203.7 Single Occupant Structures. Single occupant structures accessed only by passageways below grade or elevated above standard curb height, including but not limited to toll booths that are accessed only by underground tunnels, are not required to be *accessible*.

203.8 Detention and Correctional Facilities. In detention and correctional *facilities*, access is not required in *common use* areas that are used only by inmates or detainees and security personnel and that do not serve holding cells or housing cells or rooms required to be *accessible* in accordance with 233.

203.9 Residential Facilities. In residential *facilities*, access is not required in *common use* areas that do not serve dwelling units required to be accessible by 234.

204 Protruding Objects

204.1 General. Protruding objects on *circulation paths* shall comply with 307.

205 Operable Parts

205.1 General. *Operable parts* on *accessible routes* and in *accessible* rooms and *spaces* shall comply with 309.

206 Accessible Routes

206.1 General. *Accessible routes* shall be provided in accordance with 206.

206.2 Where Required. *Accessible routes* shall be provided where required by 206.2 and shall comply with Chapter 4.

206.2.1 Site Arrival Points. *Accessible routes* shall be provided within the boundary of the *site* from public transportation stops, *accessible* parking *spaces*, passenger loading zones, and public streets or sidewalks, to the *accessible building* or *facility entrance* they serve.

EXCEPTIONS: 1. In *alterations* to *qualified historic buildings or facilities* permitted by 202.5 to use the exceptions for *alterations* to *qualified historic buildings* or *facilities*, at least one *accessible route* from a *site* arrival point to an *accessible entrance* shall be provided.
2. An *accessible route* shall not be required between *site* arrival points and the *building* or *facility entrance* if the only means of access between them is a *vehicular way* not provided for pedestrian access.

Advisory 206.2.1 Exception 2
Access from *site* arrival points may include *vehicular ways*. Where a *vehicular way*, or a portion of a *vehicular way*, is used for pedestrian travel, this exception does not apply.

206.2.2 Within a Site. *Accessible routes* shall connect *accessible buildings*, *accessible facilities*, *accessible elements*, and *accessible spaces* that are on the same *site*.

EXCEPTION: An *accessible route* is not required between *accessible buildings*, *accessible facilities, accessible elements and accessible spaces* that have as the only means of access between them, a *vehicular way* not provided for pedestrian access.

206.2.3 Multi-Level Buildings and Facilities. *Accessible routes* shall connect each level, including *mezzanines*, in multi-*level buildings* and *facilities*.

Advisory 206.2.3
While a *mezzanine* may be a change in level, it is not a *story* for purposes of determining whether a *building* or *facility* is required to have an elevator. If an elevator is required, it must serve *mezzanines*. Levels in *buildings* and *facilities* without elevators must still fully comply with this document.

EXCEPTIONS: 1. An *accessible route* is not required to levels located above or below the *accessible* level in *private buildings* or *facilities* that are less than three *stories* or that have less than 3000 square feet per *story* unless the *building or facility* is a shopping center, a shopping mall, the professional office of a health care provider, or another type of *facility* as determined by the Attorney General. In addition, Exception 1 shall not apply to a terminal, depot or other station used for specified public transportation or to an airport passenger terminal.
2. An *accessible route* is not required to levels located above or below the *accessible* level in *public buildings or facilities* that are less than three *stories* and that are not open to the public if

the level above or below the *accessible* level houses no more than five persons and is less than 500 square feet.

3. An *accessible route* is not required to levels located above or below the *accessible* level in detention and correctional *facilities* where *accessible* cells or rooms provided in accordance with 233, all *common use* areas serving such cells or rooms, and all *public use* areas are on an *accessible* route.

4. An *accessible route* is not required to levels located above or below the *accessible* level in residential *facilities* where *accessible* dwelling units complying with 234, all *common use* areas serving such dwelling units, and all *public use* areas are on an *accessible* route.

Advisory 206.2.3 Exception 4
Where *common use* areas are provided for the use of residents, it is presumed that all such *common use* areas "serve" *accessible dwelling units* unless use is restricted to residents occupying other *dwelling units*. For example, if all residents are permitted to use all laundry rooms, then all laundry rooms "serve" *accessible dwelling units*. However, if the laundry room on the first floor is restricted to use by residents on the first floor, and the second floor laundry room is for use by occupants of the second floor, then first floor *accessible* units are "served" only by laundry rooms on the first floor. In this example, an *accessible route* is not required to the second floor provided that all *accessible* units and all *common use* use areas serving them are on the first floor.

5. An *accessible route* is not required to levels located above or below the *accessible* level in multi-story *transient lodging* guest rooms provided that *spaces* complying with 806.2 are on an *accessible route* and are suitable for dual occupancy.

6. In *assembly areas* required to comply with 221, an *accessible route* is not required to serve seating where *wheelchair spaces* or designated aisle seats required to be on an *accessible route* are not provided.

7. In air traffic control towers, an *accessible route* is not required to serve the cab and the floor immediately below the cab.

8. In *alterations* to *qualified historic buildings or facilities* where an exception is permitted by 202.5, an *accessible route* from an *accessible entrance* to all publicly used *spaces* on at least the level of the *accessible entrance* shall be provided.

206.2.3.1 Stairs and Escalators in Existing Buildings. In *alterations* and *additions*, where an escalator or stair is provided where none existed previously and major structural modifications are necessary for such installation, an *accessible route* shall be provided between the levels served by the escalator or stair, unless exempted by 206.2.3.

206.2.4 Accessible Spaces and Elements. *Accessible routes* shall connect *accessible building* or *facility entrances* with all *accessible spaces* and *elements* within the *building* or *facility* which are otherwise connected by a *circulation path*.

Advisory 206.2.4
Accessible routes must connect all *spaces* and *elements* required to be *accessible* including, but not limited to, raised areas and speaker platforms.

EXCEPTIONS: 1. An *accessible route* is not required between levels where exempted by 206.2.3.
2. Vertical access to raised judges' benches or courtroom stations need not be installed provided that the required clear floor *space*, maneuvering *space*, and, if appropriate, electrical service are installed at the time of initial construction to allow future installation of a means of vertical access complying with 303.4, 206.6, or 206.7 without requiring substantial reconstruction of the *space*.

206.2.5 Restaurants and Cafeterias. In restaurants and cafeterias, an *accessible route* shall be provided to all dining areas, including raised or sunken dining areas, and outdoor seating areas.

EXCEPTIONS: 1. In *buildings or facilities* not required to provide an *accessible route* between *stories*, an *accessible route* to a *mezzanine* dining area is not required, provided that the *mezzanine* contains less than 25 percent of the total area for seating and dining and the same services are provided in the *accessible* area.
2. In *alterations*, accessibility to existing raised or sunken dining areas, or to all parts of existing outdoor seating areas is not required provided that the same services and decor are provided in an *accessible space* usable by the public and not restricted to use by people with disabilities.

206.2.6 Performance Areas. An *accessible route* shall be provided where a *circulation path* directly connects a performance area to an assembly seating area. An *accessible route* shall be provided from performance areas to ancillary areas or *facilities* used by performers. In *alterations*, where it is *technically infeasible* to alter all performance areas to be on an *accessible route*, at least one of each type of performance area shall be made *accessible*.

206.3 Location. *Accessible routes* shall coincide with or be located in the same area as a general *circulation path*. Where the *circulation path* is interior, the *accessible route* shall also be interior.

Advisory 206.3
The *accessible route* must be in the same area as the general *circulation path*. This means that *circulation paths*, such as *vehicular ways* designed for pedestrian traffic, *walks*, and unpaved paths that are designed to be routinely used by pedestrians must be *accessible* or have an *accessible route* nearby.

206.4 Entrances. *Accessible entrances* shall be provided in accordance with 206.4.

EXCEPTIONS: 1. Where an *alteration* includes *alterations* to an *entrance*, and the *building* or *facility* has an *accessible entrance*, the *altered entrance* is not required to be *accessible*, unless required by 202.4. *Signs* complying with 206.4.8 shall be provided.
2. In *alterations* to *qualified historic buildings or facilities* permitted by 202.5 to use exceptions for *alterations* to *qualified historic buildings* or *facilities,* at least one *accessible public entrance* shall be provided. Where no *public entrance* can be made *accessible*, then either an unlocked *entrance* not used by the public shall be made *accessible*; or a locked *accessible entrance* with a notification system or remote monitoring shall be provided. *Signs* complying with 206.4.8 shall be provided at the primary *entrance* and at the *accessible entrance*.

206.4.1 Parking Garage Entrances. Where direct access to a *building* or *facility* is provided for pedestrians from an enclosed parking garage, at least one direct *entrance* from the garage to the *building* shall be *accessible*.

206.4.2 Entrances from Tunnels or Elevated Walkways. Where direct access is provided for pedestrians from a pedestrian tunnel or elevated walkway to a *building* or *facility*, at least one direct *entrance* to the *building* or *facility* from each tunnel or walkway shall be *accessible*.

206.4.3 Public Entrances. In addition to *accessible entrances* required by 206.4.1 and 206.4.2, at least 50 percent of all *public entrances* shall be *accessible*. At least one *accessible entrance* shall be a *ground floor entrance*.

206.4.4 Tenant Spaces. At least one *accessible entrance* shall be provided to each tenancy in a *facility*, except as specified in 225 or 234.

206.4.5 Restricted Entrances. Where *restricted entrances* are provided to a *building* or *facility*, at least one *restricted entrance* to the *building* or *facility* shall be *accessible*.

206.4.6 Service Entrances. If a *service entrance* is the only *entrance* to a *building* or to a tenancy in a *facility*, that *entrance* shall be *accessible*.

206.4.7 Entrances for Inmates or Detainees. Where *entrances* used only by inmates or detainees and security personnel are provided at judicial *facilities,* detention *facilities,* or correctional *facilities*, at least one such *entrance* shall be *accessible*.

206.4.8 Signs. Where not all *entrances* are *accessible*, *accessible entrances* shall be identified by the International Symbol of Accessibility complying with 703.7 and directional *signs* indicating the location of the nearest *accessible entrance* shall be provided at inaccessible *entrances*. Directional *signs* shall comply with 703.4. No *signs* are required where all *entrances* are *accessible*.

Advisory 206.4.8
Where a directional *sign* is required, it should be located to minimize backtracking. In some cases, this could mean locating a *sign* at the beginning of a route, not just at the inaccessible *entrances* to a *building*.

206.5 Doors and Doorways. *Accessible* doors and doorways shall be provided in accordance with 206.5 and shall comply with 404.

206.5.1 Accessible Entrances. Each *accessible entrance* to a *building* or *facility* shall have at least one *accessible* door or doorway.

206.5.2 Accessible Rooms and Spaces. Within a *building* or *facility*, at least one door or doorway serving each *accessible* room or *space* shall be *accessible*.

206.6 Elevators. New passenger elevators shall comply with 407.2 or 407.3. Where multiple elevators are provided, each passenger elevator shall comply with 407.2 or 407.3.

EXCEPTION: Where an elevator is provided in a *building* or *facility* eligible for the exceptions to 206.2.3, the elevator shall comply with 407.2, 407.3 or 407.4.

206.6.1 Existing Elevators. *Altered elements* of existing elevators shall comply with 407.5. Such *elements* shall also be *altered* in all elevators that are programmed to respond to the same hall call control as the *altered* elevator and shall comply with the requirements of 407.5.

206.7 Wheelchair (Platform) Lifts. *Wheelchair* (platform) lifts shall be permitted as a component of an *accessible route* in new construction as permitted by 206.7 and shall comply with 408. *Wheelchair* (platform) lifts provided as a component of an *accessible route* in an existing *building* or *facility* shall comply with 408.

206.7.1 Performance Areas and Speakers' Platforms. *Wheelchair* (platform) lifts shall be permitted to provide an *accessible route* to a performance area or a speakers' platform in an assembly occupancy.

206.7.2 Wheelchair Spaces. *Wheelchair* (platform) lifts shall be permitted to comply with the *wheelchair space* dispersion and line-of-sight requirements of 221 and 802.

206.7.3 Incidental Spaces. *Wheelchair* (platform) lifts shall be permitted to provide an *accessible route* to incidental *occupiable spaces* and rooms which are not open to the public and which are occupied by five persons maximum.

206.7.4 Judicial Spaces. *Wheelchair* (platform) lifts shall be permitted to provide an *accessible route* to raised judges' benches, clerks' stations, jury boxes and witness stands or to depressed areas such as the well of a court.

206.8 Security Barriers. Security barriers including, but not limited to, security bollards and security check points shall not obstruct a required *accessible route* or *accessible means of egress*.

EXCEPTION: Where security barriers incorporate equipment such as metal detectors, fluoroscopes, or other similar devices which cannot be made *accessible*, an *accessible route* shall be provided adjacent to such security screening devices to facilitate an equivalent *circulation path*. The *circulation path* shall permit persons with disabilities passing through security barriers to

maintain visual contact with their personal items to the same extent provided others traversing the barrier.

207 Accessible Means of Egress

207.1 General. All accessible *spaces* shall be provided with not less than one *accessible means of egress*. Where more than one means of egress is required from any accessible *space*, each accessible portion of the *space* shall be served by not less than two *accessible means of egress*. *Accessible means of egress* shall comply with 409.

EXCEPTION: *Accessible means of egress* are not required in *alterations* to existing *buildings* or *facilities*.

207.2 Elevators. In *buildings* or *facilities* where a required *accessible* floor is four or more *stories* above or below a level of exit discharge, at least one required *accessible means of egress* shall be an elevator complying with 409.3.

207.3 Signs. At exit stairways and elevators serving a required *accessible space*, but not serving as an *accessible means of egress*, directional *signs* indicating the location of *accessible means of egress* shall be provided. Such *signs* shall comply with 703.4.

208 Parking Spaces

208.1 General. Where parking *spaces* are provided, *accessible* parking *spaces* shall be provided in accordance with 208.

EXCEPTION: This section does not apply to parking *spaces* used exclusively for buses, trucks, other delivery vehicles, law enforcement vehicles, or vehicular impound and motor pools where lots accessed by the public are provided with a passenger loading zone complying with 503.

208.2 Number Required. *Accessible* parking *spaces* shall be provided in accordance with Table 208.2, except as required by 208.2.1, 208.2.2, and 208.2.3, and shall comply with 502.

Table 208.2 Accessible Parking Spaces

Total Number of Parking Spaces Provided in Lot	Minimum Required Number of Accessible Parking Spaces
1 to 25	1
26 to 50	2
51 to 75	3
76 to 100	4
101 to 150	5

Table 208.2 Accessible Parking Spaces

Total Number of Parking Spaces Provided in Lot	Minimum Required Number of Accessible Parking Spaces
151 to 200	6
201 to 300	7
301 to 400	8
401 to 500	9
501 to 1000	2 percent of total
1001 and over	20, plus 1 for each 100, or fraction thereof, over 1000

208.2.1 Hospital Outpatient Facilities. Ten percent of patient and visitor parking *spaces* provided to serve hospital outpatient *facilities* shall be *accessible*.

Advisory 208.2.1

The term "outpatient facility" is not defined in this document but is intended to cover *facilities* or units that provide regular and continuing medical treatment without an overnight stay, and that are located in hospitals. Doctors' offices, independent clinics, or other *facilities* not located in hospitals are not considered hospital outpatient *facilities* for purposes of this document.

208.2.2 Rehabilitation Facilities and Outpatient Physical Therapy Facilities. Twenty percent of patient and visitor parking *spaces* provided to serve rehabilitation *facilities* and outpatient physical therapy *facilities* shall be *accessible*.

208.2.3 Residential Facilities. Parking *spaces* provided to serve residential *facilities* shall comply with 208.2.3.

208.2.3.1 Parking for Residents. Where parking serves *dwelling units*, one *accessible* parking *space* minimum shall be provided for each *dwelling unit* required to be *accessible* by 234.

208.2.3.2 Additional Spaces for Residents. Where the total parking serving *dwelling units* exceeds one parking *space* per *dwelling unit*, two percent, but not fewer than one *space*, of all the additional parking *spaces* shall be *accessible*.

208.2.3.3 Guest Parking. Where parking is provided for other than residents it shall comply with Table 208.2.

208.2.4 Van Parking Spaces. For every eight or fraction of eight *accessible* parking *spaces* required by 208.2, 208.2.1, and 208.2.3, at least one shall be a van parking *space* complying with 502.

208.3 Identification. *Accessible* parking *spaces* shall be identified by *signs* complying with 502.6.

EXCEPTIONS: 1. Where a total of five or fewer parking *spaces* are provided, identification complying with 502.6 shall not be required.
2. In residential *facilities*, where parking *spaces* are assigned to specific *dwelling units*, identification complying with 502.6 shall not be required.

208.4 Location. Parking *facilities* shall comply with 208.4.

Advisory 208.4
On any *site* with multiple lots, the number of *accessible* parking *spaces* is calculated lot-by-lot.

208.4.1 General. *Accessible* parking *spaces* serving a particular *building* or *facility* shall be located on the shortest *accessible route* from adjacent parking to an *accessible entrance*. In *buildings* or *facilities* with multiple *accessible entrances* with adjacent parking, *accessible* parking *spaces* shall be dispersed and located on the shortest *accessible route* to the *accessible entrances*. In parking *facilities* that do not serve a particular *building or facility*, *accessible* parking *spaces* shall be located on the shortest *accessible route* to an *accessible* pedestrian *entrance* of the parking *facility*.

EXCEPTIONS: 1. All van parking *spaces* shall be permitted to be grouped on one level of a parking structure.
2. *Accessible* parking *spaces* shall be permitted to be located in different lots if equivalent or greater accessibility is provided in terms of distance from an *accessible entrance*, user cost, and user convenience.

208.4.2 Residential Facilities. In residential *facilities*, required *accessible spaces* shall be dispersed throughout all types of parking provided for the *dwelling units* required to be *accessible* by 234.

Advisory 208.4.2
In residential *facilities*, certain *accessible* parking *spaces* may not serve particular *accessible dwelling units*. These *spaces* also should be dispersed.

EXCEPTION: Parking *spaces* for *dwelling units* required to be *accessible* shall not be required to be dispersed throughout all types of parking if equivalent or greater accessibility, in terms of distance from an *accessible entrance*, user cost and user convenience is provided.

209 Passenger Loading Zones

209.1 General. Where passenger loading zones are provided, one passenger loading zone in every continuous 100 linear feet (30 m) maximum of loading zone *space* shall comply with 503.

209.2 Medical Facilities. A passenger loading zone shall be provided at an *accessible entrance* to licensed medical and long-term care *facilities.*

209.3 Valet Parking. Valet parking services shall provide a passenger loading zone.

210 Stairways

210.1 General. Interior and exterior stairs that are part of a means of egress shall comply with 504.

EXCEPTION: 1. In detention and correctional *facilities*, stairs not located in *public use* areas shall not be required to comply with the requirements of this section.
2. In *alterations*, stairs between levels that are connected by an *accessible route* are not required to comply with 504 except that handrails complying with 505 shall be provided.

211 Drinking Fountains and Water Coolers

211.1 General. Where drinking fountains or water coolers are provided, they shall be provided in accordance with 211.

211.1.1 Single Installation. Only one drinking fountain or water cooler shall not be permitted on a *site*, on a floor, or within a secured area.

EXCEPTION: Hi-lo drinking fountains or water coolers complying with 602 shall be permitted.

211.1.2 Multiple Installations. Where more than one drinking fountain or water cooler is provided on a *site*, on a floor, or within a secured area, fifty percent shall comply with 602.1 through 602.6. The remainder of the drinking fountains or water coolers on a *site*, on a floor, or within a secured area shall comply with 602.7.

EXCEPTION: Where three or more drinking fountains or water coolers are provided fifty percent shall be permitted to be calculated to be fifty percent plus or minus one.

212 Sinks, Kitchens, Kitchenettes, and Wet Bars

212.1 General. Sinks, kitchens, kitchenettes, and wet bars shall comply with 212.1.

212.1.1 Kitchens, Kitchenettes and Wet Bars. Where kitchens, kitchenettes, or wet bars are provided, they shall comply with 804.

EXCEPTIONS: 1. In medical care *facilities*, this section does not apply to patient or resident sleeping rooms that are not required to be *accessible* in accordance with 223.2, 223.3, or 223.4.

2. In *transient lodging facilities*, this section does not apply to guest rooms that are not required to be *accessible* in accordance with 224.2.
3. In detention and correctional *facilities* this section does not apply to housing cells not required to be *accessible* in accordance with 233.2.
4. In residential *facilities*, this section does not apply to *dwelling units* that are not required to be *accessible*.

212.1.2 Sinks. Where sinks are provided, at least 5 percent, but not less than one of each type provided in each *accessible* room or *space* shall comply with 606.

EXCEPTION: Mop or service sinks are not required to be *accessible*.

213 Toilet and Bathing Facilities

213.1 General. Where toilet *facilities* and bathing *facilities* are provided, they shall comply with 213. Where toilet *facilities* and bathing *facilities* are provided on an in*accessible* level, toilet *facilities* and bathing *facilities* shall also be provided on an *accessible* level.

213.2 Toilet and Bathing Rooms. Where toilet rooms are provided, each toilet room shall comply with 603. Where bathing rooms are provided, each bathing room shall comply with 603.

Advisory 213.2
The guidelines allow the use of unisex (or single-user) toilet rooms in *alterations* when technical infeasibility can be demonstrated. Unisex toilet rooms offer benefits to people who use personal care assistants. For this reason, it is advantageous to install unisex toilet rooms in addition to *accessible* single-sex toilet rooms in new *facilities*.

EXCEPTIONS: 1. In *alterations* where it is *technically infeasible* to comply with 603, altering existing toilet or bathing rooms is not required where a single unisex toilet room or bathing room complying with 213.2.1 is provided and located in the same area and on the same floor as existing in*accessible* toilet or bathing rooms.
2. Where exceptions for *alterations* to *qualified historic buildings* or *facilities* are permitted by 202.5, and toilet rooms are provided, not less than one toilet room complying with 603 or a unisex room complying with 213.2.1 shall be provided.
3. Where multiple single user portable toilet or bathing units are clustered at a single location, at least 5 percent, but not less than one toilet unit or bathing unit at each cluster shall comply with 603. *Accessible* units shall be identified by the International Symbol of Accessibility complying with 703.7.
4. Where multiple single user toilet rooms are clustered at a single location and contain fixtures in excess of the minimum required number of plumbing fixtures for the occupancy, at least 5 percent, but not less than one toilet room for each use at each cluster shall comply with 603. *Accessible* toilet rooms shall be identified by the International Symbol of Accessibility complying with 703.7.
5. In medical care *facilities*, this section does not apply to toilet *facilities* and bathing *facilities* that are part of patient or resident sleeping rooms not required to be *accessible* in accordance with 223.

6. In *transient lodging facilities*, this section does not apply to toilet *facilities* and bathing *facilities* that are part of guest rooms not required to be *accessible* in accordance with 224.
7. In detention and correctional *facilities*, this section does not apply to toilet or bathing *facilities* that do not serve holding cells or housing cells required to be *accessible* in accordance with 233.
8. In residential *facilities*, this section does not apply to toilet *facilities* and bathing *facilities* that are part of *dwelling units* that are not required to be *accessible.*

213.2.1 Unisex Toilet and Bathing Rooms. A unisex toilet room shall comply with 603, shall contain one water closet and one lavatory, and the door shall have a privacy latch. A unisex bathing room shall comply with 603 and shall contain at least one shower or bathtub.

213.2.2 Signs. Where existing toilet or bathing rooms are *altered* and not made *accessible*, directional *signs* indicating the location of the nearest *accessible* toilet or bathing room within the *facility* shall be provided. Such *signs* shall comply with 703.4 and shall include the International Symbol of Accessibility complying with 703.7. Where existing toilet or bathing rooms are *altered* and not made *accessible*, the *accessible* toilet or bathing room shall be identified by the International Symbol of Accessibility complying with 703.7.

213.3 Fixtures and Accessories. Plumbing fixtures and accessories provided in toilet or bathing rooms required to be *accessible* by 213.2 shall comply with 213.3.

213.3.1 Toilet Compartments. Where toilet compartments are provided, at least one shall be a *wheelchair accessible* compartment complying with 604.8.1. Where six or more toilet compartments are provided, a non-wheelchair accessible compartment complying with 604.8.2 shall be provided in addition to the compartment complying with 604.8.1. Water closets in such compartments shall comply with 604.

213.3.2 Water Closets. Where water closets are provided, but are not in toilet compartments, at least one shall comply with 604.

213.3.3 Urinals. Where urinals are provided, at least one shall comply with 605.

213.3.4 Lavatories. Where lavatories are provided, at least one shall comply with 606. Where only one *accessible* lavatory is provided, it shall not be located in a toilet compartment.

213.3.5 Mirrors. Where mirrors are provided, at least one shall comply with 603.3.

213.3.6 Operable Parts and Dispensers. Where *operable parts*, dispensers, receptacles or other equipment are provided, at least one of each type shall comply with 309.

213.3.7 Bathing Facilities. Where bathtubs or showers are provided, at least one bathtub complying with 607 or at least one shower complying with 608 shall be provided.

214 Laundry Equipment

214.1 General. Where washing machines or clothes dryers are provided in *spaces* required to be *accessible*, *accessible* washing machines and clothes dryers complying with 611 shall be provided in accordance with 214.

214.2 Washing Machines. Where three or fewer washing machines are provided, at least one shall be *accessible*. Where more than three washing machines are provided, at least two shall be *accessible*.

214.3 Dryers. Where three or fewer clothes dryers are provided, at least one shall be *accessible*. Where more than three clothes dryers are provided, at least two shall be *accessible*.

215 Emergency Alarm Systems

215.1 Fire Alarms. Where fire alarm systems are provided in *public use* or *common use* areas, the alarm shall provide a system with both audible and visual signals complying with 702. Guest rooms required by 224 to have *accessible* alarms shall comply with 702.3.6.

Advisory 215.1
Unlike audible alarms, visual alarms must be located within the *space* they serve so that the signal is visible.

215.2 Other Emergency Alarm Systems. Where emergency warning systems other than for fire are provided in *public-use* or *common-use* areas, a system with both audible and visual signals shall be provided.

Advisory 215.2
Facility alarm systems (other than fire alarm systems) that do not instruct occupants to evacuate the *facility*, such as those used for tornado warnings and other emergencies, must provide both audible and visual notification, but are not held to the technical criteria for alarms in section 702. Such alarms need to be differentiated in their signal from fire alarms systems.

216 Signs

216.1 General. *Signs* shall be provided in accordance with 216 and shall comply with 703.

EXCEPTION: In detention and correctional *facilities*, *signs* not located in *public use* areas shall not be required to comply.

216.2 Permanent Designations. Where exterior *signs* are provided as permanent designations of permanent interior rooms and *spaces* at the door to the *space* they serve, the *signs* shall be *tactile* and shall comply with 703.2. Where interior *signs* are provided as permanent designations of permanent

interior rooms and *spaces*, the *signs* shall be *tactile* and shall comply with 703.2. Where *pictograms* are provided as permanent designations of permanent interior rooms and *spaces*, the *pictograms* shall comply with 703.6 and shall have *tactile* text descriptors complying with 703.2.

Advisory 216.2
"Permanent designations" label interior rooms or *spaces* where the designation is not likely to change over time. Examples include, interior *signs* labeling restrooms, room and floor numbers or letters, and room names. *Tactile* text descriptors are required for *pictograms* that are provided to label or identify a permanent room or *space*. *Pictograms* that provide information about a room or *space*, such as "no smoking," occupant logos, and accessibility designations, are not required to have text descriptors.

EXCEPTION: This requirement shall not apply to *signs* used to designate *building* addresses or *building* or *facility* names.

216.3 Directional and Informational Signs. *Signs* that provide direction to or information about permanent interior *spaces* and *facilities* of the *site* shall comply with 703.4.

Advisory 216.3
Information about a permanent room or *space* includes rules of conduct, occupant load, and similar *signs*. *Signs* providing direction to permanent rooms or *spaces* include those that identify egress routes.

EXCEPTION: *Building* directories, menus, and temporary *signs* are not required to comply with 703.4.

216.4 Exit Doors. Exit doors shall be identified by *tactile signs* complying with 703.2.

217 Telephones

217.1 General. Where coin-operated public pay telephones, coinless public pay telephones, public *closed-circuit telephones*, or other types of public telephones are provided, *accessible* public telephones shall be provided in accordance with 217 for each type of public telephone provided. For purposes of this section, a bank of telephones shall be considered two or more adjacent telephones.

217.2 Wheelchair Accessible Telephones. Where public telephones are provided, *wheelchair accessible* telephones complying with 704.2 shall be provided in accordance with Table 217.2.

Table 217.2 Wheelchair Accessible Telephones

Number Of Telephones Provided on a Floor or Level	Minimum Required Number of Wheelchair Accessible Telephones
1 or more single units	1 per floor or level
1 bank	1 per floor or level
2 or more banks	1 per bank[1]

1. At least one telephone per floor shall provide a forward approach complying with 704.2.1.2, except for exterior installations where dial tone first service is available.

217.3 Volume Controls. All *wheelchair accessible* telephones required by 217.2 and 25 percent, but not less than one, of all other public telephones provided shall have volume control complying with 704.3. Such telephones shall be identified by *signs* containing *pictograms* of a telephone handset with radiating sound waves complying with 703.7.

EXCEPTION: *Pictograms* are not required where all public telephones have volume control.

217.4 TTYs. *TTYs* complying with 704.4 shall be provided in accordance with 217.4.

Advisory 217.4

Separate requirements are provided based on the number of public pay telephones provided at a bank of telephones, within a floor, a *building*, or on a *site*. One *TTY* can be used to satisfy more than one of these requirements. For example, a *TTY* required for a *building* can be used to satisfy the requirement for at least one *TTY* on a *site*. Consideration should be given to phone systems that can accommodate both digital and analog transmissions for compatibility with digital and analog *TTYs*.

217.4.1 Bank Requirement. Where four or more public pay telephones are provided at a bank of telephones, at least one public *TTY* shall be provided at that bank.

EXCEPTION: *TTYs* are not required at banks of telephones located within 200 feet (61 m) of, and on the same floor as, a bank containing a public *TTY*.

217.4.2 Floor Requirement. *TTYs* in *public buildings* shall be provided in accordance with 217.4.2.1. *TTYs* in *private buildings* shall be provided in accordance with 217.4.2.2.

217.4.2.1 Public Buildings. Where at least one public pay telephone is provided on a floor of a *public building*, at least one public *TTY* shall be provided on that floor.

217.4.2.2 Private Buildings. Where four or more public pay telephones are provided on a floor of a *private building*, at least one public *TTY* shall be provided on that floor.

217.4.3 Building Requirement. *TTYs* in *public buildings* shall be provided in accordance with 217.4.3.1. *TTYs* in *private buildings* shall be provided in accordance with 217.4.3.2.

217.4.3.1 Public Buildings. Where at least one public pay telephone is provided in a *public use* area of a *public building*, at least one public *TTY* shall be provided in the *building* in a *public use* area.

217.4.3.2 Private Buildings. Where four or more public pay telephones are provided in a *private building*, at least one public *TTY* shall be provided in the *building*.

217.4.4 Site Requirement. Where four or more public pay telephones are provided on a *site*, at least one public *TTY* shall be provided on the *site*.

217.4.5 Rest Stops, Emergency Roadside Stops, and Service Plazas. Where a public pay telephone is provided at a public rest stop, emergency roadside stop or service plaza, at least one public *TTY* shall be provided.

217.4.6 Hospitals. Where a public pay telephone is provided serving a hospital emergency room, hospital recovery room, or hospital waiting room, at least one public *TTY* shall be provided at each such location.

217.4.7 Transportation Facilities. Transportation *facilities* shall be provided with *TTYs* in accordance with 1003.2.6 and 1004.2, in addition to the *TTYs* required by 217.4.

217.4.8 Detention and Correctional Facilities. In detention and correctional *facilities*, where a public pay telephone is provided in a secured area used only by detainees or inmates and security personnel, then at least one *TTY* shall be provided in at least one such area.

217.4.9 Signs. Identification and directional *signs* shall be provided in accordance with 217.4.9.

217.4.9.1 Identification Signs. Public *TTYs* shall be identified by the International Symbol of *TTY* complying with 703.7.

217.4.9.2 Directional Signs. Directional *signs* indicating the location of the nearest public *TTY* shall be provided at all banks of public pay telephones not containing a public *TTY*. In addition, where *signs* provide direction to public pay telephones, they shall also provide direction to public *TTYs*. Directional *signs* shall comply with 703.4 and shall include the International Symbol of *TTY* complying with 703.7.

217.5 Shelves for Portable TTYs. Where a bank of telephones in the interior of a *building* consists of three or more public pay telephones, at least one public pay telephone at the bank shall be provided with a shelf and an electrical outlet in accordance with 704.5.

EXCEPTIONS: 1. This requirement does not apply to the secured areas of detention and correctional *facilities* where shelves and outlets are prohibited for purposes of security or safety.
2. The shelf and electrical outlet shall not be required at a bank of telephones with a *TTY*.

218 Transportation Facilities

218.1 General. Transportation *facilities* shall comply with Chapter 10.

219 Assistive Listening Systems

219.1 General. Assistive listening systems shall be provided in accordance with 219 and shall comply with 706.

219.2 Required Systems. In each *assembly area* where audible communication is integral to the use of the *space*, an assistive listening system shall be provided.

EXCEPTION: Other than in courtrooms, this requirement shall not apply where there is no audio amplification.

219.3 Receivers. Receivers complying with 706.3 shall be provided for assistive listening systems in accordance with Table 219.3. Twenty five percent minimum of receivers, but not less than two, shall be hearing-aid compatible in accordance with 706.4.

Table 219.3 Receivers for Assistive Listening Systems

Capacity of Seating in Assembly Area	Minimum Required Number of Receivers	Minimum Number of Required Receivers Required to be Hearing-aid Compatible
50 or less	2	2
51 to 200	2 plus 1 per 25 seats over 50 seats[1]	2
201 to 500	2 plus 1 per 25 seats over 50 seats[1]	1 per 4 receivers[1]
501 to 1000	20 plus 1 per 33 seats over 500 seats[1]	1 per 4 receivers[1]
1001 to 2000	35 plus 1 per 50 seats over 1000 seats[1]	1 per 4 recievers[1]
2001 and over	55 plus 1 per 100 seats over 2000 seats[1]	1 per 4 receivers[1]

1. or fraction thereof

219.4 Signs. Where assistive listening systems are provided, *signs* shall be provided to inform patrons of the availability of the system. The *signs* shall be located at ticket offices or windows, where ticket offices or windows are provided. The *signs* shall comply with 703.4 and shall include the International Symbol of Access for Hearing Loss complying with 703.7.

220 Automatic Teller Machines and Fare Machines

220.1 General. Where automatic teller machines or self-service fare vending, collection, or adjustment machines are provided, at least one machine of each type at each location where such machines are provided shall comply with 707. Where bins are provided for envelopes, waste paper, or other purposes, at least one of each type shall comply with 905.

221 Assembly Seating

221.1 General. In a motion picture house, theater, concert hall, stadium, arena, auditorium, convention center, lecture hall, courtroom, legislative chamber, public meeting room, hearing room, or similar *assembly area* that contains seating, *wheelchair spaces*, readily removable companion seats, and designated aisle seats shall be provided and shall comply with 221 and 802 in each type of seating area.

221.2 Wheelchair Spaces. *Wheelchair spaces* shall be provided in all *facilities* identified in 221.1 and in each luxury box, club box, and suite within these *facilities*. *Wheelchair spaces* shall be integrated throughout these seating areas.

221.2.1 Number. *Wheelchair spaces* shall be provided in accordance with Table 221.2.1.

Table 221.2.1 Number of Wheelchair Spaces

Number of Seats[1]	Minimum Number of Wheelchair Spaces Required
4 to 25	1
26 to 50	2
51 to 150	4
151 to 300	5
301 to 500	6
501 and over	6, plus 1 for each 100, or fraction thereof, over 500

1. installed seats plus required *wheelchair spaces*

221.3 Readily Removable Companion Seats. One readily removable companion seat complying with 802.7 shall be provided for each *wheelchair space*. Each required readily removable companion seat

shall provide an additional *wheelchair space* complying with 802.1, 802.2, 802.3, 802.4, 802.5, and 802.9 when removed.

EXCEPTION: 1. Existing companion seats shall be permitted to be fixed and shall not be required to provide *wheelchair spaces*.
2. Companion seats shall be permitted to be fixed and shall not be required to provide *wheelchair spaces* where the seating capacity is 300 or fewer.

221.4 Designated Aisle Seats. Aisle seats complying with 802.8 shall be provided in all *assembly areas*. *Signs* notifying patrons of the availability of such seats shall be posted at the ticket office.

EXCEPTION: Designated aisle seats are not required in luxury boxes, club boxes, or suites.

221.4.1 Number. One designated aisle seat complying with 802.8 per 100 seats, or fraction thereof shall be provided.

221.4.2 Location. At least one of each four required designated aisle seats shall be located on an *accessible route*. All other required designated aisle seats shall be located not more than two rows from an *accessible route* serving such seats.

221.5 Vertical Access. Where *wheelchair spaces* or designated aisle seats share a common *accessible route* that includes vertical access by means of elevators or platform lifts, elevators or platform lifts shall be provided in such number, capacity, and speed as to provide a level of service equivalent to that provided in the same seating area to patrons who can use stairs or other means of vertical access.

222 Dressing, Fitting, and Locker Rooms

222.1 General. Where dressing rooms, fitting rooms, or locker rooms are provided, at least 5 percent, but not less than one, of each type of use in each cluster provided shall comply with 803.

EXCEPTION: In *alterations*, where it is *technically infeasible* to provide *accessible* rooms in accordance with 222.1, one room for each sex on each level shall be *accessible*. Where only unisex rooms are provided, an *accessible* unisex room shall be permitted.

223 Medical Care Facility Patient or Resident Sleeping Rooms

223.1 General. In licensed medical and long-term care *facilities* where people receive physical or medical treatment or care and where the period of stay exceeds twenty-four hours, *accessible* patient or resident sleeping rooms shall be provided in accordance with 223 and shall comply with 805.

223.1.1 Alterations. Where sleeping rooms are *altered* or *added*, the requirements of 223 shall apply only to the sleeping rooms being *altered* or *added* until the number of *accessible* sleeping rooms complies with the minimum number required for new construction.

Advisory 223.1.1
In *alterations* and *additions,* the minimum required number is based on the total number of sleeping rooms altered or added instead of on the total number of sleeping rooms provided in a *facility.* As a *facility* is altered over time, *accessible* sleeping rooms may be dispersed among patient care areas such as pediatrics, cardiac care, maternity, and other units. In this way, people with disabilities may have access to the full-range of services provided by a medical care *facility.*

223.2 Hospitals. In general purpose hospitals, psychiatric *facilities* and detoxification *facilities*, at least 10 percent, but not less than one, of the patient sleeping rooms shall be *accessible*.

223.3 Rehabilitation Facilities. In hospitals and rehabilitation *facilities* that specialize in treating conditions that affect mobility, and in units within hospitals and rehabilitation *facilities* which specialize in treating conditions that affect mobility, 100 percent of the patient sleeping rooms shall be *accessible*.

Advisory 223.3
Conditions that affect mobility include conditions requiring the use or assistance of a brace, cane, crutch, prosthetic device, *wheelchair*, or powered mobility aid; arthritic, neurological, or orthopedic conditions that severely limit one's ability to walk; respiratory diseases and other conditions which may require the use of portable oxygen; and cardiac conditions that impose significant functional limitations. *Facilities* that may provide, but that do not specialize, in the treatment of such conditions, such as general rehabilitation hospitals, are not subject to this requirement but are subject to section 223.2.

223.4 Long Term Care Facilities. In long term care *facilities*, at least 50 percent, but not less than one, of the resident sleeping rooms shall be *accessible*.

224 Transient Lodging Guest Rooms

224.1 General. *Transient lodging facilities* shall provide guest rooms in accordance with 224.

EXCEPTION: This section does not apply to an establishment that is located within a *building* that contains not more than five rooms for rent or hire and that is actually occupied by the proprietor of such establishment as the residence of such proprietor.

224.1.1 Alterations. Where guest rooms are *altered* or *added*, the requirements of 224 shall apply only to the guest rooms being *altered* or *added* until the number of *accessible* guest rooms complies with the minimum number required for new construction.

Advisory 224.1.1
In *alterations* and *additions*, the minimum required number of *accessible* guest rooms is based on the total number of guest rooms altered or added instead of the total number of guest rooms provided in a *facility*. Typically, each *alteration* of a *facility* is limited to a particular portion of the *facility*. When *accessible* guest rooms are added as a result of subsequent *alterations*, compliance with 224.5 is likely to be achieved.

224.1.2 Guest Room Doors and Doorways. *Entrance* and passage doors and doorways into and within all guest rooms shall provide clear width complying with 404.2.3.

Advisory 224.1.2
Because of the social interaction that often occurs in lodging *facilities*, an *accessible* clear opening width is required for doors and doorways to and within all guest rooms, including those not required to be *accessible*. This applies to all doors, including bathroom doors, that allow full passage. Other requirements for doors and doorways in section 404 do not apply to guest rooms not required to be *wheelchair accessible*.

224.2 Accessible Guest Rooms. In *transient lodging facilities*, *accessible* guest rooms shall be provided in accordance with Table 224.2 and shall comply with 806.2

Table 224.2 Accessible Guest Rooms

Total Number of Guest Rooms Provided	Minimum Required Number of Accessible Rooms Without Roll-In Showers	Minimum Required Number of Accessible Rooms With Roll-In Showers	Total Number of Required Accessible Rooms
1 to 25	1	0	1
26 to 50	2	0	2
51 to 75	3	1	4
76 to 100	4	1	5
101 to 150	5	2	7
151 to 200	6	2	8

Table 224.2 Accessible Guest Rooms

Total Number of Guest Rooms Provided	Minimum Required Number of Accessible Rooms Without Roll-In Showers	Minimum Required Number of Accessible Rooms With Roll-In Showers	Total Number of Required Accessible Rooms
201 to 300	7	3	10
301 to 400	8	4	12
401 to 500	9	4	13
501 to 1000	2 percent of total	1 percent of total	3 percent of total
1001 and over	20 plus 1 for each 100, or fraction thereof, over 1000	10 plus 1 for each 100, or fraction thereof, over 1000	30 plus 2 for each 100, or fraction thereof, over 1000

224.3 Accessible Beds. In rooms or *spaces* having four or more beds, the number of beds in the room or *space* required to have clear floor *space* complying with 806.2.3 shall comply with Table 224.3.

Table 224.3 Accessible Beds

Total Number of Beds in a Guest Room	Minimum Required Number of Accessible Beds
4 to 25	1
26 to 50	2
51 to 75	4
76 to 100	5
101 to 150	7
151 to 200	8
201 to 300	10
301 to 400	12
401 to 500	13
501 to 1000	3 percent of total
1001 and over	30 plus 2 for each 100, or fraction thereof, over 1000

224.4 Communication Features. In *transient lodging facilities*, at least fifty percent, but not less than one, of the total number of guest rooms shall have *accessible* communication features complying with 806.3.

224.5 Dispersion. Fifty percent, but not less than one, of the guest rooms required to comply with 806.2 shall also comply with 806.3. Guest rooms required to comply with 806.2 and guest rooms required to comply with 806.3 shall be dispersed among the various classes of guest rooms and shall provide choices of types of rooms, types of beds, and other amenities comparable to the choices provided to other guests. Where the minimum number of rooms or beds required to be *accessible* is not sufficient to allow for complete dispersion, rooms or beds shall be dispersed in the following priority: room type, bed type, and amenities.

Advisory 224.5
Factors to be considered in providing an equivalent range of options may include, but are not limited to, room size, bed size, cost, view, bathroom fixtures such as hot tubs and spas, smoking and nonsmoking, the number of beds, and the number of rooms provided.

225 Self-Service Storage Facilities

225.1 General. *Self-service storage facilities* shall provide *accessible* individual, self-storage *spaces* in accordance with Table 225.1.

Table 225.1 Accessible Self-Service Storage Facilities

Total Spaces in Facility	Minimum Number of Required Accessible Spaces
1 to 200	5 percent but not less than 1
201 and over	10, plus 2 percent of total number of units over 200

225.2 Dispersion. *Accessible* individual, self-service storage *spaces* shall be dispersed throughout the various classes of *spaces* provided. Where more classes of *spaces* are provided than the number of required *accessible spaces*, the number of *accessible spaces* shall not be required to exceed that required by Table 225.1. *Accessible spaces* shall be permitted to be dispersed in a single *building* of a multi-building *facility*.

226 Dining Surfaces and Work Surfaces

226.1 General. Where dining surfaces and work surfaces, are provided in *accessible spaces*, at least five percent, but not less than one, of the seating and standing *spaces* at the dining surfaces and work surfaces in a room or *space* shall comply with 902.

226.2 Dispersion. *Accessible* dining surfaces and work surfaces shall be distributed throughout the *space* or *facility* containing such *elements*.

227 Sales and Service Counters

227.1 General. Where sales or service counters are provided, they shall be *accessible* in accordance with 227.

227.2 Check-Out Aisles. Where check-out aisles are provided, *accessible* check-out aisles shall be provided in accordance with Table 227.2. Where check-out aisles serve different functions, at least one *accessible* check-out aisle shall be provided for each function. Where check-out aisles are dispersed throughout the *building* or *facility*, *accessible* check-out aisles also shall be dispersed. Check-out aisles required to be *accessible* shall comply with 904.3.

Table 227.2 Accessible Check-Out Aisles

Total Check-Out Aisles of Each Function	Minimum Number of Accessible Check-Out Aisles of Each Function
1 to 4	1
5 to 8	2
9 to 15	3
16 and over	3, plus 20 percent of additional aisles

EXCEPTION: Where check-out aisles are *altered* in *facilities,* at least one of each check-out aisle serving each function shall be made *accessible* until the number of *accessible* check-out aisles complies with 227.2.

227.2.1 Identification. *Accessible* check-out aisles shall be identified by the International Symbol of Accessibility complying with 703.7, unless all check-out aisles in the *facility* are *accessible.* The *sign* shall be above the check-out aisle in the same location as the check-out aisle number or type of check-out identification.

227.3 Point of Sales and Service Counters. Where point of sales and service counters are provided for sales or distribution of goods or services, at least one of each type provided shall comply with 904.4.

Where such counters are dispersed throughout the *building* or *facility*, the *accessible* counters also shall be dispersed.

Advisory 227.3
Types of counters that provide different services in the same *facility* include, but are not limited to, order, pick-up, express, and returns. One continuous counter can be used to provide different types of service. For example, order and pick-up are different services. It would not be acceptable to provide access only to the part of the counter where orders are taken when orders are picked-up at a different location on the same counter. Both the order and pick-up section of the counter must be *accessible*.

227.4 Food Service Lines. Food service lines shall comply with 904.5. Where self-service shelves are provided, at least 50 percent, but not less than one, of each type provided shall comply with 308.

227.5 Queues and Waiting Lines. Queues and waiting lines servicing *accessible* counters or check-out aisles shall comply with 403.

228 Storage

228.1 General. Where storage *elements* are provided in *accessible spaces*, at least one of each type shall comply with 905.

Advisory 228.1
Fixed or built-in storage *elements* include, but are not limited to, closets, cabinets, shelves, and drawers.

228.2 Lockers. Where lockers are provided in *accessible spaces*, at least five percent, but not less than one, of each type shall comply with 905.

228.3 Self-Service Shelving. Self-service shelves shall be located on an *accessible route* complying with 402. Self-service shelving shall not be required to comply with reach range provisions of 308.

Advisory 228.3
Self-service shelves include, but are not limited to, library, store, or post office shelves.

228.4 Coat Hooks and Folding Shelves. Where coat hooks or folding shelves are provided in in*accessible* toilet rooms, toilet compartments, or in dressing, fitting or locker rooms, at least one of each type shall be provided in *accessible* toilet rooms, toilet compartments or dressing, fitting and locker rooms.

229 Depositories, Vending Machines, Change Machines, and Mail Boxes

229.1 Depositories, Vending Machines, and Change Machines. Where provided, at least one of each type of depository, vending machine, and change machine shall comply with 309.

Advisory 229.1
Depositories include, but are not limited to, night receptacles in banks, post offices, video stores, and libraries.

EXCEPTION: Drive-up-only depositories shall not be required to comply with this section.

229.2 Mail Boxes. Where *mail boxes* are provided in an interior location, at least 5 percent, but not less than one, of each type shall comply with 309. In residential *facilities*, where *mail boxes* are provided for each *dwelling unit*, *mail boxes* complying with 309 shall be provided for each *dwelling unit* required to be *accessible* by 234.1.1.

230 Windows

230.1 Windows. Where glazed openings are provided in *accessible* rooms or *spaces* for operation by the occupants, at least one opening shall comply with 309. In *accessible* rooms or *spaces,* each glazed opening required by the *administrative authority* to be operable shall comply with 309.

231 Two-Way Communication Systems

231.1 General. Where a two-way communication system is provided to gain admittance to a *building* or *facility* or to restricted areas within a *building* or *facility*, the system shall comply with 708.

232 Judicial Facilities

232.1 General. Judicial *facilities* shall comply with 232.

232.2 Courtrooms. Each courtroom shall comply with 232.2.

232.2.1 Raised or Depressed Areas. Where provided, areas that are raised or depressed and accessed by *ramps* or *wheelchair* (platform) lifts with entry *ramps* shall provide unobstructed turning *space* complying with 304.

232.2.2 Jury Boxes and Witness Stands. Each jury box and witness stand shall have, within its defined area, clear floor *space* complying with 305.

EXCEPTION: In *alterations*, *accessible wheelchair spaces* are not required to be located within the defined area of raised jury boxes or witness stands and shall be permitted to be located outside these *spaces* where *ramp* or lift access poses a hazard by restricting or projecting into a *means of egress* required by the appropriate *administrative authority*.

232.2.3 Judges' Benches and Courtroom Stations. Judges' benches, clerks' stations, bailiffs' stations, deputy clerks' stations, court reporters' stations and litigants' and counsel stations shall comply with 902.

232.3 Holding Cells. Where provided, central holding cells and court-floor holding cells shall comply with 232.3.

232.3.1 Central Holding Cells. Where separate central holding cells are provided for adult male, juvenile male, adult female, or juvenile female, one of each type shall comply with 807. Where central-holding cells are provided and are not separated by age or sex, at least one cell complying with 807.2 shall be provided.

232.3.2 Court-Floor Holding Cells. Where separate court-floor holding cells are provided for adult male, juvenile male, adult female, or juvenile female, each courtroom shall be served by one cell of each type complying with 807. Where court-floor holding cells are provided and are not separated by age or sex, courtrooms shall be served by at least one cell complying with 807.2. Cells may serve more than one courtroom.

232.4 Visiting Areas. Visiting areas shall comply with 232.4.

232.4.1 Cubicles and Counters. At least five percent, but not less than one, of cubicles shall comply with 902 on both the visitor and detainee sides. Where counters are provided, at least one shall comply with 904.4.2 on both the visitor and detainee sides.

EXCEPTION: This requirement shall not apply to the detainee side of cubicles or counters at non-contact visiting areas not serving *accessible* holding cells.

232.4.2 Partitions. Solid partitions or security glazing that separate visitors from detainees shall comply with 904.6.

233 Detention and Correctional Facilities

233.1 General. *Buildings*, *facilities*, or portions thereof, in which people are detained for penal or correction purposes, or in which the liberty of the inmates is restricted for security reasons shall comply with 233.

Advisory 233.1
Detention *facilities* include, but are not limited to, jails, detention centers, and holding cells in police stations. Correctional *facilities* include, but are not limited to, prisons, reformatories, and correctional centers.

233.2 General Holding Cells and General Housing Cells or Rooms. *Accessible* general holding cells and *accessible* general housing cells or rooms shall be provided in accordance with 233.2.

Advisory 233.2
Accessible cells or rooms should be dispersed among different levels of security, housing categories, and holding classifications (e.g., male/female and adult/juvenile) to facilitate access. Many detention and correctional *facilities* are designed so that certain areas (e.g., "shift" areas) can be adapted to serve as different types of housing according to need. For example, a shift area serving as a medium-security housing unit might be redesignated for a period of time as a high-security housing unit to meet capacity needs. Placement of *accessible* cells or rooms in shift areas may allow additional flexibility in meeting requirements for dispersion of *accessible* cells or rooms.

EXCEPTION: *Alterations* to cells and rooms shall not be required to comply except to the extent determined by the Attorney General.

233.2.1 Accessible Cells or Rooms. At least two percent, but not less than one, of the total number of cells or rooms in a *facility* shall comply with 807.2.

233.2.2 Accessible Beds. In cells or rooms having four or more beds, the number of beds in the cell or room required to have clear floor *space* complying with 807.2 shall comply with Table 224.3.

233.2.3 Communication Features. At least two percent, but not less than one, of the total number of general holding cells and general housing cells or rooms equipped with audible emergency alarm systems or permanently installed telephones within the cell or room shall comply with 807.3.

233.2.4 Dispersion. Fifty percent, but not less than one, of the cells or rooms required to comply with 807.2 shall also comply with 807.3.

233.3 Special Holding Cells and Special Housing Cells or Rooms. Where special holding cells or special housing cells or rooms are provided, at least one serving each purpose shall comply with 807.2. Cells or rooms subject to this requirement include, but are not limited to those used for purposes of orientation, protective custody, administrative or disciplinary detention or segregation, detoxification, and medical isolation.

EXCEPTIONS: 1. Cells or rooms specially designed without protrusions and that are used solely for purposes of suicide prevention shall not be required to comply with 604.5.
2. *Alterations* to cells and rooms shall not be required to comply except to the extent determined by the Attorney General.

233.4 Medical Care Facilities. Patient bedrooms or cells required to be *accessible* by 223 shall be provided in addition to any medical isolation cells required to be *accessible* under 233.3.

233.5 Visiting Areas. Visiting areas shall comply with 233.5.

233.5.1 Cubicles and Counters. At least five percent, but not less than one, of cubicles shall comply with 902 on both the visitor and detainee sides. Where counters are provided, at least one shall comply with 904.4.2 on both the visitor and detainee or inmate sides.

EXCEPTION: This requirement shall not apply to the inmate or detainee side of cubicles or counters at non-contact visiting areas not serving *accessible* holding or housing cells or rooms.

233.5.2 Partitions. Solid partitions or security glazing that separate visitors from detainees shall comply with 904.6.

234 Accessible Residential Facilities

234.1 General. Residential *facilities* shall provide *dwelling units* in accordance with 234.

Advisory 234.1
This section outlines the requirements for residential *facilities* subject to the Americans with Disabilities Act of 1990. The *facilities* covered by this section, as well as other *facilities* not addressed or covered by these sections, may still be subject to other Federal laws such as the Fair Housing Act (42 U.S.C. 3604 et. seq.) and Section 504 of the Rehabilitation Act of 1973 (29 U.S.C. 794). For example, the Fair Housing Act requires that all residential *buildings* having four or more units, regardless of whether they are privately owned or federally assisted, include certain features of *accessible* and adaptable design according to guidelines established by the U. S. Department of Housing and Urban Development (HUD). Further information on these laws and the appropriate regulations should be consulted before proceeding with the design and construction of residential housing which may be covered by such laws.

234.1.1 Accessible Dwelling Units. In residential *facilities*, at least five percent, but not less than one unit, of the total number of *dwelling units* in a *facility* shall comply with 1101 and 1102.

EXCEPTION: Where residential *facilities* contain four or less *dwelling units*, at least five percent, but not less than one unit, of the total number of *dwelling units* in the *project* shall comply with 1101 and 1102.

234.1.2 Accessible Dwelling Units, Alterations. Where *dwelling units* are *altered* or *added*, the requirements of 234 shall apply only to the *dwelling units* being *altered* or *added* until the number of *accessible dwelling units* complies with the minimum number required for new construction.

234.1.3 Communication Features. In residential *facilities,* at least two percent, but not less than one unit, of the total number of *dwelling units* in a *facility* shall comply with 1101 and 1103.

EXCEPTION: Where residential *facilities* contain four or less *dwelling units*, at least two percent, but not less than one unit, of the total number of *dwelling units* in the *project* shall comply with 1101 and 1103.

234.1.4 Communication Features, Alterations. Where *dwelling units* are *altered* or *added*, the requirements of 234 shall apply only to the *dwelling units* being *altered* or *added* until the number of *dwelling units* with *accessible* communication features complies with the minimum number required for new construction.

234.1.5 Dispersion. *Dwelling units* required to comply with 1102 and *dwelling units* required to comply with 1103 shall be dispersed among the various types of *dwelling units* in the *facility* and shall provide choices of *dwelling units* comparable to and integrated with those available to other residents.

EXCEPTION: Single level *dwelling units* shall be permitted where *spaces* and amenities are equivalent to those provided in multi-level *dwelling units*.

TABLE OF CONTENTS

CHAPTER 1: APPLICATION AND ADMINISTRATION 3
F101 Purpose 3
F102 Provisions for Adults and Children 3
F103 Modifications and Waivers 3
F104 Conventions 4
F105 Referenced Standards 5
F106 Definitions 6

CHAPTER 2: SCOPING REQUIREMENTS 11
F201 Application 11
F202 Existing Buildings and Facilities 11
F203 General Exceptions 15
F204 Protruding Objects 16
F205 Operable Parts 16
F206 Accessible Routes 16
F207 Accessible Means of Egress 21
F208 Parking Spaces 21
F209 Passenger Loading Zones 24
F210 Stairways 24
F211 Drinking Fountains and Water Coolers 24
F212 Sinks, Kitchens, Kitchenettes, and Wet Bars 25
F213 Toilet and Bathing Facilities 25
F214 Laundry Equipment 27
F215 Emergency Alarm Systems 27
F216 Signs 28
F217 Telephones 29
F218 Transportation Facilities 31
F219 Assistive Listening Systems 31
F220 Automatic Teller Machines and Fare Machines 32
F221 Assembly Seating 32
F222 Dressing, Fitting, and Locker Rooms 33
F223 Medical Care Facility Patient or Resident Sleeping Rooms 33
F224 Transient Lodging Guest Rooms 34
F225 Self-Service Storage Facilities 37
F226 Dining Surfaces and Work Surfaces 37
F227 Sales and Service Counters 38
F228 Storage 39
F229 Depositories, Vending Machines, Change Machines, and Mail Boxes 40
F230 Windows 40
F231 Two-Way Communication Systems 40

F232 Judicial Facilities 40
F233 Detention and Correctional Facilities 41
F234 Accessible Residential Facilities 43

CHAPTER 1: APPLICATION AND ADMINISTRATION

F101 Purpose

This part provides scoping and technical requirements for accessibility to *sites*, *facilities*, *buildings*, and *elements* by individuals with disabilities. These requirements are to be applied during the design, construction, *lease* and *alteration* of *sites*, *facilities*, *buildings*, and *elements* to the extent required by regulations issued by Federal agencies under the Architectural Barriers Act of 1968.

F102 Provisions for Adults and Children

The technical requirements applicable to this part are based on adult dimensions and anthropometrics. In addition, technical requirements based on children's dimensions and anthropometrics for drinking fountains, water closets, toilet compartments, lavatories and sinks, dining surfaces and work surfaces are included.

F103 Modifications and Waivers

The Architectural Barriers Act authorizes the Administrator of the General Services Administration, the Secretary of the Department of Housing and Urban Development, the Secretary of the Department of Defense, and the United States Postal Service to modify or waive the accessibility standards for *buildings* and facilities covered by the Architectural Barriers Act on a case-by-case basis, upon application made by the head of the department, agency, or instrumentality of the United States concerned. The General Services Administration, the Department of Housing and Urban Development, the Department of Defense, and the United States Postal Service may grant a modification or waiver only upon a determination that it is clearly necessary. Section 502(b)(1) of the Rehabilitation Act of 1973 authorizes the Access Board to ensure that modifications and waivers are based on findings of fact and are not inconsistent with the Architectural Barriers Act.

Advisory F103
The provisions for modifications and waivers differ from the guidelines issued under the Americans with Disabilities Act in that "equivalent facilitation" does not apply. There is a formal procedure for Federal agencies to request a waiver or modification of applicable standards under the Architectural Barriers Act of 1968, 42 U.S.C. section 4156.

F104 Conventions

Figure F104

Convention	Description
36 / 915	dimension showing English units (in inches unless otherwise specified) above the line and SI units (in millimeters unless otherwise specified) below the line
6 / 150	dimension for small measurements
33-36 / 840-915	dimension showing a range with minimum - maximum
min	minimum
max	maximum
>	greater than
<	less than
	boundary of clear floor space or maneuvering clearance
℄	centerline
	a permitted element or its extension
	direction of travel or approach
	a wall, floor, ceiling or other element cut in section or plan
	an element in elevation or plan
	location zone of element, control or feature
italics	defined term

F104.1 Dimensions. Dimensions that are not stated as "maximum" or "minimum" are absolute.

F104.1.1 Construction and Manufacturing Tolerances. All dimensions are subject to conventional industry tolerances.

Advisory F104.1.1
Conventional industry tolerances recognized by this provision include those for field conditions and those that may be a necessary consequence of a particular manufacturing process. Recognized tolerances are not intended to apply to design work. It is good practice when specifying dimensions to avoid stating in the specification a tolerance (i.e., if this document requires "32 inches" avoid specifying "32 inches plus or minus X inches"). This could lead some to mistakenly assume that a tolerance allowed by this document can be applied in addition to the specified tolerance. This "double-dipping" or compounding of tolerances would not achieve the intended requirement. Where the requirement itself allows a range of dimensions, such as in section 604.4 where the height of water closets must be 17 inches minimum to 19 inches maximum measured to the top of the toilet seat, "17 inches minus X inches minimum to 19 inches plus X inches maximum" is how the provision for tolerance is intended to apply. As stated previously though, it is good practice to simply specify the dimensions as "17 inches to 19 inches". Information on specific tolerances may be available from industry or trade organizations, code groups and *building* officials, and published references.

F104.2 Calculation of Percentages. Where the required number of *accessible elements* or *facilities* to be provided is determined by calculations of ratios or percentages and remainders or fractions result, provide the next greater whole number of such *elements* or *facilities*. Where the determination of the required size or dimension of an *element* or *facility* involves ratios or percentages, rounding down for values less than one half shall be permitted.

F105 Referenced Standards

F105.1 General. The standards referenced in this part and listed in F105.2 shall be considered part of the requirements of this part to the prescribed extent of each such reference. References to standards within the technical and scoping requirements shall apply to the specific edition of the reference standard listed in F105.2. Where differences occur between provisions of this part and referenced standards, the provisions of this part shall apply.

Advisory F105.1
In addition to the requirements of this document, there is an obligation to meet the requirements of any referenced standards unless there is a conflict with the guidelines. It is important to use the specific edition of the referenced standards.

F105.2 Referenced Standards.

F105.2.1 Installation, Maintenance, and Use of Protective Signaling Systems. NFPA 72-1996.

F105.2.2 Power-Operated Pedestrian Doors. ANSI/BHMA A156.10-1996.

F105.2.3 Power-Assist and Low-Energy Power-Operated Doors. ANSI/BHMA A156.19-1996.

F105.2.4 Safety Code for Elevators and Escalators. ASME/ANSI A17.1-1993, (including Addenda ASME/ANSI A17.1a-1994 and ASME/ANSI A17.1b-1995).

F106 Definitions

F106.1 General. Terms defined in F106.5 shall have the specified meaning for purposes of this part, unless otherwise stated.

F106.2 Terms Defined in Referenced Standards. Terms not defined in this section, or in regulations issued by the Administrator of the General Services Administration, the Secretary of Defense, the Secretary of Housing and Urban Development, or the U.S. Postal Service to implement the Architectural Barriers Act but specifically defined in a referenced standard, shall have the specified meaning from the referenced standard, unless otherwise stated.

F106.3 Undefined Terms. The meaning of terms not specifically defined in this part, or in regulations issued by the Administrator of the General Services Administration, the Secretary of Defense, the Secretary of Housing and Urban Development, or the United States Postal Service to implement the Architectural Barriers Act or in referenced standards shall be as defined by collegiate dictionaries in the sense that the context implies.

F106.4 Interchangeability. Words, terms and phrases used in the singular include the plural and those used in the plural include the singular.

F106.5 Defined Terms.

Accessible. A *site*, *building*, *facility*, or portion thereof that complies with this part.

Accessible Means of Egress. Means of egress is a continuous and unobstructed way of exit travel from any point in a *building* or *facility* to a *public way*. An *accessible means of egress* is one that provides an *accessible route* to an *area of refuge*, a horizontal exit or a *public way*.

Accessible Route. A continuous, unobstructed path that complies with this part.

Addition. An expansion, extension, or increase in the gross floor area or height of a *building* or *facility*.

Administrative Authority. A governmental agency that adopts or enforces regulations and guidelines for the design, construction, or *alteration* of *buildings* and *facilities*.

Alteration. A change to a *building* or *facility* that affects or could affect the usability of the *building* or *facility* or part thereof. *Alterations* include, but are not limited to, remodeling, renovation, rehabilitation, reconstruction, historic restoration, resurfacing of *circulation paths* or *vehicular ways*,

changes or rearrangement of the structural parts or *elements*, and changes or rearrangement in the plan configuration of walls and full-height partitions. Normal maintenance, reroofing, painting or wallpapering, or changes to mechanical and electrical systems are not *alterations* unless they affect the usability of the *building* or *facility*.

Area of Refuge. An area where people may remain temporarily to await further instructions or assistance during emergency evacuation.

Assembly Area. A room or *space* accommodating a group of individuals for recreational, educational, political, social, civic, or amusement purposes, or for the consumption of food and drink.

Automatic Door. A door operated with power-operated mechanisms and *operable parts* that open and close the door automatically upon receipt of a momentary actuating signal (see *power-assisted door*).

Building. Any structure used or intended for supporting or sheltering any use or occupancy.

Characters. Letters, numbers, punctuation marks and typographic symbols.

Children's Use. *Spaces* and *elements* specifically designed for use primarily by people 12 years old and younger.

Circulation Path. An exterior or interior way of passage from one place to another for pedestrians, including, but not limited to, *walks*, hallways, courtyards, stairways, and stair landings.

Closed-Circuit Telephone. A telephone with a dedicated line such as a house phone, courtesy phone or phone that must be used to gain *entrance* to a *facility*.

Common Use. Interior or exterior rooms, *spaces*, or *elements* that are made available for the use of a restricted group of people such as the occupants of a homeless shelter, the occupants of an office *building*, or the guests of such occupants.

Cross Slope. The slope that is perpendicular to the direction of travel (see *running slope*).

Curb Ramp. A short *ramp* cutting through a curb or built up to it.

Destination-Oriented Elevator. An elevator system that provides lobby controls to select floor stops, lobby indicators designating which elevator to use and a car indicator designating the floors at which the car will stop.

Detectable Warning. A standardized surface feature built in or applied to walking surfaces or other *elements* to warn visually impaired people of hazards on a *circulation path*.

Dwelling Unit. A single unit containing rooms and *spaces* for living, bathing, and sleeping, and which may provide a kitchen or food preparation area.

Element. An architectural or mechanical component of a *building*, *facility*, *space*, or *site*.

Entrance. Any access point to a *building* or portion of a *building* or *facility* used for the purpose of entering. An *entrance* includes the approach *walk*, the vertical access leading to the *entrance* platform, the *entrance* platform itself, vestibule if provided, the entry door or gate, and the hardware of the entry door or gate.

Facility. All or any portion of *buildings*, structures, *site* improvements, *elements*, and pedestrian or vehicular routes located on a *site*.

Ground Floor. Any *occupiable* floor not more than one *story* above or below grade with direct access to grade.

Joint Use. Interior or exterior rooms, *spaces*, or elements that are common *space* available for use by all occupants of the *building*. *Joint use* does not include mechanical or custodial rooms, or areas occupied by other tenants.

Lease. Any agreement which establishes the relationship of landlord and tenant.

Mail Boxes. Receptacles for the receipt of documents, packages, or other deliverable matter. *Mail boxes* include, but are not limited to, post office boxes and receptacles provided by commercial mail-receiving agencies, apartment houses, and schools.

Marked Crossing. A crosswalk or other identified path intended for pedestrian use in crossing a *vehicular way*.

Mezzanine. That portion of a *story* which is an intermediate floor level placed within the *story* and having *occupiable space* above and below its floor.

Occupiable. A room or enclosed *space* designed for human occupancy.

Operable Part. A component of an *element* used to insert or withdraw objects, or to activate, deactivate, or to adjust the *element*.

Pictogram. A pictorial symbol which represents activities, facilities, or concepts.

Power-Assisted Door. A door used for human passage with a mechanism that helps to open the door, or relieves the opening resistance of a door, upon the activation of a switch or a continued force applied to the door itself (see *automatic door*).

Project. The whole of one or more residential structures and appurtenant structures, equipment, roads, *walks*, and parking lots which are covered by a single contract for Federal assistance, or are developed as a whole for processing purposes, whether or not located on a common *site*.

Public Entrance. An *entrance* that is not a *service entrance* or a *restricted entrance*.

Public Use. Interior or exterior rooms, *spaces*, or *elements* that are made available to the public. *Public use* may be provided at a *building* or *facility* that is privately or publicly owned.

Public Way. Any street, alley or other parcel of land open to the outside air leading to a public street, which has been deeded, dedicated or otherwise permanently appropriated to the public for *public use* and which has a clear width and height of not less than 10 feet (3,050 mm).

Qualified Historic Building or Facility. A *building* or *facility* that is listed in or eligible for listing in the National Register of Historic Places; or designated as historic under an appropriate State or local law.

Ramp. A walking surface which has a *running slope* steeper than 1:20.

Restricted Entrance. An *entrance* that is made available for *common use* on a controlled basis but not *public use* and that is not a *service entrance*.

Running Slope. The slope that is parallel to the direction of travel (see *cross slope*).

Self-Service Storage Facility. Real property designed and used for the purpose of renting or leasing individual storage *spaces* to customers for the purpose of storing and removing personal property on a self-service basis.

Service Entrance. An *entrance* intended primarily for delivery of goods or services (see *entrance, public entrance,* and *restricted entrance*).

Sign. An architectural *element* composed of displayed text, numbers, symbolic, *tactile* or pictorial information.

Site. A parcel of land bounded by a property line or a designated portion of a public right-of- way.

Space. A definable area, such as a room, toilet room, hall, *assembly area*, *entrance*, storage room, alcove, courtyard, or lobby.

Story. That portion of a *building* or *facility* included between the upper surface of a floor and upper surface of the floor or roof next above. A *story* containing one or more *mezzanines* has more than one floor level.

Structural Frame. The columns and the girders, beams, and trusses having direct connections to the columns and all other members which are essential to the stability of the *building* or *facility* as a whole.

Tactile. An object that can be perceived using the sense of touch.

Technically Infeasible. With respect to an *alteration* of a *building* or a *facility*, something that has little likelihood of being accomplished because existing structural conditions would require removing or altering a load-bearing member which is an essential part of the *structural frame*; or because other existing physical or *site* constraints prohibit modification or *addition* of *elements*, *spaces*, or features

which are in full and strict compliance with the minimum requirements for *alterations* and which are necessary to provide accessibility.

Transient Lodging. A *building* or *facility* excluding inpatient medical care *facilities*, long-term care *facilities*, or detention or correctional *facilities* that contains one or more guest rooms for sleeping. Guest rooms may include a kitchen or food preparation area. *Transient lodging* may include, but is not limited to, resorts, group homes, hotels, motels, and dormitories, homeless shelters, halfway houses and social service lodging.

TTY. Machinery or equipment that employs interactive text based communications through the transmission of coded signals across the standard telephone network. The term *TTY* can include, for example, devices known as TDDs (telecommunication display devices or telecommunication devices for deaf persons) or computers with special modems. TTYs are also called text telephones.

Vehicular Way. A route intended for vehicular traffic, such as a street, driveway, or parking lot.

Walk. An exterior pathway with a prepared surface intended for pedestrian use, including general pedestrian areas such as plazas and courts.

Wheelchair. A mobility aid belonging to any class of three- or four-wheeled devices, usable indoors, designed for and used by individuals with mobility impairments, whether operated manually or powered.

Wheelchair Space. *Space* for a single *wheelchair* and its occupant.

CHAPTER 2: SCOPING REQUIREMENTS

F201 Application

F201.1 Scope. All areas of newly designed or newly constructed *buildings* and *facilities* and *altered,* or leased portions of existing *buildings* and *facilities* shall comply with this part.

F201.2 Application Based on Building or Facility Use. Where a *site*, *building*, or *facility* contains more than one use, each portion shall comply with the applicable requirements for that use.

F201.3 Temporary and Permanent Structures. This part shall apply to temporary and permanent *buildings* and *facilities.*

Advisory F201.3
Temporary *buildings* or *facilities* covered by these guidelines include, but are not limited to, reviewing stands, temporary classrooms, bleacher areas, fixed furniture systems, wall systems, and exhibit areas, temporary banking *facilities*, temporary health screening *facilities*, and temporary pedestrian passageways around a construction site. Structures and equipment directly associated with the actual processes of construction are not required to be *accessible* as permitted in F203.2.

F202 Existing Buildings and Facilities

F202.1 General. Existing *buildings* or *facilities,* including leased *buildings* or *facilities,* shall comply with F202.

F202.2 Additions. Each *addition* to an existing *building* or *facility* shall comply with the requirements for new construction.

F202.2.1 Accessible Route. At least one *accessible route* shall be provided within the boundary of the *site* from public transportation stops, *accessible* parking *spaces*, passenger loading zones if provided, and public streets or sidewalks, to an *accessible entrance* serving the *addition.* If the only *accessible entrances* serving the *addition* are provided in the existing *building* or *facility*, the *accessible route* shall connect at least one *existing entrance* to all *accessible spaces* and *elements* within the *addition*. In addition, *elements* and *spaces* specified in F202.2.2 through F202.2.5 shall be on, or connect to, the *accessible route*.

F202.2.2 Entrance. Where an *entrance* is not provided in an *addition*, at least one *entrance* in the existing *building* or *facility* shall be *accessible* and shall serve the *addition*.

F202.2.3 Toilet and Bathing Facilities. Where toilet *facilities* and bathing *facilities* are not provided in an *addition* but are provided in the existing *building* or *facility* to serve the *addition*, toilet *facilities* and bathing *facilities* shall be made *accessible* and shall comply with F202.2.3.

EXCEPTION: In *alterations* to areas serving *additions* where it is *technically infeasible* to comply with 603, altering existing toilet or bathing rooms is not required where a single unisex toilet room or bathing room complying with F213.2.1 is provided to serve the *addition*.

F202.2.3.1 Existing Toilet Facility. Where existing toilet *facilities* are provided in the existing *building* or *facility*, at least one toilet *facility* for men and at least one toilet *facility* for women shall be *accessible* and shall serve the *addition*.

EXCEPTION: Where only one toilet *facility* is provided in the existing *building* or *facility*, one toilet *facility* shall be *accessible* and shall serve the *addition*.

F202.2.3.2 Existing Bathing Facility. Where existing bathing *facilities* are provided in the existing *building* or *facility*, at least one bathing *facility* for men and at least one bathing *facility* for women shall be *accessible* and shall serve the *addition*.

EXCEPTION: Where only one bathing *facility* is provided in the existing *building* or *facility*, one bathing *facility* shall be *accessible* and shall serve the *addition*.

F202.2.4 Public Telephone. Where a public telephone is not provided in an *addition* but is provided in the existing *building* or *facility* to serve the *addition*, at least one public telephone in the existing *building* or *facility* shall comply with F217.

F202.2.5 Drinking Fountain. Where a drinking fountain is not provided in an *addition* but is provided in the existing *building* or *facility* to serve the *addition*, at least one drinking fountain in the existing *building* or *facility* shall comply with F211.1.

F202.3 Alterations. Where existing *elements* or *spaces* are *altered*, each *altered element* or *space* shall comply with the applicable provisions of this chapter.

Advisory F202.3
Although covered entities are permitted to limit the scope of an *alteration* to individual *elements*, designers should note that the *alteration* of multiple *elements* within a room or *space* may provide a cost-effective opportunity to make the entire room or *space accessible*.

EXCEPTIONS: 1. *Altered elements* or *spaces* are not required to be located on an *accessible route*, unless required by F202.4.
2. In *alterations*, where compliance with applicable provisions is *technically infeasible*, the *alteration* shall provide accessibility to the maximum extent feasible. Any *elements* or *spaces* of the *building* or *facility* that are being *altered* and can be made *accessible* shall be made *accessible* within the scope of the *alteration*.

F202.3.1 Prohibited Reduction in Access. An *alteration* that decreases or has the effect of decreasing the accessibility of a *building* or *facility* below the requirements for new construction at the time of *alteration* is prohibited.

F202.3.2 Extent of Application.

F202.3.2.1 Altered Elements and Spaces. An *alteration* of an existing *element*, *space*, or area of a *building* or *facility* shall not impose a requirement for accessibility greater than required for new construction.

F202.4 Alterations Affecting Primary Function Areas. In addition to the requirements of F202.3, an *alteration* that affects or could affect the usability of or access to an area containing a primary function shall be made so as to ensure that, to the maximum extent feasible, the path of travel to the *altered* area and the rest rooms, telephones, and drinking fountains serving the *altered* area, are readily *accessible* to and usable by individuals with disabilities, unless such *alterations* are disproportionate to the overall *alterations* in terms of cost and scope as determined under criteria established by the Administrator of the General Services Administration, the Secretary of Defense, the Secretary of Housing and Urban Development, and the United States Postal Service.

Advisory F202.4
The area of a *building* or *facility* containing the major activity for which the *building* or *facility* is intended is the primary function area.

F202.5 Alterations to Qualified Historic Buildings and Facilities. *Alterations* to a *qualified historic building or facility* shall comply with F202.3 and F202.4.

EXCEPTION: Where the State Historic Preservation Officer or Advisory Council on Historic Preservation determines that compliance with the requirements for *accessible routes*, *ramps*, *entrances*, or toilet *facilities* would threaten or destroy the historic significance of the *building* or *facility*, the exceptions for *alterations* to *qualified historic buildings* or *facilities* for that *element* shall be permitted to apply.

F202.6 Leases. *Buildings* or *facilities* for which new *leases* are negotiated by the Federal government after the effective date of the revised Uniform Federal Accessibility Standards (UFAS), including new *leases* for *buildings* or *facilities* previously occupied by the Federal government, shall comply with F202.6.

EXCEPTIONS: 1. *Buildings* or *facilities* leased for use by officials servicing disasters on a temporary, emergency basis shall not be required to comply with F202.
2. *Buildings* or *facilities* leased for 12 months or less shall not be required to comply with F202, provided that the *lease* may not be extended or renewed.

F202.6.1 Joint Use Areas. *Joint use* areas serving the leased *space* shall comply with F202.6.

Advisory F202.6.1
When negotiating a *lease*, there is a need to ensure that joint-use areas are *accessible*. Inaccessible joint-use areas may prevent access to and from leased *space*.

EXCEPTION: *Alterations* and *additions* to *joint use* areas serving the leased *space* shall not be required to comply with F202.2, F202.3, and F202.5 provided that such *alterations* are not undertaken by or on behalf of the Federal government.

F202.6.2 Accessible Route. Primary function areas, as defined by Administrator of the General Services Administration, the Secretary of Defense, the Secretary of Housing and Urban Development, and the United States Postal Service, shall be served by at least one *accessible route* complying with F206. *Elements* and *spaces* required to be *accessible* by F202.6 shall be on an *accessible route* complying with F206.

EXCEPTION: Fire Alarms required by F202.6.5.2 and assistive listening systems required by F202.6.5.5 shall not be required to be on an *accessible route*.

F202.6.3 Toilet and Bathing Facilities. Where provided, toilet *facilities* and bathing *facilities* shall comply with F202.6.3.

F202.6.3.1 Multiple Facilities. At least one toilet *facility* or bathing *facility* for each sex on each floor that has toilet *facilities* or bathing *facilities* shall comply with F213.2 and F213.3.

F202.6.3.2 Single Facilities. Where only one toilet or bathing *facility* is provided in a *building* or *facility* for each sex, either one unisex toilet or bathing *facility,* or one toilet or bathing *facility* for each sex, shall comply with F213.2 and F213.3.

F202.6.4 Parking. Parking shall comply with F208.

F202.6.5 Other Elements and Spaces. Where provided, other *elements* and *spaces* shall comply with F202.6.5.

F202.6.5.1 Drinking Fountains and Water Coolers. Drinking fountains and water coolers shall comply with F211.

F202.6.5.2 Fire Alarms. Fire alarms shall comply with F215.1.

EXCEPTION: Fire alarms shall not be required to comply with 702 where existing power sources must be upgraded to meet the requirement.

F202.6.5.3 Public Telephones. Public telephones shall comply with F217.

F202.6.5.4 Dining Surfaces and Work Surfaces. Dining surfaces and work surfaces shall comply with F226.

F202.6.5.5 Assembly Areas. Assistive listening systems shall comply with F219 and assembly seating shall comply with F221.

F202.6.5.6 Sales and Service Counters. Sales or service counters shall comply with F227.

F202.6.5.7 Depositories, Vending Machines, Change Machines, and Mail Boxes. Depositories, vending machines, change machines, and *mail boxes* shall comply with F229.

F202.6.5.8 Leased Residential Facilities. *Dwelling units* shall comply with F234.

F203 General Exceptions

F203.1 General. *Sites*, *buildings*, *facilities*, and *elements* shall be exempt from this part to the extent specified by F203.

F203.2 Construction Sites. Structures, *sites,* and equipment directly associated with the actual processes of construction, including, but not limited to scaffolding, bridging, materials hoists, materials storage, or construction trailers are not required to be *accessible*. Portable toilet units provided for use exclusively by construction personnel on a construction *site* are not required to be *accessible*.

F203.3 Raised Areas. Areas raised primarily for purposes of security, life safety, or fire safety, including but not limited to observation or lookout galleries, prison guard towers, fire towers, or life guard stands are not required to be *accessible* or to be served by an *accessible route*.

F203.4 Limited Access Spaces. *Spaces* accessed only by ladders, catwalks, crawl *spaces*, very narrow passageways, or tunnels are not required to be *accessible*.

F203.5 Equipment Spaces. *Spaces* frequented only by service personnel for maintenance, repair, or occasional monitoring of equipment are not required to be *accessible*. Such *spaces* include but are not limited to elevator pits, elevator penthouses, mechanical, electrical, or communications equipment rooms, piping or equipment catwalks, water or sewage treatment pump rooms and stations, electric substations and transformer vaults, and highway and tunnel utility *facilities*.

F203.6 Single Occupant Structures. Single occupant structures accessed only by passageways below grade or elevated above standard curb height, including but not limited to toll booths that are accessed only by underground tunnels, are not required to be *accessible*.

F203.7 Detention and Correctional Facilities. In detention and correctional *facilities*, access is not required to *common use* areas that are used only by inmates or detainees and security personnel and that do not serve holding cells or housing cells or rooms required to be *accessible* in accordance with F233.

F203.8 Residential Facilities. In residential *facilities*, access is not required in *common use* areas that do not serve *dwelling units* required to be *accessible* by F234.

F204 Protruding Objects

F204.1 General. Protruding objects on *circulation paths* shall comply with 307.

F205 Operable Parts

F205.1 General. *Operable parts* on *accessible routes* and in *accessible* rooms and *spaces* shall comply with 309.

F206 Accessible Routes

F206.1 General. *Accessible routes* shall be provided in accordance with F206.

F206.2 Where Required. *Accessible routes* shall be provided where required by F206.2 and shall comply with Chapter 4.

F206.2.1 Site Arrival Points. *Accessible routes* shall be provided within the boundary of the *site* from public transportation stops, *accessible* parking *spaces*, passenger loading zones, and public streets or sidewalks, to the *accessible building* or *facility entrance* they serve.

EXCEPTIONS: 1. In *alterations* to *qualified historic buildings or facilities* permitted by F202.5 to use the exceptions for *alterations* to *qualified historic buildings* or *facilities*, at least one *accessible route* from a *site* arrival point to an *accessible entrance* shall be provided.
2. An *accessible route* shall not be required between site arrival points and the *building* or *facility entrance* if the only means of access between them is a *vehicular way* not provided for pedestrian access.

Advisory F206.2.1 Exception 2
Access from site arrival points may include *vehicular ways*. Where a *vehicular way*, or a portion of a *vehicular way*, is used for pedestrian travel, this exception does not apply.

F206.2.2 Within a Site. *Accessible routes* shall connect *accessible buildings*, *accessible facilities*, *accessible elements*, and *accessible spaces* that are on the same *site*.

EXCEPTION: An *accessible route* is not required between *accessible buildings*, *accessible facilities, accessible elements and accessible spaces* that have as the only means of access between them, a *vehicular way* not provided for pedestrian access.

F206.2.3 Multi-Level Buildings and Facilities. *Accessible routes* shall connect each level, including *mezzanines*, in multi-level *buildings* and *facilities*.

Advisory F206.2.3
While a *mezzanine* may be a change in level, it is not a *story* for purposes of determining whether a *building* or *facility* is required to have an elevator. If an elevator is required, it must serve *mezzanines*. Levels in *buildings* and *facilities* without elevators must still fully comply with this document.

EXCEPTIONS: 1. An *accessible route* is not required to levels located above or below the *accessible* level in *buildings* or *facilities* that are less than three *stories* and that are not open to the public if the level above or below the *accessible* level houses no more than five persons and is less than 500 square feet.
2. An *accessible route* is not required to levels located above or below the *accessible* level in detention and correctional *facilities* where *accessible* cells or rooms provided in accordance with F233, all *common use* areas serving such cells or rooms, and all *public use* areas are on an *accessible* route.
3. An *accessible route* is not required to levels located above or below the *accessible* level in residential *facilities* where *accessible dwelling units* complying with F234, all *common use* areas serving such *dwelling units*, and all *public use* areas are on an *accessible route*.

Advisory F206.2.3 Exception 3
Where *common use* areas are provided for the use of residents, it is presumed that all such *common use* areas "serve" *accessible dwelling units* unless use is restricted to residents occupying other *dwelling units*. For example, if all residents are permitted to use all laundry rooms, then all laundry rooms "serve" *accessible dwelling units*. However, if the laundry room on the first floor is restricted to use by residents on the first floor, and the second floor laundry room is for use by occupants of the second floor, then first floor *accessible* units are "served" only by laundry rooms on the first floor. In this example, an *accessible route* is not required to the second floor provided that all *accessible* units and all *common use* use areas serving them are on the first floor.

4. An *accessible route* is not required to levels located above or below the *accessible* level in multi-story *transient lodging* guest rooms provided that *spaces* complying with 806.2 are on an *accessible route* and are suitable for dual occupancy.
5. In *assembly areas* required to comply with F221, an *accessible route* is not required to serve seating where *wheelchair spaces* or designated aisle seats required to be on an *accessible route* are not provided.
6. In air traffic control towers, an *accessible route* is not required to serve the cab and the floor immediately below the cab.
7. In *alterations* to *qualified historic buildings or facilities* where an exception is permitted by F202.5, an *accessible route* from an *accessible entrance* to all publicly used *spaces* on at least the level of the *accessible entrance* shall be provided.

F206.2.3.1 Stairs and Escalators in Existing Buildings. In *alterations* and *additions*, where an escalator or stair is provided where none existed previously and major structural modifications are necessary for such installation, an *accessible route* shall be provided between the levels served by the escalator or stair, unless exempted by F206.2.3.

F206.2.4 Accessible Spaces and Elements. *Accessible routes* shall connect *accessible building* or *facility entrances* with all *accessible spaces* and *elements* within the *building* or *facility* which are otherwise connected by a *circulation path*.

Advisory F206.2.4
*Accessible route*s must connect all *spaces* and *elements* required to be *accessible* including, but not limited to, raised areas and speaker platforms.

EXCEPTIONS: 1. An *accessible route* is not required between levels where exempted by F206.2.3.
2. Vertical access to raised judges' benches or courtroom stations need not be installed provided that the required clear floor *space*, maneuvering *space*, and, if appropriate, electrical service are installed at the time of initial construction to allow future installation of a means of vertical access complying with F206.6, F206.7, or 303.4 without requiring substantial reconstruction of the *space*.

F206.2.5 Restaurants and Cafeterias. In restaurants and cafeterias, an *accessible route* shall be provided to all dining areas, including raised or sunken dining areas, and outdoor seating areas.

EXCEPTIONS: 1. In *buildings or facilities* not required to provide an *accessible route* between *stories*, an *accessible route* to a *mezzanine* dining area is not required, provided that the *mezzanine* contains less than 25 percent of the total area for seating and dining and the same services are provided in the *accessible* area.
2. In *alterations*, accessibility to existing raised or sunken dining areas, or to all parts of existing outdoor seating areas is not required provided that the same services and decor are provided in an *accessible space* usable by the public and not restricted to use by people with disabilities.

F206.2.6 Performance Areas. An *accessible route* shall be provided where a *circulation path* directly connects a performance area to an assembly seating area. An *accessible route* shall be provided from performance areas to ancillary areas or *facilities* used by performers. In *alterations*, where it is *technically infeasible* to alter all performance areas to be on an *accessible route*, at least one of each type of performance area shall be made *accessible*.

F206.3 Location. *Accessible routes* shall coincide with or be located in the same area as a general *circulation path*. Where the *circulation path* is interior, the *accessible route* shall also be interior.

Advisory F206.3
The *accessible route* must be in the same area as the general *circulation path*. This means that *circulation paths*, such as *vehicular ways* designed for pedestrian traffic, *walks*, and unpaved paths that are designed to be routinely used by pedestrians must be *accessible* or have an *accessible route* nearby.

F206.4 Entrances. *Accessible entrances* shall be provided in accordance with F206.4.

EXCEPTIONS: 1. Where an *alteration* includes *alterations* to an *entrance*, and the *building* or *facility* has an *accessible entrance*, the *altered entrance* is not required to be *accessible*, unless required by F202.4. *Signs* complying with F206.4.8 shall be provided.
2. In *alterations* to *qualified historic buildings or facilities* permitted by F202.5 to use exceptions for *alterations* to *qualified historic buildings* or *facilities,* at least one *accessible* public *entrance* shall be provided. Where no public *entrance* can be made *accessible*, then either an unlocked *entrance* not used by the public shall be made *accessible*; or a locked *accessible entrance* with a notification system or remote monitoring shall be provided. *Signs* complying with F206.4.8 shall be provided at the primary *entrance* and at the *accessible entrance*.

F206.4.1 Parking Garage Entrances. Where direct access to a *building* or *facility* is provided for pedestrians from an enclosed parking garage, at least one direct *entrance* from the garage to the *building* shall be *accessible*.

F206.4.2 Entrances from Tunnels or Elevated Walkways. Where direct access is provided for pedestrians from a pedestrian tunnel or elevated walkway to a *building* or *facility*, at least one direct *entrance* to the *building* or *facility* from each tunnel or walkway shall be *accessible*.

F206.4.3 Public Entrances. In addition to *accessible entrances* required by F206.4.1 and F206.4.2, at least 50 percent of all public *entrances* shall be *accessible*. At least one *accessible entrance* shall be a *ground floor entrance*.

F206.4.4 Tenant Spaces. At least one *accessible entrance* shall be provided to each tenancy in a *facility*, except as specified in F225 or F234.

F206.4.5 Restricted Entrances. Where *restricted entrances* are provided to a *building* or *facility*, at least one *restricted entrance* to the *building* or *facility* shall be *accessible*.

F206.4.6 Service Entrances. If a *service entrance* is the only *entrance* to a *building* or to a tenancy in a *facility*, that *entrance* shall be *accessible*.

F206.4.7 Entrances for Inmates or Detainees. Where *entrances* used only by inmates or detainees and security personnel are provided at judicial *facilities,* detention *facilities,* or correctional *facilities*, at least one such *entrance* shall be *accessible*.

F206.4.8 Signs. Where not all *entrances* are *accessible*, *accessible entrances* shall be identified by the International Symbol of Accessibility complying with 703.7 and directional *signs* indicating the location of the nearest *accessible entrance* shall be provided at inaccessible *entrances*. Directional *signs* shall comply with 703.4. No *signs* are required where all *entrances* are *accessible*.

Advisory F206.4.8
Where a directional *sign* is required, it should be located to minimize backtracking. In some cases, this could mean locating a *sign* at the beginning of a route, not just at the in*accessible* entrances to a *building*.

F206.5 Doors and Doorways. *Accessible* doors and doorways shall be provided in accordance with F206.5 and shall comply with 404.

F206.5.1 Accessible Entrances. Each *accessible entrance* to a *building* or *facility* shall have at least one *accessible* door or doorway.

F206.5.2 Accessible Rooms and Spaces. Within a *building* or *facility*, at least one door or doorway serving each *accessible* room or *space* shall be *accessible*.

F206.6 Elevators. New passenger elevators shall comply with 407.2 or 407.3. Where multiple elevators are provided, each passenger elevator shall comply with 407.2 or 407.3.

EXCEPTION: Where an elevator is provided in a *building* or *facility* eligible for the exceptions to F206.2.3, the elevator shall comply with 407.2, 407.3 or 407.4.

F206.6.1 Existing Elevators. *Altered elements* of existing elevators shall comply with 407.5. Such *elements* shall also be *altered* in all elevators that are programmed to respond to the same hall call control as the *altered* elevator and shall comply with the requirements of 407.5.

F206.7 Wheelchair (Platform) Lifts. *Wheelchair* (platform) lifts shall be permitted as a component of an *accessible route* in new construction as permitted by F206.7 and shall comply with 408. *Wheelchair* (platform) lifts provided as a component of an *accessible route* in an existing *building* or *facility* shall comply with 408.

F206.7.1 Performance Areas and Speakers' Platforms. *Wheelchair* (platform) lifts shall be permitted to provide an *accessible route* to a performance area or a speakers' platform in an assembly occupancy.

F206.7.2 Wheelchair Spaces. *Wheelchair* (platform) lifts shall be permitted to comply with the *wheelchair space* dispersion and line-of-sight requirements of F221 and 802.

F206.7.3 Incidental Spaces. *Wheelchair* (platform) lifts shall be permitted to provide an *accessible route* to incidental *occupiable spaces* and rooms which are not open to the public and which are occupied by five persons maximum.

F206.7.4 Judicial Spaces. *Wheelchair* (platform) lifts shall be permitted to provide an *accessible route* to raised judges' benches, clerks' stations, jury boxes and witness stands or to depressed areas such as the well of a court.

F206.8 Security Barriers. Security barriers including, but not limited to, security bollards and security check points shall not obstruct a required *accessible route* or *accessible means of egress.*

EXCEPTION: Where security barriers incorporate equipment such as metal detectors, fluoroscopes, or other similar devices which cannot be made *accessible*, an *accessible route* shall be provided adjacent to such security screening devices to facilitate an equivalent *circulation path.* The *circulation path* shall permit persons with disabilities passing through security barriers to maintain visual contact with their personal items to the same extent provided others traversing the barrier.

F207 Accessible Means of Egress

F207.1 General. All *accessible spaces* shall be provided with not less than one *accessible means of egress.* Where more than one means of egress is required from any *accessible space*, each *accessible* portion of the *space* shall be served by not less than two *accessible means of egress. Accessible means of egress* shall comply with 409.

EXCEPTION: *Accessible means of egress* are not required in *alterations* to existing *buildings* or *facilities.*

F207.2 Elevators. In *buildings* or *facilities* where a required *accessible* floor is four or more *stories* above or below a level of exit discharge, at least one required *accessible means of egress* shall be an elevator complying with 409.3.

F207.3 Signs. At exit stairways and elevators serving a required *accessible space*, but not serving as an *accessible means of egress*, directional *signs* indicating the location of *accessible means of egress* shall be provided. Such *signs* shall comply with 703.4.

F208 Parking Spaces

F208.1 General. Where parking *spaces* are provided, *accessible* parking *spaces* shall be provided in accordance with F208.

EXCEPTION: This section does not apply to parking *spaces* used exclusively for buses, trucks, other delivery vehicles, law enforcement vehicles, or vehicular impound and motor pools where lots accessed by the public are provided with a passenger loading zone complying with 503.

F208.2 Number Required. *Accessible* parking *spaces* shall be provided in accordance with Table F208.2, except as required by F208.2.1, F208.2.2, and F208.2.3, and shall comply with 502.

Table F208.2 Accessible Parking Spaces

Total Number of Parking Spaces Provided in Lot	Minimum Required Number of Accessible Parking Spaces
1 to 25	1
26 to 50	2
51 to 75	3
76 to 100	4
101 to 150	5
151 to 200	6
201 to 300	7
301 to 400	8
401 to 500	9
501 to 1000	2 percent of total
1001 and over	20, plus 1 for each 100, or fraction thereof, over 1000

F208.2.1 Hospital Outpatient Facilities. Ten percent of patient and visitor parking *spaces* provided to serve hospital outpatient *facilities* shall be *accessible*.

Advisory F208.2.1
The term "outpatient facility" is not defined in this document but is intended to cover *facilities* or units that provide regular and continuing medical treatment without an overnight stay, and that are located in hospitals. Doctors' offices, independent clinics, or other *facilities* not located in hospitals are not considered hospital outpatient *facilities* for purposes of this document.

F208.2.2 Rehabilitation Facilities and Outpatient Physical Therapy Facilities. Twenty percent of patient and visitor parking *spaces* provided to serve rehabilitation *facilities* and outpatient physical therapy *facilities* shall be *accessible*.

F208.2.3 Residential Facilities. Parking *spaces* provided to serve residential *facilities* shall comply with F208.2.3.

F208.2.3.1 Parking for Residents. Where parking serves *dwelling units*, one *accessible* parking *space* minimum shall be provided for each *dwelling unit* required to be *accessible* by F234.

F208.2.3.2 Additional Spaces for Residents. Where the total parking serving *dwelling units* exceeds one parking *space* per *dwelling unit*, two percent, but not fewer than one *space*, of all the additional parking *spaces* shall be *accessible*.

F208.2.3.3 Guest Parking. Where parking is provided for other than residents it shall comply with Table F208.2.

F208.2.4 Van Parking Spaces. For every eight or fraction of eight *accessible* parking *spaces* required by F208.2, F208.2.1, and F208.2.3, at least one shall be a van parking *space* complying with 502.

F208.3 Identification. *Accessible* parking spaces shall be identified by *signs* complying with 502.6.

EXCEPTIONS: 1. Where a total of five or fewer parking *spaces* are provided, identification complying with 502.6 shall not be required.
2. In residential *facilities*, where parking *spaces* are assigned to specific *dwelling units*, identification complying with 502.6 shall not be required.

F208.4 Location. Parking *facilities* shall comply with F208.4.

Advisory F208.4
On any site with multiple lots, the number of *accessible* parking *spaces* is calculated lot-by-lot.

F208.4.1 General. *Accessible* parking *spaces* serving a particular *building* or *facility* shall be located on the shortest *accessible route* from adjacent parking to an *accessible entrance*. In *buildings* or *facilities* with multiple *accessible entrances* with adjacent parking, *accessible* parking *spaces* shall be dispersed and located on the shortest *accessible route* to the *accessible entrances*. In parking *facilities* that do not serve a particular *building or facility*, *accessible* parking *spaces* shall be located on the shortest *accessible route* to an *accessible* pedestrian *entrance* of the parking *facility*.

EXCEPTIONS: 1. All van parking *spaces* shall be permitted to be grouped on one level of a parking structure.
2. *Accessible* parking *spaces* shall be permitted to be located in different lots if equivalent or greater accessibility is provided in terms of distance from an *accessible entrance*, user cost, and user convenience.

F208.4.2 Residential Facilities. In residential *facilities*, required *accessible spaces* shall be dispersed throughout all types of parking provided for the *dwelling units* required to be *accessible* by F234.

Advisory F208.4.2
In residential *facilities*, certain *accessible* parking *spaces* may not serve particular *accessible dwelling units*. These *spaces* also should be dispersed.

EXCEPTION: Parking *spaces* for *dwelling units* required to be *accessible* shall not be required to be dispersed throughout all types of parking if equivalent or greater accessibility, in terms of distance from an *accessible entrance*, user cost and user convenience is provided.

F209 Passenger Loading Zones

F209.1 General. Where passenger loading zones are provided, one passenger loading zone in every continuous 100 linear feet (30 m) maximum of loading zone *space* shall comply with 503.

F209.2 Medical Facilities. A passenger loading zone shall be provided at an *accessible entrance* to licensed medical and long-term care *facilities*.

F209.3 Valet Parking. Valet parking services shall provide a passenger loading zone.

F210 Stairways

F210.1 General. Interior and exterior stairs that are part of a means of egress shall comply with 504.

EXCEPTIONS: 1. In detention and correctional *facilities*, stairs not located in *public use* areas shall not be required to comply with the requirements of this section.
2. In *alterations*, stairs between levels that are connected by an *accessible route* are not required to comply with 504 except that handrails complying with 505 shall be provided.

F211 Drinking Fountains and Water Coolers

F211.1 General. Where drinking fountains or water coolers are provided, they shall be provided in accordance with F211.

F211.1.1 Single Installation. Only one drinking fountain or water cooler shall not be permitted on a *site*, on a floor, or within a secured area.

EXCEPTION: Hi-lo drinking fountains or water coolers complying with 602 shall be permitted.

F211.1.2 Multiple Installations. Where more than one drinking fountain or water cooler is provided on a *site*, on a floor, or within a secured area, fifty percent shall comply with 602.1 through 602.6.

The remainder of the drinking fountains or water coolers on a site, on a floor, or within a secured area shall comply with 602.7.

EXCEPTION: Where three or more drinking fountains or water coolers are provided fifty percent shall be permitted to be calculated to be fifty percent plus or minus one.

F212 Sinks, Kitchens, Kitchenettes, and Wet Bars

F212.1 General. Sinks, Kitchens, kitchenettes, and wet bars shall comply with F212.1.

F212.1.1 Kitchens, Kitchenettes and Wet Bars. Where kitchens, kitchenettes, or wet bars are provided, they shall comply with 804.

EXCEPTIONS: 1. In medical care *facilities*, this section does not apply to patient or resident sleeping rooms that are not required to be *accessible* in accordance with F223.2, F223.3, or F223.4.
2. In *transient lodging facilities*, this section does not apply to guest rooms that are not required to be *accessible* in accordance with F224.2.
3. In detention and correctional *facilities* this section does not apply to housing cells not required to be *accessible* in accordance with F233.2.
4. In residential *facilities*, this section does not apply to *dwelling units* that are not required to be *accessible*.

F212.1.2 Sinks. Where sinks are provided, at least 5 percent, but not less than one of each type, provided in each *accessible* room or *space* shall comply with 606.

EXCEPTION: Mop or service sinks are not required to be *accessible*.

F213 Toilet and Bathing Facilities

F213.1 General. Where toilet *facilities* and bathing *facilities* are provided, they shall comply with F213. Where toilet *facilities* and bathing *facilities* are provided on an inaccessible level, toilet *facilities* and bathing *facilities* shall also be provided on an *accessible* level.

F213.2 Toilet and Bathing Rooms. Where toilet rooms are provided, each toilet room shall comply with 603. Where bathing rooms are provided, each bathing room shall comply with 603.

Advisory F213.2
The guidelines allow the use of unisex (or single-user) toilet rooms in *alterations* when technical infeasibility can be demonstrated. Unisex toilet rooms offer benefits to people who use personal care assistants. For this reason, it is advantageous to install unisex toilet rooms in addition to *accessible* single-sex toilet rooms in new *facilities*.

EXCEPTIONS: 1. In *alterations* where it is *technically infeasible* to comply with 603, altering existing toilet or bathing rooms is not required where a single unisex toilet room or bathing room complying with F213.2.1 is provided and located in the same area and on the same floor as existing inaccessible toilet or bathing rooms.
2. Where exceptions for *alterations* to *qualified historic buildings* or *facilities* are permitted by F202.5, and toilet rooms are provided, not less than one toilet room complying with 603 or a unisex room complying with F213.2.1 shall be provided.
3. Where multiple single user portable toilet or bathing units are clustered at a single location, at least 5 percent, but not less than one toilet unit or bathing unit at each cluster shall comply with 603. *Accessible* units shall be identified by the International Symbol of Accessibility complying with 703.7.
4. Where multiple single user toilet rooms are clustered at a single location and contain fixtures in excess of the minimum required number of plumbing fixtures for the occupancy, at least 5 percent, but not less than one toilet room for each use at each cluster shall comply with 603. *Accessible* toilet rooms shall be identified by the International Symbol of Accessibility complying with 703.7.
5. In medical care *facilities*, this section does not apply to toilet *facilities* and bathing *facilities* that are part of patient or resident sleeping rooms not required to be *accessible* in accordance with F223.
6. In *transient lodging facilities*, this section does not apply to toilet *facilities* and bathing *facilities* that are part of guest rooms not required to be *accessible* in accordance with F224.
7. In detention and correctional *facilities*, this section does not apply to toilet *facilities* and bathing *facilities* that do not serve holding cells or housing cells required to be *accessible* in accordance with F233.
8. In residential *facilities*, this section does not apply to toilet *facilities* and bathing *facilities* that are part of *dwelling units* that are not required to be *accessible.*

F213.2.1 Unisex Toilet and Bathing Rooms. A unisex toilet room shall comply with 603, shall contain one water closet and one lavatory, and the door shall have a privacy latch. A unisex bathing room shall comply with 603 and shall contain at least one shower or bathtub.

F213.2.2 Signs. Where existing toilet or bathing rooms are *altered* and not made *accessible*, directional *signs* indicating the location of the nearest *accessible* toilet or bathing room within the *facility* shall be provided. Such *signs* shall comply with 703.4 and shall include the International Symbol of Accessibility complying with 703.7. Where existing toilet or bathing rooms are *altered* and not made *accessible*, the *accessible* toilet or bathing room shall be identified by the International Symbol of Accessibility complying with 703.7.

F213.3 Fixtures and Accessories. Plumbing fixtures and accessories provided in toilet or bathing rooms required to be *accessible* by F213.2 shall comply with F213.3.

F213.3.1 Toilet Compartments. Where toilet compartments are provided, at least one shall be a *wheelchair accessible* compartment complying with 604.8.1. Where six or more toilet compartments are provided, a non-wheelchair *accessible* compartment complying with 604.8.2 shall be provided in addition to the compartment complying with 604.8.1. Water closets in such compartments shall comply with 604.

F213.3.2 Water Closets. Where water closets are provided, but are not in toilet compartments, at least one shall comply with 604.

F213.3.3 Urinals. Where urinals are provided, at least one shall comply with 605.

F213.3.4 Lavatories. Where lavatories are provided, at least one shall comply with 606. Where only one *accessible* lavatory is provided, it shall not be located in a toilet compartment.

F213.3.5 Mirrors. Where mirrors are provided, at least one shall comply with 603.3.

F213.3.6 Operable Parts and Dispensers. Where *operable parts*, dispensers, receptacles or other equipment are provided, at least one of each type shall comply with 309.

F213.3.7 Bathing Facilities. Where bathtubs or showers are provided, at least one bathtub complying with 607 or at least one shower complying with 608 shall be provided.

F214 Laundry Equipment

F214.1 General. Where washing machines or clothes dryers are provided in *spaces* required to be *accessible*, *accessible* washing machines and clothes dryers complying with 611 shall be provided in accordance with F214.

F214.2 Washing Machines. Where three or fewer washing machines are provided, at least one shall be *accessible*. Where more than three washing machines are provided, at least two shall be *accessible*.

F214.3 Dryers. Where three or fewer clothes dryers are provided, at least one shall be *accessible*. Where more than three clothes dryers are provided, at least two shall be *accessible*.

F215 Emergency Alarm Systems

F215.1 Fire Alarms. Where fire alarm systems are provided in *public use* or *common use* areas, the alarm shall provide a system with both audible and visual signals complying with 702. Guest rooms required by F224 to have *accessible* alarms shall comply with 702.3.6.

Advisory F215.1
Unlike audible alarms, visual alarms must be located within the *space* they serve so that the signal is visible.

F215.2 Other Emergency Alarm Systems. Where emergency warning systems other than for fire are provided in *public use* or *common use* areas, a system with both audible and visual signals shall be provided.

Advisory F215.2
Facility alarm systems (other than fire alarm systems) that do not instruct occupants to evacuate the *facility*, such as those used for tornado warnings and other emergencies, must provide both audible and visual notification, but are not held to the technical criteria for alarms in section 702. Such alarms need to be differentiated in their signal from fire alarms systems.

F216 Signs

F216.1 General. *Signs* shall be provided in accordance with F216 and shall comply with 703.

EXCEPTION: In detention and correctional *facilities*, *signs* not located in *public use* areas shall not be required to comply.

F216.2 Permanent Designations. Where exterior *signs* are provided as permanent designations of permanent interior rooms and *spaces* at the door to the *space* they serve, the *signs* shall be *tactile* and shall comply with 703.2. Where interior *signs* are provided as permanent designations of permanent interior rooms and *spaces*, the *signs* shall be *tactile* and shall comply with 703.2. Where *pictograms* are provided as permanent designations of permanent interior rooms and *spaces*, the *pictograms* shall comply with 703.6 and shall have *tactile* text descriptors complying with 703.2.

Advisory F216.2
"Permanent designations" label interior rooms or *spaces* where the designation is not likely to change over time. Examples include, interior signs labeling restrooms, room and floor numbers or letters, and room names. *Tactile* text descriptors are required for *pictograms* that are provided to label or identify a permanent room or *space*. *Pictograms* that provide information about a room or *space*, such as "no smoking," occupant logos, and accessibility designations, are not required to have text descriptors.

EXCEPTION: This requirement shall not apply to signs used to designate *building* addresses or *building* or *facility* names.

F216.3 Directional and Informational Signs. *Signs* that provide direction to or information about permanent interior *spaces* and *facilities* of the *site* shall comply with 703.4.

Advisory F216.3
Information about a permanent room or space includes rules of conduct, occupant load, and similar *signs*. *Signs* providing direction to permanent rooms or spaces include those that identify egress routes.

EXCEPTION: *Building* directories, menus, and temporary *signs* are not required to comply with 703.4.

F216.4 Exit Doors. Exit doors shall be identified by *tactile signs* complying with 703.2.

F217 Telephones

F217.1 General. Where coin-operated public pay telephones, coinless public pay telephones, public *closed-circuit telephones*, or other types of public telephones are provided, *accessible* public telephones shall be provided in accordance with F217 for each type of public telephone provided. For purposes of this section, a bank of telephones shall be considered two or more adjacent telephones.

F217.2 Wheelchair Accessible Telephones. Where public telephones are provided, *wheelchair accessible* telephones complying with 704.2 shall be provided in accordance with Table F217.2.

Table F217.2 Wheelchair Accessible Telephones

Number of Telephones Provided on a Floor or Level	Minimum Required Number of Wheelchair Accessible Telephones
1 or more single units	1 per floor or level
1 bank	1 per floor or level
2 or more banks	1 per bank[1]

1. At Least one telephone per floor shall provide a forward approach complying with 704.2.1.2, except for exterior installations where dial tone first service is available.

F217.3 Volume Controls. All *wheelchair accessible* telephones required by F217.2 and 25 percent, but not less than one, of all other public telephones provided shall have volume control complying with 704.3. Such telephones shall be identified by *signs* containing *pictograms* of a telephone handset with radiating sound waves complying with 703.7.

EXCEPTION: *Pictograms* are not required where all public telephones have volume control.

F217.4 TTYs. *TTYs* complying with 704.4 shall be provided in accordance with F217.4.

Advisory F217.4
Separate requirements are provided based on the number of public pay telephones provided at a bank of telephones, within a floor, a *building*, or on a site. One *TTY* can be used to satisfy more than one of these requirements. For example, a *TTY* required for a *building* can be used to satisfy the requirement for at least one *TTY* on a site. Consideration should be given to phone systems that can accommodate both digital and analog transmissions for compatibility with digital and analog *TTYs*.

F217.4.1 Bank Requirement. Where four or more public pay telephones are provided at a bank of telephones, at least one public *TTY* shall be provided at that bank.

EXCEPTION: *TTYs* are not required at banks of telephones located within 200 feet (61 m) of, and on the same floor as, a bank containing a public *TTY*.

F217.4.2 Floor Requirement. Where at least one public pay telephone is provided on a floor of a *building*, at least one public *TTY* shall be provided on that floor.

F217.4.3 Building Requirement. Where at least one public pay telephone is provided in a *public use* area of a *building*, at least one public *TTY* shall be provided in the *building* in a *public use* area.

F217.4.4 Site Requirement. Where four or more public pay telephones are provided on a *site*, at least one public *TTY* shall be provided on the *site*.

F217.4.5 Rest Stops, Emergency Roadside Stops, and Service Plaza. Where a public pay telephone is provided at a public rest stop, emergency roadside stop or service plaza, at least one public *TTY* shall be provided.

F217.4.6 Hospitals. Where a public pay telephone is provided serving a hospital emergency room, hospital recovery room, or hospital waiting room, at least one public *TTY* shall be provided at each such location.

F217.4.7 Transportation Facilities. Transportation *facilities* shall be provided with *TTYs* in accordance with 1003.2.6 and 1004.2, in addition to the *TTYs* required by F217.4.

F217.4.8 Detention and Correctional Facilities. In detention and correctional *facilities*, where a public pay telephone is provided in a secured area used only by detainees or inmates and security personnel, then at least one *TTY* shall be provided in at least one such area.

F217.4.9 Signs. Identification and directional *signs* shall be provided in accordance with F217.4.9.

F217.4.9.1 Identification Signs. Public *TTYs* shall be identified by the International Symbol of *TTY* complying with 703.7.

F217.4.9.2 Directional Signs. Directional *signs* indicating the location of the nearest public *TTY* shall be provided at all banks of public pay telephones not containing a public *TTY*. In addition, where *signs* provide direction to public pay telephones, they shall also provide direction to public *TTYs*. Directional *signs* shall comply with 703.4 and shall include the International Symbol of *TTY* complying with 703.7.

F217.5 Shelves for Portable TTYs. Where a bank of telephones in the interior of a *building* consists of three or more public pay telephones, at least one public pay telephone at the bank shall be provided with a shelf and an electrical outlet in accordance with 704.5.

EXCEPTIONS: 1. This requirement does not apply to the secured areas of detention and correctional *facilities* where shelves and outlets are prohibited for purposes of security or safety.
2. The shelf and electrical outlet shall not be required at a bank of telephones with a *TTY*.

F218 Transportation Facilities

F218.1 General. Transportation *facilities* shall comply with Chapter 10.

F219 Assistive Listening Systems

F219.1 General. Assistive listening systems shall be provided in accordance with F219 and shall comply with 706.

F219.2 Required Systems. In each *assembly area* where audible communication is integral to the use of the *space*, an assistive listening system shall be provided.

EXCEPTION: Other than in courtrooms, this requirement shall not apply where there is no audio amplification.

F219.3 Receivers. Receivers complying with 706.3 shall be provided for assistive listening systems in accordance with Table F219.3. Twenty five percent minimum of receivers, but not less than two, shall be hearing-aid compatible in accordance with 706.4.

Table F219.3 Receivers for Assistive Listening Systems

Capacity of Seating in Assembly Area	Minimum Required Number of Receivers	Minimum Number of Required Receivers Required to be Hearing-aid Compatible
50 or less	2	2
51 to 200	2 plus 1 per 25 seats over 50 seats[1]	2
201 to 500	2 plus 1 per 25 seats over 50 seats[1]	1 per 4 receivers[1]
501 to 1000	20 plus 1 per 33 seats over 500 seats[1]	1 per 4 receivers[1]
1001 to 2000	35 plus 1 per 50 seats over 1000 seats[1]	1 per 4 receivers[1]
2001 and over	55 plus 1 per 100 seats over 2000 seats[1]	1 per 4 receivers[1]

1. or fraction thereof

F219.4 Signs. Where assistive listening systems are provided, *signs* shall be provided to inform patrons of the availability of the system. The *signs* shall be located at ticket offices or windows, where ticket offices or windows are provided. The *signs* shall comply with 703.4 and shall include the International Symbol of Access for Hearing Loss complying with 703.7.

F220 Automatic Teller Machines and Fare Machines

F220.1 General. Where automatic teller machines or self-service fare vending, collection, or adjustment machines are provided, at least one machine of each type at each location where such machines are provided shall comply with 707. Where bins are provided for envelopes, waste paper, or other purposes, at least one of each type shall comply with 905.

F221 Assembly Seating

F221.1 General. In a motion picture house, theater, concert hall, stadium, arena, auditorium, convention center, lecture hall, courtroom, legislative chamber, public meeting room, hearing room, or similar *assembly area* that contains seating, *wheelchair spaces*, companion seats, and designated aisle seats shall be provided and shall comply with F221 and 802 in each type of seating area.

F221.2 Wheelchair Spaces. *Wheelchair spaces* shall be provided in all *facilities* identified in F221.1 and in each luxury box, club box, and suite within these *facilities*. *Wheelchair spaces* shall be integrated throughout these seating areas.

F221.2.1 Number. *Wheelchair spaces* shall be provided in accordance with Table F221.2.1.

Table F221.2.1 Number of Wheelchair Spaces

Number of Seats[1]	Minimum Required Number of Wheelchair Spaces
4 to 25	1
26 to 50	2
51 to 150	4
151 to 300	5
301 to 500	6
501 and over	6, plus 1 for each 100, or fraction thereof, over 500

1. installed seats plus required *wheelchair spaces*

F221.3 Readily Removable Companion Seats. One readily removable companion seat complying with 802.7 shall be provided for each *wheelchair space*. Each required readily removable companion

seat shall provide an additional *wheelchair space* complying with 802.1, 802.2, 802.3, 802.4, 802.5, and 802.9 when removed.

EXCEPTIONS: 1. Existing companion seats shall be permitted to be fixed and shall not be required to provide *wheelchair spaces*.
2. Companion seats shall be permitted to be fixed and shall not be required to provide wheelchair *spaces* where the seating capacity is 300 or fewer.

F221.4 Designated Aisle Seats. Aisle seats complying with 802.8 shall be provided in all *assembly areas*. *Signs* notifying patrons of the availability of such seats shall be posted at the ticket office.

EXCEPTION: Designated aisle seats are not required in luxury boxes, club boxes, or suites.

F221.4.1 Number. One designated aisle seat complying with 802.8 per 100 seats, or fraction thereof shall be provided.

F221.4.2 Location. At least one of each four required designated aisle seats shall be located on an *accessible route*. All other required designated aisle seats shall be located not more than two rows from an *accessible route* serving such seats.

F221.5 Vertical Access. Where *wheelchair spaces* or designated aisle seats share a common *accessible route* that includes vertical access by means of elevators or platform lifts, elevators or platform lifts shall be provided in such number, capacity, and speed as to provide a level of service equivalent to that provided in the same seating area to patrons who can use stairs or other means of vertical access.

F222 Dressing, Fitting, and Locker Rooms

F222.1 General. Where dressing rooms, fitting rooms, or locker rooms are provided, at least 5 percent, but not less than one, of each type of use in each cluster provided shall comply with 803.

EXCEPTION: In *alterations*, where it is *technically infeasible* to provide *accessible* rooms in accordance with F222.1, one room for each sex on each level shall be *accessible*. Where only unisex rooms are provided, an *accessible* unisex room shall be permitted.

F223 Medical Care Facility Patient or Resident Sleeping Rooms

F223.1 General. In licensed medical and long-term care *facilities* where people receive physical or medical treatment or care and where the period of stay exceeds twenty-four hours, *accessible* patient or resident sleeping rooms shall be provided in accordance with F223 and shall comply with 805.

F223.1.1 Alterations. Where sleeping rooms are *altered* or *added*, the requirements of F223 shall apply only to the sleeping rooms being *altered* or *added* until the number of *accessible* sleeping rooms complies with the minimum number required for new construction.

Advisory F223.1.1
In *alterations* and *additions*, the minimum required number is based on the total number of sleeping rooms altered or added instead of on the total number of sleeping rooms provided in a *facility*. As a *facility* is altered over time, *accessible* sleeping rooms may be dispersed among patient care areas such as pediatrics, cardiac care, maternity, and other units. In this way, people with disabilities may have access to the full-range of services provided by a medical care *facility*.

F223.2 Hospitals. In general purpose hospitals, psychiatric *facilities* and detoxification *facilities*, at least 10 percent, but not less than one, of the patient sleeping rooms shall be *accessible*.

F223.3 Rehabilitation Facilities. In hospitals and rehabilitation *facilities* that specialize in treating conditions that affect mobility, and in units within hospitals and rehabilitation *facilities* which specialize in treating conditions that affect mobility, 100 percent of the patient sleeping rooms shall be *accessible*.

Advisory F223.3
Conditions that affect mobility include conditions requiring the use or assistance of a brace, cane, crutch, prosthetic device, *wheelchair*, or powered mobility aid; arthritic, neurological, or orthopedic conditions that severely limit one's ability to walk; respiratory diseases and other conditions which may require the use of portable oxygen; and cardiac conditions that impose significant functional limitations. *Facilities* that may provide, but that do not specialize, in the treatment of such conditions, such as general rehabilitation hospitals, are not subject to this requirement but are subject to section F223.2.

F223.4 Long Term Care Facilities. In long term care *facilities*, at least 50 percent, but not less than one, of the resident sleeping rooms shall be *accessible*.

F224 Transient Lodging Guest Rooms

F224.1 General. *Transient lodging facilities* shall provide guest rooms in accordance with F224.

F224.1.1 Alterations. Where guest rooms are *altered* or *added*, the requirements of F224 shall apply only to the guest rooms being *altered* or *added* until the number of *accessible* guest rooms complies with the minimum number required for new construction.

Advisory F224.1.1

In *alterations* and *additions*, the minimum required number of *accessible* guest rooms is based on the total number of guest rooms altered or added instead of the total number of guest rooms provided in a *facility*. Typically, each *alteration* of a *facility* is limited to a particular portion of the *facility*. When *accessible* guest rooms are added as a result of subsequent *alterations*, compliance with F224.5 is likely to be achieved.

F224.1.2 Guest Room Doors and Doorways. *Entrance* and passage doors and doorways into and within all guest rooms shall provide clear width complying with 404.2.3.

Advisory F224.1.2

Because of the social interaction that often occurs in lodging *facilities*, an *accessible* clear opening width is required for doors and doorways to and within all guest rooms, including those not required to be *accessible*. This applies to all doors, including bathroom doors, that allow full passage. Other requirements for doors and doorways in section 404 do not apply to guest rooms not required to be *wheelchair accessible*.

F224.2 Accessible Guest Rooms. In *transient lodging facilities*, *accessible* guest rooms shall be provided in accordance with Table F224.2 and shall comply with 806.2

Table F224.2 Accessible Guest Rooms

Total Number of Guest Rooms Provided	Minimum Required Number of Accessible Rooms Without Roll-in Showers	Minimum Required Number of Accessible Rooms With Roll-in Showers	Total Number of Required Accessible Rooms
1 to 25	1	0	1
26 to 50	2	0	2
51 to 75	3	1	4
76 to 100	4	1	5
101 to 150	5	2	7
151 to 200	6	2	8

Table F224.2 Accessible Guest Rooms

Total Number of Guest Rooms Provided	Minimum Required Number of Accessible Rooms Without Roll-in Showers	Minimum Required Number of Accessible Rooms With Roll-in Showers	Total Number of Required Accessible Rooms
201 to 300	7	3	10
301 to 400	8	4	12
401 to 500	9	4	13
501 to 1000	2 percent of total	1 percent of total	3 percent of total
1001 and over	20 plus 1 for each 100, or fraction thereof, over 1000	10 plus 1 for each 100, or fraction thereof, over 1000	30 plus 2 for each 100, or fraction thereof, over 1000

F224.3 Accessible Beds. In rooms or *spaces* having four or more beds, the number of beds in the room or *space* required to have clear floor *space* complying with 806.2.3 shall comply with Table F224.3.

Table F224.3 Accessible Beds

Total Number of Beds in a Guest Room	Minimum Required Number of Accessible Beds
4 to 25	1
26 to 50	2
51 to 75	4
76 to 100	5
101 to 150	7
151 to 200	8
201 to 300	10
301 to 400	12
401 to 500	13
501 to 1000	3 percent of total
1001 and over	30 plus 1 for each 100, or fraction thereof, over 1000

F224.4 Communication Features. In *transient lodging facilities*, at least fifty percent of the total number of guest rooms shall have *accessible* communication features complying with 806.3.

F224.5 Dispersion. Fifty percent, but not less than one, of the guest rooms required to comply with 806.2 shall also comply with 806.3. Guest rooms required to comply with 806.2 and guest rooms required to comply with 806.3 shall be dispersed among the various classes of guest rooms and shall provide choices of types of rooms, types of beds, and other amenities comparable to the choices provided to other guests. Where the minimum number of rooms or beds required to be *accessible* is not sufficient to allow for complete dispersion, rooms or beds shall be dispersed in the following priority: room type, bed type, and amenities.

Advisory F224.5
Factors to be considered in providing an equivalent range of options may include, but are not limited to, room size, bed size, cost, view, bathroom fixtures such as hot tubs and spas, smoking and nonsmoking, the number of beds, and the number of rooms provided.

F225 Self-Service Storage Facilities

F225.1 General. *Self-service storage facilities* shall provide *accessible* individual, self-storage *spaces* in accordance with Table F225.1.

Table F225.1 Accessible Self-Service Storage Facilities

Total Spaces in Facility	Minimum Required Number of Accessible Spaces
1 to 200	5 percent, but not less than 1
201 and over	10 plus 2 percent of total number of units over 200

F225.2 Dispersion. *Accessible* individual, self-service storage *spaces* shall be dispersed throughout the various classes of *spaces* provided. Where more classes of *spaces* are provided than the number of required *accessible spaces*, the number of *accessible spaces* shall not be required to exceed that required by Table F225.1. *Accessible spaces* shall be permitted to be dispersed in a single *building* of a multi-building *facility*.

F226 Dining Surfaces and Work Surfaces

F226.1 General. Where dining surfaces and work surfaces are provided in *accessible spaces*, at least five percent, but not less than one, of the seating and standing *spaces* at the dining surfaces and work surfaces in a room or *space* shall comply with 902.

F226.2 Dispersion. *Accessible* dining surfaces and work surfaces shall be distributed throughout the *space* or *facility* containing such *elements*.

F227 Sales and Service Counters

F227.1 General. Where sales or service counters are provided, they shall be *accessible* in accordance with F227.

F227.2 Check-Out Aisles. Where check-out aisles are provided, *accessible* check-out aisles shall be provided in accordance with Table F227.2. Where check-out aisles serve different functions, at least one *accessible* check-out aisle shall be provided for each function. Where check-out aisles are dispersed throughout the *building* or *facility*, *accessible* check-out aisles also shall be dispersed. Check-out aisles required to be *accessible* shall comply with 904.3.

EXCEPTION: Where check-out aisles are *altered* in *facilities,* at least one of each check-out aisle serving each function shall be made *accessible* until the number of *accessible* check-out aisles complies with F227.2.

Table F227.2 Accessible Check-Out Aisles

Total Check-Out Aisles of Each Function	Minimum Required Number of Accessible Check-Out Aisles of Each Function
1 to 4	1
5 to 8	2
9 to 15	3
16 and over	3 plus 20 percent of additional aisles

F227.2.1 Identification. *Accessible* check-out aisles shall be identified by the International Symbol of Accessibility complying with 703.7, unless all check-out aisles in the *facility* are *accessible*. The *sign* shall be above the check-out aisle in the same location as the check-out aisle number or type of check-out identification.

F227.3 Point of Sales and Service Counters. Where point of sales and service counters are provided for sales or distribution of goods or services, at least one of each type provided shall comply with 904.4.

Where such counters are dispersed throughout the *building* or *facility*, the *accessible* counters also shall be dispersed.

Advisory F227.3
Types of counters that provide different services in the same *facility* include, but are not limited to, order, pick-up, express, and returns. One continuous counter can be used to provide different types of service. For example, order and pick-up are different services. It would not be acceptable to provide access only to the part of the counter where orders are taken when orders are picked-up at a different location on the same counter. Both the order and pick-up section of the counter must be *accessible*.

F227.4 Food Service Lines. Food service lines shall comply with 904.5. Where self-service shelves are provided, at least 50 percent, but not less than one, of each type provided shall comply with 308.

F227.5 Queues and Waiting Lines. Queues and waiting lines servicing *accessible* counters or check-out aisles shall comply with 403.

F228 Storage

F228.1 General. Where storage *elements* are provided in *accessible spaces*, at least one of each type shall comply with 905.

Advisory F228.1
Fixed or built-in storage *elements* include, but are not limited to, closets, cabinets, shelves, and drawers.

F228.2 Lockers. Where lockers are provided in *accessible spaces*, at least five percent, but not less than one, of each type shall comply with 905.

F228.3 Self-Service Shelving. Self-service shelves shall be located on an *accessible route* complying with 402. Self-service shelving shall not be required to comply with reach range provisions of 308.

Advisory F228.3
Self-service shelves include, but are not limited to, library, store, or post office shelves.

F228.4 Coat Hooks and Folding Shelves. Where coat hooks or folding shelves are provided in inaccessible toilet rooms, toilet compartments, or in dressing, fitting or locker rooms, at least one of each type shall be provided in *accessible* toilet rooms, toilet compartments or dressing, fitting and locker rooms.

F229 Depositories, Vending Machines, Change Machines, and Mail Boxes

F229.1 Depositories, Vending Machines, and Change Machines. Where provided, at least one of each type of depository, vending machine, and change machine shall comply with 309.

Advisory F229.1
Depositories include, but are not limited to, night receptacles in banks, post offices, video stores, and libraries.

EXCEPTION: Drive-up-only depositories shall not be required to comply with this section.

F229.2 Mail Boxes. Where *mail boxes* are provided in an interior location, at least 5 percent, but not less than one, of each type shall comply with 309. In residential *facilities*, where *mail boxes* are provided for each *dwelling unit*, *mail boxes* complying with 309 shall be provided for each *dwelling unit* required to be *accessible* by F234.1.1.

F230 Windows

F230.1 Windows. Where glazed openings are provided in *accessible* rooms or *spaces* for operation by the occupants, at least one opening shall comply with 309. In accessible rooms or *spaces,* each glazed opening required by the *administrative authority* to be operable shall comply with 309.

F231 Two-Way Communication Systems

F231.1 General. Where a two-way communication system is provided to gain admittance to a *building* or *facility* or to restricted areas within a *building* or *facility*, the system shall comply with 708.

F232 Judicial Facilities

F232.1 General. Judicial *facilities* shall comply with F232.

F232.2 Courtrooms. Each courtroom shall comply with F232.2.

F232.2.1 Raised or Depressed Areas. Where provided, areas that are raised or depressed and accessed by *ramps* or *wheelchair* (platform) lifts with entry *ramps* shall provide unobstructed turning *space* complying with 304.

F232.2.2 Jury Boxes and Witness Stands. Each jury box and witness stand shall have, within its defined area, clear floor *space* complying with 305.

EXCEPTION: In *alterations*, *accessible wheelchair spaces* are not required to be located within the defined area of raised jury boxes or witness stands and shall be permitted to be located outside these *spaces* where *ramp* or lift access poses a hazard by restricting or projecting into a *means of egress* required by the appropriate *administrative authority*.

F232.2.3 Judges' Benches and Courtroom Stations. Judges' benches, clerks' stations, bailiffs' stations, deputy clerks' stations, court reporters' stations and litigants' and counsel stations shall comply with 902.

F232.3 Holding Cells. Where provided, central holding cells and court-floor holding cells shall comply with F232.3.

F232.3.1 Central Holding Cells. Where separate central holding cells are provided for adult male, juvenile male, adult female, or juvenile female, one of each type shall comply with 807. Where central-holding cells are provided and are not separated by age or sex, at least one cell complying with 807.2 shall be provided.

F232.3.2 Court-Floor Holding Cells. Where separate court-floor holding cells are provided for adult male, juvenile male, adult female, or juvenile female, each courtroom shall be served by one cell of each type complying with 807. Where court-floor holding cells are provided, which are not separated by age or sex, courtrooms shall be served by at least one cell complying with 807.2. Cells may serve more than one courtroom.

F232.4 Visiting Areas. Visiting areas shall comply with F232.4.

F232.4.1 Cubicles and Counters. At least five percent, but not less than one, of cubicles shall comply with 902 on both the visitor and detainee sides. Where counters are provided, at least one shall comply with 904.4.2 on both the visitor and detainee sides.

EXCEPTION: This requirement shall not apply to the detainee side of cubicles or counters at non-contact visiting areas not serving accessible holding cells.

F232.4.2 Partitions. Solid partitions or security glazing that separate visitors from detainees shall comply with 904.6.

F233 Detention and Correctional Facilities

F233.1 General. *Buildings*, *facilities*, or portions thereof, in which people are detained for penal or correction purposes, or in which the liberty of the inmates is restricted for security reasons shall comply with F233.

Advisory F233.1
Detention *facilities* include, but are not limited to, jails, detention centers, and holding cells in police stations. Correctional *facilities* include, but are not limited to, prisons, reformatories, and correctional centers.

F233.2 General Holding Cells and General Housing Cells or Rooms. *Accessible* general holding cells and *accessible* general housing cells or rooms shall be provided in accordance with F233.2.

Advisory F233.2
Accessible cells or rooms should be dispersed among different levels of security, housing categories, and holding classifications (e.g., male/female and adult/juvenile) to facilitate access. Many detention and correctional *facilities* are designed so that certain areas (e.g., "shift" areas) can be adapted to serve as different types of housing according to need. For example, a shift area serving as a medium-security housing unit might be redesignated for a period of time as a high-security housing unit to meet capacity needs. Placement of *accessible* cells or rooms in shift areas may allow additional flexibility in meeting requirements for dispersion of *accessible* cells or rooms.

EXCEPTION: Altered cells or rooms shall be *accessible* in accordance with regulations issued by the appropriate Federal agency having authority under section 504 of the Rehabilitation Act of 1973.

F233.2.1 Accessible Cells or Rooms. At least two percent, but not less than one, of the total number of cells or rooms in a *facility* shall comply with 807.2.

F233.2.2 Accessible Beds. In cells or rooms having four or more beds, the number of beds in the cell or room required to have clear floor *space* complying with 807.2 shall comply with Table F224.3.

F233.2.3 Communication Features. At least two percent, but not less than one, of the total number of cells or rooms equipped with audible emergency alarm systems or permanently installed telephones within the cell or room shall comply with 807.3.

F233.2.4 Dispersion. Fifty percent, but not less than one, of the cells or rooms required to comply with 807.2 shall also comply with 807.3.

F233.3 Special Holding Cells and Special Housing Cells or Rooms. Where special holding cells or special housing cells or rooms are provided, at least one serving each purpose shall comply with 807.2. Cells or rooms subject to this requirement include, but are not limited to those used for purposes of orientation, protective custody, administrative or disciplinary detention or segregation, detoxification, and medical isolation.

EXCEPTIONS: 1. Cells or rooms specially designed without protrusions and that are used solely for purposes of suicide prevention shall not be required to comply with 604.5.
2. Altered cells or rooms shall be *accessible* in accordance with regulations issued by the appropriate Federal agency having authority under section 504 of the Rehabilitation Act of 1973.

F233.4 Medical Care Facilities. Patient bedrooms or cells required to be *accessible* by F223 shall be provided in addition to any medical isolation cells required to be *accessible* under F233.3.

F233.5 Visiting Areas. Visiting areas shall comply with F233.5.

F233.5.1 Cubicles and Counters. At least five percent, but not less than one, of cubicles shall comply with 902 on both the visitor and detainee sides. Where counters are provided, at least one shall comply with 904.4.2 on both the visitor and detainee or inmate sides.

EXCEPTION: This requirement shall not apply to the inmate or detainee side of cubicles or counters at non-contact visiting areas not serving *accessible* holding or housing cells or rooms.

F233.5.2 Partitions. Solid partitions or security glazing that separate visitors from detainees shall comply with 904.6.

F234 Accessible Residential Facilities

F234.1 General. Residential *facilities* shall provide *dwelling units* in accordance with F234.

Advisory F234.1
This section outlines the requirements for residential *facilities* subject to the Architectural Barriers Act of 1968. The *facilities* covered by this section, as well as other *facilities* not addressed or covered by these sections, may still be subject to other Federal laws such as the Fair Housing Act (42 U.S.C. 3604 et. seq.) and Section 504 of the Rehabilitation Act of 1973 (29 U.S.C. 794). For example, the Fair Housing Act requires that all residential *buildings* having four or more units, regardless of whether they are privately owned or federally assisted, include certain features of *accessible* and adaptable design according to guidelines established by the U. S. Department of Housing and Urban Development (HUD). Further information on these laws and the appropriate regulations should be consulted before proceeding with the design and construction of residential housing which may be covered by such laws.

F234.1.1 Accessible Dwelling Units. In residential *facilities*, at least five percent, but not less than one unit, of the total number of *dwelling units* in a *facility* shall comply with 1101 and 1102.

EXCEPTION: Where residential *facilities* contain four or less *dwelling units*, at least five percent, but not less than one unit, of the total number of *dwelling units* in the *project* shall comply with 1101 and 1102.

F234.1.2 Accessible Dwelling Units, Alterations. Where dwelling units are *altered* or *added*, the requirements of F234 shall apply only to the *dwelling units* being *altered* or *added* until the number of *accessible dwelling units* complies with the minimum number required for new construction.

F234.1.3 Communication Features. In residential *facilities,* at least two percent, but not less than one unit, of the total number of *dwelling units* in a *facility* shall comply with 1101 and 1103.

EXCEPTION: Where residential *facilities* contain four or less *dwelling units*, at least two percent, but not less than one unit, of the total number of *dwelling units* in the *project* shall comply with 1101 and 1103.

F234.1.4 Communication Features, Alterations. Where *dwelling units* are *altered* or *added*, the requirements of F234 shall apply only to the *dwelling units* being *altered* or *added* until the number of *dwelling units* with *accessible* communication features complies with the minimum number required for new construction.

F234.1.5 Dispersion. *Dwelling units* required to comply with 1102 and *dwelling units* required to comply with 1103 shall be dispersed among the various types of *dwelling units* in the *facility* and shall provide choices of *dwelling units* comparable to and integrated with those available to other residents.

EXCEPTION: Single level *dwelling units* shall be permitted where *spaces* and amenities are equivalent to those provided in multi-level *dwelling units*.

TABLE OF CONTENTS

CHAPTER 3: BUILDING BLOCKS 3
301 General 3
302 Floor or Ground Surfaces 3
303 Changes in Level 4
304 Wheelchair Turning Space 5
305 Clear Floor or Ground Space 7
306 Knee and Toe Clearance 9
307 Protruding Objects 11
308 Reach Ranges 14
309 Operable Parts 17

CHAPTER 4: ACCESSIBLE ROUTES. 19
401 General 19
402 Accessible Routes 19
403 Walking Surfaces 19
404 Doors and Doorways 21
405 Ramps 30
406 Curb Ramps 33
407 Elevators 36
408 Wheelchair (Platform) Lifts 54
409 Accessible Means of Egress 55
410 Areas of Refuge 55

CHAPTER 5: GENERAL SITE AND BUILDING ELEMENTS 59
501 General 59
502 Parking Spaces 59
503 Passenger Loading Zones 61
504 Stairways 62
505 Handrails 63

CHAPTER 6: PLUMBING ELEMENTS AND FACILITIES. 69
601 General 69
602 Drinking Fountains and Water Coolers 69
603 Toilet and Bathing Rooms 71
604 Water Closets and Toilet Compartments 72
605 Urinals 82
606 Lavatories and Sinks 83
607 Bathtubs 84
608 Shower Compartments 87
609 Grab Bars 93

TABLE OF CONTENTS TECHNICAL

610 Seats 94
611 Laundry Equipment 97

CHAPTER 7: COMMUNICATION ELEMENTS AND FEATURES 99
701 General 99
702 Fire Alarm Systems 99
703 Signs 109
704 Telephones 120
705 Detectable Warnings 122
706 Assistive Listening Systems 123
707 Automatic Teller Machines and Fare Machines 124
708 Two-Way Communication Systems 127

CHAPTER 8: SPECIAL ROOMS, SPACES, AND ELEMENTS 129
801 General 129
802 Wheelchair Spaces and Designated Aisle Seats in Assembly Areas 129
803 Dressing, Fitting, and Locker Rooms 132
804 Sinks, Kitchens, Kitchenettes, and Wet Bars 133
805 Medical Care Facility Patient or Resident Sleeping Rooms 134
806 Transient Lodging Guest Rooms 134
807 Holding Cells and Housing Cells or Rooms 135

CHAPTER 9: BUILT-IN FURNISHINGS AND EQUIPMENT 137
901 General 137
902 Dining Surfaces and Work Surfaces 137
903 Benches 138
904 Sales and Service Counters 139
905 Storage 143

CHAPTER 10: TRANSPORTATION FACILITIES 145
1001 General 145
1002 Bus Stops and Terminals 145
1003 Facilities and Stations 147
1004 Airports 152

CHAPTER 11: RESIDENTIAL FACILITIES 155
1101 General 155
1102 Accessible Dwelling Units 155
1103 Dwelling Units with Accessible Communication Features 167

CHAPTER 3: BUILDING BLOCKS

301 General

301.1 Scope. The provisions of this chapter apply where required by Chapter 2 or by Chapters 4 through 11.

302 Floor or Ground Surfaces

302.1 General. Floor and ground surfaces shall be stable, firm, and slip resistant and shall comply with 302.

Advisory 302.1
A stable surface is one that remains unchanged by contaminants or applied force, so that when the contaminant or force is removed, the surface returns to its original condition. A firm surface resists deformation by either indentations or particles moving on its surface. A slip-resistant surface provides sufficient frictional counterforce to the forces exerted in walking to permit safe ambulation.

302.2 Carpet. Carpet or carpet tile shall be securely attached and shall have a firm cushion, pad, or backing or no cushion or pad. Carpet or carpet tile shall have a level loop, textured loop, level cut pile, or level cut/uncut pile texture. Pile height shall be 1/2 inch (13 mm) maximum. Exposed edges of carpet shall be fastened to floor surfaces and shall have trim along the entire length of the exposed edge. Carpet edge trim shall comply with 303.

Figure 302.2

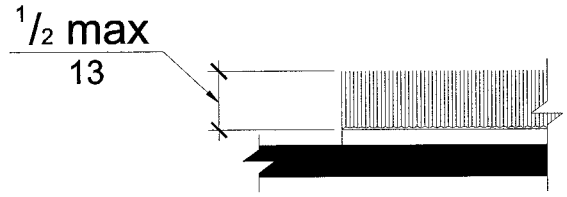

Advisory 302.2

Carpets and permanently affixed mats can significantly increase the amount of force (roll resistance) needed to propel a *wheelchair* over a surface. The firmer the carpeting and backing, the lower the roll resistance. A pile thickness up to 1/2 inch (13 mm) (measured to the backing, cushion, or pad) is allowed. although a lower pile provides easier *wheelchair* maneuvering. If a backing, cushion or pad is used, it must be firm. Preferably, carpet pad should not be used because the soft padding increases roll resistance.

302.3 Openings. Openings in floor or ground surfaces shall allow passage of a sphere not more than 1/2 inch (13 mm) diameter except as allowed in 407.4.7, 408, and 1003. Elongated openings shall be placed so that the long dimension is perpendicular to the dominant direction of travel.

Figure 302.3

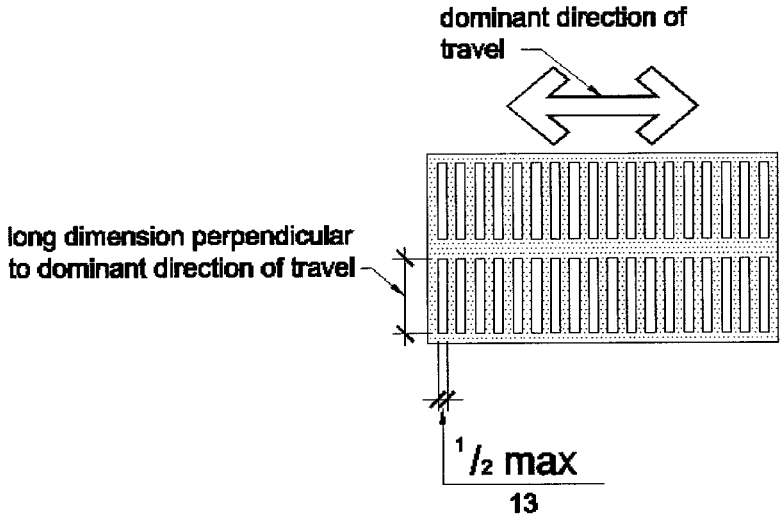

303 Changes in Level

303.1 General. Where changes in level are permitted in floor or ground surfaces, they shall comply with 303.

303.2 Vertical. Changes in level of 1/4 inch (6.4 mm) high maximum shall be permitted to be vertical.

Figure 303.2

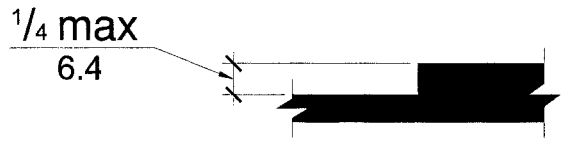

303.3 Beveled. Changes in level between 1/4 inch (6.4 mm) high minimum and 1/2 inch (13 mm) high maximum shall be beveled with a slope not steeper than 1:2.

Figure 303.3

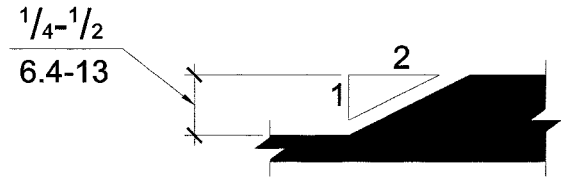

Advisory 303.3

The bevel should be applied to the entire level change.

303.4 Ramps. Changes in level greater than 1/2 inch (13 mm) high shall be ramped, and shall comply with 405 or 406.

304 Wheelchair Turning Space

304.1 General. *Wheelchair* turning *space* shall comply with 304.

304.2 Floor or Ground Surface. Floor or ground surfaces of a turning *space* shall comply with 302. Changes in level are not permitted.

EXCEPTION: Slopes not steeper than 1:48 shall be permitted.

304.3 Size. *Wheelchair* turning *space* shall comply with 304.3.1 or 304.3.2.

304.3.1 Circular Space. The *wheelchair* turning *space* shall be a *space* of 60 inches (1525 mm) diameter minimum. The *space* shall be permitted to include knee and toe clearance complying with 306.

Figure 304.3.1

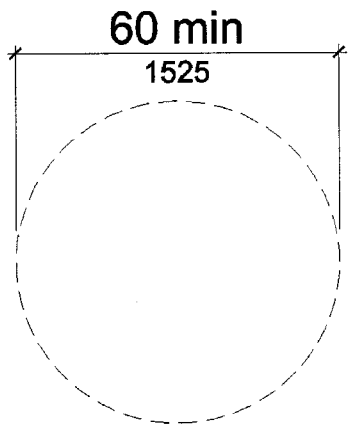

304.3.2 T-Shaped Space. The *wheelchair* turning *space* shall be a T-shaped *space* within a 60 inch (1525 mm) minimum square with arms and base 36 inches (915 mm) wide minimum. Each arm of the T shall be clear of obstructions 12 inches (305 mm) minimum in each direction and the base shall be clear of obstructions 24 inches (610 mm) minimum. Such *space* shall be permitted to include knee and toe clearance complying with 306 only at the end of either the base or one arm.

Figure 304.3.2

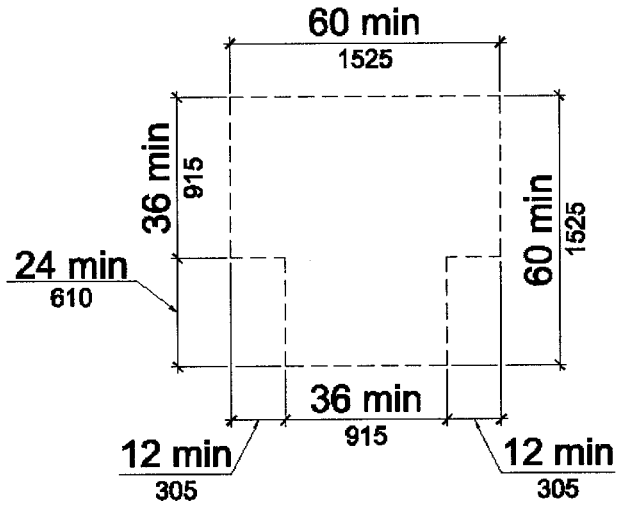

304.4 Doors. Doors shall be permitted to swing into a *wheelchair* turning *space* unless otherwise specified.

305 Clear Floor or Ground Space

305.1 General. Clear floor or ground *space* shall comply with 305.

305.2 Floor or Ground Surfaces. Floor or ground surfaces of a clear floor or ground *space* shall comply with 302. Changes in level are not permitted.

EXCEPTION: Slopes not steeper than 1:48 shall be permitted.

305.3 Size. The clear floor or ground *space* shall be 30 inches (760 mm) minimum by 48 inches (1220 mm) minimum.

Figure 305.3

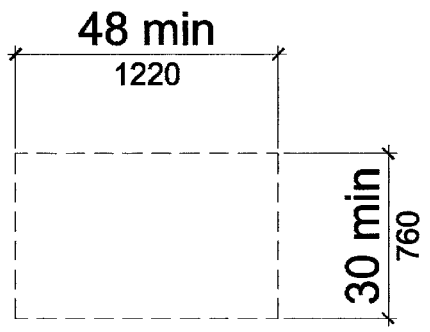

305.4 Knee and Toe Clearance. Unless otherwise specified, clear floor or ground *space* shall be permitted to include knee and toe clearance complying with 306.

305.5 Position. Unless otherwise specified, clear floor or ground *space* shall be positioned for either forward or parallel approach to an *element*.

305.6 Approach. One full unobstructed side of the clear floor or ground *space* shall adjoin or overlap an *accessible route* or adjoin another clear floor or ground *space*.

Figure 305.6

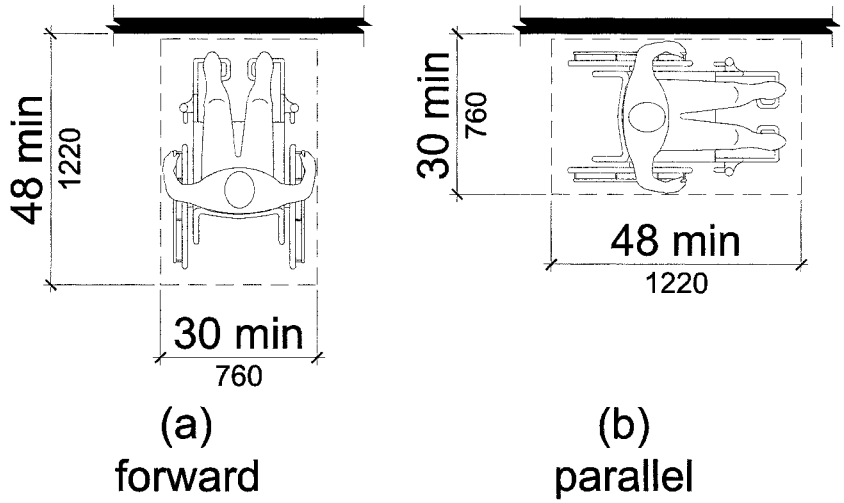

305.7 Maneuvering Clearance. Where a clear floor or ground *space* is located in an alcove or otherwise confined on all or part of three sides, additional maneuvering clearance complying with 305 shall be provided in accordance with 305.7.1 and 305.7.2.

305.7.1 Forward Approach. Where the depth of the alcove or other confined area exceeds 24 inches (610 mm), the width of the clear floor *space* shall be 36 inches (915 mm) minimum.

Figure 305.7.1

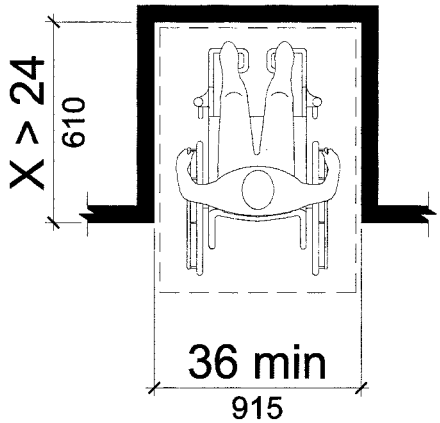

305.7.2 Parallel Approach. Where the depth of the alcove or other confined area exceeds 15 inches (380 mm), the length of the clear floor *space* shall be 60 inches (1525 mm) minimum.

Figure 305.7.2

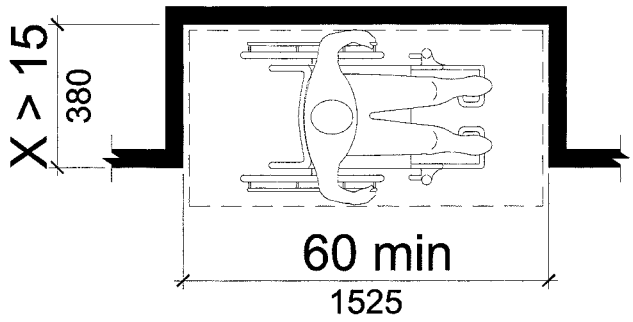

306 Knee and Toe Clearance

306.1 General. Where *space* beneath an object is included as part of clear floor or ground *space* or *wheelchair* turning *space*, the *space* shall comply with 306. Additional *space* shall not be prohibited beneath an object; however, such additional *space* shall not be considered as part of the clear floor or ground *space* or *wheelchair* turning *space*.

Advisory 306.1
Clearances are measured in relation to the usable clear floor space, not necessarily to the vertical support for an element. When determining clearance under an object for required turning or maneuvering space, care should be taken to ensure the space is clear of any obstructions.

306.2 Toe Clearance.

Figure 306.2

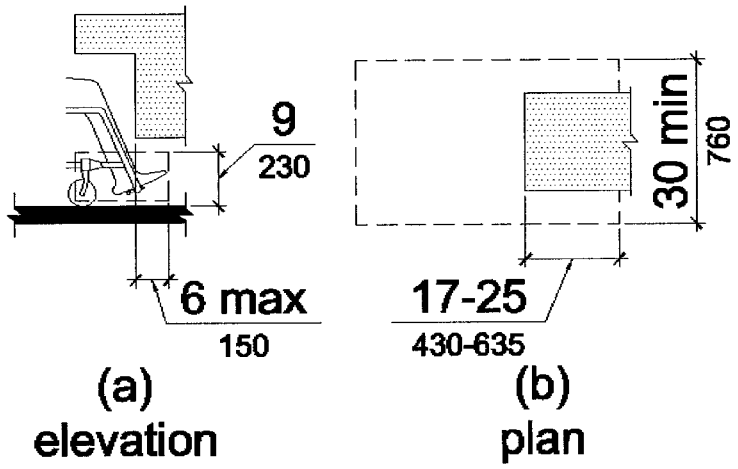

306.2.1 General. *Space* under an object between the floor or ground and 9 inches (230 mm) above the floor or ground shall be considered toe clearance and shall comply with 306.2.

306.2.2 Maximum Depth. Toe clearance shall extend 25 inches (635 mm) maximum under an object.

306.2.3 Minimum Required Depth. Where toe clearance is required at an *element* as part of a clear floor *space*, the toe clearance shall extend 17 inches (430 mm) minimum under the *element*.

306.2.4 Additional Clearance. *Space* extending greater than 6 inches (150 mm) beyond the available knee clearance at 9 inches (230 mm) above the floor or ground shall not be considered toe clearance.

306.2.5 Width. Toe clearance shall be 30 inches (760 mm) minimum in width.

306.3 Knee Clearance.

Figure 306.3

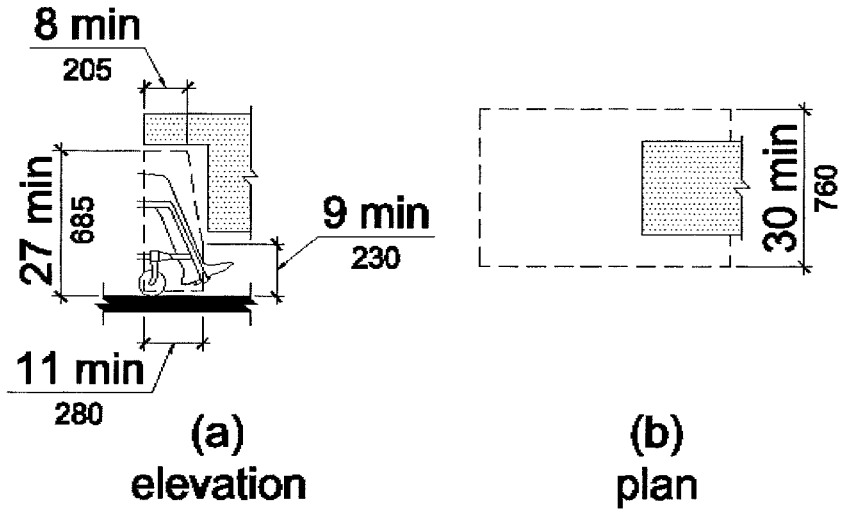

306.3.1 General. *Space* under an object between 9 inches (230 mm) and 27 inches (685 mm) above the floor or ground shall be considered knee clearance and shall comply with 306.3.

306.3.2 Maximum Depth. Knee clearance shall extend 25 inches (635 mm) maximum under an object at 9 inches (230 mm) above the floor or ground.

306.3.3 Minimum Required Depth. Where knee clearance is required under an *element* as part of a clear floor *space*, the knee clearance shall be 11 inches (280 mm) minimum in depth at 9 inches (230 mm) above the floor or ground, and 8 inches (205 mm) minimum in depth at 27 inches (685 mm) above the floor or ground.

306.3.4 Clearance Reduction. Between 9 inches (230 mm) and 27 inches (685 mm) above the floor or ground, the knee clearance shall be permitted to reduce at a rate of 1 inch (25 mm) for each 6 inches (150 mm) in height.

306.3.5 Width. Knee clearance shall be 30 inches (760 mm) minimum in width.

307 Protruding Objects

307.1 General. Protruding objects shall comply with 307.

307.2 Protrusion Limits. Objects with leading edges more than 27 inches (685 mm) and not more than 80 inches (2030 mm) above the floor or ground shall protrude 4 inches (100 mm) maximum horizontally into the *circulation path.*

Figure 307.2

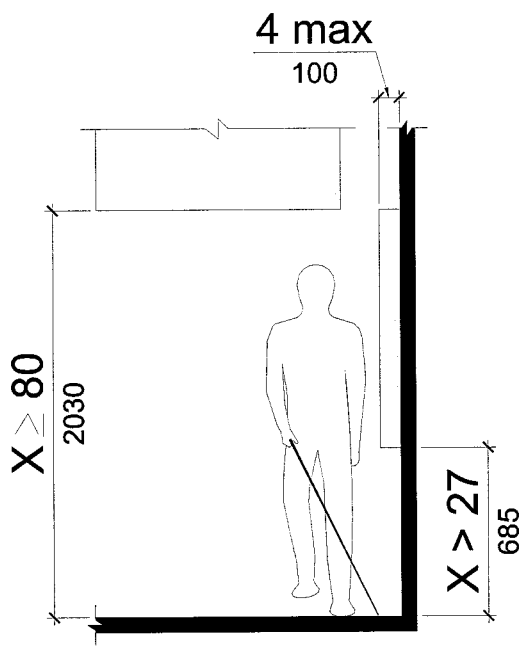

Advisory 307.2

The two principle cane techniques are the touch technique, where the cane is arced from side-to-side and touches points outside both shoulders, and the diagonal technique, where the cane is held in a stationary position diagonally across the body with the tip just above the ground at a point outside one shoulder and the handle extended to a point outside the other shoulder. When one of these techniques is used and the element is in the detectable range, it gives a person sufficient time to detect the element with the cane before there is body contact.

EXCEPTION: Handrails serving stairs and *ramps* shall protrude 4-1/2 inches (115 mm) maximum from the wall.

307.3 Post-mounted Objects. Free-standing objects mounted on posts or pylons shall overhang 12 inches (305 mm) maximum when located 27 inches (685 mm) minimum and 80 inches (2030 mm) maximum above the floor or ground. Where a *sign* or other obstruction is mounted between posts or pylons and the clear distance between the posts or pylons is greater than 12 inches (305 mm), the

lowest edge of such *sign* or obstruction shall be 27 inches (685 mm) maximum or 80 inches (2030 mm) minimum above the floor or ground.

Figure 307.3

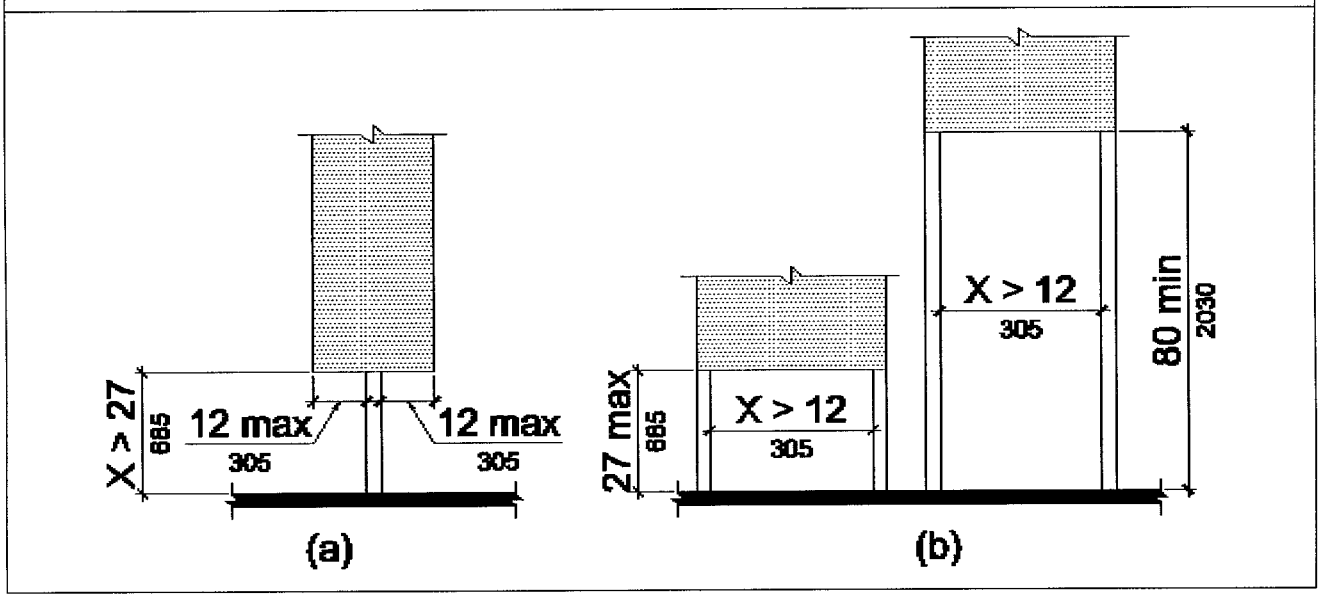

EXCEPTION: This requirement shall not apply to sloping portions of handrails serving stairs and *ramps*.

307.4 Reduced Vertical Clearance. Guardrails or other barriers shall be provided where the vertical clearance is less than 80 inches (2030 mm) high. The leading edge of such guardrail or barrier shall be located 27 inches (685 mm) maximum above the floor or ground.

Figure 307.4

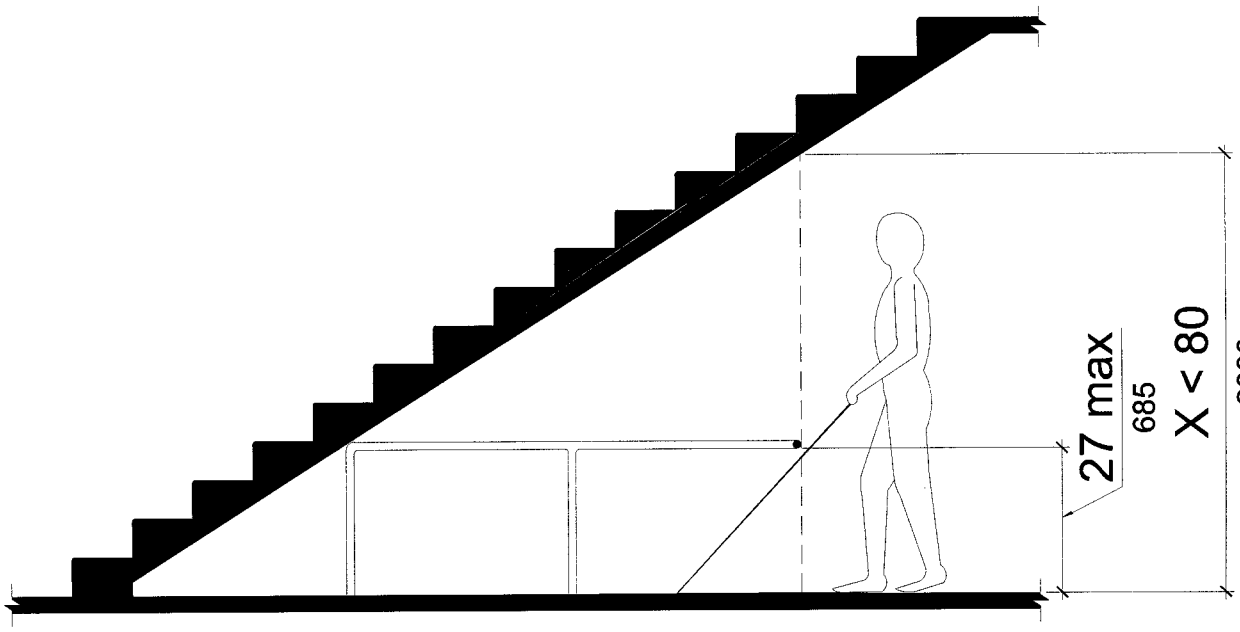

EXCEPTION: Door closers and door stops shall be permitted to be 78 inches (1980 mm) minimum above the floor or ground.

307.5 Required Clear Width. Protruding objects shall not reduce the clear width required for *accessible routes*.

308 Reach Ranges

308.1 General. Reach ranges shall comply with 308.

Advisory 308.1

The following table provides guidance on reach ranges for children according to age where *building elements* such as coat hooks, lockers, or controls and operating mechanisms are designed for use primarily by children. These dimensions apply to either forward or side reaches. *Accessible elements*, controls, and operating mechanisms designed for adult use or children over age 12 can be located outside these ranges but must be within the adult reach ranges required by 308.

Children's Reach Ranges			
Forward or Side Reach	**Ages 3 and 4**	**Ages 5 through 8**	**Ages 9 through 12**
High (maximum)	36 in (915 mm)	40 in (1015 mm)	44 in (1120 mm)
Low (minimum)	20 in (510 mm)	18 in (455 mm)	16 in (405 mm)

308.2 Forward Reach.

308.2.1 Unobstructed. Where a clear floor or ground *space* allows only a forward approach to an object and is unobstructed, the high forward reach shall be 48 inches (1220 mm) maximum and the low forward reach shall be 15 inches (380 mm) minimum above the floor or ground.

Figure 308.2.1

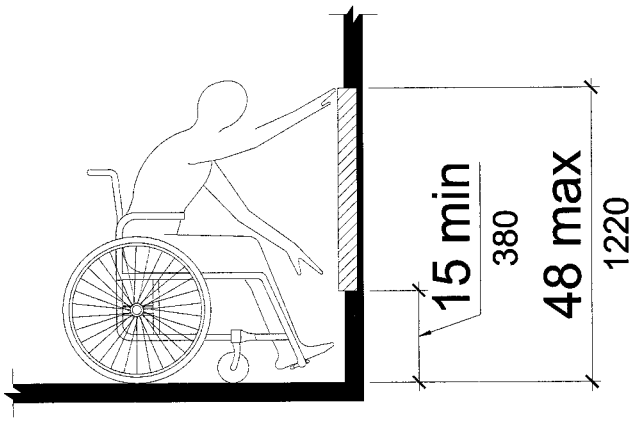

308.2.2 Obstructed High Reach. Where a clear floor or ground *space* allows only a forward approach to an object and the high forward reach is over an obstruction, the clear floor *space* shall extend beneath the object for a distance not less than the required reach depth over the obstruction. The high forward reach shall be 48 inches (1220 mm) maximum where the reach depth is 20 inches

(510 mm) maximum. Where the reach depth exceeds 20 inches (510 mm), the high forward reach shall be 44 inches (1120 mm) maximum and the reach depth shall be 25 inches (635 mm) maximum.

Figure 308.2.2

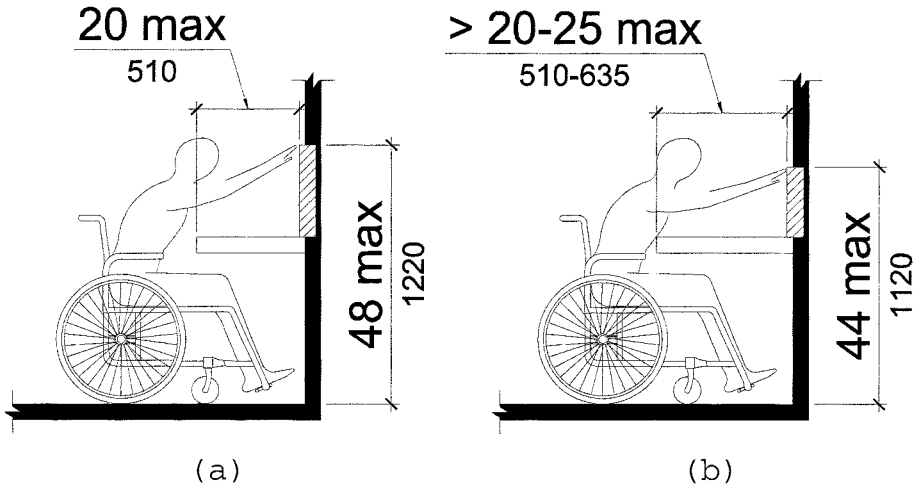

308.3 Side Reach.

308.3.1 Unobstructed. Where a clear floor or ground *space* allows a parallel approach to an element and the side reach is unobstructed, the high side reach shall be 54 inches (1370 mm) maximum and the low side reach shall be 15 inches (380 mm) minimum above the floor or ground.

Figure 308.3.1

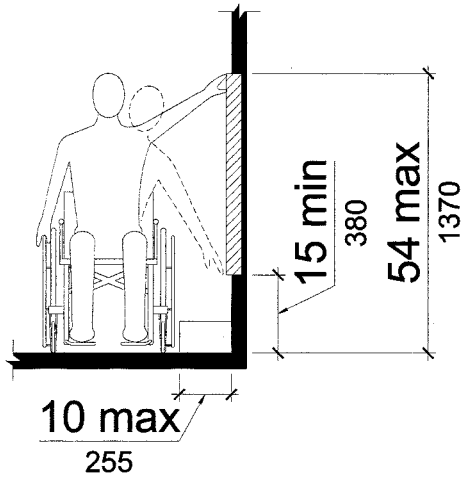

EXCEPTION: An obstruction shall be permitted between the clear floor or ground *space* and the element where the depth of the obstruction is 10 inches (255 mm) maximum.

308.3.2 Obstructed High Reach. Where a clear floor or ground *space* allows a parallel approach to an object and the high side reach is over an obstruction, the height of the obstruction shall be 34 inches (865 mm) maximum and the depth of the obstruction shall be 24 inches (610 mm) maximum. The high side reach shall be 54 inches (1370 mm) maximum for a reach depth of 10 inches (255 mm) maximum. Where the reach depth exceeds 10 inches (255 mm), the high side reach shall be 46 inches (1170 mm) maximum for a reach depth of 24 inches (610 mm) maximum.

Figure 308.3.2

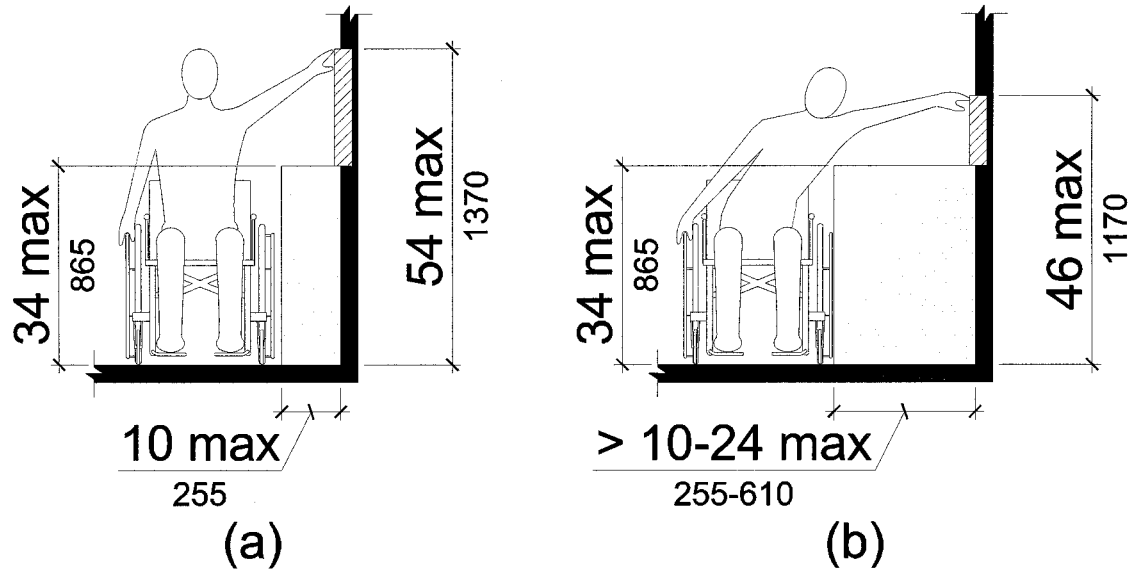

309 Operable Parts

309.1 General. *Operable parts* shall comply with 309.

309.2 Clear Floor Space. A clear floor or ground *space* complying with 305 shall be provided.

309.3 Height. *Operable parts* shall be placed within one or more of the reach ranges specified in 308.

EXCEPTION: This requirement does not apply where the use of special equipment dictates otherwise or where electrical and communications systems receptacles are not normally intended for use by building or *facility* occupants.

309.4 Operation. *Operable parts* shall be operable with one hand and shall not require tight grasping, pinching, or twisting of the wrist. The force required to activate *operable parts* shall be 5 lb (22.2 N) maximum.

CHAPTER 4: ACCESSIBLE ROUTES

401 General

401.1 Scope. *Accessible routes* and *accessible means of egress* required by Chapter 2 shall comply with the applicable provisions of this chapter.

402 Accessible Routes

402.1 General. *Accessible routes* shall comply with 402.

402.2 Components. *Accessible routes* shall consist of one or more of the following components: walking surfaces with a slope not steeper than 1:20, doorways, *ramps*, elevators and platform (*wheelchair*) lifts. All components of an *accessible route* shall comply with the applicable portions of this chapter.

403 Walking Surfaces

403.1 General. Walking surfaces that are a part of an *accessible route* shall comply with 403.

403.2 Floor or Ground Surface. Floor or ground surfaces shall comply with 302.

403.3 Slope. The *running slope* of walking surfaces shall be not steeper than 1:20. The *cross slope* of walking surfaces shall not be steeper than 1:48.

403.4 Changes in Level. Changes in level shall comply with 303.

403.5 Clear Width. The clear width of walking surfaces shall be 36 inches (915 mm) minimum.

Figure 403.5

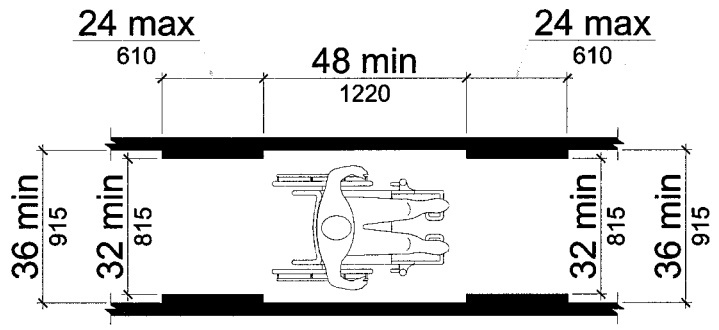

EXCEPTION: The clear width shall be permitted to be reduced to 32 inches (815 mm) minimum for a length of 24 inches (610 mm) maximum, provided that reduced width segments are separated by segments that are 48 inches (1220 mm) minimum in length and 36 inches (915 mm) minimum in width.

403.5.1 Clear Width at Turn. Where the *accessible route* makes a 180 degree turn around an object which is less than 48 inches (1220 mm) wide, clear width shall be 42 inches (1065 mm) minimum approaching the turn, 48 inches (1220 mm) minimum at the turn and 42 inches (1065 mm) leaving the turn.

Figure 403.5.1

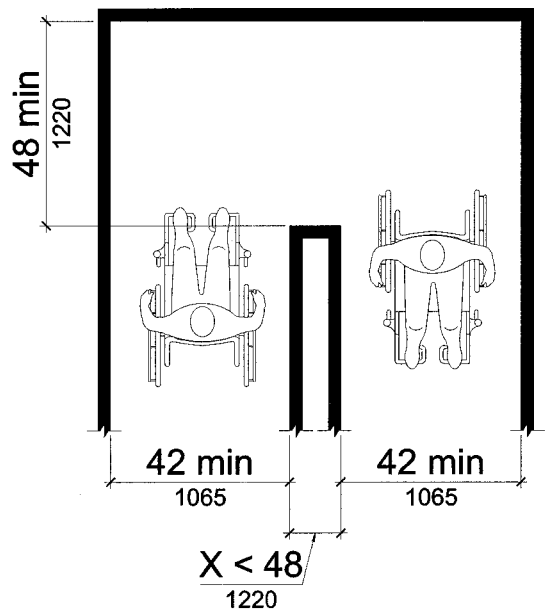

EXCEPTION: This requirement shall not apply where the clear width at the turn is 60 inches (1525 mm) minimum.

403.5.2 Passing Spaces. An *accessible route* with a clear width less than 60 inches (1525 mm) shall provide passing *spaces* at intervals of 200 feet (61 m) maximum. Passing *spaces* shall be either a 60 inch (1525 mm) minimum by 60 inch (1525 mm) minimum *space*, or an intersection of two walking surfaces which provide a T-shaped *space* complying with 304 provided that the stem and arms of the T-shaped *space* extend 48 inches (1220 mm) minimum beyond the intersection.

403.5.3 Protruding Objects. Protruding objects shall comply with 307. Protruding objects shall not reduce the required clear width.

Advisory 403.5.3
The height of the clear or unobstructed *space* is considered from the floor or ground to 80 inches (2030 mm) above the floor or ground, unless specified otherwise.

404 Doors and Doorways

404.1 General. Doors and doorways that are part of an *accessible route* shall comply with 404.

404.2 Manual Doors and Doorways. Manual doors and doorways and manual gates, including ticket gates, shall comply with 404.2.

EXCEPTION: Doors, doorways, and gates designed to be operated only by security personnel shall not be required to comply with 404.2.7, 404.2.8, and 404.2.9.

404.2.1 Revolving Doors and Turnstiles. Manual revolving doors and revolving turnstiles shall not be part of an *accessible route*.

404.2.2 Double-Leaf Doors. At least one of the active leaves of doorways with two independently operated leaves shall comply with 404.2.3 and 404.2.4.

Figure 402.2.2

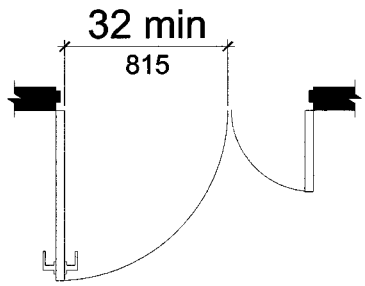

404.2.3 Clear Width. Doorways shall have a clear opening of 32 inches (815 mm) minimum. Clear openings of doorways with swinging doors shall be measured between the face of the door and the stop, with the door open 90 degrees. Openings more than 24 inches (610 mm) in depth shall provide a clear opening of 36 inches (915 mm) minimum. There shall be no projections into the required clear opening width lower than 34 inches (865 mm) above the floor or ground. Projections into the

clear opening width between 34 inches (865 mm) and 80 inches (2030 mm) above the floor or ground shall not exceed 4 inches (100 mm).

Figure 404.2.3

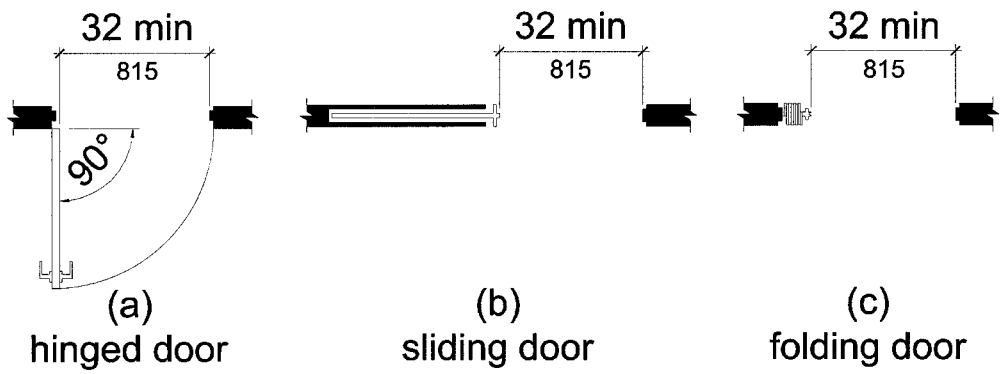

EXCEPTION: In *alterations*, a projection of 5/8 inch (16 mm) maximum into the required clear width shall be permitted for the latch side stop.

404.2.4 Maneuvering Clearances.

404.2.4.1 Swinging Doors. Approaches to swinging doors shall have maneuvering clearances complying with Table 404.2.4.1.

Table 404.2.4.1 Maneuvering Clearances at Manual Swinging Doors

Type of Use		Minimum Maneuvering Clearance[1]	
Approach Direction	**Door Side**	**Perpendicular to Doorway**	**Parallel to Doorway (beyond latch side unless noted)**
From front	Pull	60 inches (1525 mm)	18 inches (455 mm)
From front	Push	48 inches (1220 mm)	0 inches (0 mm)[2]
From hinge side	Pull	60 inches (1525 mm)	36 inches (915 mm)
From hinge side	Pull	54 inches (1370 mm)	42 inches (1065 mm)
From hinge side	Push	42 inches (1065 mm)[3]	22 inches (560 mm)[4]
From latch side	Pull	48 inches (1220 mm)[5]	24 inches (610 mm)
From latch side	Push	42 inches (1065 mm)[6]	24 inches (610 mm)

1. Maneuvering clearances shall include the full width of the doorway.
2. Add 12 inches (305 mm) if closer and latch are provided.
3. Add 6 inches (150 mm) if closer and latch are provided.
4. beyond hinge side
5. Add 6 inches (150 mm) if closer and latch are provided.
6. Add 6 inches (150 mm) if closer and latch are provided.

EXCEPTION: Doors to hospital patient sleeping rooms shall not be required to provide the clearance beyond the latch side of the door provided the door is 44 inches (1120 mm) wide minimum.

Figure 404.2.4.1

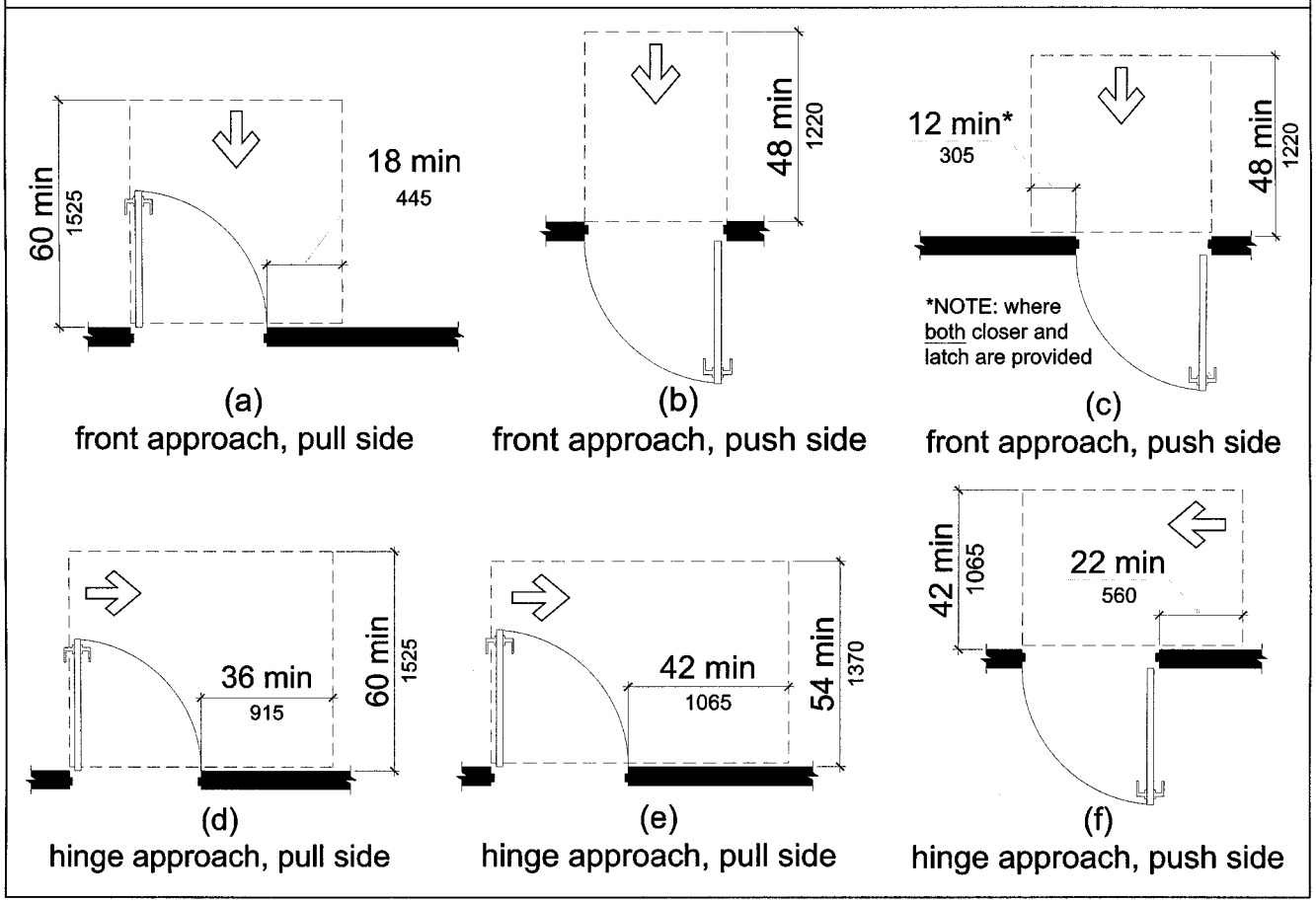

Figure 404.2.4.1

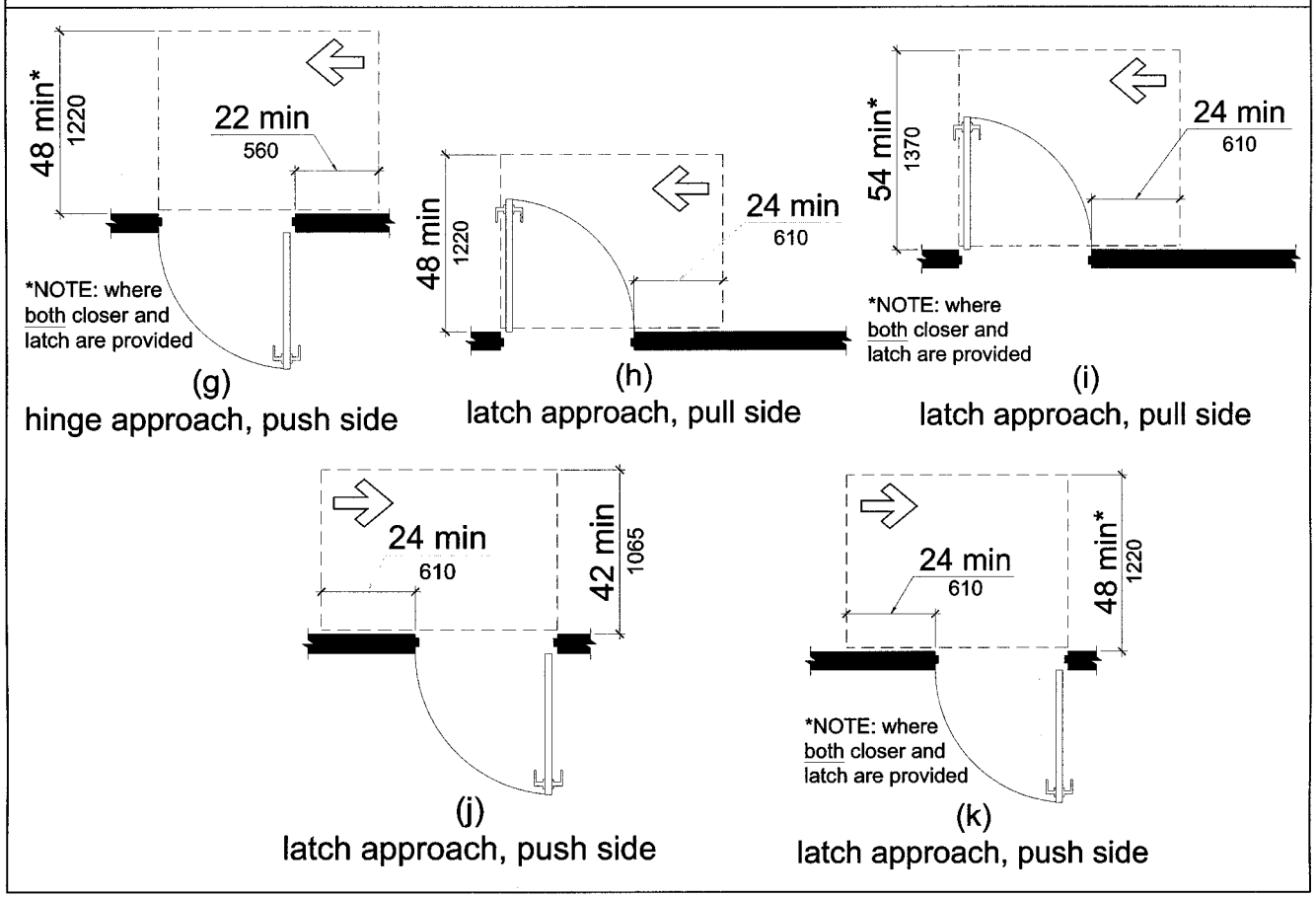

404.2.4.2 Doorways without Doors, Sliding Doors, and Folding Doors. Doorways less than 36 inches (915 mm) wide without doors, sliding doors, or folding doors shall have maneuvering clearances complying with Table 404.2.4.2.

Table 404.2.4.2 Maneuvering Clearances at Doorways without Doors, Manual Sliding Doors, and Manual Folding Doors

	Minimum Maneuvering Clearance[1]	
Approach Direction	**Perpendicular to Doorway**	**Parallel to Doorway (beyond stop/latch side unless noted)**
From Front	48 inches (1220 mm)	0 inches (0 mm)
From side[2]	42 inches (1065 mm)	0 inches (0 mm)

Table 404.2.4.2 Maneuvering Clearances at Doorways without Doors, Manual Sliding Doors, and Manual Folding Doors

	Minimum Maneuvering Clearance[1]	
Approach Direction	**Perpendicular to Doorway**	**Parallel to Doorway (beyond stop/latch side unless noted)**
From pocket/hinge side	42 inches (1065 mm)	22 inches (560 mm)[3]
From stop/latch side	42 inches (1065 mm)	24 inches (610 mm)

1. Maneuvering clearance shall include the full width of the doorway.
2. doorway with no door only
3. beyond pocket/hinge side

EXCEPTION: Doors to hospital patient sleeping rooms are exempt from the clearance beyond the stop/latch side of the door provided the door is 44 inches (1120 mm) wide minimum.

Figure 404.2.4.2

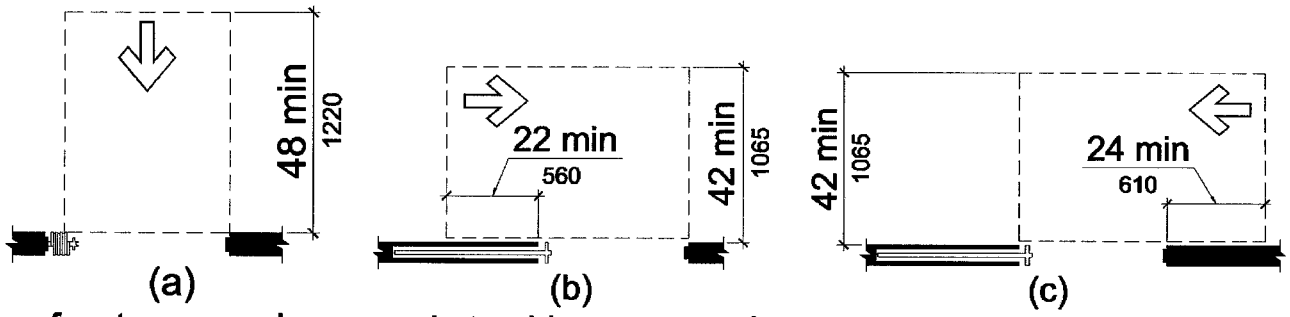

(a) front approach (b) pocket or hinge approach (c) stop or latch approach

404.2.4.3 Recessed Doors. Recessed doors where the plane of the doorway is offset more than 8 inches (205 mm) from any obstruction within 18 inches (455 mm) measured laterally on the latch side of the door shall provide maneuvering clearances for front approach.

Figure 404.2.4.3

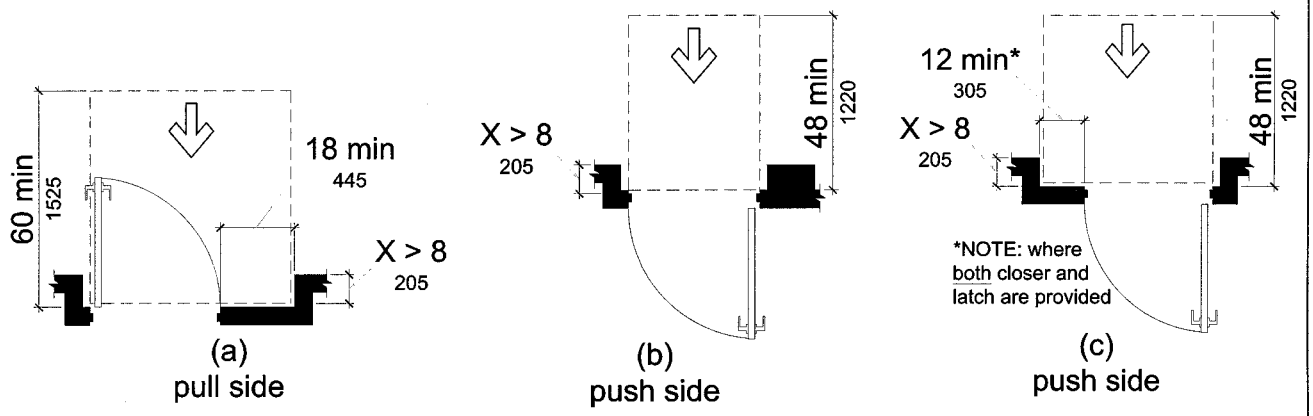

Advisory 404.2.4.3

A door can be recessed due to wall thickness, or the placement of casework, and other fixed *elements*. This provision should be applied wherever doors are recessed.

404.2.4.4 Floor or Ground Surface. Floor or ground surface within required maneuvering clearances shall have a slope of 1:48 maximum and shall comply with 302. Changes in level, except at thresholds complying with 404.2.5, are not permitted.

404.2.5 Thresholds. Thresholds if provided at doorways shall be 1/2 inch (13 mm) maximum in height. Raised thresholds and changes in level at doorways shall comply with 302 and 303.

EXCEPTION: This requirement shall not apply to existing or *altered* thresholds 3/4 inch (19 mm) high maximum that have a beveled edge on each side.

404.2.6 Two Doors in Series. The distance between two hinged or pivoted doors in series shall be 48 inches (1220 mm) minimum plus the width of any door swinging into the *space*. Doors in series shall swing either in the same direction or away from the *space* between the doors.

Figure 404.2.6

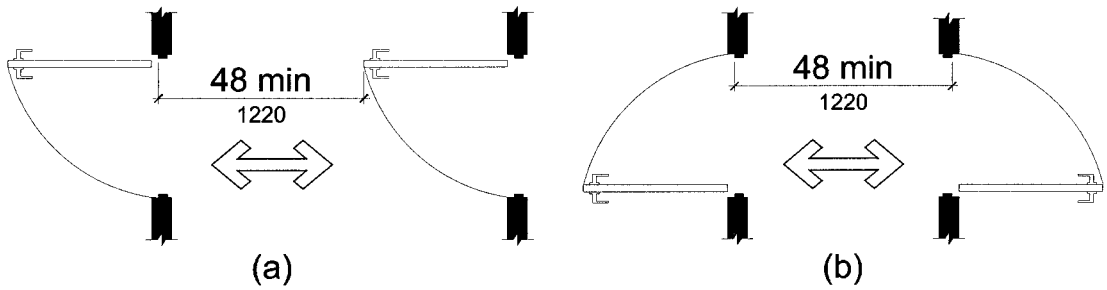

404.2.7 Door Hardware. Handles, pulls, latches, locks, and other *operable parts* on *accessible* doors shall comply with 309.4. Such hardware shall be 34 inches (865 mm) minimum and 48 inches (1220 mm) maximum above the floor or ground. When sliding doors are in the fully open position, operating hardware shall be exposed and usable from both sides.

Figure 404.2.7

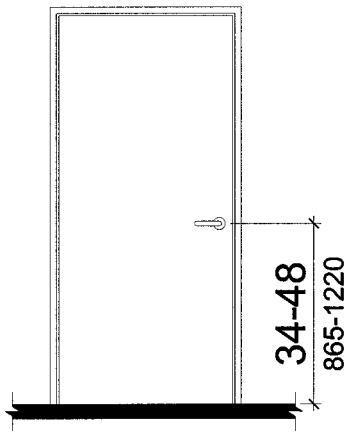

Advisory 404.2.7

Door hardware that can be operated with a closed fist or a loose grip accommodates the greatest range of users. Hardware that requires simultaneous hand and finger movements require greater dexterity and coordination and is not recommended.

EXCEPTION: Existing locks shall be permitted in any location at existing glazed doors without stiles, existing overhead rolling doors or grilles, and similar existing doors or grilles that are designed with locks that are activated only at the top or bottom rail.

404.2.8 Closing Speed.

404.2.8.1 Door Closers. Door closers shall be adjusted so that from an open position of 90 degrees, the time required to move the door to a position of 12 degrees from the latch is 5 seconds minimum.

404.2.8.2 Spring Hinges. Door spring hinges shall be adjusted so that from the open position of 70 degrees, the door shall move to the closed position in 1.5 seconds minimum.

404.2.9 Door Opening Force. Fire doors shall have a minimum opening force allowable by the appropriate *administrative authority.* The required force for pushing or pulling open a door other than fire doors shall be as follows:

1. Interior hinged doors: 5 lb (22.2 N) maximum.
2. Sliding or folding doors: 5 lb (22.2 N) maximum.

These forces do not apply to the force required to retract latch bolts or disengage other devices that hold the door in a closed position.

Advisory 404.2.9
The maximum force pertains to the continuous application of force necessary to fully open a door, not the initial force needed to overcome the inertia of the door. It does not apply to the force required to retract bolts or to disengage other devices used to keep the door in a closed position.

404.2.10 Door Surface. The bottom 10 inches (255 mm) of all swinging doors shall have a smooth surface on the push side and extending the full width of the door. Parts creating horizontal or vertical

joints in such surface shall be within 1/16 inch (1.6 mm) of the same plane as the other. Cavities created by added kick plates shall be capped.

Figure 404.2.10

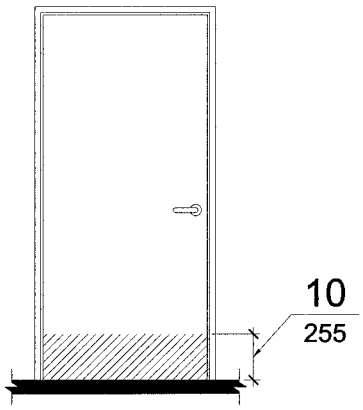

EXCEPTIONS: 1. This requirement shall not apply to sliding doors.
2. This requirement shall not apply to tempered glass doors without stiles and having a bottom rail or shoe with the top leading edge tapered at 60 degrees minimum from the horizontal.
3. This requirement shall not apply to doors that do not extend to within 10 inches (255 mm) of the floor or ground.

404.2.11 Vision Lites. Doors, and sidelites adjacent to doors, containing one or more glazing panels that permit viewing through the panels shall have the bottom of at least one glazed panel located 43 inches (1090 mm) maximum above the floor.

Figure 404.2.11

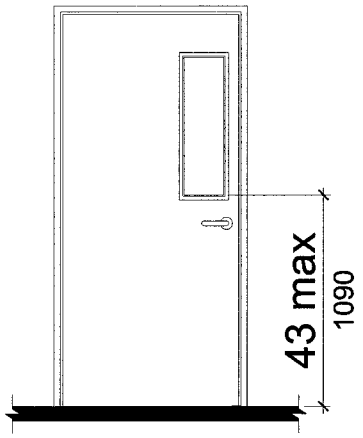

EXCEPTION: Vision lites with the lowest part more than 66 inches (1675 mm) from the floor or ground are not required to comply with this section.

404.3 Automatic Doors. *Automatic doors* and automatic gates shall comply with 404.3. Full-powered *automatic doors* shall comply with ANSI/BHMA A156.10. Low-energy and *power-assisted doors* shall comply with ANSI/BHMA A156.19. *Automatic doors* shall be permitted on an *accessible route*.

EXCEPTION: The requirements of 404.3.2 and 404.3.4 through 404.3.7 shall not apply to doors, doorways, and gates designed to be operated only by security personnel.

404.3.1 Clear Width. Doorways shall have a clear opening of 32 inches (815 mm) minimum in power-on and power- off mode. The minimum clear width for *automatic door* systems shall be based on the clear opening provided by all leafs in the open position.

404.3.2 Maneuvering Clearance. Clearances at *power-assisted doors* shall comply with 404.2.4.

404.3.3 Thresholds. Thresholds and changes in level at doorways shall comply with 404.2.5.

404.3.4 Two Doors in Series. Doors in series shall comply with 404.2.6.

404.3.5 Operable Parts. Manually operated control switches shall comply with 309 and shall be located outside the door swing.

404.3.6 Signs. Labels and warnings for *automatic doors* shall comply with 703.4.

404.3.7 Break Out Opening. When an *automatic door* is operated in emergency mode, the clear break out opening for a swinging or sliding *automatic door* shall be 32 inches (815 mm) minimum.

405 Ramps

405.1 General. *Ramps* along *accessible route*s shall comply with 405.

405.2 Slope. *Ramp* runs shall have a *running slope* not steeper than 1:12.

Table 405.2 Maximum Ramp Slope and Rise for Existing Sites, Buildings and Facilities

Slope[1]	Maximum Rise
Steeper than 1:10 but not steeper than 1:8	3 inches (75 mm)
Steeper than 1:12 but not steeper than 1:10	6 inches (150 mm)

1. A slope steeper than 1:8 is prohibited.

EXCEPTIONS: 1. *Ramps* in or on existing *buildings* or *facilities* shall be permitted to have slopes steeper than 1:12 complying with Table 405.2 where such slopes are necessitated by *space* limitations.

2. In *alterations* to *qualified historic buildings and facilities* where exceptions for *alterations* are permitted by Chapter 2, the slope of a *ramp* run of 24 inches (610 mm) maximum shall not be steeper than 1:6.

405.3 Cross Slope. *Cross slope* of *ramp* runs shall not be steeper than 1:48.

Advisory 405.3
Cross slope is the slope of the surface perpendicular to the direction of travel. It is measured the same way as slope is measured: the rise over the run.

405.4 Floor or Ground Surfaces. Floor or ground surfaces of *ramp* runs shall comply with 302. Changes in level other than the *running slope* and *cross slope* are not permitted on *ramp* runs.

405.5 Clear Width. The clear width of a *ramp* run and the clear width between handrails, if provided, shall be 36 inches (915 mm) minimum.

405.6 Rise. The rise for any *ramp* run shall be 30 inches (760 mm) maximum.

405.7 Landings. *Ramps* shall have landings at bottom and top of each *ramp* run. Landings shall comply with 405.7.

Figure 405.7

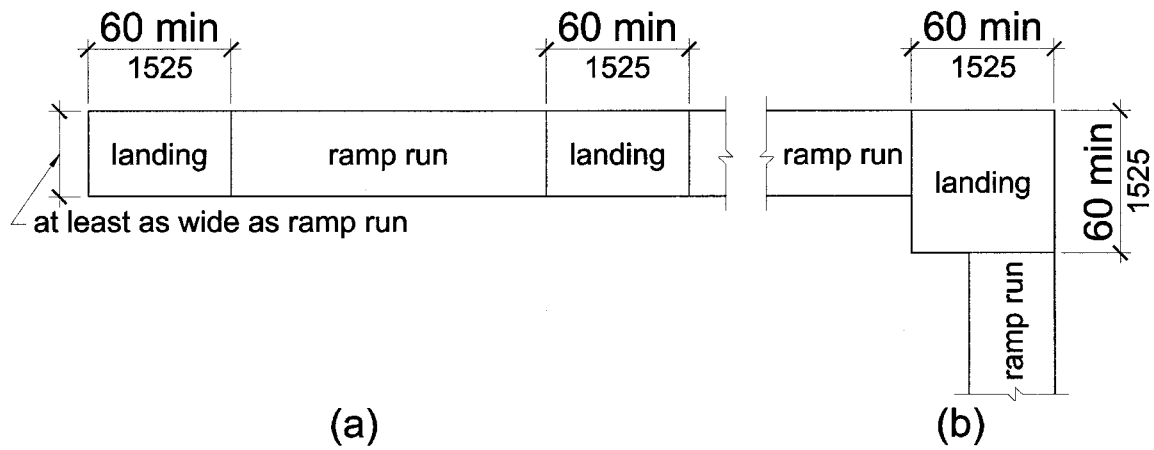

Advisory 405.7
Ramps that do not have level landings at changes in direction can create a compound slope that will not meet the requirements of this document. A level landing at doors and doorways is needed for maneuvering at the door while simultaneously operating hardware.

405.7.1 Slope. Landings shall comply with 302. Changes in level are not permitted.

EXCEPTION: Slopes not steeper than 1:48 shall be permitted.

405.7.2 Width. The landing shall be at least as wide as the widest *ramp* run leading to the landing.

405.7.3 Length. The landing length shall be 60 inches (1525 mm) minimum.

405.7.4 Change in Direction. *Ramps* that change direction between runs at landings shall have a 60 inch (1525 mm) minimum by 60 inch (1525 mm) minimum landing.

405.7.5 Doorways. Where doorways are located adjacent to a *ramp* landing, maneuvering clearances required by 404.2.4 and 404.3.2 shall be permitted to overlap the required landing area.

405.8 Handrails. *Ramp* runs with a rise greater than 6 inches (150 mm) shall have handrails complying with 505.

405.9 Edge Protection. Edge protection complying with 405.9.1 or 405.9.2 shall be provided on each side of *ramp* runs and at each side of *ramp* landings.

Figure 405.9

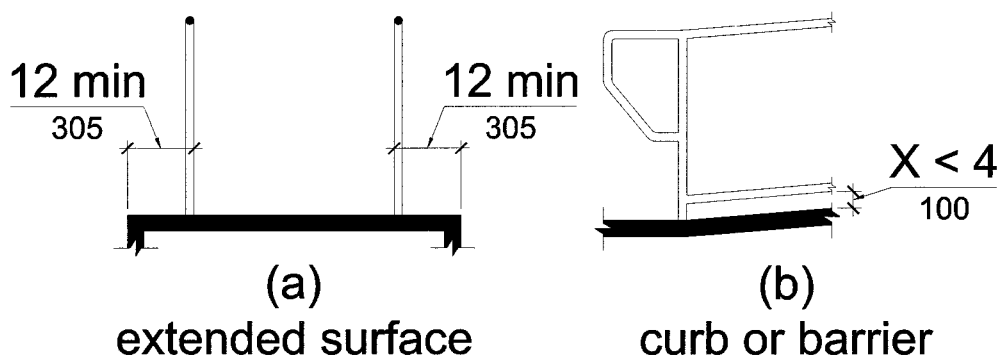

EXCEPTIONS: **1.** Edge protection is not required on *ramps* that are not required to have handrails and have sides complying with 406.3.
2. Edge protection is not required on the sides of *ramp* landings serving an adjoining *ramp* run or stairway.
3. Edge protection is not required on the sides of *ramp* landings having a vertical drop-off of 1/2 inch (13 mm) maximum within 10 inches (255 mm) horizontally of the minimum landing area.

405.9.1 Extended Floor or Ground Surface. The floor or ground surface of the *ramp* run or landing shall extend 12 inches (305 mm) minimum beyond the inside face of a handrail complying with 505.

Advisory 405.9.1
The extended surface is provided to prevent *wheelchair* casters and crutch tips from slipping off the *ramp* surface.

405.9.2 Curb or Barrier. A curb or barrier shall be provided that prevents the passage of a 4 inch (100 mm) diameter sphere, where any portion of the sphere is within 4 inches (100 mm) of the floor or ground surface.

405.10 Wet Conditions. Landings subject to wet conditions shall be designed to prevent the accumulation of water.

406 Curb Ramps

406.1 General. *Curb ramps* on *accessible routes* shall comply with 406 and with 405.2, 405.4, 405.5, and 405.10.

406.2 Counter Slope. Counter slopes of adjoining gutters and road surfaces immediately adjacent to the *curb ramp* shall not be steeper than 1:20. The adjacent surfaces at transitions at *curb ramps* to *walks*, gutters, and streets shall be at the same level.

Figure 406.2

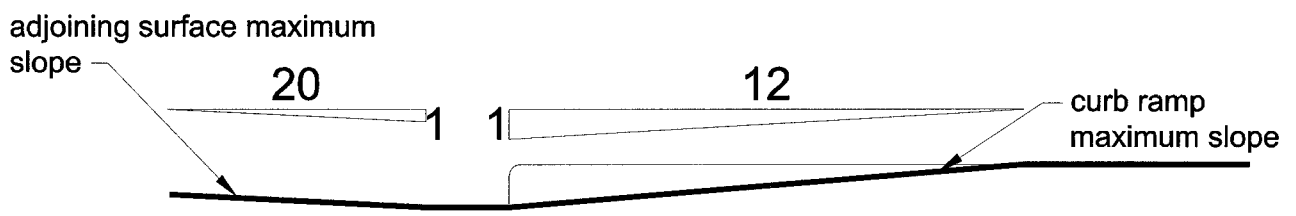

406.3 Sides of Curb Ramps. *Curb ramps* located where pedestrians must walk across the *ramp* shall have flared sides. Slope of the flares shall not be steeper than 1:10. Where the width of the walking surface at the top of the *ramp* and parallel to the run of the *ramp* is less than 48 inches (1220 mm) wide,

the flared sides shall have a slope not steeper than 1:12. *Curb ramps* with returned curbs shall be permitted where pedestrians would not normally walk across the *ramp*.

Figure 406.3

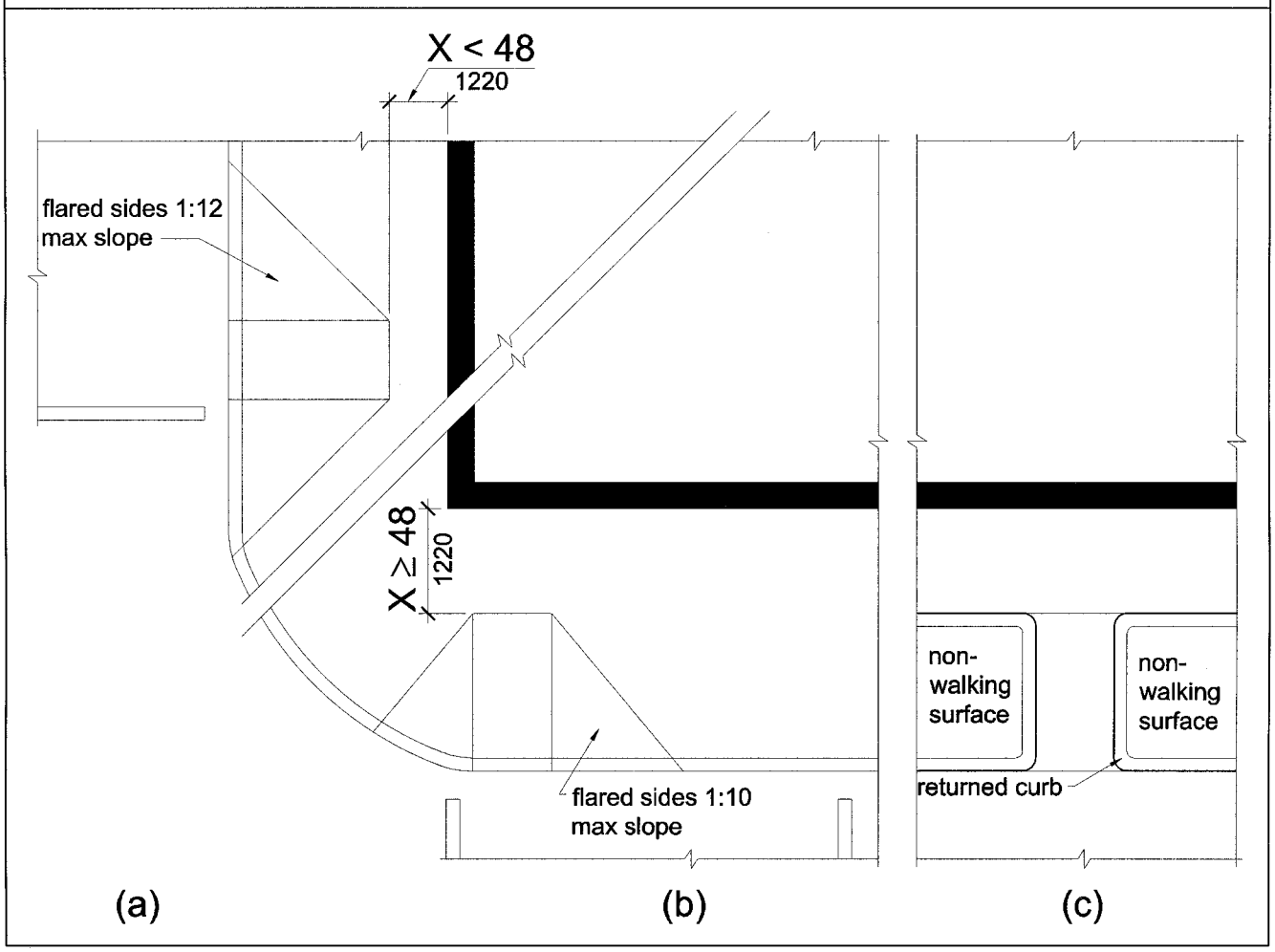

406.4 Handrails. Handrails are not required on *curb ramps*.

406.5 Location at Marked Crossings. *Curb ramps* at *marked crossings* shall be wholly contained within the markings, excluding any flared sides.

406.6 Diagonal Curb Ramps. Diagonal or corner type *curb ramps* with returned curbs or other well-defined edges shall have the edges parallel to the direction of pedestrian flow. The bottom of diagonal *curb ramps* shall have 48 inches (1220 mm) minimum of clear *space*. Diagonal *curb ramps* provided at *marked crossings* shall provide the 48 inches (1220 mm) minimum clear *space* within the

markings. Diagonal *curb ramps* with flared sides shall have a segment of straight curb 24 inches (610 mm) long minimum located on each side of the *curb ramp* and within the *marked crossing*.

Figure 406.6

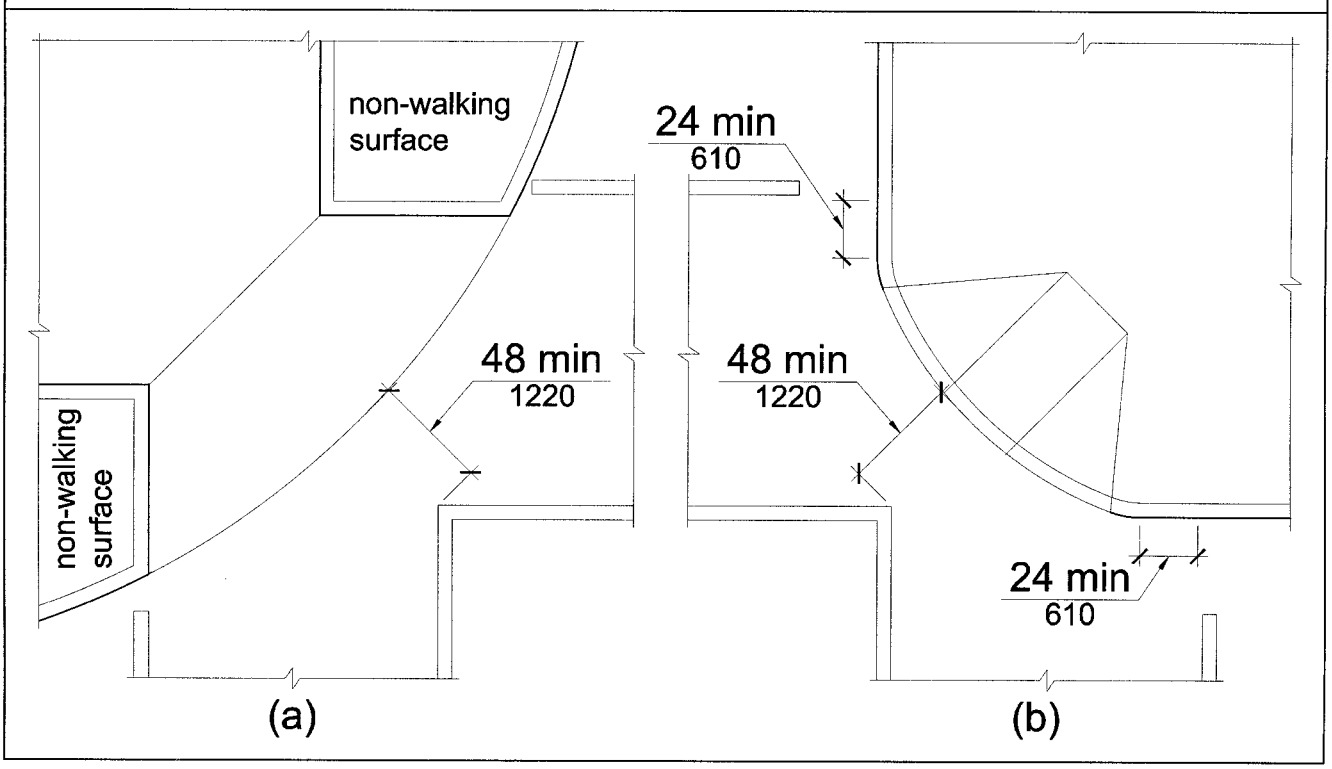

406.7 Islands. Raised islands in crossings shall be cut through level with the street or have *curb ramps* at both sides. Each *curb ramp* shall have a level area 48 inches (1220 mm) long minimum by 36 inches (915 mm) wide minimum at the top of the *curb ramp* in the part of the island intersected by the crossings. Each 48 inch (1220 mm) by 36 inch (915 mm) area shall be oriented so that the 48 inch (1220 mm)

length is in the direction of the *running slope* of the *curb ramp* it serves. The 48 inch (1220 mm) by 36 inch (915 mm) areas and the *accessible route* shall be permitted to overlap.

Figure 406.7

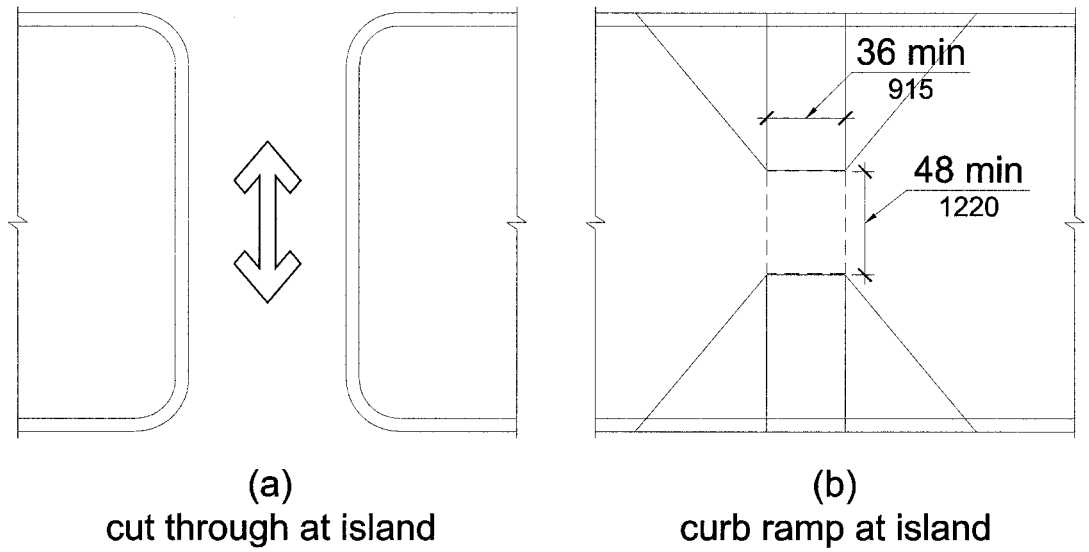

406.8 Location. *Curb ramps* shall be located so that they do not project into vehicular traffic lanes, parking *spaces*, or parking access aisles.

407 Elevators

407.1 General. New elevators required to be *accessible* shall comply with 407.2. New *destination-oriented elevators* required to be *accessible* shall comply with 407.3. New limited use/limited application elevators required to be *accessible* shall comply with 407.4. *Altered elements* of existing elevators shall comply with 407.5.

407.2 New Elevators. New *accessible* elevators shall comply with 407.2 and with ASME/ANSI A17.1. They shall be passenger elevators as classified by ASME/ANSI A17.1.

407.2.1 Automatic Operation. Elevator operation shall be automatic. Each car shall be equipped with a self-leveling feature that will automatically bring and maintain the car at floor landings within a tolerance of 1/2 inch (13 mm) under rated loading to zero loading conditions.

407.2.2 Call Buttons. Call buttons in elevator lobbies and halls shall be located vertically between 35 inches (890 mm) and 48 inches (1220 mm) above the floor, measured to the centerline of the button. A clear floor *space* complying with 305 shall be provided. Such call buttons shall have visible signals to indicate when each call is registered and when each call is answered. Call buttons shall be 3/4 inch (19 mm) minimum in the smallest dimension. The button that designates the up

direction shall be located above the button that designates the down direction. Buttons shall be raised or flush. Objects located beneath hall call buttons shall protrude 4 inches (100 mm) maximum into the clear floor *space*.

Figure 407.2.2

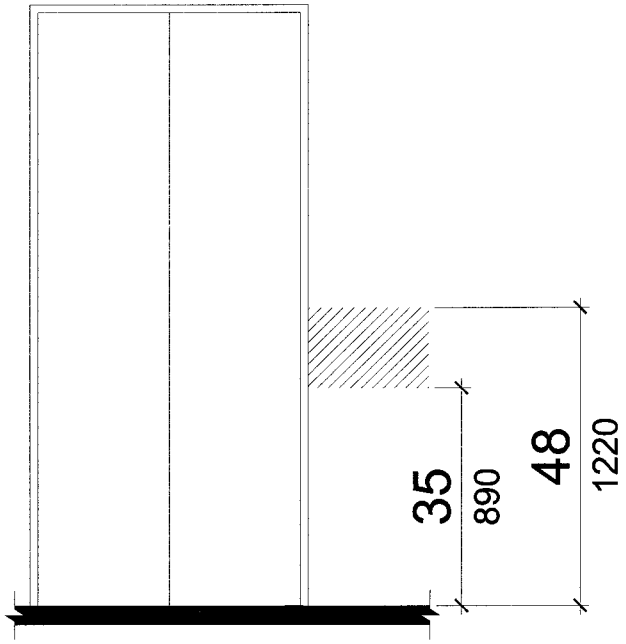

407.2.3 Hall Signals. A visible and audible signal shall be provided at each hoistway *entrance* to indicate which car is answering a call and the direction of travel. Alternatively, in-car signals shall be located in cars, visible from the floor area adjacent to the hall call buttons, and shall comply with the requirements of this section.

407.2.3.1 Audible Signals. Audible signals shall sound once for the up direction and twice for the down direction, or shall have verbal annunciators that state the word "up" or "down." Audible signals or verbal annunciators shall have a frequency of 1500 Hz maximum. The audible signal or verbal annunciator shall be 20 dBA minimum and 80 dBA maximum, measured at the hall call button.

407.2.3.2 Visible Signals. Visible signals shall comply with 407.2.3.2.

407.2.3.2.1 Height. Hall signal fixtures shall be centered at 72 inches (1830 mm) minimum above the floor or ground.

Figure 407.2.3.2.1

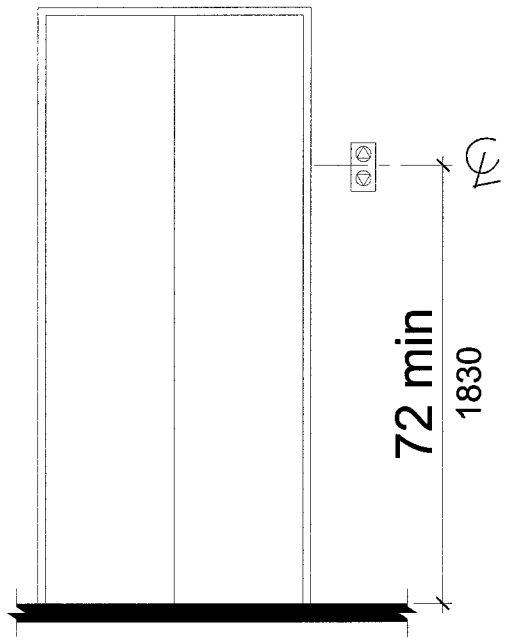

407.2.3.2.2 Size. The visible signal *elements* shall be 2-1/2 inches (64 mm) minimum measured along the vertical centerline of the *element*.

Figure 407.2.3.2.2

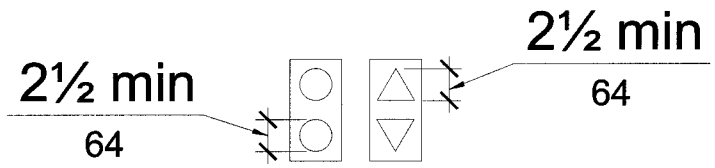

407.2.3.2.3 Visibility. Signals shall be visible from the floor area adjacent to the hall call button.

407.2.4 Tactile Signs on Hoistway Entrances. *Tactile character* and Braille floor designations shall be provided on both jambs of elevator hoistway *entrances* and shall be 60 inches (1525 mm) above the floor, measured from the baseline of the *characters*. A *tactile* star shall also be provided

on both jambs at the main entry level. Such *characters* shall be 2 inches (51 mm) high and shall comply with 703.2.

Figure 407.2.4

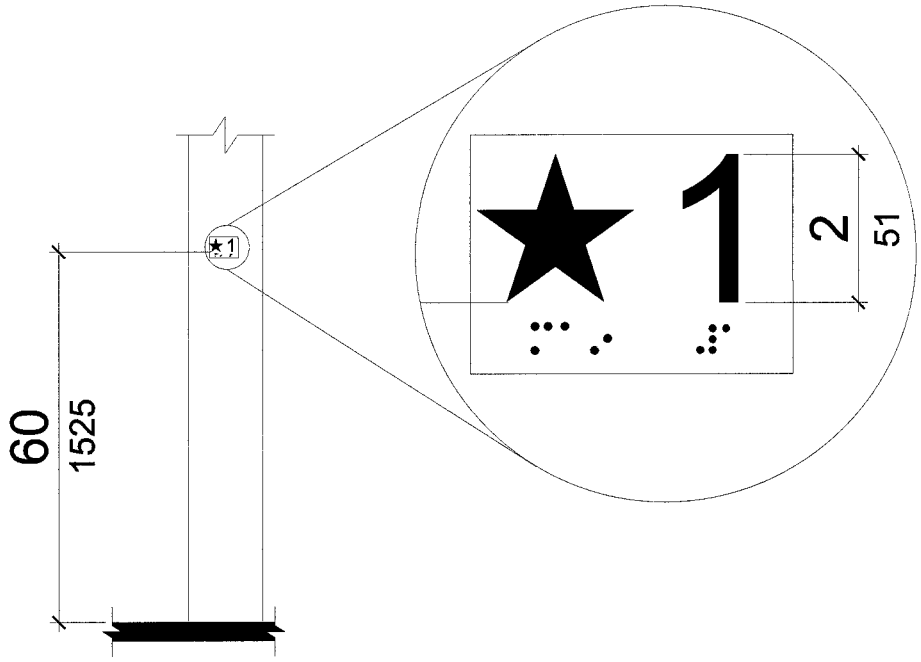

407.2.5 Door Operation. Elevator doors shall be the horizontal type. Elevator hoistway and car doors shall open and close automatically. Elevator doors shall be provided with a reopening device that shall stop and reopen a car door and hoistway door automatically if the door becomes obstructed by an object or person. The device shall be activated by sensing an obstruction passing through the opening at 5 inches (125 mm) and 29 inches (735 mm) above the floor. The device shall

not require physical contact to be activated, although contact may occur before the door reverses. Door reopening devices shall remain effective for 20 seconds minimum.

Figure 407.2.5

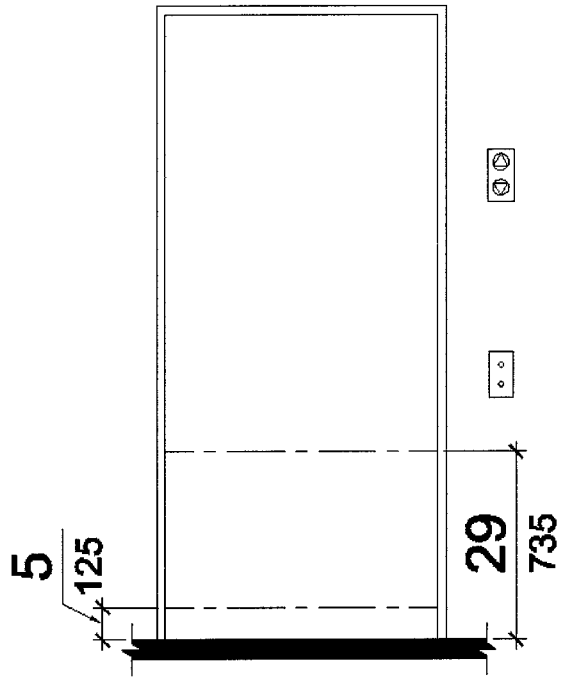

407.2.6 Door and Signal Timing for Hall Calls. The minimum acceptable time from notification that a car is answering a call or designation of which car is assigned to a lobby destination floor entry until the doors of that car start to close shall be calculated from the following equation:

T = D/(1.5 ft/s) or
T = D/(455 mm/s) = 5 seconds minimum

where T equals the total time in seconds and D equals the distance (in feet or millimeters) from the point in the lobby or corridor 60 inches (1525 mm) directly in front of the farthest call button controlling that car to the centerline of its hoistway door. For cars with in-car lanterns, T begins when the signal is visible from the point 60 inches (1525 mm) directly in front of the farthest hall call button and the audible signal is sounded.

407.2.7 Door Delay for Car Calls. Elevator doors shall remain fully open in response to a car call for 3 seconds minimum.

407.2.8 Inside Dimensions of Elevator Cars. Clear width of elevator doors and inside dimensions of elevator cars shall comply with Table 407.2.8.

Table 407.2.8 Elevator Door and Car Sizes

	Minimum Dimensions			
Door Location	**Door Clear Width**	**Inside Car, Side to Side**	**Inside Car, Back Wall to Front Return**	**Inside Car, Back Wall to Inside Face of Door**
Centered	42 inches (1065 mm)	80 inches (2030 mm)	51 inches (1295 mm)	54 inches (1370 mm)
Side (off-centered)	36 inches (915 mm)[1]	68 inches (1725 mm)	51 inches (1295 mm)	54 inches (1370 mm)
Any	36 inches (915 mm)[1]	54 inches (1370 mm)	80 inches (2030 mm)	80 inches (2030 mm)
Any	36 inches (915 mm)[1]	60 inches (1525 mm)[2]	60 inches (1525 mm)[2]	60 inches (1525 mm)[2]

1. A tolerance of minus 5/8 inch (16 mm) is permitted.
2. Other car configurations that provide a *wheelchair* turning *space* complying with 304 with the door closed are permited.

Figure 407.2.8

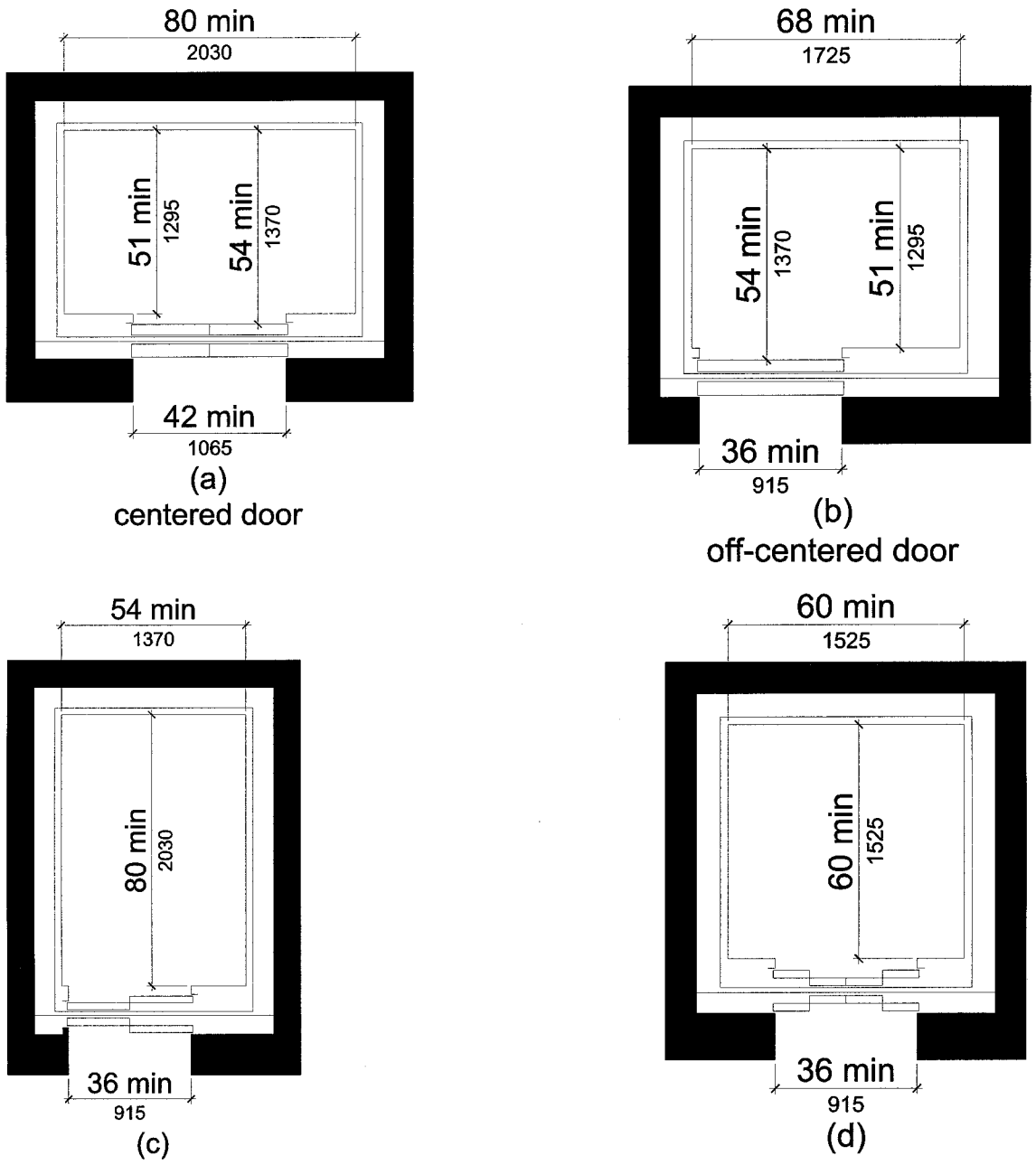

407.2.9 Floor Surfaces. Floor surfaces in elevator cars shall comply with 302. The clearance between the car platform sill and the edge of any hoistway landing shall be 1-1/4 inch (32 mm) maximum.

407.2.10 Illumination Levels. The level of illumination at the car controls, platform, car threshold and car landing sill shall be 5 footcandles (54 lux) minimum.

407.2.11 Car Controls. Elevator controls shall comply with 407.2.11.

407.2.11.1 Buttons. Buttons shall be 3/4 inch (19 mm) minimum in their smallest dimension. Buttons shall be raised or flush. Buttons shall be arranged with numbers in ascending order. When two or more columns of buttons are provided they shall read from left to right. Keypads, where provided, shall be in a standard telephone keypad arrangement.

Figure 407.2.11.1

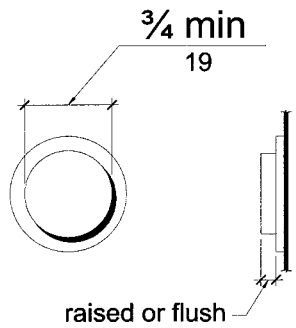

407.2.11.2 Designations and Indicators for Control Buttons. Control buttons shall be identified by *tactile characters* complying with 703.2. *Characters* and Braille shall be placed immediately to the left of the button to which the designations apply. The control button for the main entry floor and control buttons, other than remaining buttons with floor designations, shall be identified with *tactile* symbols as shown in Table 407.2.11.2. Buttons with floor designations shall be provided with visible indicators to show that a call has been registered. The visible indication shall extinguish when the car arrives at the designated floor. Where provided, telephone-style keypad buttons shall be identified by *tactile characters* complying with 703.2 except that Braille is not required. *Characters* shall be centered on the corresponding keypad button.

Table 407.2.11.2 Elevator Control Button Identification

Control Button	Tactile Symbol	Braille Message
Emergency Stop		⠌⠕⠏ "ST"OP" Three cells
Alarm		⠁⠇⠍ AL"AR"M Four cells

Table 407.2.11.2 Elevator Control Button Identification

Control Button	Tactile Symbol	Braille Message
Door Open		OP"EN" Three cells
Door Close		CLOSE Five cells
Main Entry Floor		MA"IN" Three cells
Phone		PH"ONE" Four cells

Figure 407.2.11.2

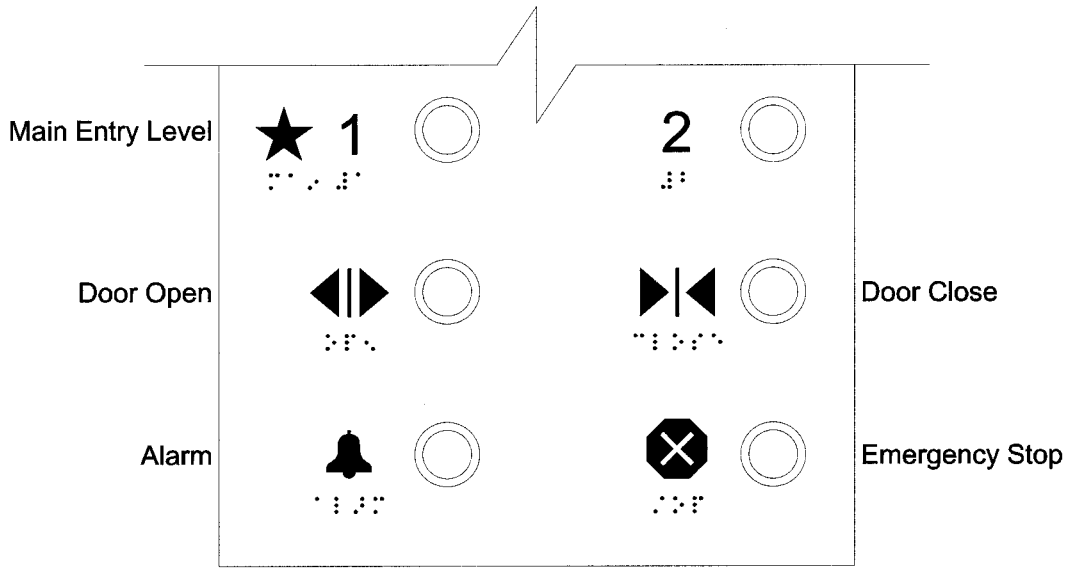

407.2.11.3 Height. Buttons with floor designations shall be located within one of the reach ranges specified in 308. Emergency controls, including the emergency alarm, shall be grouped

at the bottom of the panel. Emergency control buttons shall have their centerlines 35 inches (890 mm) minimum above the floor.

Figure 407.2.11.3

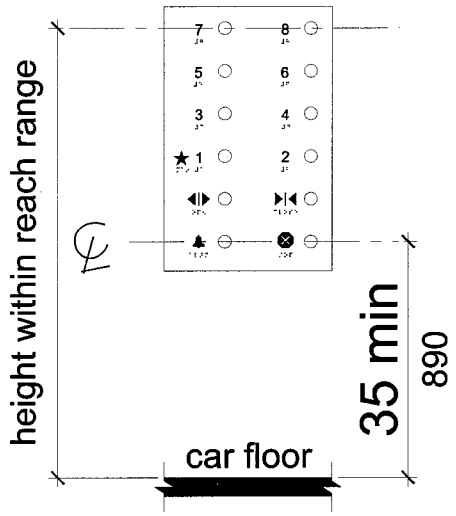

407.2.11.4 Location. Controls shall be located to accommodate a forward reach or side reach as specified in 308.

407.2.12 Car Position Indicators. In elevator cars, audible and visible car location indicators shall be provided.

407.2.12.1 Visible Indicators. Indicators shall be located above the car control panel or above the door. Numerals shall be 1/2 inch (13 mm) high minimum. As the car passes a floor and when a car stops at a floor served by the elevator, the corresponding *character* shall illuminate.

Figure 407.2.12.1

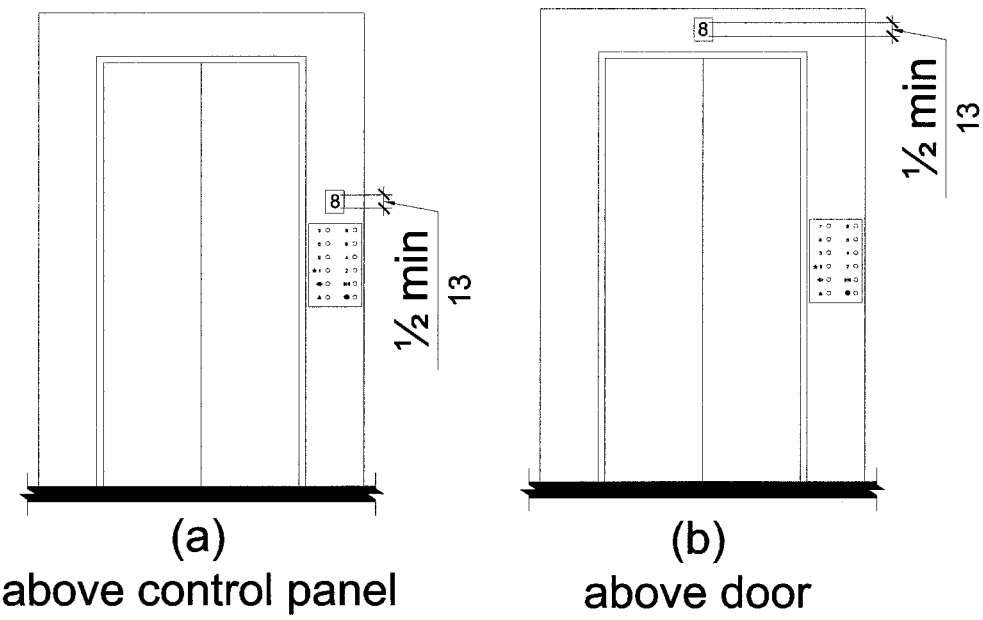

407.2.12.2 Audible Indicators. The audible signal shall be 20 dBA minimum and 80 dBA maximum, measured at the annunciator, and shall have a frequency of 1500 Hz maximum. The signal shall be an automatic verbal announcement which announces the floor at which the car has stopped.

EXCEPTION: For elevators that have a rated speed of 200 feet per minute (1 m/s) or less, an audible signal with a frequency of 1500 Hz maximum which sounds as the car passes or stops at a floor served by the elevator shall be permitted.

407.2.13 Emergency Communications. Emergency two-way communication systems between the elevator car and a point outside the hoistway shall comply with ASME/ANSI A17.1. The highest *operable part* of a two-way communication system shall be 48 inches (1220 mm) maximum above the floor. The device shall be identified by *tactile characters* complying with 703.2 located adjacent to the device. If the system uses a handset, the cord from the panel to the handset shall be 29 inches (735 mm) long minimum. The car emergency signaling device shall not be limited to voice

communication. If instructions for use are provided, essential information shall be presented in both *tactile* and visual form.

Figure 407.2.13

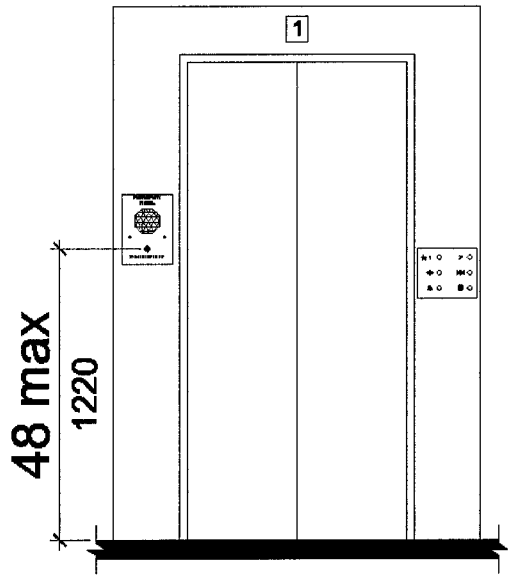

407.3 New Destination-Oriented Elevators. New *accessible destination-oriented elevators* shall comply with 407.2.1, 407.2.4 through 407.2.10, and 407.2.13. Such elevators shall also comply with 407.3 and ASME/ANSI A17.1. They shall be passenger elevators as classified by ASME/ANSI A17.1.

407.3.1 Call Buttons. Call buttons shall be located vertically between 35 inches (890 mm) and 48 inches (1220 mm) above the floor, measured to the centerline of the button. A clear floor *space* complying with 305 shall be provided. Call buttons shall be 3/4 inch (19 mm) minimum in the smallest dimension. Buttons shall be raised or flush. Objects located beneath hall call buttons shall protrude 4 inches (100 mm) maximum into the clear floor *space*. A keypad or other means for the entry of destination information shall be provided. Keypads, where provided, shall be in a standard telephone keypad arrangement. Visible and audible signals which indicate which elevator car to enter shall be provided.

407.3.2 Hall Signals. A visible and audible signal shall be provided to indicate a car destination corresponding with 407.3.1. The audible tone and verbal announcement shall be the same as those given at the call button or call button keypad. Each elevator in a bank shall have audible and visible means for differentiation.

407.3.2.1 Visible Signals. Visible signals shall comply with 407.3.2.1.

407.3.2.1.1 Height. Hall signal fixtures shall be centered at 72 inches (1830 mm) minimum above the floor or ground.

407.3.2.1.2 Size. The visible signal *elements* shall be 2-1/2 inches (64 mm) minimum measured along the vertical centerline of the *element*.

407.3.2.1.3 Visibility. Signals shall be visible from the floor area adjacent to the hoistway *entrance*.

407.3.3 Car Controls. Emergency controls, including the emergency alarm, shall have their centerlines 35 inches (890 mm) minimum and 48 inches (1220 mm) maximum above the floor. Buttons shall be 3/4 inch (19 mm) minimum in their smallest dimension. Buttons shall be raised or flush. Controls shall be located to accommodate a forward reach or side reach as specified in 308.

407.3.4 Car Position Indicators. In elevator cars, audible and visible car location indicators shall be provided.

407.3.4.1 Visible Indicators. Indicators shall be located above the car control panel or above the door. Numerals shall be 1/2 inch (13 mm) high minimum. A display shall be provided in the car with visible indicators to show car destinations. The visible indicators shall extinguish when the call has been answered.

407.3.4.2 Audible Indicators. An automatic verbal announcement which announces the floor at which the car has stopped shall be provided. The announcement shall be 20 dBA minimum and 80 dBA maximum, measured at the annunciator.

407.3.5 Elevator Car Identification. In addition to the *tactile signs* required by 407.2.4, a *tactile* elevator car identification shall be placed immediately below the hoistway *entrance* floor designation. The *characters* shall be 2 inches (51 mm) high and shall comply with 703.2.

Figure 407.3.5

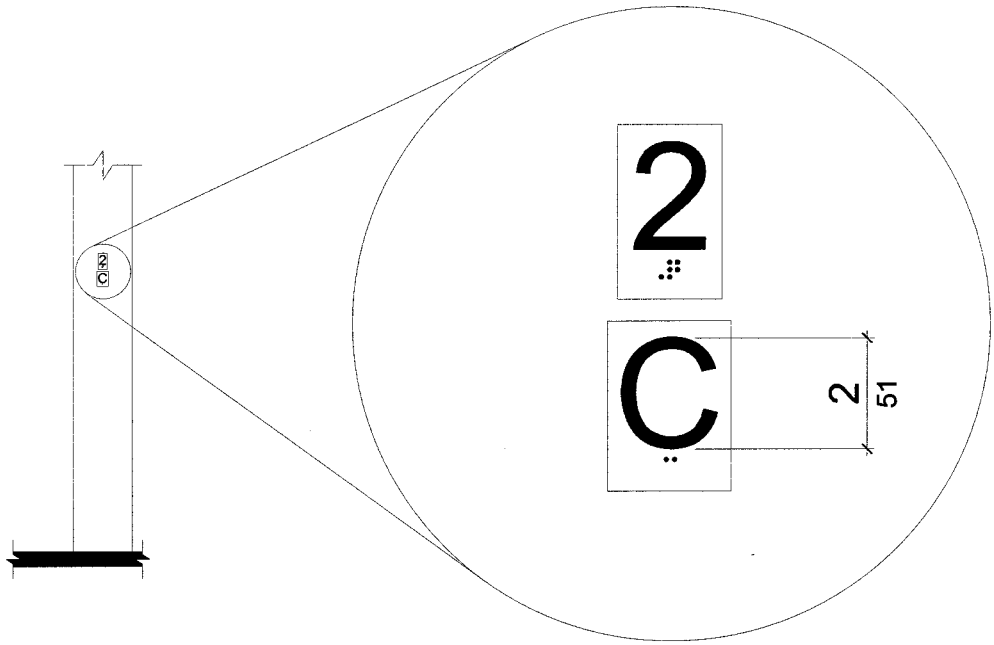

407.4 New Limited-Use/Limited-Application Elevators. New *accessible* limited-use/limited application elevators shall comply with 407.4 and shall comply with ASME/ANSI A17.1, Part XXV.

407.4.1 Automatic Operations. Elevator operation shall be automatic. Each car shall automatically stop at a floor landing within a tolerance of 1/2 inch (13 mm) under rated loading to zero loading conditions.

407.4.2 Call Buttons. Call buttons in elevator lobbies and halls shall be located vertically between 35 inches (890 mm) and 48 inches (1220 mm) above the floor, measured to the centerline of the button. Such call buttons shall have visible signals to indicate when each call is registered and when each call is answered. Call buttons shall be 3/4 inch (19 mm) minimum in the smallest dimension, and shall be raised or flush. The button that designates the up direction shall be located above the button that designates the down direction. Objects located beneath hall call buttons shall protrude into the floor area adjacent to the hoistway *entrance* 4 inches (100 mm) maximum.

407.4.3 Hall Signals. A visible and audible signal complying with 407.2.3 shall be provided in the car or at each hoistway *entrance* to indicate the direction of travel.

407.4.4 Tactile Signs on Hoistway Entrances. *Tactile character* and Braille floor designations shall be provided on both jambs of elevator hoistway *entrances* and shall be 60 inches (1525 mm) above the floor measured from the baseline of the *characters*. Such *characters* shall be 2 inches (51 mm) high minimum and shall comply with 703.2.

407.4.5 Door Operation. Elevator hoistway doors shall be either swinging or horizontally sliding type. Elevator hoistway and car doors shall open and close automatically. Horizontally sliding type hoistway and car doors shall comply with 407.2.5. Swinging hoistway doors shall conform to 404. Swinging doors shall be low-energy power-operated and shall comply with ANSI/BHMA A156.1.9. Power-operated swing doors shall remain open for 20 seconds minimum when activated.

407.4.6 Inside Dimensions of Elevator Cars. Elevator cars shall provide a clear width of 42 inches (1065 mm) minimum and a clear depth of 54 inches (1370 mm) minimum. For installations in existing *buildings* or *facilities*, elevator cars shall provide a clear width of 36 inches (915 mm) minimum, a clear depth of 54 inches (1370 mm) minimum, and a net clear platform area of 15 square feet (1.4 m^2) minimum. Car doors shall be positioned at the narrow end of the car and shall provide a clear width of 32 inches (815 mm) minimum.

Figure 407.4.6

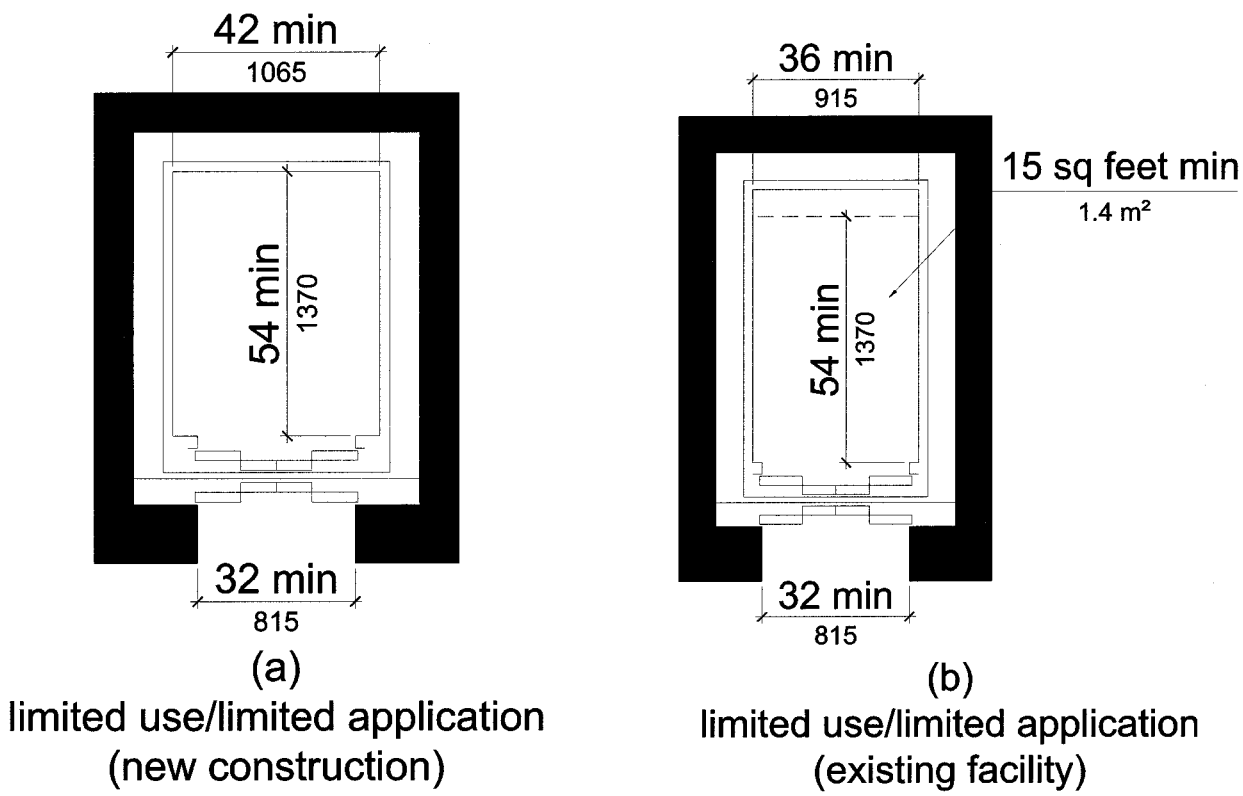

407.4.7 Floor Surfaces. Floor surfaces in elevator cars shall comply with 302. The horizontal distance between the car platform sill and the edge of any hoistway landing shall be 1-1/4 inches (32 mm) maximum.

407.4.8 Illumination Levels. The level of illumination at the car controls, platform, and car threshold and landing sill shall be 5 footcandles (53.8 lux) minimum.

407.4.9 Car Controls. Elevator controls shall comply with 407.2.11. Controls shall be centered on a side wall and shall comply with 309.

407.4.10 Emergency Communications. Car emergency signaling devices complying with 407.2.13 shall be provided.

407.5 Existing Elevators. *Altered elements* of existing *destination-oriented elevators* shall comply with 407.3. *Altered elements* of existing limited-use/limited-application elevators shall comply with 407.4. *Altered elements* of all other existing elevators shall comply with 407.2.1, 407.2.4, 407.2.6, 407.2.7, 407.2.9, 407.2.10 and 407.2.13 and with 407.5 or shall comply with 407.2. They shall be passenger elevators as classified by ASME/ANSI A17.1.

407.5.1 Call Buttons. Call buttons in elevator lobbies and halls shall be located vertically between 35 inches (890 mm) and 54 inches (1370 mm) above the floor, measured to the centerline of the button. A clear floor or ground *space* complying with 305 shall be provided. The button that designates the up direction shall be located above the button that designates the down direction. Keypad controls, if provided, shall comply with 407.2.11.

Figure 407.5.1

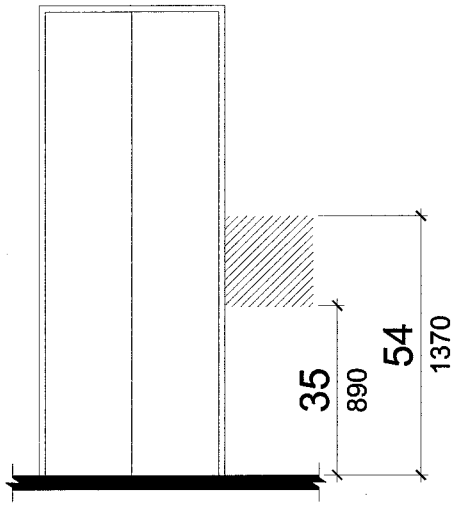

407.5.2 Hall Signals. A visible and audible signal at each hoistway *entrance* to indicate which car is answering a call or in-car signals complying with 407.2.3 shall be provided. Audible signals shall sound once for the up direction and twice for the down direction, or shall have verbal annunciators that state the word "up" or "down". If new hall signals are installed, they shall comply with 407.2.3.

407.5.3 Door Operation. Power-operated horizontally sliding car and hoistway doors opened and closed by automatic means shall comply with 407.2.5. Existing manually operated hoistway swing doors shall comply with 404.2.3 and 404.2.9. A power-operated car door that opens and maintains a 32 inches (815 mm) minimum clear width shall be provided. Closing of the car door shall not be initiated until the hoistway door is closed. Car gates are prohibited.

407.5.4 Inside Dimensions of Elevator Cars. The inside dimensions of elevator cars shall comply with 407.2.8.

EXCEPTION: This requirement shall not apply to existing elevator car configurations that provide a clear floor area of 16 square feet (1.5 m^2) minimum, and provide 54 inches (1370 mm) minimum inside clear depth and 36 inches (915 mm) minimum clear width.

Figure 407.5.4 Exception

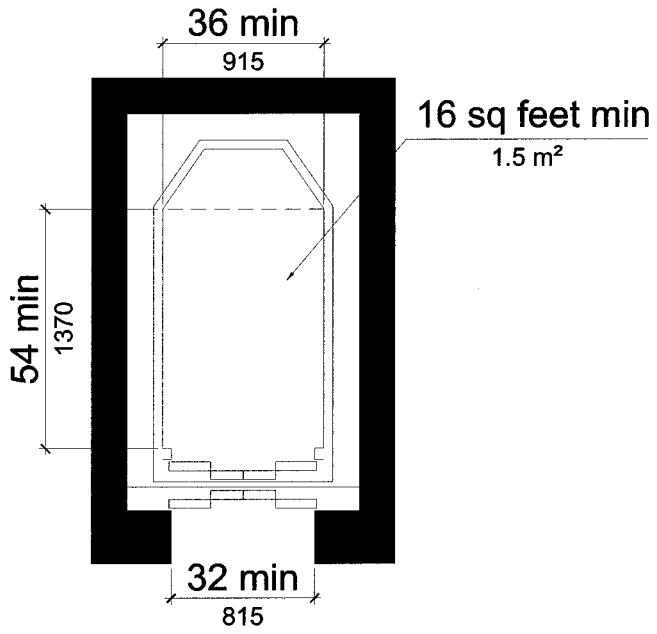

407.5.5 Car Controls. Elevator controls shall comply with 407.5.5.

407.5.5.1 Buttons. Control buttons shall be 3/4 inch (19 mm) minimum in their smallest dimension. Control buttons shall be raised, flush or recessed. Where the car operating panel is changed, control buttons shall comply with 407.2.11.1.

Figure 407.5.5.1

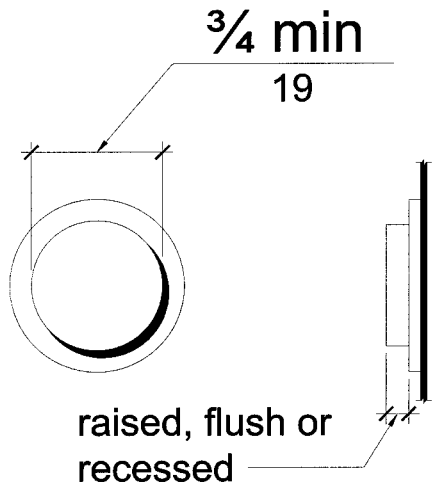

407.5.5.2 Designations and Indicators for Control Buttons. Control buttons shall comply with 407.2.11.2.

EXCEPTION: Where *space* on an existing car operating panel precludes *tactile* markings to the left of the controls, markings shall be placed as near to the control as possible.

407.5.5.3 Height. Floor buttons shall be located 54 inches (1370 mm) maximum above the floor for parallel approach and 48 inches (1220 mm) maximum for front approach. Where the panel is changed, it shall comply with 407.2.11.3.

407.5.5.4 Operating Panels. Where a new car operating panel complying with 407.2.11 is provided, existing car operating panels shall not be required to comply with 407.2.11.

407.5.6 Car Position Indicators. Where a new car position indicator is provided, the indicator shall comply with 407.2.12.

407.5.7 Identification. *Accessible* elevators shall be clearly identified with the International Symbol of Accessibility complying with 703.7, unless all elevators in the *building* or *facility* are *accessible*.

408 Wheelchair (Platform) Lifts

408.1 General. *Wheelchair* (platform) lifts shall comply with ASME/ANSI A17.1 and with 302, 305 and 309. *Wheelchair* (platform) lifts shall not be attendant-operated and shall provide unassisted entry and exit from the lift.

Advisory 408.1
Inclined stairway chairlifts and inclined and vertical platform lifts are available for short-distance vertical transportation. Because an *accessible route* requires an 80 inch (2030 mm) vertical clearance, care should be taken in selecting lifts as they may not be equally suitable for use by *wheelchair* users and standees. If a lift does not provide 80 inch (2030 mm) vertical clearance, it cannot be considered part of an *accessible route* in new construction.

408.2 Doors and Gates. Lifts shall have low-energy power-operated doors or gates complying with 404.3. Doors and gates shall remain open for 20 seconds minimum. End doors shall be 32 inches (815 mm) minimum clear width. Side doors shall be 42 inches (1065 mm) minimum clear width.

Figure 408.2

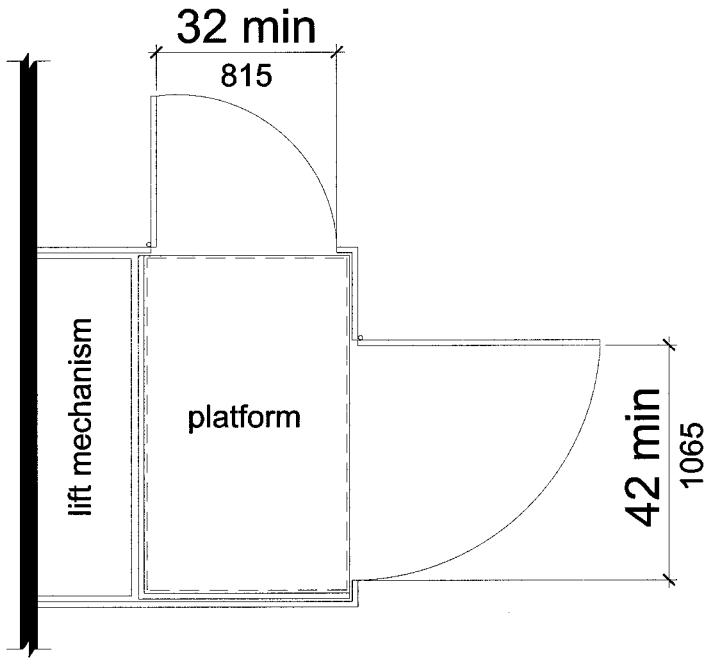

EXCEPTION: Lifts having doors or gates on opposite sides shall be permitted to have self-closing manual doors or gates.

409 Accessible Means of Egress

409.1 General. Each required *accessible means of egress* shall be continuous to a *public way* and shall consist of one or more of the following components*: accessible routes* complying with 402, exit stairways complying with 409.2, elevators complying with 409.3, horizontal exits or smoke barriers. *Wheelchair* (platform) lifts shall not serve as part of an *accessible means of egress.*

409.2 Exit Stairways. An exit stairway to be considered part of an *accessible means of egress* shall conform to 504 and shall have a clear width of 48 inches (1220 mm) minimum between handrails and shall either incorporate an *area of refuge* within an enlarged floor-level landing or shall be accessed from either an *area of refuge* complying with 410 or a horizontal exit.

EXCEPTIONS: 1. This requirement shall not apply to exit stairways serving a single guest room.
2. This requirement shall not apply to exit stairways in *buildings* or *facilities* protected throughout by a supervised automatic sprinkler system.

Advisory 409.2 Exception 2
Supervised automatic sprinkler systems have built-in signals for monitoring features of the system which indicate conditions that will impair the satisfactory operation of the sprinkler system.

3. The clear width of 48 inches (1220 mm) between handrails is not required for exit stairways accessed from a horizontal exit.
4. This requirement shall not apply to exit stairways serving open parking garages.

409.3 Elevators. An elevator to be considered part of an *accessible means of egress* shall comply with the requirements of Rule 211 of ASME/ANSI A17.1 and standby power shall be provided. The elevator shall be accessed from either an *area of refuge* complying with 410 or a horizontal exit.

EXCEPTIONS: 1. Elevators are not required to be accessed from an *area of refuge* or horizontal exit in open parking garages.
2. Elevators are not required to be accessed from an *area of refuge* or horizontal exit in *buildings* and *facilities* protected throughout by a supervised automatic sprinkler system.

410 Areas of Refuge

410.1 General. Where *areas of refuge* are required, they shall comply with 410.

EXCEPTION: *Areas of refuge* are not required in detention and correctional *facilities.*

410.2 Location. Each *area of refuge* shall be accessed from the *space* it serves by an *accessible route* which serves as an *accessible means of egress.* The maximum travel distance to an *area of refuge* shall not exceed the travel distance permitted for the occupancy by the *administrative authority.* Every *area of refuge* shall have direct access to an exit stairway complying with 409.2 or an elevator complying with 409.3.

410.3 Size. Each *area of refuge* shall be sized to accommodate one *wheelchair space* complying with 305.3 for each 200 occupants or fraction thereof, based on the occupant load of the *area of refuge* and all areas served by the *area of refuge*. Such *wheelchair spaces* shall not overlap the required means of egress width. Access to any required *wheelchair space* shall not be through more than one adjoining *wheelchair space*.

410.4 Construction. Each *area of refuge* shall be separated from the remainder of the *story* by a smoke barrier having a one-hour minimum fire-resistance rating. Smoke barriers shall extend to the floor or roof deck above. Doors in the smoke barrier shall have a 20 minute minimum fire-resistance rating. Doors shall be self-closing or automatic closing by smoke detection. HVAC openings in smoke barriers, where permitted, shall be ducted and provided with a smoke-actuated damper designed to resist the passage of smoke.

410.5 Smoke Resistance. Every *area of refuge* shall be designed to prevent the intrusion of smoke.

EXCEPTIONS: 1. This requirement shall not apply where the *areas of refuge* and all areas served by the *area of refuge* are protected by a supervised automatic sprinkler system.
2. This requirement shall not apply to *areas of refuge* located within an exit stair enclosure.

410.5.1 Elevator Lobby. Where an elevator lobby is used as an *area of refuge*, the elevator hoistway and lobby shall be pressurized to comply with the requirements for smokeproof enclosures, except where elevators are in an *area of refuge* formed by a horizontal exit or smoke barrier.

410.6 Communication System. Every *area of refuge* shall be provided with an *accessible* two-way communication system between the *area of refuge* and a central control point. The communication system shall have both audible and visible signals.

Advisory 410.6
The two-way communication system must be equipped with both audible signals and visual signals and cannot operate solely through voice communication. Audible signals can include voice output or recorded messages. A button that lights to indicate that help is on the way when the call is answered is an acceptable visual signal.

410.7 Instructions. In each *area of refuge* provided with a two-way communication system, instructions on the use of the area under emergency conditions shall be posted adjacent to the communications system. The instructions shall include:

1. Directions to other means of egress.
2. Advice that persons able to use the exit stairs do so as soon as possible unless they are assisting others.
3. Information on planned availability of assistance in the use of stairs or supervised operation of elevators and how to summon such assistance.
4. Directions for use of emergency communications system.

410.8 Identification. Each *area of refuge* shall be identified by a *tactile sign* stating "Area of Refuge" complying with 703.2 and including the International Symbol of Accessibility complying with 703.7. A *sign* shall be located at each door providing access to the *area of refuge*. The *sign* shall be illuminated as required for exit *signs* where exit *sign* illumination is required.

CHAPTER 5: GENERAL SITE AND BUILDING ELEMENTS

501 General

501.1 Scope. General *site* and *building elements* required to be *accessible* by Chapter 2 shall comply with the applicable provisions of this chapter.

502 Parking Spaces

502.1 General. Car and van parking *spaces* required to be *accessible* shall comply with 502.

502.2 Vehicle Spaces. Car and van parking *spaces* shall be 96 inches (2440 mm) wide minimum, shall be marked to define the width, and shall have an adjacent access aisle complying with 502.3.

Figure 502.2

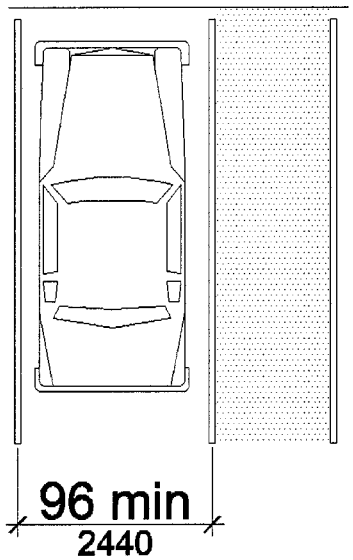

502.3 Access Aisle. Access aisles serving parking *spaces* shall comply with 502.3. Access aisles shall adjoin an *accessible route*. Two parking *spaces* shall be permitted to share a common access aisle.

Figure 502.3

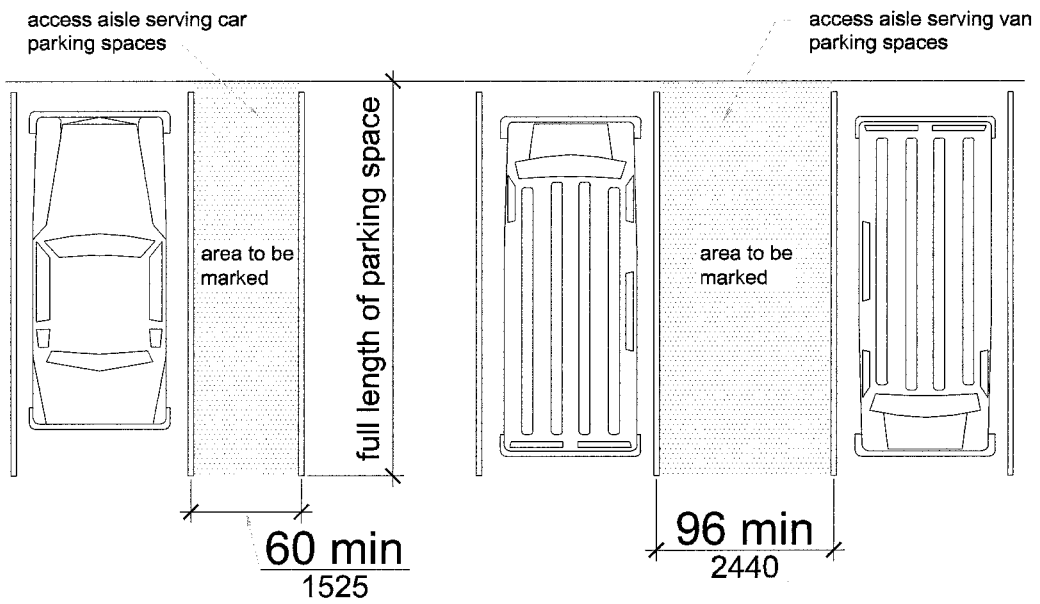

502.3.1 Width. Access aisles serving car parking *spaces* shall be 60 inches (1525 mm) wide minimum. Access aisles serving van parking *spaces* shall be 96 inches (2440 mm) wide minimum.

502.3.2 Length. Access aisles shall extend the full length of the parking *spaces* they serve.

502.3.3 Marking. Access aisles shall be marked so as to discourage parking in them.

Advisory 502.3.3

The method and color of marking are not specified in this document but may be addressed by State or local laws or regulations. Since van access aisles are required to be as wide as the *accessible* parking *space*, it is important that they be clearly marked. Bollards or other barriers can help prevent misuse of the aisle provided that they do not obstruct the access aisle or required connecting *accessible route*. If used, bollards must be placed at the boundary of the access aisle so they do not prevent the deployment of *wheelchair* lifts or the use of mobility aids.

502.4 Floor or Ground Surfaces. Parking *spaces* and access aisles serving them shall comply with 302. Changes in level are not permitted. Access aisles shall be at the same level as the parking *spaces* they serve.

Advisory 502.4
Access aisles are required to be level in all directions to provide a level surface for *wheelchair* transfer to and from vehicles.

EXCEPTION: Slopes not steeper than 1:48 shall be permitted.

502.5 Vertical Clearance. Van parking *spaces*, access aisles serving them, and a vehicular route from an *entrance* to van parking *spaces* and from van parking *spaces* to an exit shall provide a vertical clearance of 98 inches (2490 mm) minimum.

502.6 Identification. Where *accessible* parking *spaces* are required to be identified by *signs*, the *signs* shall include the International Symbol of Accessibility complying with 703.7. Such *signs* shall be 60 inches (1525 mm) minimum above the floor or ground surface measured to the bottom of the *sign*.

503 Passenger Loading Zones

503.1 General. Passenger loading zones required to be *accessible* shall comply with 503.

503.2 Vehicle Pull-up Space. Passenger loading zones shall provide a vehicular pull-up *space* 96 inches (2440 mm) minimum in width, 20 feet (6100 mm) minimum in length and an adjacent access aisle complying with 503.3.

503.3 Access Aisle. Access aisles serving passenger loading zones shall comply with 503.3. Access aisles shall adjoin an *accessible route*.

Figure 503.3

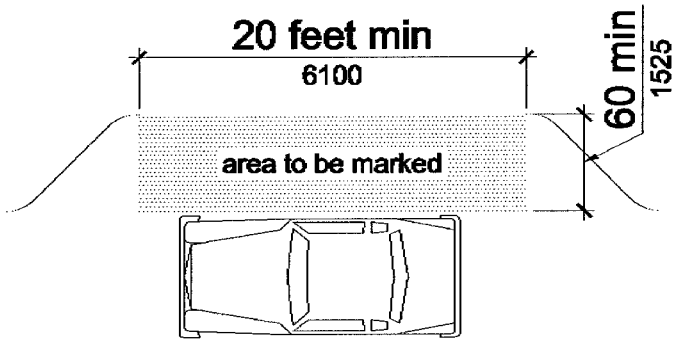

503.3.1 Width. Access aisles serving vehicle pull-up *spaces* shall be 60 inches (1525 mm) wide minimum.

503.3.2 Length. Access aisles shall be 20 feet (6100 mm) minimum in length and shall extend the full length of the vehicle pull-up *spaces* they serve.

503.3.3 Marking. Access aisles shall be marked so as to discourage parking in them.

503.4 Floor and Ground Surfaces. Vehicle pull-up *spaces* and access aisles serving them shall comply with 302. Changes in level are not permitted. Access aisles shall be at the same level as the vehicle pull-up *space* they serve.

EXCEPTION: Slopes not steeper than 1:48 shall be permitted.

503.5 Vertical Clearance. Vehicle pull-up *spaces*, access aisles serving them, and a vehicular route from an *entrance* to the passenger loading zone, and from the passenger loading zone to an exit, shall provide a vertical clearance of 114 inches (2895 mm) minimum.

504 Stairways

504.1 General. Stairs required to be *accessible* shall comply with 504.

Advisory 504.1
Although these requirements do not mandate handrails on stairs that are not part of a means of egress, State or local *building* codes may require handrails.

504.2 Treads and Risers. All steps on a flight of stairs shall have uniform riser heights and uniform tread depths. Risers shall be 4 inches (100 mm) minimum in height and 7 inches (180 mm) maximum in height. Treads shall be 11 inches (280 mm) minimum in depth, measured from riser to riser.

Figure 504.2

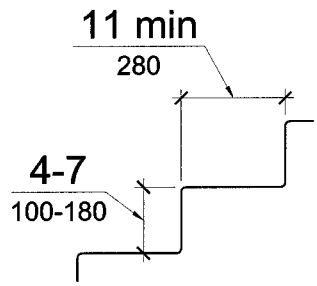

504.3 Open Risers. Open risers are not permitted.

504.4 Tread Surface. Stair treads shall comply with 302. Changes in level are not permitted.

EXCEPTION: Treads shall be permitted to have a slope not steeper than 1:48.

504.5 Nosings. The radius of curvature at the leading edge of the tread shall be 1/2 inch (13 mm) maximum. Nosings that project beyond vertical risers shall have the underside of the leading edge curved or beveled. If not vertical, risers shall slope under the tread at an angle of 30 degrees maximum from vertical; however, the permitted projection of the nosing shall be 1-1/2 inches (38 mm) maximum beyond the rear of the tread below.

Figure 504.5

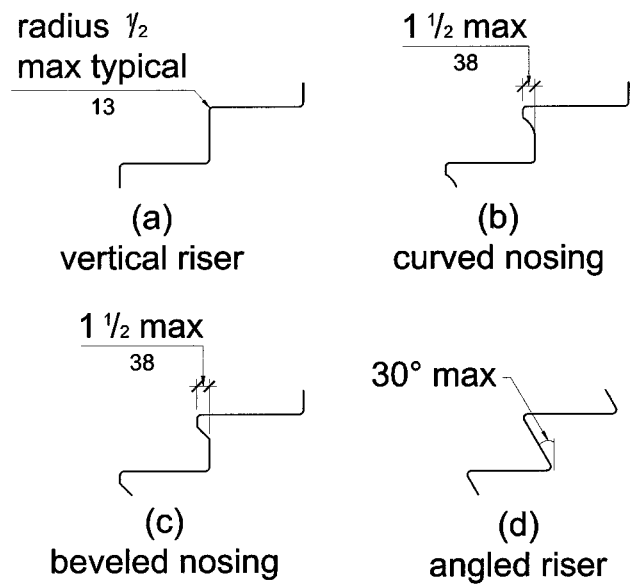

504.6 Handrails. Stairs shall have handrails complying with 505.

504.7 Wet Conditions. Landings subject to wet conditions shall be designed to prevent the accumulation of water.

505 Handrails

505.1 General. Handrails required by 405 at *ramps* or 504 at stairs shall comply with 505.

505.2 Where Required. Handrails shall be provided on both sides of stairs and *ramps.*

EXCEPTIONS: 1. Handrails are not required on both sides of aisle stairs and aisle *ramps* provided with a handrail at either side or within the aisle width.
2. Handrails are not required on *ramps* with a rise of 6 inches (150 mm) maximum.

505.3 Continuity. Handrails shall be continuous within the full length of each stair flight or *ramp* run.

EXCEPTION: Handrails are not required to be continuous in aisles serving seating.

505.4 Height. Top of gripping surfaces of handrails shall be 34 inches (865 mm) minimum and 38 inches (965 mm) maximum vertically above stair nosings and *ramp* surfaces. Handrails shall be at a consistent height above stair nosings and *ramp* surfaces.

Figure 505.4

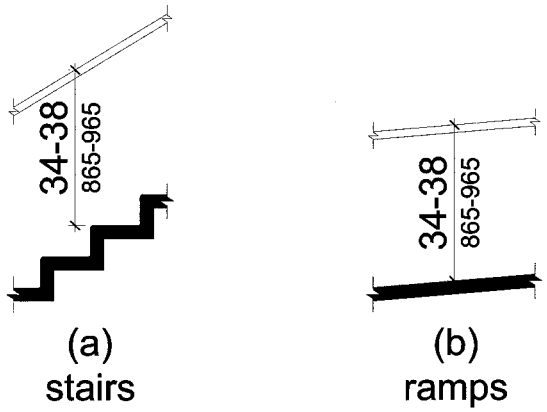

Advisory 505.4

The requirements for stair and *ramp* handrails in this document are for adults. When children are the principle users in a *building* or *facility* (e.g., elementary schools), a second set of handrails at an appropriate height can assist them and aid in preventing accidents. A maximum height of 28 inches (710 mm) measured to the top of the gripping surface from the ramp surface or stair nosing is recommended for handrails designed for children. Sufficient vertical clearance between upper and lower handrails, 9 inches (230 mm) minimum, should be provided to help prevent entrapment.

505.5 Clearance. Clearance between handrail and wall shall be 1-1/2 inches (38 mm) minimum.

Figure 505.5

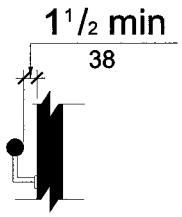

505.6 Gripping Surface. Gripping surfaces shall be continuous, without interruption by newel posts, other construction *elements*, or obstructions.

EXCEPTION: Handrail brackets or balusters attached to the bottom surface of the handrail shall not be considered obstructions provided they comply with the following:

a. not more than 20 percent of the handrail length is obstructed;

b. horizontal projections beyond the sides of the handrail occur 2-1/2 inches (64 mm) minimum below the bottom of the handrail; and

Figure 505.6 Exception

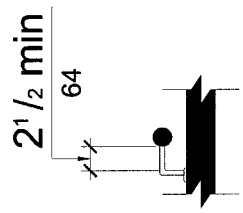

c. edges have a 1/8 inch (3.2 mm) minimum radius.

505.7 Cross Section. Handrails shall have a circular cross section with an outside diameter of 1-1/4 inches (32 mm) minimum and 2 inches (51 mm) maximum, or shall provide equivalent graspability in accordance with 505.7.1.

Figure 505.7

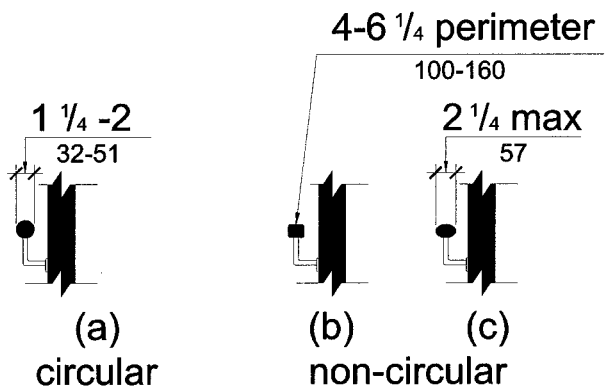

505.7.1 Non-Circular Cross Sections. Non-circular cross sections shall have a perimeter dimension of 4 inches (100 mm) minimum and 6-1/4 inches (160 mm) maximum, and a cross-section dimension of 2-1/4 inches (57 mm) maximum.

505.8 Surfaces. Handrails and any wall or other surfaces adjacent to them shall be free of any sharp or abrasive *elements*. Edges shall have a 1/8 inch (3.2 mm) minimum radius.

505.9 Fittings. Handrails shall not rotate within their fittings.

505.10 Handrail Extensions. Handrails shall extend beyond stair runs and *ramp* runs in accordance with 505.10.

EXCEPTIONS: 1. Extensions are not required for continuous handrails at the inside turn of switchback or dogleg stairs and *ramps*.
2. Extensions are not required for handrails in aisles serving seating where the handrails are necessarily discontinuous to provide access to seating and to permit crossovers within the aisle.
3. In *alterations*, full extensions of handrails shall not be required where such extensions would be hazardous or impossible due to plan configuration.

505.10.1 Top and Bottom Extension at Ramps. *Ramp* handrails shall extend horizontally above the landing for 12 inches (305 mm) minimum beyond the top and bottom of *ramp* runs. Such extension shall return to a wall, guard, or the walking surface, or shall be continuous to the handrail of an adjacent *ramp* run.

Figure 505.10.1

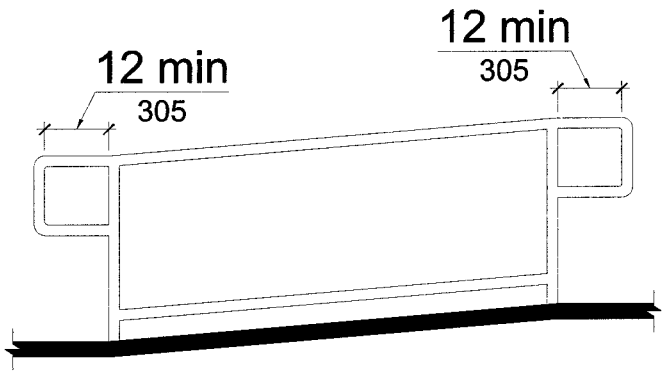

505.10.2 Top Extension at Stairs. At the top of a stair flight, handrails shall extend horizontally above the landing for 12 inches (305 mm) minimum beginning directly above the first riser nosing.

Such extension shall return to a wall, guard, or the walking surface, or shall be continuous to the handrail of an adjacent stair flight.

Figure 505.10.2

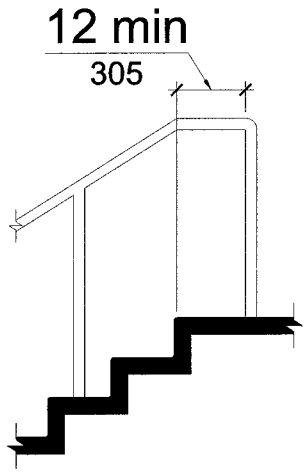

505.10.3 Bottom Extension at Stairs. At the bottom of a stair flight, handrails shall extend at the slope of the stair flight for a horizontal distance equal to one tread depth beyond the last riser nosing and an additional 12 inches (305 mm) minimum horizontally at a height equal to that of the sloping portion of the handrail as measured above the stair nosings. Such extension shall return to a wall, guard, or the walking surface, or shall be continuous to the handrail of an adjacent stair flight.

Figure 505.10.3

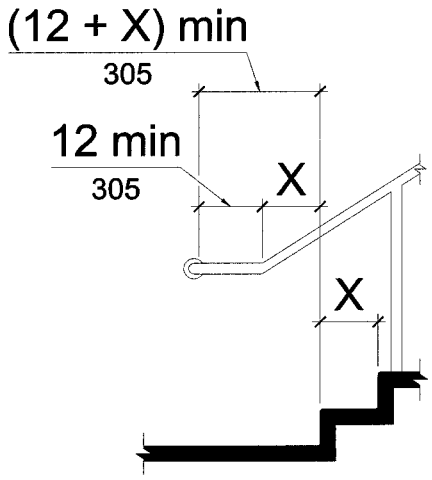

CHAPTER 6: PLUMBING ELEMENTS AND FACILITIES

601 General

601.1 Scope. Plumbing *elements* and *facilities* required to be *accessible* by Chapter 2 shall comply with the applicable provisions of this chapter.

602 Drinking Fountains and Water Coolers

602.1 General. Drinking fountains and water coolers required to be *accessible* shall comply with 307 and 602.

602.2 Clear Floor Space. Units shall have a clear floor or ground *space* complying with 305. A forward approach complying with 602.2.1 shall be provided at wall and post-mounted cantilevered units.

Advisory 602.2
A drinking fountain that provides a parallel approach, although considered *accessible*, requires a person to twist in the *wheelchair* to use the fountain. A drinking fountain that has knee clearance for a forward approach provides greater accessibility.

EXCEPTION: A parallel approach complying with 602.2.2 shall be permitted at wall and post-mounted cantilevered units for *children's use* where the spout is 30 inches (760 mm) maximum above the floor or ground.

602.2.1 Forward Approach. Where a forward approach is provided, the clear floor *space* shall be centered on the unit and shall include knee and toe clearance complying with 306.

602.2.2 Parallel Approach. Where a parallel approach is provided, the clear floor *space* shall be centered on the unit.

602.3 Operable Parts. *Operable parts* shall comply with 309.

602.4 Spout Height. Spout outlets shall be 36 inches (915 mm) maximum above the floor or ground.

Figure 602.4

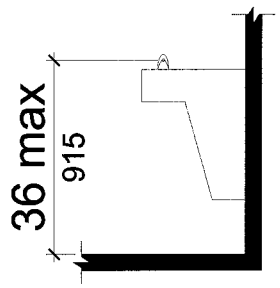

602.5 Spout Location. Units with a parallel approach shall have the spout located 3-1/2 inches (90 mm) maximum from the front edge of the unit, including bumpers. Units with a forward approach shall have the spout located 15 inches (380 mm) minimum from the vertical support and 5 inches (125 mm) maximum from the front edge of the unit, including bumpers.

Figure 602.5

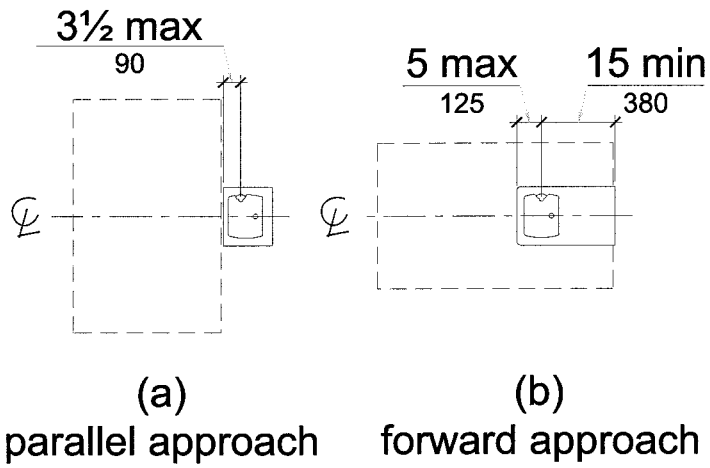

602.6 Water Flow. The spout shall provide a flow of water 4 inches (100 mm) high minimum so as to allow the insertion of a cup or glass under the flow of water. Measured horizontally relative to the front face of the unit, the angle of the water stream from spouts located within 3 inches (75 mm) of the front of the unit shall be 30 degrees maximum and from spouts located between 3 inches (75 mm) and 5 inches (125 mm) from the front shall be 15 degrees maximum.

602.7 Drinking Fountains for Standing Persons. Spout outlets shall be 39 inches (990 mm) minimum and 43 inches (1090 mm) maximum above the floor or ground.

603 Toilet and Bathing Rooms

603.1 General. Toilet and bathing rooms required to be *accessible* shall comply with 603.

603.2 Clear Floor Space.

603.2.1 Wheelchair Turning Space. *Wheelchair* turning *space* complying with 304 shall be provided within the room.

Advisory 603.2.1
Wheelchair turning *space* should be in a location that provides the greatest access. A room should be designed so as to minimize the amount of backing up a person with a disability must do when *accessible elements*, such as toilet stalls, are located along narrow corridors.

603.2.2 Overlap. Required clear floor *spaces*, clearance around water closets, and *wheelchair* turning *space* shall be permitted to overlap.

603.2.3 Doors. Doors shall not swing into the clear floor *space* or clearance required for any fixture.

Advisory 603.2.3
While toilet and bathing room doors cannot swing into clearances for fixtures, they may swing into the *wheelchair* turning *space* as permitted by 304.4.

EXCEPTIONS: 1. Doors to a toilet and bathing room for a single occupant, accessed only through a private office and not for *common use* or *public use* shall be permitted to swing into the clear floor *space* provided the swing of the door can be reversed to meet 603.2.3.
2. This requirement shall not apply where the toilet and bathing room is for individual use and a clear floor *space* complying with 305.3 is provided within the room, beyond the arc of the door swing.

603.3 Mirrors. Mirrors shall be installed with the bottom edge of the reflecting surface 40 inches (1015 mm) maximum above the finish floor.

Figure 603.3

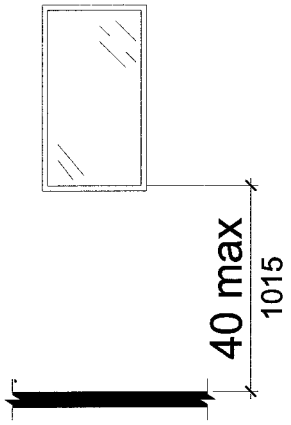

Advisory 603.3

In order for mirrors to be usable by both ambulatory people and people who use *wheelchairs*, the top edge of mirrors should be 74 inches (1880 mm) minimum from the floor or ground. A single, full-length mirror can accommodate a greater number of people including children.

603.4 Coat Hooks and Shelves. *Accessible* coat hooks provided within toilet rooms shall be located within one of the reach ranges specified in 308. Where provided, a fold-down shelf shall be located 40 inches (1015 mm) minimum and 48 inches (1220 mm) maximum above the floor.

604 Water Closets and Toilet Compartments

604.1 General. Water closets and toilet compartments required to be *accessible* shall comply with 604.2 through 604.8.

EXCEPTION: Water closets and toilet compartments for *children's use* shall be permitted to comply with 604.9.

604.2 Location. The water closet shall be located with a wall or partition to the rear and to one side. The centerline of the water closet shall be 16 inches (405 mm) minimum to 18 inches (455 mm)

maximum from the side wall or partition, except that the water closet shall be centered in the non-*wheelchair accessible* toilet compartment specified in 604.8.2.

Figure 604.2

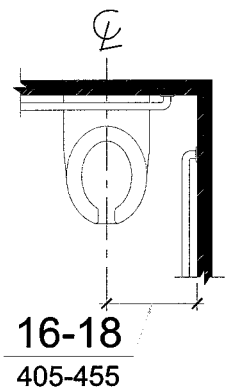

604.3 Clear Floor Space.

604.3.1 Clearance. Clearance around a water closet shall be 60 inches (1525 mm) minimum measured perpendicular from the side wall and 56 inches (1420 mm) minimum measured perpendicular from the rear wall. No other fixtures or obstructions shall be located within the required water closet clearance.

Figure 604.3.1

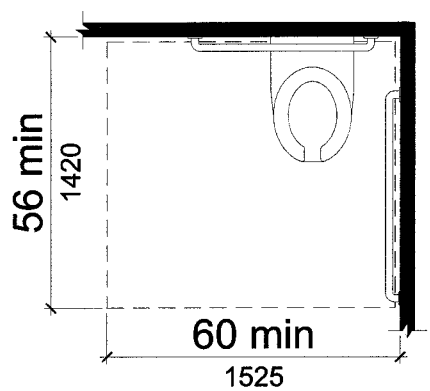

604.3.2 Overlap. The required clearance around the water closet shall be permitted to overlap the fixture, associated grab bars, tissue dispensers, *accessible routes*, clear floor *space* required at other fixtures and the *wheelchair* turning *space*.

604.4 Height. The height of water closets shall be 17 inches (430 mm) minimum to 19 inches (485 mm) maximum measured to the top of the toilet seat. Seats shall not be sprung to return to a lifted position.

Figure 604.4

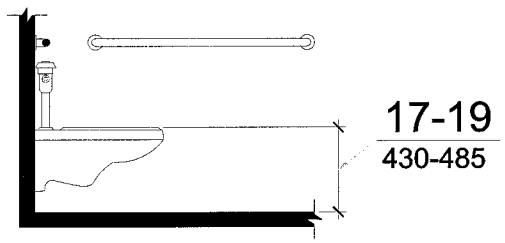

EXCEPTION: This requirement shall not apply to a water closet in a toilet room for a single occupant, accessed only through a private office and not for *common use* or *public use*.

604.5 Grab Bars. Grab bars for water closets shall comply with 609. Grab bars shall be provided on the rear wall and on the side wall closest to the water closet.

EXCEPTION: Grab bars are not required to be installed in a toilet room for a single occupant, accessed only through a private office and not for *common use* or *public use* provided that reinforcement has been installed in walls and located so as to permit the installation of such grab bars.

604.5.1 Side Wall. Side wall grab bar shall be 42 inches (1065 mm) long minimum, located 12 inches (305 mm) maximum from the rear wall and extending 54 inches (1370 mm) minimum from the rear wall.

Figure 604.5.1

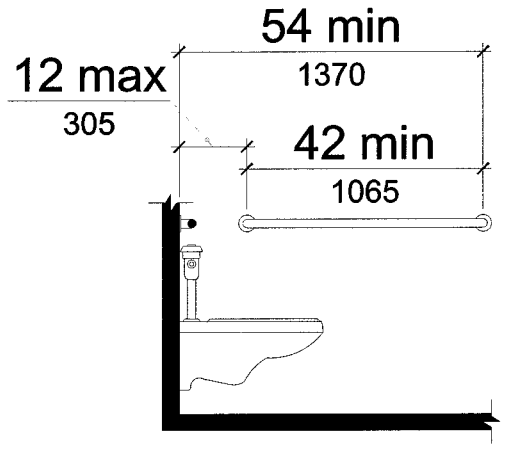

604.5.2 Rear Wall. The rear wall grab bar shall be 24 inches (610 mm) long minimum, centered on the water closet. Where wall *space* permits, the bar shall be 36 inches (915 mm) long minimum with the additional length provided on the transfer side of the water closet.

Figure 604.5.2

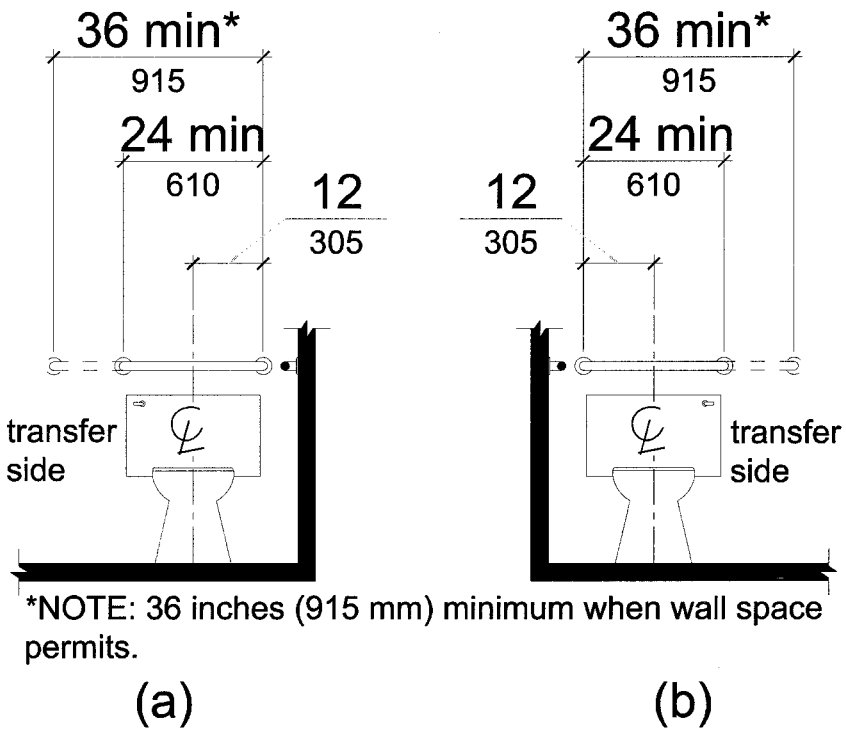

EXCEPTION: If *administrative authorities* require flush controls for flush valves to be located in a position that conflicts with the location of the rear grab bar, then that grab bar may be split or shifted to the open side of the toilet area.

604.6 Flush Controls. Flush controls shall be hand operated or automatic. Hand operated flush controls shall comply with 309.

Advisory 604.6
Flush valves and related plumbing can cause injury or imbalance when a person leans back against them. To prevent this, the plumbing can be located behind walls or to the side of the toilet, or a toilet seat lid can be provided if plumbing valves are directly behind the toilet seat.

604.7 Dispensers. Toilet paper dispensers shall comply with 309.4 and shall be 7 inches (180 mm) minimum and 9 inches (230 mm) maximum in front of the water closet measured to the centerline of the

dispenser. The outlet of the dispenser shall be 15 inches (380 mm) minimum and 48 inches (1220 mm) maximum above the floor. There shall be a clearance of 1 1/2 inches (38 mm) minimum below and 12 inches (305 mm) minimum above the grab bar. Dispensers shall not be of a type that control delivery or that do not allow continuous paper flow.

Figure 604.7

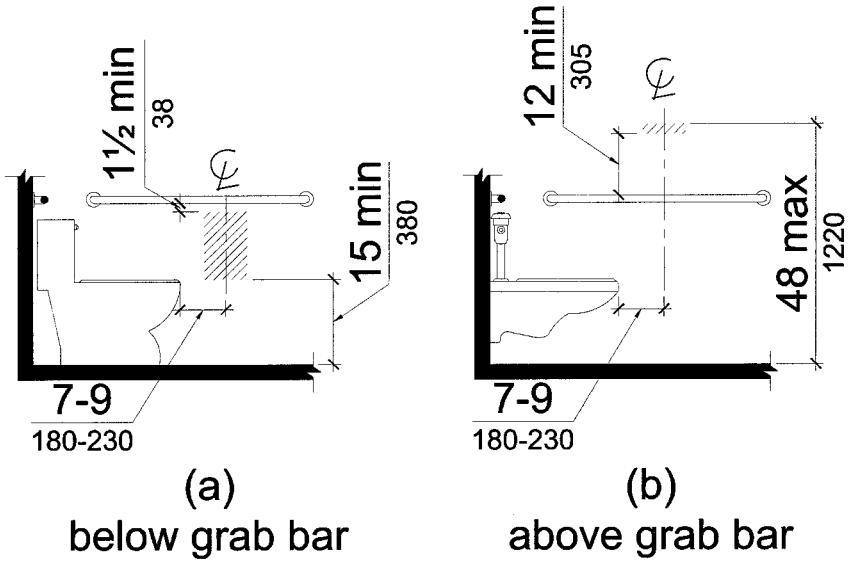

604.8 Toilet Compartments. *Wheelchair accessible* toilet compartments shall meet the requirements of 604.8.1 and 604.8.3. Compartments containing more than one plumbing fixture shall comply with 603. Non-*wheelchair accessible* compartments shall comply with 604.8.2 and 604.8.3.

604.8.1 Wheelchair Accessible Compartments.

604.8.1.1 Size. *Wheelchair accessible* compartments shall be 60 inches (1525 mm) wide minimum measured perpendicular to the side wall, and 56 inches (1420 mm) deep minimum for

wall hung water closets and 59 inches (1500 mm) deep minimum for floor mounted water closets measured perpendicular to the rear wall.

Figure 604.8.1.1

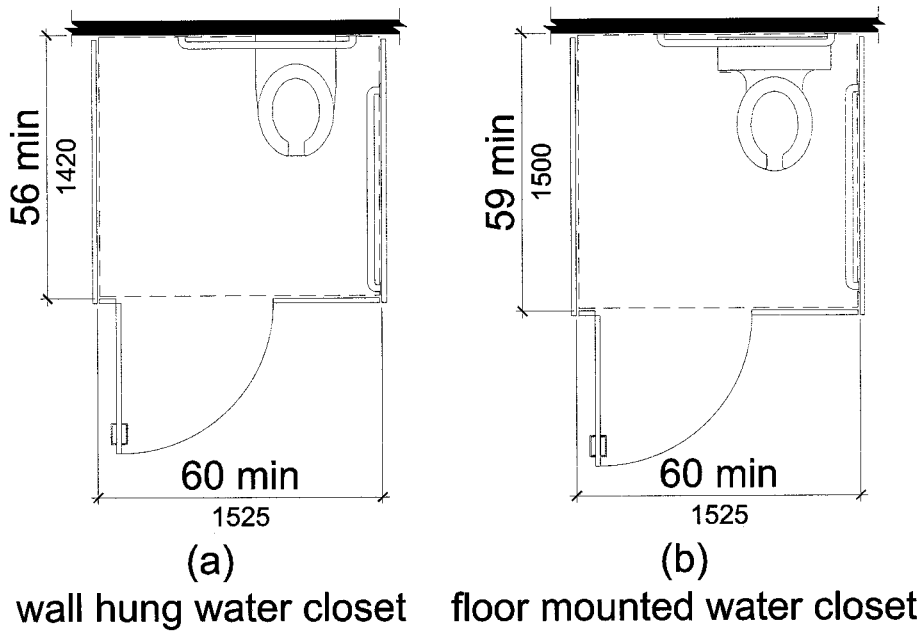

604.8.1.2 Doors. Toilet compartment doors, including door hardware, shall comply with 404 except that if the approach is to the latch side of the compartment door, clearance between the door side of the stall and any obstruction shall be a minimum of 42 inches (1065 mm). The door shall be hinged 4 inches (100 mm) maximum from the side wall or partition farthest from the water closet. The door shall be self-closing. A door pull complying with 404.2.7 shall be placed

on both sides of the door near the latch. Compartment doors shall not swing into the minimum required compartment area.

Figure 604.8.1.2

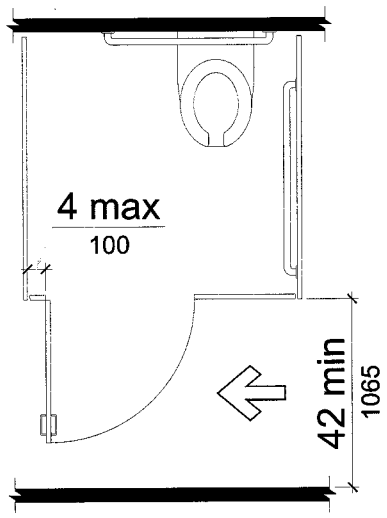

604.8.1.3 Approach. Compartments shall be arranged for left-hand or right-hand approach.

604.8.1.4 Toe Clearance. In *wheelchair accessible* compartments, the front partition and at least one side partition shall provide a toe clearance of 9 inches (230 mm) minimum above the floor and 6 inches (150 mm) deep minimum beyond the compartment-side face of the partition, exclusive of partition support members. Toe clearance at the front partition is not required in a compartment greater than 62 inches (1575 mm) deep with a wall-hung water closet or 65 inches

(1650 mm) deep with a floor-mounted water closet. Toe clearance at the side partition is not required in a compartment greater than 66 inches (1675 mm) wide.

Figure 604.8.1.4

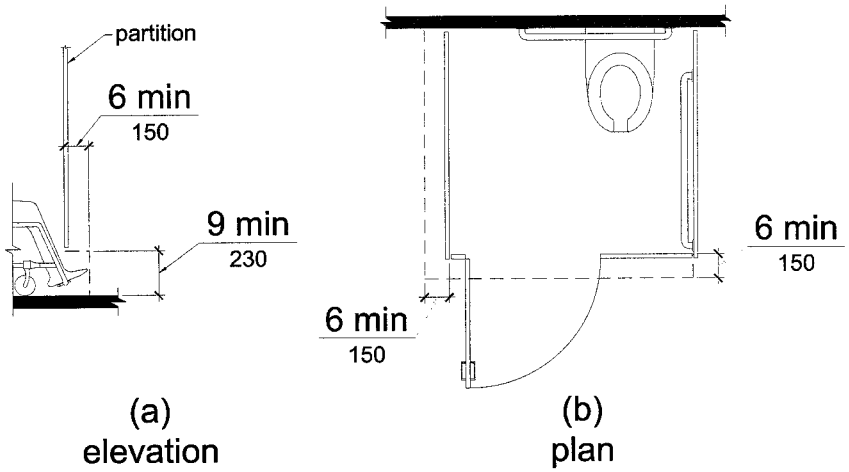

604.8.1.5 Grab Bars. Grab bars shall comply with 609. A side-wall grab bar complying with 604.5.1 located on the wall closest to the water closet and a rear-wall grab bar complying with 604.5.2 shall be provided.

604.8.2 Non-Wheelchair Accessible Compartments.

Figure 604.8.2

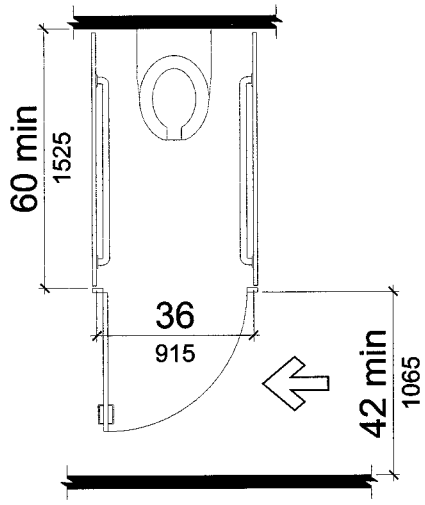

604.8.2.1 Size. Non-*wheelchair accessible* compartments shall be 60 inches (1525 mm) deep minimum and 36 inches (915 mm) wide.

604.8.2.2 Doors. Toilet compartment doors, including door hardware, shall comply with 404 except that if the approach is to the latch side of the compartment door, clearance between the door side of the stall and any obstruction shall be a minimum of 42 inches (1065 mm). The door shall be self-closing. A door pull complying with 404.2.7 shall be placed on both sides of the door near the latch. Compartment doors shall not swing into the minimum required compartment area.

604.8.2.3 Grab Bars. Grab bars shall comply with 609. A side-wall grab bar complying with 604.5.1 shall be provided on both sides of the compartment.

604.8.3 Coat Hooks and Shelves. *Accessible* coat hooks provided within toilet compartments shall be located within one of the reach ranges specified in 308. When provided, a fold-down shelf shall be located 40 inches (1015 mm) minimum and 48 inches (1220 mm) maximum above the floor.

604.9 Water Closets and Toilet Compartments for Children's Use. *Accessible* water closets and toilet compartments for *children's use* shall comply with 604.9.

Advisory 604.9

The requirements in 604.9 are to be followed where the exception for children's water closets in 604.1 is used. The following table provides additional guidance in applying the specifications for water closets for children according to the age group served and reflects the differences in the size, stature, and reach ranges of children ages 3 through 12. The specifications chosen should correspond to the age of the primary user group. The specifications of one age group should be applied consistently in the installation of a water closet and related *elements*.

Specifications for Water Closets Serving Children Ages 3 through 12

	Ages 3 and 4	Ages 5 through 8	Ages 9 through 12
Water Closet Centerline	12 inches (305 mm)	12 to 15 inches (305 to 380 mm)	15 to 18 inches (380 to 455 mm)
Toilet Seat Height	11 to 12 inches (280 to 305 mm)	12 to 15 inches (305 to 380 mm)	15 to 17 inches (380 to 430 mm)
Grab Bar Height	18 to 20 inches (455 to 510 mm)	20 to 25 inches (510 to 635 mm)	25 to 27 inches (635 to 685 mm)
Dispenser Height	14 inches (355 mm)	14 to 17 inches (355 to 430 mm)	17 to 19 inches (430 to 485 mm)

604.9.1 Location. The water closet shall be located with a wall or partition to the rear and to one side. The centerline of the water closet shall be 12 inches (305 mm) minimum to 18 inches (455 mm) maximum from the side wall or partition, except that the water closet shall be centered in the non-wheelchair *accessible* toilet compartment specified in 604.8.2.

604.9.2 Clear Floor Space. Clearance around a water closet shall comply with 604.3.

604.9.3 Height. The height of water closets shall be 11 inches (280 mm) minimum to 17 inches (430 mm) maximum measured to the top of the toilet seat. Seats shall not be sprung to return to a lifted position.

604.9.4 Grab Bars. Grab bars for water closets shall comply with 604.5.

EXCEPTION: If *administrative authorities* require flush controls for flush valves to be located in a position that conflicts with the location of the rear grab bar, then that grab bar may be split or shifted to the open side of the toilet area.

604.9.5 Flush Controls. Flush controls shall be hand operated or automatic. Hand operated flush controls shall comply with 309.2 and 309.4 and shall be installed 36 inches (915 mm) maximum above the floor.

604.9.6 Dispensers. Toilet paper dispensers shall comply with 309.4 and shall be 7 inches (180 mm) minimum and 9 inches (230 mm) maximum in front of the water closet. The outlet of the dispenser shall be 14 inches (355 mm) minimum and 19 inches (485 mm) maximum above the floor. There shall be a clearance of 1 1/2 inches (38 mm) minimum below the grab bar. Dispensers shall not be of a type that control delivery or that do not allow continuous paper flow.

604.9.7 Toilet Compartments. *Accessible* toilet compartments shall meet the requirements of 604.9.7. Compartments containing more than one plumbing fixture shall comply with 603.

604.9.7.1 Wheelchair Accessible Compartments.

604.9.7.1.1 Size. *Wheelchair accessible* compartments shall be 60 inches (1525 mm) wide minimum measured perpendicular to the side wall, and 59 inches (1500 mm) deep minimum measured perpendicular to the rear wall.

604.9.7.1.2 Doors. Toilet compartment doors, including door hardware, shall comply with 404 except that if the approach is to the latch side of the compartment door, clearance between the door side of the stall and any obstruction shall be a minimum of 42 inches (1065 mm). The door shall be hinged 4 inches (100 mm) maximum from the side wall or partition farthest from the water closet. The door shall be self-closing. A door pull complying with 404.2.7 shall be placed on both sides of the door near the latch. Compartment doors shall not swing into the minimum required compartment area.

604.9.7.1.3 Approach. Compartments shall be arranged for left-hand, or for right-hand approach.

604.9.7.1.4 Toe Clearance. In *wheelchair accessible* compartments, the front partition and at least one side partition shall provide a toe clearance of 12 inches (305 mm) minimum above the floor and 6 inches (150 mm) deep minimum beyond the compartment-side face of the partition, exclusive of partition support members.

604.9.7.1.5 Grab Bars. Grab bars shall comply with 609. A side-wall grab bar complying with 604.5.1 located on the wall closest to the water closet and a rear-wall grab bar complying with 604.5.2 shall be provided.

604.9.7.2 Non-Wheelchair Accessible Compartments. Non-wheelchair *accessible* compartments shall comply with 604.8.2.

605 Urinals

605.1 General. Urinals required to be *accessible* shall comply with 605.

605.2 Height and Depth. Urinals shall be the wall-hung type with the rim 17 inches (430 mm) maximum above the floor or ground or the stall-type. Urinals shall provide a minimum depth of 13 1/2 inches (345 mm) measured from the outer face of the urinal rim to the back of the fixture.

Figure 605.2

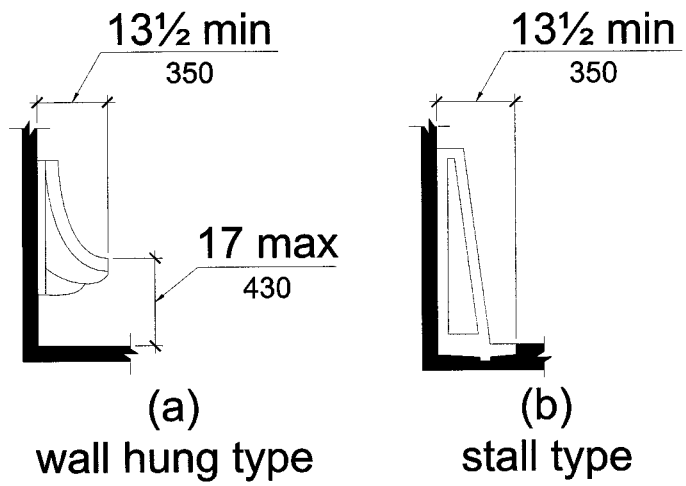

605.3 Clear Floor Space. A clear floor or ground *space* complying with 305 positioned for forward approach shall be provided. This clear *space* shall adjoin or overlap an *accessible route*.

605.4 Flush Controls. Flush controls shall be hand operated or automatic. Hand operated flush controls shall comply with 309.4 and shall be 44 inches (1120 mm) maximum above the floor or ground.

Figure 605.4

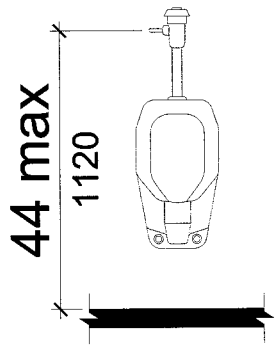

606 Lavatories and Sinks

606.1 General. Sinks, lavatory fixtures, vanities and lavatories required to be *accessible* shall comply with 606.

Advisory 606.1

If soap and towel dispensers are provided, they must be located within the reach ranges specified in 308 and should be usable by a person at the *accessible* lavatory.

606.2 Clear Floor Space. A clear floor *space* complying with 305, positioned for forward approach, and knee and toe clearance complying with 306 shall be provided.

EXCEPTIONS: 1. The dip of the overflow shall not be considered in determining knee and toe clearances.
2. The requirement for knee and toe clearance shall not apply to a lavatory in a toilet and bathing *facility* for a single occupant, accessed only through a private office and not for *common use* or *public use*.
3. The requirement for knee and toe clearance shall not apply to more than one bowl of a multi-bowl sink.
4. A knee clearance of 24 inches (610 mm) minimum above the floor or ground shall be permitted at lavatories and sinks used primarily by children ages 6 through 12 where the rim or counter surface is 31 inches (760 mm) maximum above the floor or ground.
5. A parallel approach shall be permitted in lieu of a forward approach to lavatories and sinks used primarily by children ages 5 and younger.

606.3 Height. Lavatories and sinks shall be installed with the front of the higher of the rim or counter surface 34 inches (865 mm) maximum above the finish floor.

Figure 606.3

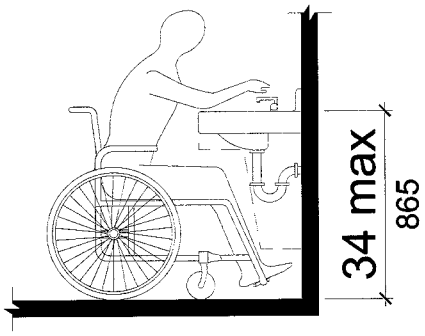

EXCEPTION: This requirement shall not apply to a lavatory in a toilet and bathing *facility* for a single occupant, accessed only through a private office and not for *common use* or *public use*.

606.4 Faucets. Faucets shall comply with 309. Hand-operated, self-closing faucets shall remain open for 10 seconds minimum.

606.5 Exposed Pipes and Surfaces. Water supply and drain pipes under lavatories and sinks shall be insulated or otherwise configured to protect against contact. There shall be no sharp or abrasive surfaces under lavatories and sinks.

607 Bathtubs

607.1 General. Bathtubs required to be *accessible* shall comply with 607.

607.2 Clear Floor Space. Clearance in front of bathtubs shall extend the length of the tub and shall be 30 inches (760 mm) wide minimum. A lavatory complying with 606 shall be permitted at the foot end of

the clear floor *space*. Where a permanent seat is provided at the head end of the tub, the clear floor *space* shall extend a minimum of 12 inches (305 mm) beyond the seat.

Figure 607.2

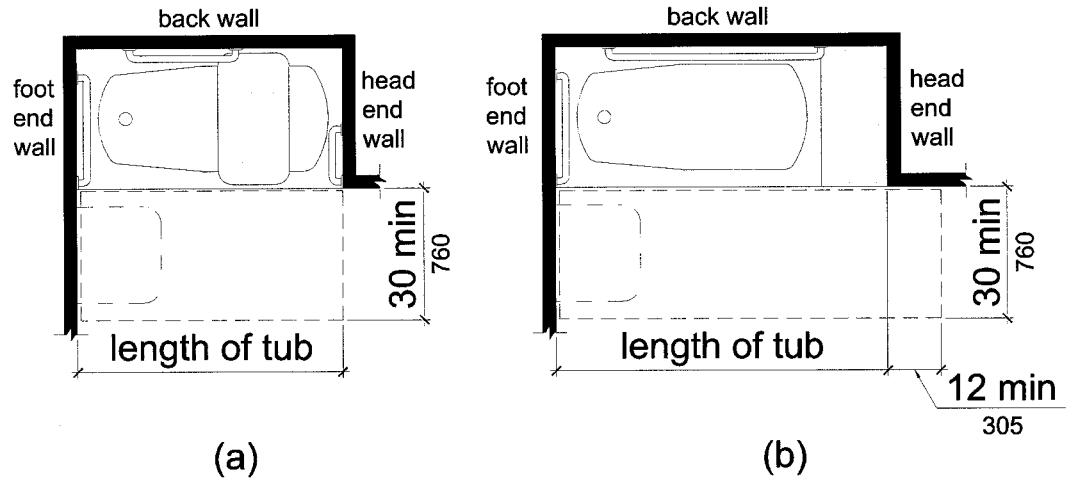

607.3 Seat. A permanent seat at the head end of the tub or a removable in-tub seat shall be provided. Seats shall comply with 610.

607.4 Grab Bars. Grab bars for bathtubs shall comply with 609 and shall be provided in accordance with 607.4.1 and 607.4.2.

Figure 607.4

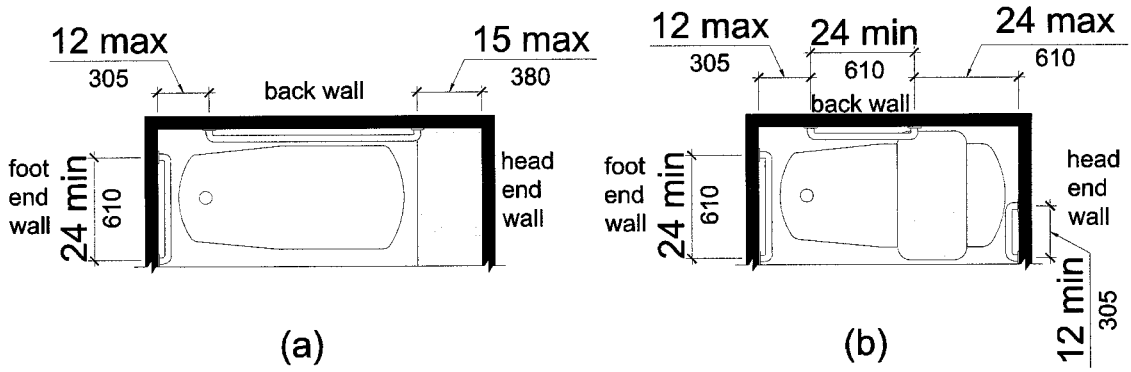

EXCEPTION: Grab bars are not required to be installed in a bathing *facility* for a single occupant accessed only through a private office and not for *common use* or *public use*, provided that

reinforcement has been installed in walls and located so as to permit the installation of such grab bars.

607.4.1 Bathtubs With Permanent Seats. For bathtubs with permanent seats, grab bars shall be provided in accordance with 607.4.1.

607.4.1.1 Back Wall. Two grab bars shall be installed on the back wall, one located in accordance with 609.3 and the other located 9 inches (230 mm) above the rim of the tub. Each grab bar shall be installed 15 inches (380 mm) maximum from the head end wall and 12 inches (305 mm) maximum from the foot end wall.

Figure 607.4.1.1

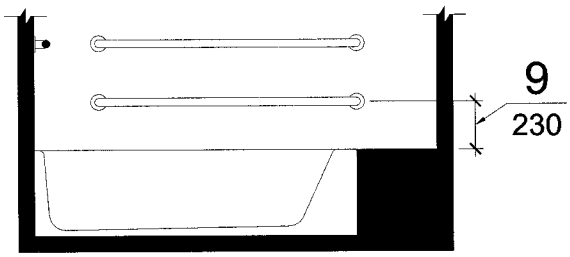

607.4.1.2 Foot End Wall. A grab bar 24 inches (610 mm) long minimum shall be installed on the foot end wall at the front edge of the tub.

607.4.2 Bathtubs Without Permanent Seats. For bathtubs without permanent seats, grab bars shall comply with 607.4.

607.4.2.1 Back Wall. Two grab bars shall be installed on the back wall, one located in accordance with 609.3 and other located 9 inches (230 mm) above the rim of the tub. Each grab bar shall be 24 inches (610 mm) long minimum and shall be installed 24 inches (610 mm) maximum from the head end wall and 12 inches (305 mm) maximum from the foot end wall.

Figure 607.4.2.1

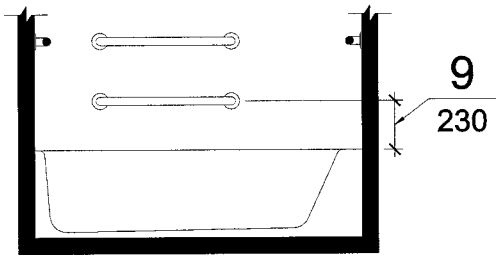

607.4.2.2 Foot End Wall. A grab bar 24 inches (610 mm) long minimum shall be installed on the foot end wall at the front edge of the tub.

607.4.2.3 Head End Wall. A grab bar 12 inches (305 mm) long minimum shall be installed on the head end wall at the front edge of the tub.

607.5 Operable Parts. *Operable parts*, other than drain stoppers, shall be located on an end wall above the tub rim and below the grab bars, and between the front edge of the tub and the mid-point of the width of the tub. *Operable parts* shall comply with 309.4.

Figure 607.5

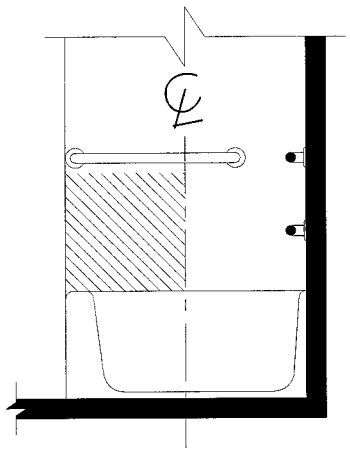

607.6 Shower Spray Unit and Water. A shower spray unit with a hose 59 inches (1500 mm) long minimum that can be used both as a fixed shower head and as a hand-held shower shall be provided. The shower spray unit shall have a water-on and water-off control. If an adjustable-height shower head on a vertical bar is used, the bar shall be installed so as not to obstruct the use of grab bars. Bathtub/shower spray units shall deliver water that is thermal shock protected to 120°F maximum.

607.7 Bathtub Enclosures. Enclosures for bathtubs shall not obstruct *operable parts* or transfer from *wheelchairs* onto bathtub seats or into tubs. Enclosures on bathtubs shall not have tracks installed on the rim of the open face of the tub.

608 Shower Compartments

608.1 General. Shower compartments required to be *accessible* shall comply with 608.

Advisory 608.1
Shower stalls that are 60 inches (1525 mm) wide and have no curb may increase the usability of a bathroom because the shower area provides additional maneuvering *space.*

608.2 Size and Clearances for Shower Compartments.

608.2.1 Transfer Type Shower Compartments. Transfer-type shower compartments shall be 36 inches (915 mm) by 36 inches (915 mm) inside finished dimension measured at the centerpoint of opposing sides and shall have a minimum 36 inch (915 mm) wide entry on the face of the shower compartment. Clear floor *space* of 36 inches (915 mm) wide minimum by 48 inches (1220 mm) long minimum measured from the control wall shall be provided.

Figure 608.2.1

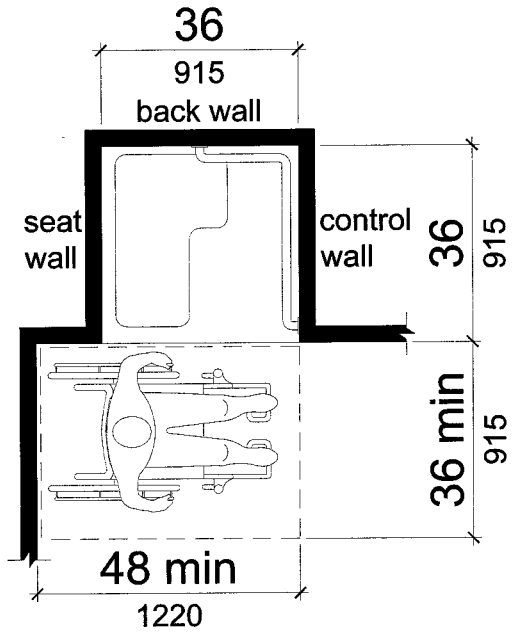

608.2.2 Standard Roll-In Type Shower Compartment. Standard roll-in type shower compartments shall be 30 inches (760 mm) minimum by 60 inches (1525 mm) minimum clear inside dimension measured at the centerpoint of opposing sides and shall have a minimum 60 inches (1525 mm) wide entry on the face of the shower compartment. A 30 inch (760 mm) wide minimum by 60 inch (1525 mm) long minimum clear floor *space* shall be provided adjacent to the open face of the shower compartment. A lavatory complying with 606 shall be permitted at the end of the clear *space,*

opposite the shower compartment end where the seat is installed and opposite the shower compartment side where shower controls are located.

Figure 608.2.2

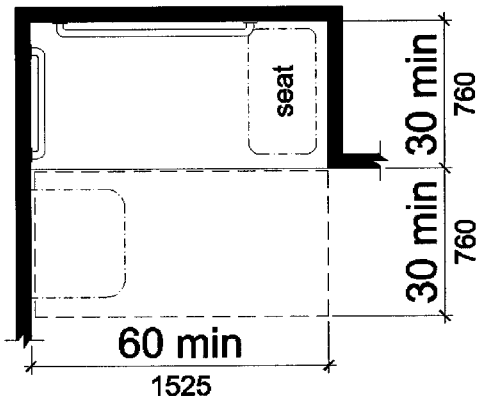

608.2.3 Alternate Roll-In Type Shower Compartment. Alternate roll-in shower compartments shall be 36 inches (915 mm) in width and 60 inches (1220 mm) minimum in depth. A 36 inch (915 mm) wide minimum entry shall be provided on one side of the stall.

Figure 608.2.3

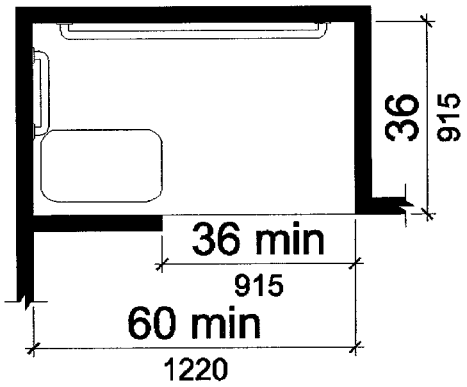

608.3 Grab Bars. Grab bars shall comply with 609 and shall be provided in accordance with 608.3. Where multiple grab bars are used, they shall be installed at the same height.

EXCEPTION: Grab bars are not required to be installed in a shower *facility* for a single occupant, accessed only through a private office and not for *common use* or *public use* provided that reinforcement has been installed in walls and located so as to permit the installation of such grab bars.

608.3.1 Transfer Type Showers. Grab bars shall be extended across the control wall and back wall to a point 18 inches (455 mm) from the control wall.

Figure 608.3.1

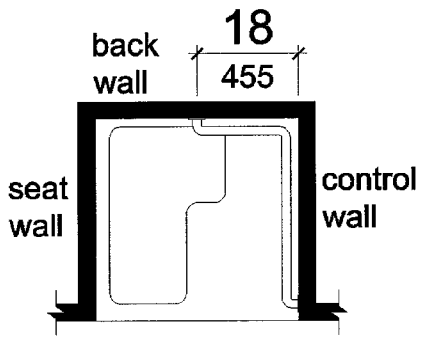

608.3.2 Roll-In Type Showers. Grab bars shall be provided on the three walls of the shower. Grab bars shall be installed 6 inches (150 mm) maximum from the adjacent wall.

EXCEPTIONS: 1. Where a seat is provided in a roll-in type shower, grab bars shall not extend over the seat at the control wall and shall not be located behind the seat.

2. In alternate roll-in type showers, grab bars shall not be required on the side wall opposite the control wall and shall not be located behind the seat.

Figure 608.3.2

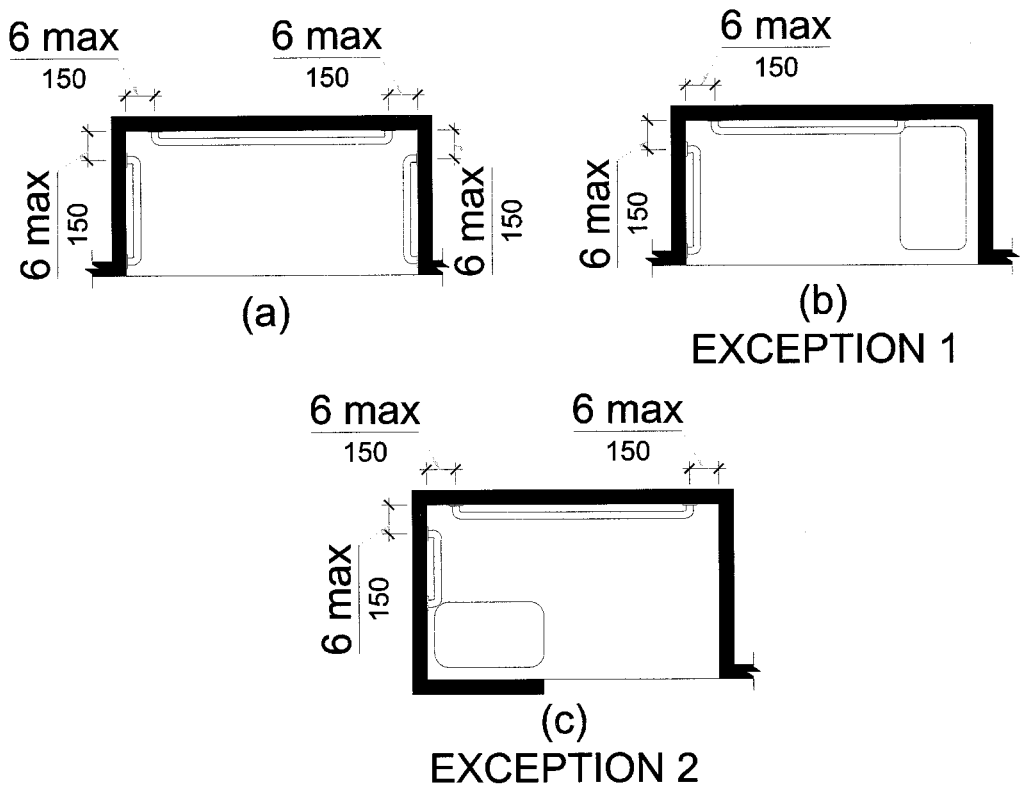

608.4 Seats. An attachable or integral seat shall be provided in transfer-type shower compartments. A folding seat shall be provided in roll-in showers used in *accessible transient lodging* guest rooms. Seats shall comply with 610.

608.5 Operable Parts. Controls and faucets shall comply with 309.4.

608.5.1 Transfer Type Showers. In transfer-type shower compartments controls, faucets, and the shower spray unit shall be installed on the side wall opposite the seat 38 inches (965 mm) minimum

to 48 inches (1220 mm) maximum above the shower floor and shall be located on the control wall 15 inches (380 mm) maximum left or right of the centerline of the seat.

Figure 608.5.1

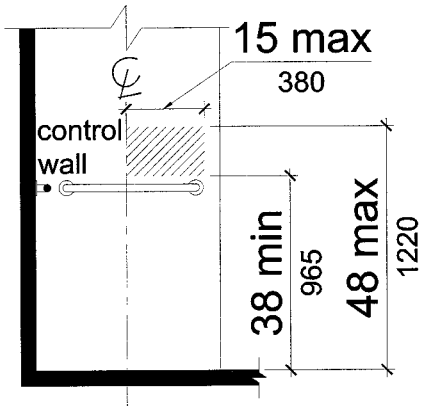

608.5.2 Roll-in Type Shower. Controls in roll-in type shower compartments shall be located above the grab bar but no higher than 48 inches (1220 mm) above the shower floor. In roll-in type shower compartments with seats, the controls, faucets, and the shower spray unit shall be installed on the wall adjacent to the seat wall and shall be located 27 inches (685 mm) maximum from the seat wall. In alternate roll-in type shower compartments, the shower unit and controls shall be installed on the end wall furthest from the compartment entry.

Figure 608.5.2

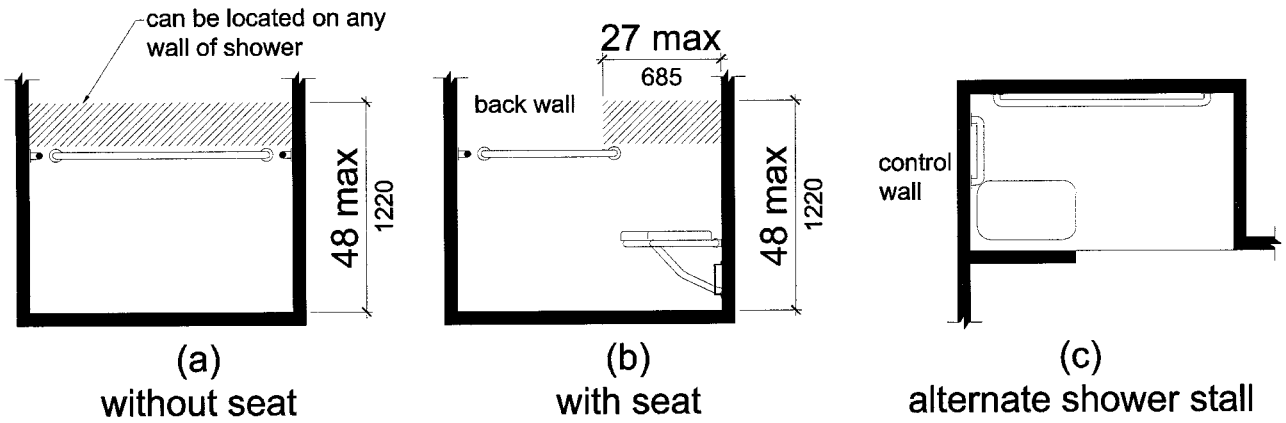

Advisory 608.5.2

In roll-in showers without seats, the shower head and *operable parts* can be located on any of the three walls of the shower without adversely affecting accessibility.

608.6 Shower Spray Unit and Water. A shower spray unit with a hose 59 inches (1500 mm) long minimum that can be used both as a fixed shower head and as a hand-held shower shall be provided. The shower spray unit shall have a water-on and water-off control. If an adjustable-height shower head on a vertical bar is used, the bar shall be installed so as not to obstruct the use of grab bars. Shower spray units shall deliver water that is thermal shock protected to 120°F maximum.

608.7 Curbs. Thresholds in shower compartments shall be 1/2 inch (13 mm) high maximum in accordance with 303.

608.8 Shower Enclosures. Enclosures for shower compartments shall not obstruct *operable parts* or obstruct transfer from *wheelchairs* onto shower seats.

609 Grab Bars

609.1 General. Grab bars in *accessible* toilet *facilities* and bathing *facilities* shall comply with 609.

609.2 Size and Spacing of Grab Bars. The diameter of grab bars shall be 1-1/4 inches (32 mm) minimum to 1-1/2 inches (38 mm) maximum. If not round, the shape shall provide equivalent graspability with a maximum cross-section dimension of 2 inches (51 mm) and perimeter dimension of 4 inches (100 mm) minimum and 4-11/16 inches (120 mm) maximum and with edges having a 1/8-inch (3.2 mm) minimum radius. The *space* between the wall and the grab bar shall be 1-1/2 inches (38 mm). The *space* between the grab bar and projecting objects above shall be 15 inches (380 mm) minimum.

Figure 609.2

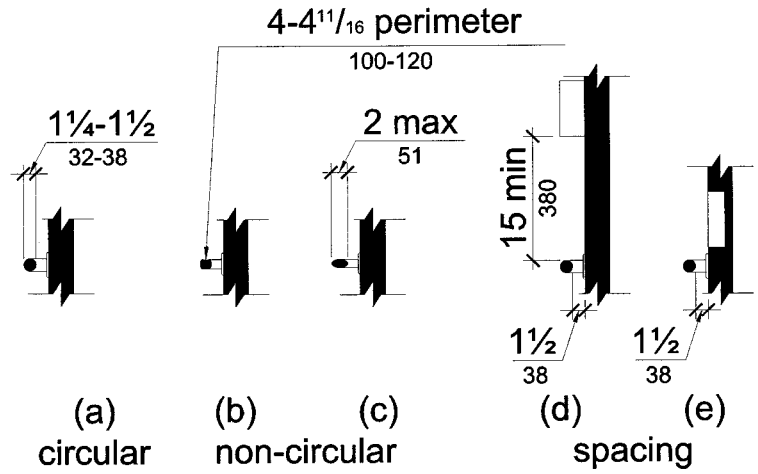

EXCEPTION: The *space* between the grab bars and shower controls, shower fittings, and other grab bars above shall be 1-1/2 inches (38 mm) minimum.

609.3 Position of Grab Bars. Grab bars shall be installed in a horizontal position, 33 inches (840 mm) minimum to 36 inches (915 mm) maximum above the floor, except that at water closets for *children's use* complying with 604.9, grab bars shall be installed in a horizontal position 18 inches (455 mm) minimum to 27 inches (685 mm) maximum above the floor.

Figure 609.3

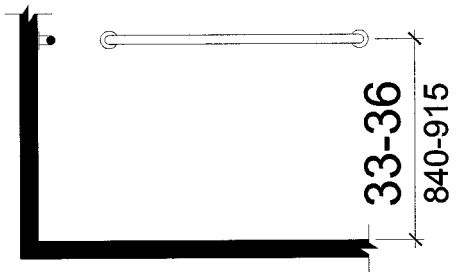

609.4 Surface Hazards. Grab bars and any wall or other surfaces adjacent to grab bars shall be free of sharp or abrasive *elements*. Edges shall have a radius of 1/8 inch (3.2 mm) minimum.

609.5 Fittings. Grab bars shall not rotate within their fittings.

609.6 Installation. Grab bars shall be installed in any manner that provides a gripping surface at the locations specified in this standard and that does not obstruct the required clear floor *space*.

609.7 Structural Strength. Allowable stresses shall not be exceeded for materials used when a vertical or horizontal force of 250 lb (1112 N) is applied at any point on the grab bar, fastener, mounting device, or supporting structure.

610 Seats

610.1 General. Seats in *accessible* bathtubs and shower compartments shall comply with 610.

610.2 Bathtub Seats. The depth of a removable in-tub seat shall be 15 inches (380 mm) minimum to 16 inches (405 mm) maximum. The seat shall be capable of secure placement. The depth of a permanent

seat at the head end of the bathtub shall be 15 inches (380 mm) minimum. The top of bathtub seats shall be 17 inches (430 mm) minimum to 19 inches (485 mm) maximum above the bathroom floor.

Figure 610.2

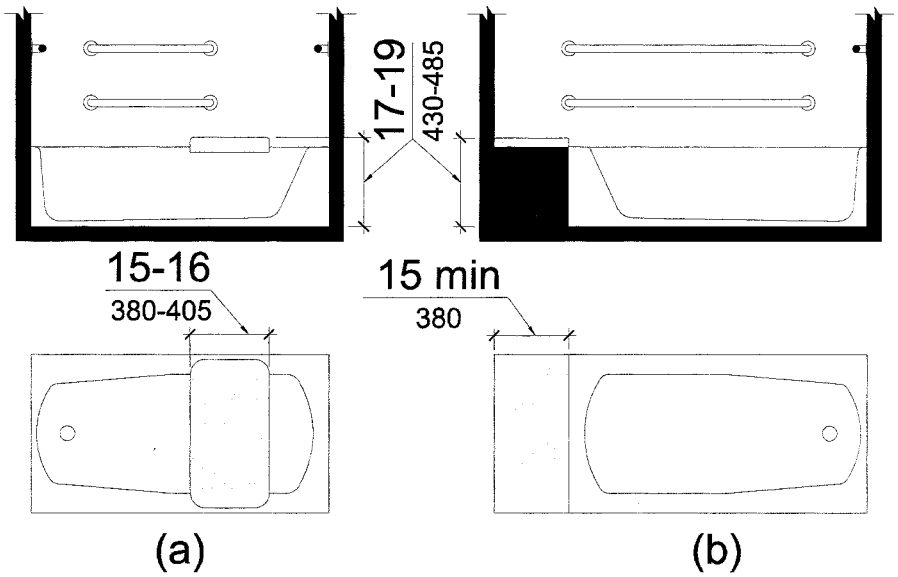

610.3 Shower Compartment Seats. Where a seat is provided in a roll-in shower compartment, it shall be a folding type and shall be installed on the wall adjacent to the controls. Seats shall be L-shaped or rectangular. The top of the seat shall be 17 inches (430 mm) minimum to 19 inches (485 mm) maximum above the bathroom floor. In transfer-type showers, the seat shall extend from the back wall to a point within 3 inches (75 mm) of the compartment entry. In roll-in-type showers, the seat shall be located adjacent to the compartment entry and shall extend from the control wall to a point within 3 inches (75 mm) of the compartment entry.

Figure 610.3

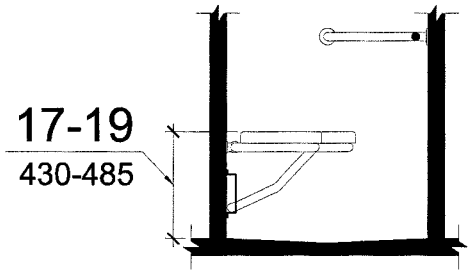

610.3.1 Rectangular Seats. The rear edge of a rectangular seat shall be 2 1/2 inches (64 mm) maximum and the front edge 15 inches (380 mm) minimum to 16 inches (405 mm) maximum from the seat wall. The side edge of the seat shall be 1-1/2 inches (38 mm) maximum from the back wall of a transfer-type shower and 1-1/2 inches (38 mm) maximum from the control wall of a roll-in-type shower.

Figure 610.3.1

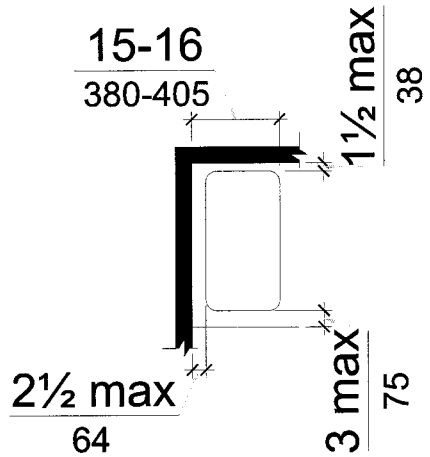

610.3.2 L-shaped Seats. The rear edge of an L-shaped seat shall be 2 1/2 inches (64 mm) maximum and the front edge 15 inches (380 mm) minimum to 16 inches (405 mm) maximum from the seat wall. The rear edge of the "L" portion of the seat shall be 1 1/2 inches (38 mm) maximum from the wall and the front edge shall be 14 inches (355 mm) minimum to 15 inches (380 mm)

maximum from the wall. The end of the "L" shall be 22 inches (560 mm) minimum to 23 inches maximum (585 mm) from the main seat wall.

Figure 610.3.2

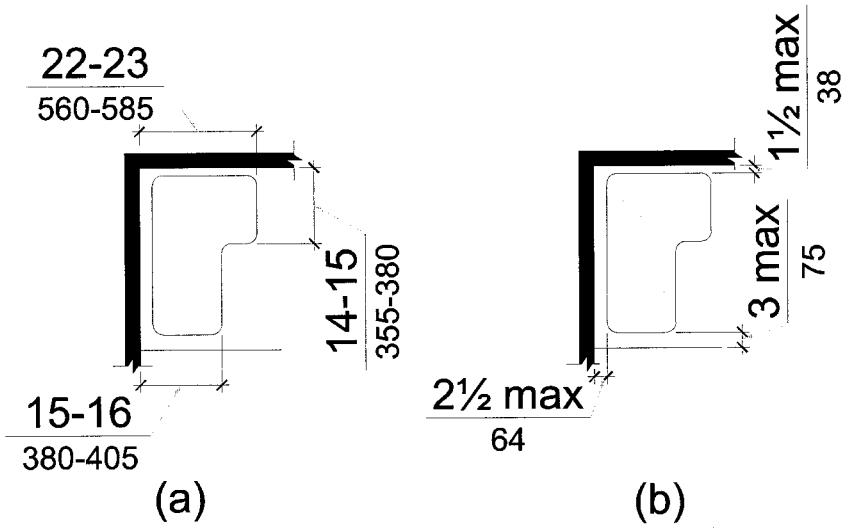

610.4 Structural Strength. Allowable stresses shall not be exceeded for materials used when a vertical or horizontal force of 250 lb (1112 N) is applied at any point on the seat, fastener, mounting device, or supporting structure.

611 Laundry Equipment

611.1 General. Washing machines and clothes dryers required to be *accessible* shall comply with 611.

611.2 Clear Floor Space. A clear floor or ground *space* complying with 305 positioned for parallel approach shall be provided. The clear floor or ground *space* shall be centered on the appliance.

611.3 Operable Parts. *Operable parts* including doors, lint screens, detergent and bleach compartments shall comply with 309.

611.4 Height. Top loading machines shall have the door to the laundry compartment located 34 inches (865 mm) maximum above the floor. Front loading machines shall have the bottom of the opening to the

laundry compartment located 15 inches (380 mm) minimum and 34 inches (865 mm) maximum above the floor.

Figure 611.4

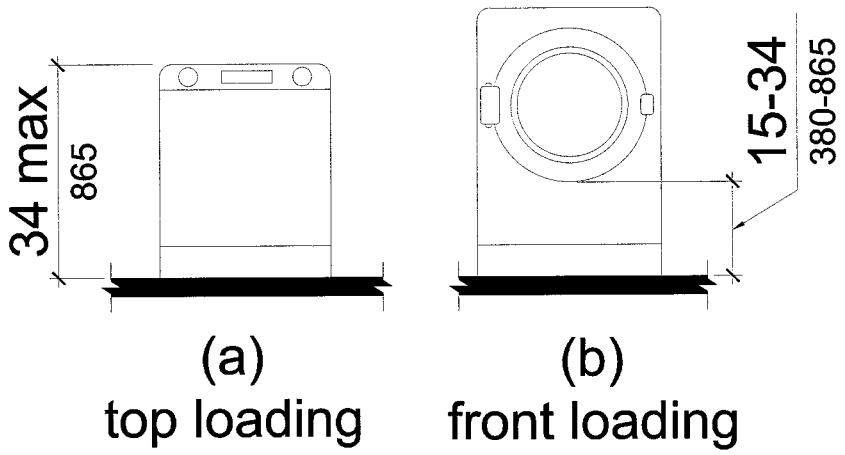

CHAPTER 7: COMMUNICATION ELEMENTS AND FEATURES

701 General

701.1 Scope. Communications features and *elements* required to be *accessible* by Chapter 2 shall comply with the applicable provisions of this chapter.

702 Fire Alarm Systems

702.1 General. Fire alarm systems required to be *accessible* shall have audible alarms complying with 702.2 and visual alarms complying with 702.3.

EXCEPTION: Fire alarm systems in medical care *facilities* shall be permitted to be modified to suit standard health care alarm practice.

702.2 Audible Alarms. Audible alarms shall produce a sound that exceeds the prevailing equivalent sound level in the room or *space* by 15 dBA minimum or exceeds any maximum sound level with a duration of 60 seconds by 5 dBA, whichever is louder. Sound levels for alarm signals shall not exceed 110 dBA.

702.3 Visual Alarms. Visual alarms shall comply with 702.3.

702.3.1 Light Pulse Characteristics.

702.3.1.1 Type. The lamp shall be a xenon strobe type or equivalent.

702.3.1.2 Color. The color shall be clear or nominal white.

702.3.1.3 Flash Rate. The flash rate for an individual appliance shall be 1 Hz minimum and 2 Hz maximum over its rated voltage range.

Advisory 702.3.1.3
Flash rates that exceed five flashes per second may be disturbing to persons with a photosensitivity, particularly those with certain forms of epilepsy. Multiple, unsynchronized visual signals within a single *space* may produce a composite flash rate that could trigger a photoconvulsive response in such persons. Therefore, installations that may produce a composite rate in excess of 5 Hz should be avoided by decreasing the number of fixtures and raising the intensity of lamps they contain, by decreasing the flash rate of multiple lamps, or by synchronizing the flash rates of multiple fixtures.

702.3.1.4 Pulse Duration. The maximum pulse duration shall be two-tenths of one second with a maximum duty cycle of 40 percent. The pulse duration is defined as the time interval between initial and final points of 10 percent of maximum signal.

702.3.2 Dispersion. Light dispersion of wall installed appliances shall comply with Table 702.3.2.1. Light dispersion of ceiling installed appliances shall comply with Table 702.3.2.2.

Table 702.3.2.1 Light Dispersion for Wall-Installed Visual Alarm Appliances

Vertical Dispersion		Horizontal Dispersion	
Degrees from Horizontal	Percent of Rated	Degrees from Vertical	Percent of Rated
0	100	0	100
5 to 30	90	5 to 25	90
35	65	30 to 45	75
40	46	50	55
45	34	55	45
50	27	60	40
55	22	65	35
60	18	70	35
65	16	75	30
70	15	80	30
75	13	85	25
80	12	90	25
85	12		
90	12		

Table 702.3.2.2 Light Dispersion for Ceiling-Installed Visual Alarm Appliances

Degrees from Vertical	Percent of Rated
0	100
5 to 25	90
30 to 45	75

Table 702.3.2.2 Light Dispersion for Ceiling-Installed Visual Alarm Appliances

Degrees from Vertical	Percent of Rated
50	55
55	45
60	40
65	35
70	35
75	30
80	30
85	25
90	25

702.3.3 Location. Appliances shall be located in accordance with 702.3.3.1 or 702.3.3.2.

EXCEPTION: Appliances in guest rooms shall comply with 702.3.6.

702.3.3.1 Wall Installed Appliances. Appliances shall be located 80 inches (2030 mm) minimum and 96 inches (2440 mm) maximum above the finished floor or ground measured to the bottom of the appliance.

Figure 702.3.3.1

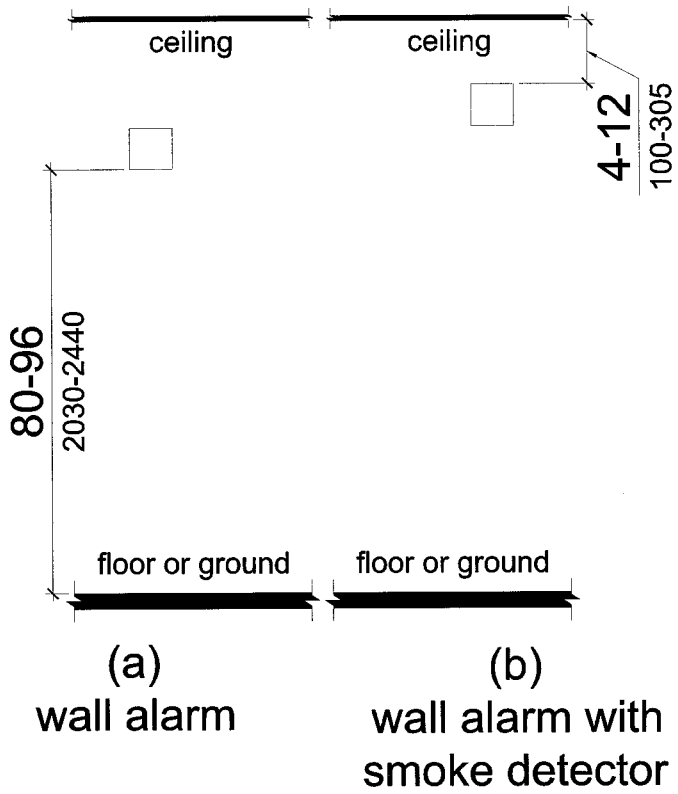

EXCEPTION: Wall installed appliances which are part of a smoke detector shall be located 4 inches (100 mm) minimum and 12 inches (305 mm) maximum below the ceiling measured to the top of the smoke detector.

702.3.3.2 Ceiling-Installed Appliances. Appliances shall be on the ceiling. Where ceiling height exceeds 30 feet (9140 mm), appliances shall be suspended from the ceiling to a height of 30 feet (9140 mm) maximum above the finished floor or ground.

Figure 702.3.3.2

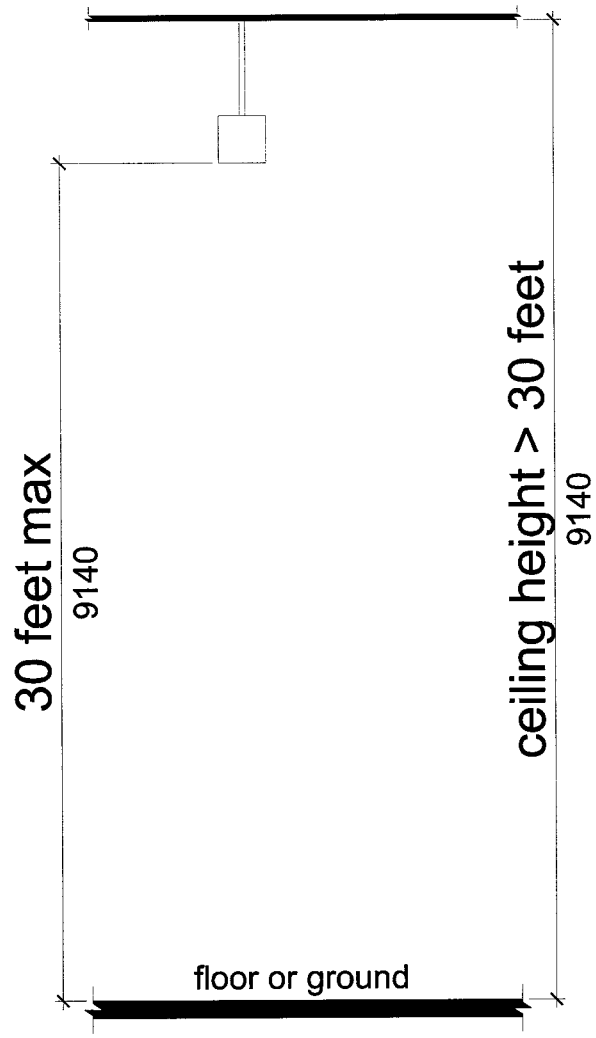

702.3.4 Spacing Allocation and Minimum Intensity. Spacing and minimum effective intensity for appliances shall comply with 702.3.4.

EXCEPTIONS: 1. Appliances in corridors not more than 20 feet (6100 mm) in width shall comply with 702.3.5.
2. Appliances in guest rooms shall comply with 702.3.6.

702.3.4.1 General. The signal provided by the appliance or appliances shall be visible either by direct view or by reflection from all parts of the covered area. Multiple appliances within an area are permitted only where size, shape, *building* construction or furnishings prohibit total coverage by a single appliance. Where multiple appliances are provided in a single area to provide total area coverage, the appliances shall comply with one of the following: a maximum of two appliances located on opposite walls; the appliances shall have synchronized flashes; or, in rooms 80 feet (24 m) by 80 feet (24 m) or greater in size, more than two appliances located such that all appliances in any 135-degree field of view are spaced a minimum of 55 feet (17 m) from each other.

702.3.4.2 Wall Installed Appliances. Spacing and minimum effective intensity for wall installed appliances shall be in accordance with Table 702.3.4.2 provided the appliance is located at the midpoint of the longest side of the area served. Where the appliance is not located at the midpoint, the minimum effective intensity shall be based on a maximum area of coverage equal to the distance to the opposite side of the area served or double the distance to the farthest adjacent side of the area served, whichever is greater.

Table 702.3.4.2 Spacing Allocation for Wall-Installed Visual Alarm Appliances

Maximum Area of Coverage in Feet	Minimum Required Light Output (Effective Intensity) (candela)		
	One Light per Area	Two Lights per Area	Four Lights per Area
20 X 20 (6100 X 6100 mm)	15	Not Permitted	Not Permitted
30 X 30 (9140 X 9140 mm)	30	15	Not Permitted
40 X 40 (12 X 12 m)	60	30	Not Permitted
50 X 50 (15 X 15 m)	95	60	Not Permitted
60 X 60 (18 X 18 m)	135	95	Not Permitted
70 X 70 (21 X 21 m)	185	95	Not Permitted
80 X 80 (24 X 24 m)	240	135	60
90 X 90 (27 X 27 m)	305	185	95

Table 702.3.4.2 Spacing Allocation for Wall-Installed Visual Alarm Appliances

Maximum Area of Coverage in Feet	Minimum Required Light Output (Effective Intensity) (candela)		
	One Light per Area	Two Lights per Area	Four Lights per Area
100 X 100 (30 X 30 m)	375	240	95
110 X 110 (34 X 34 m)	455	240	135
120 X 120 (37 X 37 m)	540	305	135
130 X 130 (40 X 40 m)	635	375	185

702.3.4.3 Ceiling Installed Appliances. Spacing and minimum effective intensity for ceiling installed appliances shall be in accordance with Table 702.3.4.3 provided the appliance is located at the centerpoint of the area served. Where the appliance is not located at the centerpoint, the minimum effective intensity shall be based on a maximum area of coverage equal to two times the distance from the appliance to the farthest side of the area served.

Table 702.3.4.3 Spacing Allocation for Ceiling-Installed Visual Alarm Appliances

Maximum Area of Coverage in Feet	Minimum Required Light Output (Effective Intensity) (candela)	
	Maximum Ceiling Height in Feet	One Light
20 X 20 (6100 X 6100 mm)	10 (3050 mm)	15
30 X 30 (9140 X 9140 mm)	10 (3050 mm)	30
40 X 40 (12 X 12 m)	10 (3050 mm)	60
50 X 50 (15 X 15 m)	10 (3050 mm)	95
20 X 20 (6100 X 6100 mm)	20 (6100 mm)	30
30 X 30 (9140 X 9140 mm)	20 (6100 mm)	45
40 X 40 (12 X 12 m)	20 (6100 mm)	80
50 X 50 (15 X 15 m)	20 (6100 mm)	115
20 X 20 (6100 X 6100 mm)	30 (9140 mm)	55
30 X 30 (9140 X 9140 mm)	30 (9140 mm)	75

Table 702.3.4.3 Spacing Allocation for Ceiling-Installed Visual Alarm Appliances

Maximum Area of Coverage in Feet	Minimum Required Light Output (Effective Intensity) (candela)	
	Maximum Ceiling Height in Feet	One Light
40 X 40 (12 X 12 m)	30 (9140 mm)	115
50 X 50 (15 X 15 m)	30 (9140 mm)	150

702.3.5 Corridor Spacing Allocation and Minimum Intensity. Appliances in corridors that are 20 feet (6100 mm) maximum in width shall comply with 702.3.5. Corridors exceeding 20 feet (6100 mm) in width shall comply with 702.3.4.

Figure 702.3.5

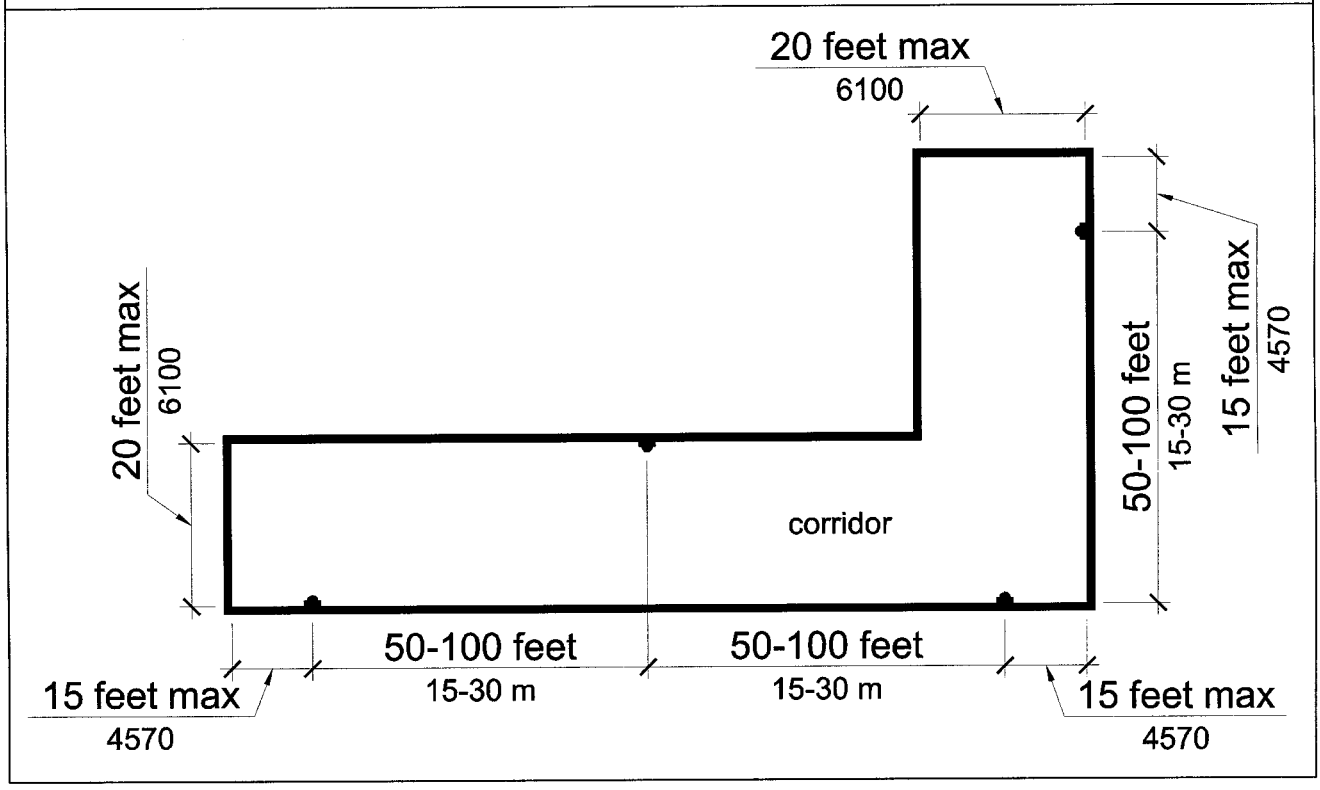

702.3.5.1 Appliance Spacing. Appliances shall be located 15 feet (4570 mm) maximum from each end of the corridor and shall be located 50 feet (15 m) minimum and 100 feet (30 m) maximum apart along the corridor. Interruptions to the concentrated viewing path by doors, elevation changes or other obstructions shall constitute the end of a corridor for purposes of this section.

702.3.5.2 Minimum Effective Intensity. Appliances shall have a minimum effective intensity of 15 candela.

702.3.6 Guest Rooms. Guest rooms required to have visual alarms shall comply with 702.3.6.

702.3.6.1 Activation. Where single or multiple-station smoke detectors are provided in the sleeping room or suite, a visual alarm that is activated upon activation of the smoke detectors shall be provided within the room or suite. Where a *building* fire alarm system is provided, a visual alarm that is activated upon activation of the *building* fire alarm system shall be provided within the room or suite. The signaling line or channel between the activating device of the appliance and the *building* fire alarm system shall be monitored for integrity by the *building* fire alarm system. Where the same appliance is used for visual notification of smoke detector and fire alarm system activation, activation of the room or suite smoke detectors shall not activate the *building* fire alarm system.

702.3.6.2 Location. In sleeping rooms or suites, appliances shall be permanently installed at a location where alarm signals shall be visible, directly or by reflection, in all parts of the room or suite. In sleeping rooms the appliance shall be located 16 feet (4880 mm) maximum from the

head end of the bed location, measured horizontally. Where a suite contains more than one sleeping room, an appliance shall be provided in each sleeping room.

Figure 702.3.6.2

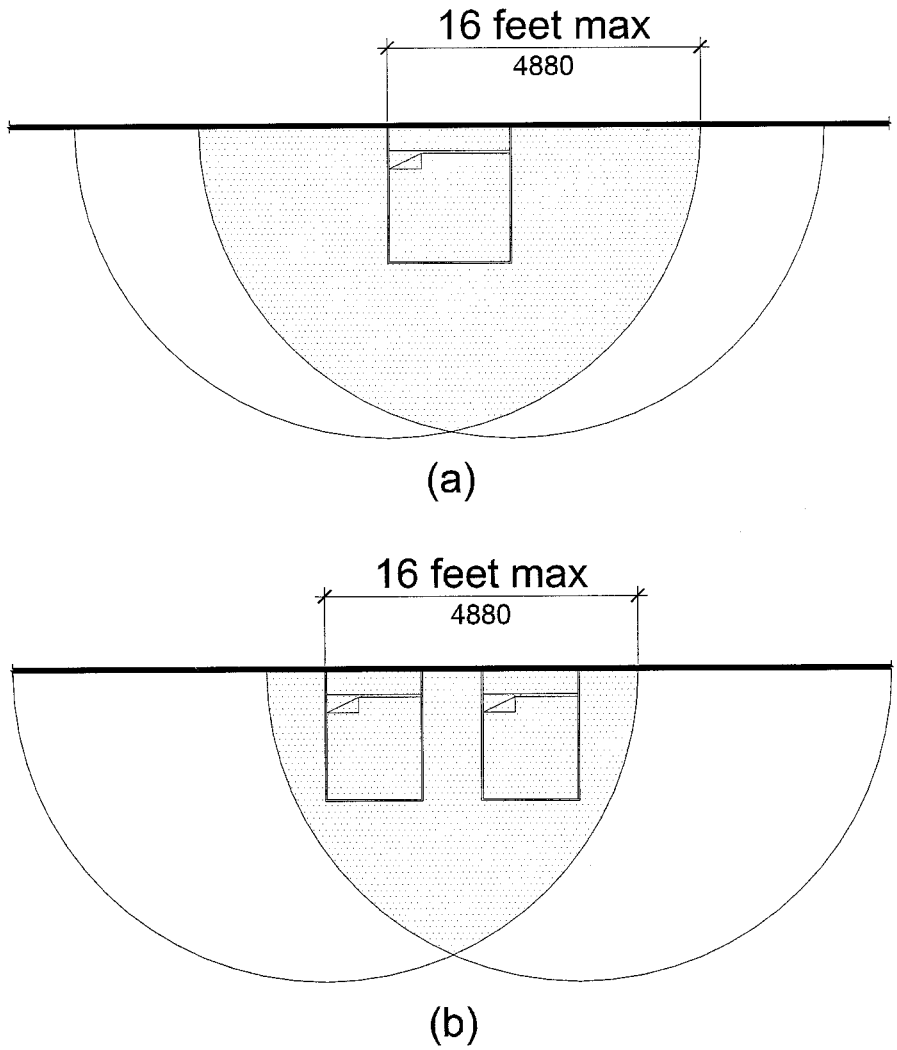

702.3.6.3 Minimum Effective Intensity and Mounting Height. Wall installed appliances located 24 inches (610 mm) minimum below the ceiling shall have a minimum effective intensity of 110 candela. Ceiling installed appliances and wall installed appliances located less than 24 inches (610 mm) below the ceiling shall have a minimum effective intensity of 177 candela.

703 Signs

703.1 General. *Signs* required to be *accessible* shall comply with 703.

703.2 Characters that are Both Tactile and Visual. *Characters* required to be *tactile* shall comply with 703.2. *Tactile characters* shall be duplicated in Braille complying with 703.5.

EXCEPTION: *Tactile characters* shall be permitted to comply with 703.3, where separate visual *characters* complying with 703.4 provide the same information.

703.2.1 Finish and Contrast. *Characters* and their background shall have a non-glare finish. *Characters* shall contrast with their background with either light *characters* on a dark background or dark *characters* on a light background.

703.2.2 Tactile Characters. *Tactile characters* shall be raised 1/32 inch (0.8 mm) minimum above their background. Raised borders and decorative *elements* that are not required shall be separated 3/8 inch (9.5 mm) minimum from *tactile characters*.

703.2.3 Character Forms. Fonts shall have *characters* complying with 703.2.3.

703.2.3.1 Case. *Characters* shall be uppercase.

703.2.3.2 Style. *Characters* shall be sans serif. *Characters* shall not be italic, oblique, script, highly decorative, or of other unusual forms.

703.2.3.3 Width. *Character* width shall be 55 percent minimum and 110 percent maximum the height of the *character* with the width based on the uppercase letter "O" and the height based on the uppercase letter "I".

703.2.3.4 Height. *Character* height measured vertically from the baseline of the *character* shall be 5/8 inch (16 mm) minimum and 2 inches (51 mm) maximum based on the uppercase letter "I".

Figure 703.2.3.4

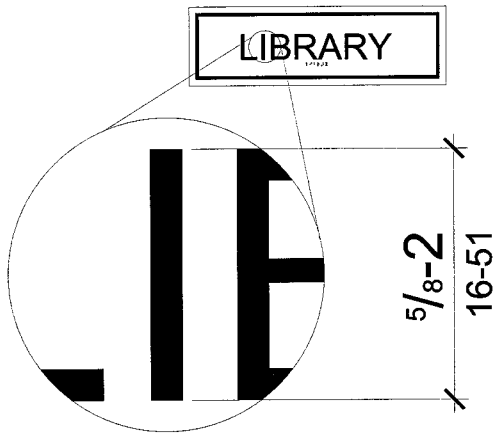

703.2.3.5 Stroke Thickness. For *characters* with rectangular cross sections, the stroke thickness of the uppercase letter "I" shall be 10 percent minimum and 15 percent maximum of the height of the *character.* For *characters* with other cross sections, the stroke thickness of the uppercase letter "I" shall be 10 percent minimum and 30 percent maximum of the height of the *character* measured at the base of the cross section. Stroke thickness at the top of the cross section shall be 15 percent maximum of the height of the *character.*

703.2.4 Character Spacing. *Character* spacing shall be measured between the two closest points of adjacent *characters* within a message, excluding word *spaces.* Where *characters* have rectangular cross sections, spacing between individual *characters* shall be 1/8 inch (3 mm) minimum to 3/8 inch (10 mm) maximum. Where *characters* have other cross sections, spacing between individual *characters* shall be 1/16 inch (2 mm) minimum to 3/8 inch (10 mm) maximum at the base of the cross sections and 1/8 inch (3 mm) to 3/8 inch (10 mm) maximum at the top of the cross sections.

703.2.5 Line Spacing. Spacing between the baselines of separate lines of *characters* in a sentence or paragraph shall be 135 percent minimum and 170 percent maximum of the *character* height.

703.2.6 Mounting Height. *Characters* shall be located 48 inches (1220 mm) minimum and 60 inches (1525 mm) maximum above the adjacent floor or ground surface measured from the baseline of the *characters*.

Figure 703.2.6

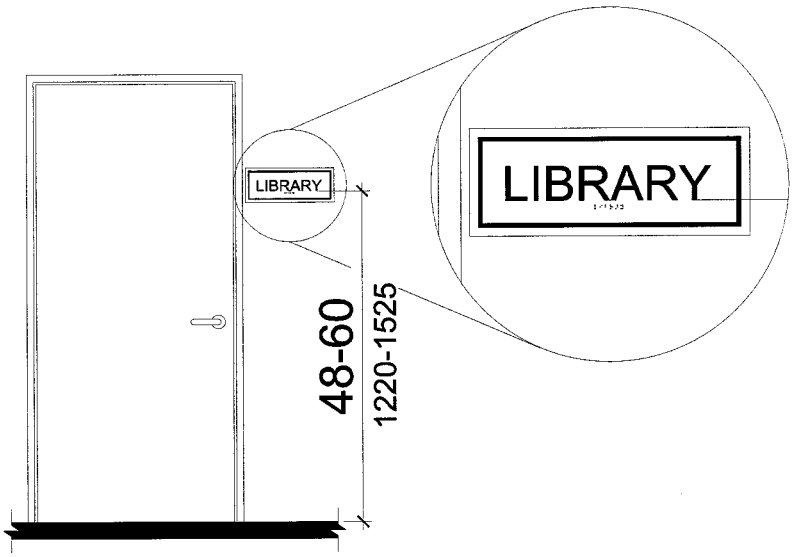

EXCEPTION: This requirement shall not apply to elevator car controls.

703.2.7 Mounting Location. Where a *sign* containing *tactile characters* is provided at a door, the *sign* shall be located alongside the door at the latch side. Where a *tactile sign* is provided at double doors, the *sign* shall be located to the right of the right hand door. Where there is no wall *space* at the latch side of a single door or to the right side of double doors, *signs* shall be located on the nearest adjacent wall. *Signs* containing *tactile characters* shall be located so that a clear floor *space*

of 18 inches (455 mm) minimum by 18 inches (455 mm) minimum, centered on the *sign*, is provided beyond the arc of any door swing between the closed position and 45 degree open position.

Figure 703.2.7

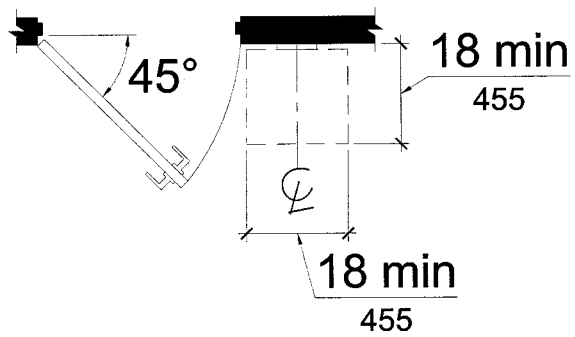

EXCEPTION: *Signs* shall be permitted on the push side of doors with closers and without hold-open devices.

703.3 Tactile Characters. Where *tactile characters* are required and separate *tactile* and visual *characters* with the same information are provided, *tactile characters* shall comply with 703.3 and visual *characters* shall comply with 703.4. *Tactile characters* shall be duplicated in Braille complying with 703.5.

703.3.1 Tactile Characters. *Tactile characters* shall be raised 1/32 inch (0.8 mm) minimum above their background. Raised borders and decorative *elements* that are not required shall be separated 3/8 inch (9.5 mm) minimum from *tactile characters*.

703.3.2 Character Forms. Fonts shall have *characters* complying with 703.3.2.

703.3.2.1 Case. *Characters* shall be uppercase.

703.3.2.2 Style. *Characters* shall be sans serif. *Characters* shall not be italic, oblique, script, highly decorative, or of other unusual forms.

703.3.2.3 Width. *Character* width shall be 55 percent minimum and 110 percent maximum the height of the *character* with the width based on the uppercase letter "O" and the height based on the uppercase letter "I".

703.3.2.4 Height. *Character* height measured vertically from the baseline of the *character* shall be 1/2 inch (13 mm) minimum and 3/4 inch (19 mm) maximum based on the height of the uppercase letter "I".

703.3.2.5 Stroke Thickness. Stroke thickness of the uppercase letter "I" shall be 15 percent maximum of the height of the *character*.

703.3.3 Character Spacing. *Character* spacing shall be measured between the two closest points of adjacent *character* within a message, excluding word *spaces*. Spacing between individual *characters* shall be 1/8 inch (3 mm) minimum to 1/4 inch (6 mm) maximum.

703.3.4 Line Spacing. Spacing between the baselines of separate lines of *characters* within a message shall be 135 percent minimum and 170 percent maximum of the *character* height.

703.3.5 Mounting Height. *Characters* shall be located 48 inches (1220 mm) minimum and 60 inches (1525 mm) maximum above the adjacent floor or ground surface, measured from the baseline of the *characters*.

EXCEPTION: This requirement shall not apply to elevator car controls.

703.3.6 Mounting Location. Where a *tactile sign* is provided at a door, the *sign* shall be located alongside the door at the latch side. Where a *tactile sign* is provided at double doors, the *sign* shall be located to the right of the right hand door. Where there is no wall *space* at the latch side of a single door or to the right side of double doors, *signs* shall be located on the nearest adjacent wall. *Signs* containing *tactile characters* shall be located so that a clear floor *space* of 18 inches (455 mm) by 18 inches (455 mm) minimum, centered on the *sign*, is provided beyond the arc of any door swing between the closed position and 45 degree open position.

EXCEPTION: *Signs* shall be permitted on the push side of doors with closers and without hold-open devices.

703.4 Visual Characters. Visual *characters* required to be *accessible* shall comply with 703.4.

703.4.1 Finish and Contrast. *Characters* and their background shall have a non-glare finish. *Characters* shall contrast with their background with either light *characters* on a dark background or dark *characters* on a light background.

Advisory 703.4.1
Signs are more legible for persons with low vision when *characters* contrast with their background by approximately 70 percent. Contrast in percent can be determined by: contrast =[(B1-B2)/B1] x 100 where B1=light reflectance value (LRV) of the lighter area and B2=light reflectance value (LRV) of the darker area. Note: in any application both white and black are never absolute; thus B1 never equals 100 and B2 is always greater than zero.

703.4.2 Character Forms. Fonts shall have *characters* complying with 703.4.2.

703.4.2.1 Case. *Characters* shall be uppercase or lowercase or a combination of both.

703.4.2.2 Style. *Characters* shall be conventional in form. *Characters* shall not be italic, oblique, script, highly decorative, or of other unusual forms.

703.4.2.3 Width. *Character* width shall be 55 percent minimum and 110 percent maximum the height of the *character* with the width based on the uppercase letter "O" and the height based on the uppercase letter "I".

703.4.2.4 Height. Minimum *character* height measured from the baseline of the *character* shall comply with Table 703.4.2.4 based on the height of the *characters* above the finished floor of the viewing location and the minimum viewing distance. *Character* height shall be based on the uppercase letter "I". Minimum viewing distance shall be measured as the horizontal distance where an obstruction prevents further approach towards the *sign*.

Table 703.4.2.4 Visual Character Dimensions

Height of Floor to Baseline of Character	Minimum Viewing Distance	Minimum Character Height
less than 40 inches (100 mm)[1]		
40 inches (100 mm) to less than or equal to 70 inches (1780 mm)	less than 6 feet (1830 mm)	5/8 inch (16 mm)
	6 feet (1830 mm) and greater	5/8 inch (16 mm), plus 1/8 inch (3.2 mm) per foot (305 mm) of viewing distance above 6 feet (1830 mm)
70 inches (1780 mm) to less than or equal to 120 inches (3050 mm)	less than 15 feet (4570 mm)	2 inches (51 mm)
	15 feet (4570 mm) and greater	2 inches (51 mm), plus 1/8 inch (3.2 mm) per foot (305 mm) of viewing distance above 15 feet (4570 mm)
greater than 120 inches (3050 mm)	less than 21 feet (6400 mm)	3 inches (75 mm)
	21 feet (6400 mm) and greater	3 inches (75 mm), plus 1/8 inch (3.2 mm) per foot (305 mm) of viewing distance above 21 feet (6400 mm)

1. not permitted except in elevators

703.4.2.5 Stroke Thickness. Stroke thickness of the uppercase letter "I" shall be 10 percent minimum and 30 percent maximum of the height of the *character*.

703.4.3 Character Spacing. *Character* spacing shall be measured between the two closest points of adjacent *characters*, excluding word *spaces*. Spacing between individual *characters* shall be 10 percent minimum and 35 percent maximum of *character* height.

703.4.4 Line Spacing. Spacing between the baselines of separate lines of *characters* shall be 135 percent minimum and 170 percent maximum of the *character* height.

703.4.5 Mounting Height. Visual *characters* shall be located 40 inches (1015 mm) minimum above the floor of the viewing position. Mounting heights shall comply with Table 703.4.2.4 based on the size of the *characters* on the *sign*.

703.5 Braille. *Tactile characters* shall be accompanied by Grade II Braille complying with Table 703.5 and 703.5. Braille dots shall have a domed or rounded shape.

Table 703.5 Braille Dimensions

Measurement Range	Minimum in Inches	Maximum in Inches
Dot base diameter	0.059 (1.5 mm)	0.063 (1.6 mm)
Distance between two dots in the same cell[1]	0.090 (2.3 mm)	0.100 (2.5 mm)
Distance between corresponding dots in adjacent cells[1]	0.241 (6.1 mm)	0.300 (7.6 mm)
Dot height	0.025 (0.6 mm)	0.037 (0.9 mm)
Distance between corresponding dots from one cell directly below[1]	0.395 (10 mm)	0.400 (10.2 mm)

1. measured center to center

703.5.1 Location. Braille shall be located below the corresponding text. If text is multi-lined, Braille shall be placed below the entire text. Braille shall be separated 1/4 inch (6.4 mm) minimum from any other *tactile characters*.

EXCEPTION: Braille provided on elevator car controls shall be separated 3/16 inch (4.8 mm) minimum and shall be located either directly below or adjacent to the corresponding *tactile characters* or symbols.

703.5.2 Raised Borders and Decorative Elements. Raised borders and decorative *elements* that are not required, shall be separated 3/8 inch (9.5 mm) minimum from Braille.

703.5.3 Height. Braille shall be located 40 inches (1015 mm) minimum and 60 inches (1525 mm) maximum above the floor measured from the baseline of the Braille cells.

Figure 703.5.3

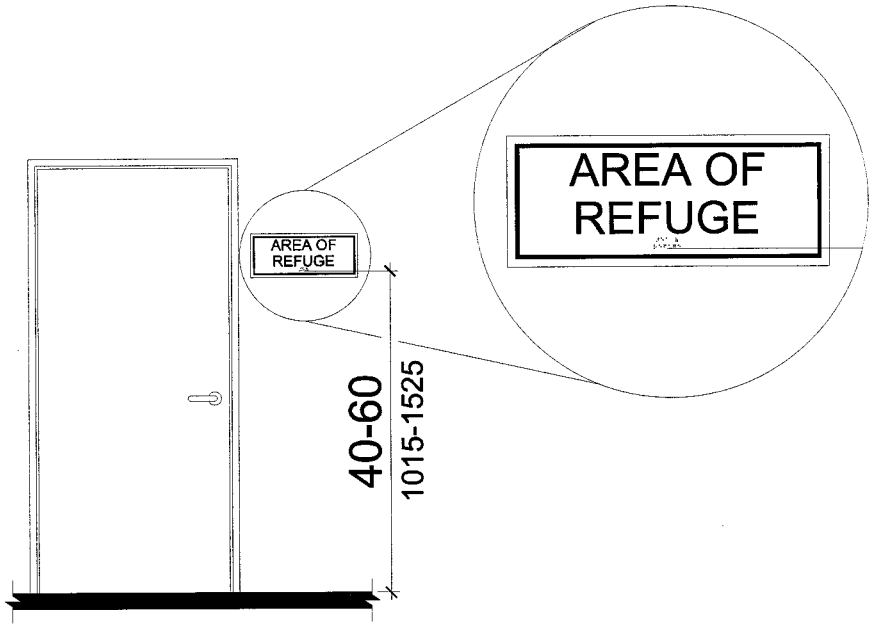

EXCEPTION: This requirement shall not apply to elevator car controls.

703.6 Pictograms. Where *pictograms* are required to be *accessible*, they shall comply with 703.6.

703.6.1 Pictogram Field. *Pictograms* shall have a field height of 6 inches (150 mm) minimum. *Characters* or Braille shall not be located in the *pictogram* field.

Figure 703.6.1

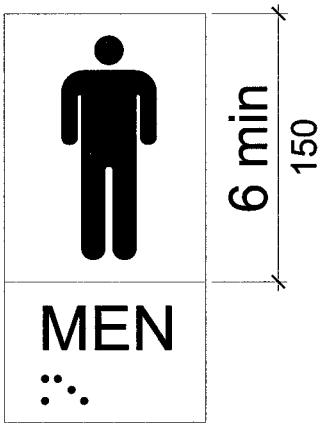

703.6.2 Finish and Contrast. *Pictograms* and their field shall have a non-glare finish. *Pictograms* shall contrast with their field with either a light *pictogram* on a dark field or a dark *pictogram* on a light field.

703.6.3 Text Descriptors. Where text descriptors for *pictograms* are required, they shall located directly below or adjacent to the *pictogram* and shall comply with 703.2.

703.7 Symbols of Accessibility. Where symbols of accessibility are required, they shall comply with 703.7.

703.7.1 Finish and Contrast. Symbols of accessibility and their background shall have a non-glare finish. Symbols of accessibility shall contrast with their background with either a light symbol on a dark background or a dark symbol on a light background.

703.7.2 Symbols.

703.7.2.1 International Symbol of Accessibility. Where the International Symbol of Accessibility is required, it shall comply with Figure 703.7.2.1.

Figure 703.7.2.1

703.7.2.2 International Symbol of TTY. Where the International Symbol of *TTY* is required, it shall comply with Figure 703.7.2.2.

Figure 703.7.2.2

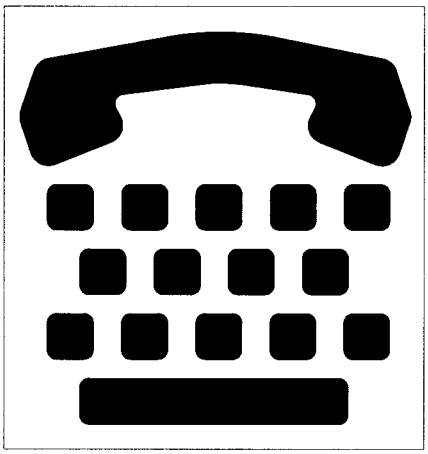

703.7.2.3 Volume Controlled Telephones. Telephones required to have a volume control shall be identified by a *sign* containing a *pictogram* of a telephone handset with radiating sound waves on a square field such as shown in Figure 703.7.2.3.

Figure 703.7.2.3

703.7.2.4 Assistive Listening Systems. Where assistive listening systems are required to be identified by the International Symbol of Access for Hearing Loss, it shall comply with Figure 703.7.2.4.

Figure 703.7.2.4

704 Telephones

704.1 General. Public telephones required to be *accessible* shall comply with 704.

704.2 Wheelchair Accessible Telephones. Public telephones required to be *wheelchair accessible* shall comply with 704.2.

704.2.1 Clear Floor or Ground Space. A clear floor or ground *space* complying with 305 shall be provided. The clear floor or ground *space* shall not be restricted by bases, enclosures or seats.

Figure 704.2.1

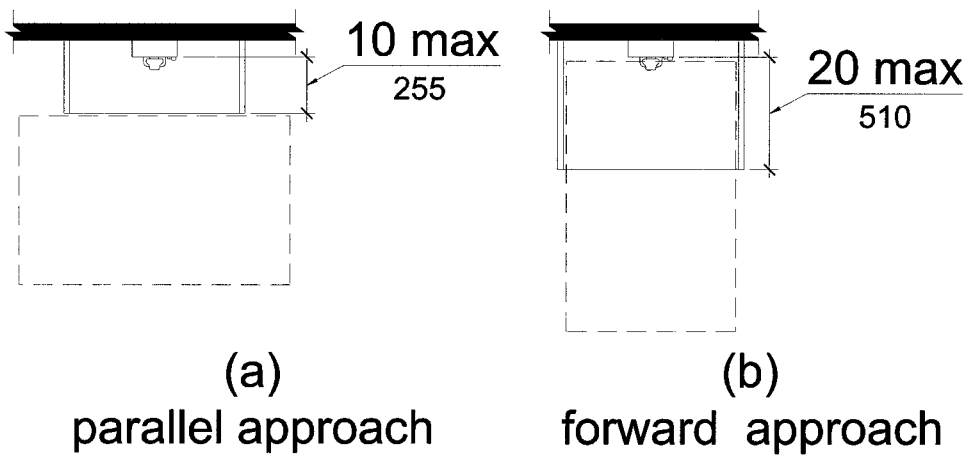

704.2.1.1 Parallel Approach. Where a parallel approach is provided, the distance from the edge of the telephone enclosure to the face of the telephone unit shall be 10 inches (255 mm) maximum.

704.2.1.2 Forward Approach. Where a forward approach is provided, the distance from the front edge of a counter within the telephone enclosure to the face of the telephone unit shall be 20 inches (510 mm) maximum.

704.2.2 Operable Parts. *Operable parts* shall comply with 309. Telephones shall have push-button controls where service for such equipment is available.

704.2.3 Protruding Objects. Telephones, enclosures and related equipment shall comply with 307.

704.2.4 Telephone Directories. Telephone directories, where provided, shall be located in accordance with 309.

704.2.5 Cord Length. The cord from the telephone to the handset shall be 29 inches (735 mm) long minimum.

704.3 Volume Control Telephones. Public telephones required to have volume controls shall be equipped with a receive volume control that provides a gain adjustable up to a minimum of 20 dB. For incremental volume control, provide at least one intermediate step of 12 dB of gain. An automatic reset shall be provided.

Advisory 704.3
Amplifiers on pay phones are located in either the base or the handset and are built into the telephone. Most are located in the base and are operated by pressing a button or key. If the microphone in the handset is not being used, a mute button that temporarily turns it off also reduces the amount of background noise which the person hears in the earpiece. If a volume adjustment is provided that allows the user to set the level anywhere from zero to the upper requirement of 20 dB, there is no need to specify a lower limit. If a stepped volume control is provided, one of the intermediate levels must provide 12 dB of gain. Consider compatibility issues when matching an amplified handset with a phone or phone system. Amplified handsets that can be switched with pay telephone handsets are available. Portable and in-line amplifiers can be used with some phones but are not practical at most public phones covered by this document.

704.4 TTYs. *TTYs* required at a public pay telephone shall be permanently affixed within or adjacent to the telephone enclosure. Where an acoustic coupler is used, the telephone cord shall be sufficiently long to allow connection of the *TTY* and the telephone receiver. *Operable parts* of *TTYs* and the telephones they serve shall comply with 309.

Advisory 704.4
Designers are encouraged to ensure that sufficient electrical service is available where *TTYs* are to be installed.

704.4.1 Clearances. Clear floor *space* positioned for a forward approach shall be provided. Knee and toe clearance complying with 306 shall be provided below the *TTY*. When in use, the touch surface of *TTY* keypads shall be 30 inches (760 mm) minimum and 34 inches (865 mm) maximum above the finish floor.

EXCEPTION: In assembly occupancies, 50 percent plus or minus one *TTY*, shall not be required to comply with 704.4.1 provided that the *TTY* has a seat.

Advisory 704.1.1 Exception
Facilities covered by this section may include, but are not limited to, airports and other passenger terminals or stations, courts, art galleries and convention centers.

704.5 TTY Shelf. Public pay telephones required to accommodate portable *TTYs* shall be equipped with a shelf and an electrical outlet within or adjacent to the telephone enclosure. The telephone handset shall be capable of being placed flush on the surface of the shelf. The shelf shall be capable of

accommodating a *TTY* and shall have 6-inch (150 mm) minimum vertical clearance in the area where the *TTY* is to be placed.

705 Detectable Warnings

705.1 General. *Detectable warnings* required on platform edges shall comply with 705.2, 705.3 or 705.4.

705.2 Truncated Domes. A 24-inch (610 mm) wide truncated dome surface complying with 705.2 shall be provided on the walking surface at the platform edge.

Figure 705.2

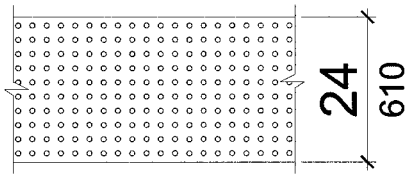

705.2.1 Dome Size. Domes shall have a diameter of 0.9 inch (23 mm), a height of 0.2 inch (5 mm) and a center-to-center spacing of 2.35 inches (60 mm).

Figure 705.2.1

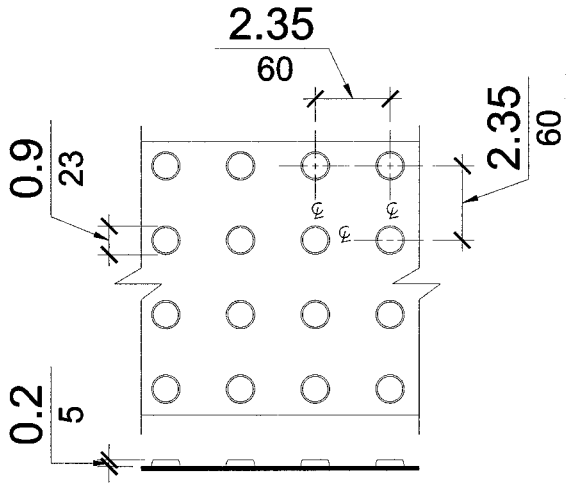

705.2.2 Contrast. The truncated dome surface shall contrast visually with adjoining walking surfaces either light-on-dark, or dark-on-light. The material used to provide contrast shall be an integral part of the truncated dome surface.

705.2.3 Interior Locations. *Detectable warnings* in interior locations shall differ from adjoining walking surfaces in resiliency or sound-on-cane contact.

705.3 Equivalent Tactile Surface. A 24 inch (610 mm) wide *tactile* surface shall be provided on the walking surface at the platform edge. The *tactile* surface shall provide equivalent detectability underfoot to that provided by 705.2.1 and shall provide contrast in accordance with 705.2.2.

705.4 Equivalent Detectability. Equivalent detectability of the platform edge by other construction, technology, or means that will ensure equivalent or superior and reliable communication of the impending change to pedestrians who are blind or visually impaired shall be permitted. The information to be communicated must include 24 inches (610 mm) of advance warning of the platform edge and the precise orientation of the platform edge in relation to the pedestrian.

706 Assistive Listening Systems

706.1 General. Assistive listening systems required in *assembly areas* shall comply with 706.

706.2 Types of Listening Systems. Induction loops, infrared systems, FM and AM radio frequency systems, hard-wired earphones, and other equivalent devices shall be permitted as acceptable assistive listening systems.

Advisory 706.2
Assistive listening systems are generally categorized by their mode of transmission. There are hard-wired systems and three types of wireless systems: induction loop, infrared, and FM radio transmission. Each has different advantages and disadvantages that can help determine which system is best for a given application. For example, an FM system, which is broadcast to an entire area, may be better than an infrared system, which is directional in transmission, in some open-air assemblies since infrared signals can be overpowered by the sun or by movement of people. On the other hand, an infrared system is typically a better choice than an FM system where confidential transmission is important because it is directional.

706.3 Receiver Jacks. Receivers required for use with an assistive listening system shall include a 1/8-inch (3 mm) standard mono jack. Where other jack types are used, adapters shall be provided to comply with this provision.

Advisory 706.3
Earphone jacks with variable volume controls benefit only people who have slight hearing loss and do not help people who use hearing aids.

706.4 Receiver Hearing-Aid Compatibility. Receivers required to be hearing-aid compatible shall interface with T-coils in hearing aids through the provision of neck loops.

Advisory 706.4
Neckloops and headsets that can be worn as neckloops are compatible with hearing aids. Receivers that are not compatible include earbuds, which may require removal of hearing aids, silhouette transducers, earphones, and headsets that must be worn over the ear, which can create disruptive interference in the transmission and can be uncomfortable for people wearing hearing aids.

707 Automatic Teller Machines and Fare Machines

707.1 General. Automatic teller machines and fare machines required to be *accessible* shall comply with 707.

Advisory 707.1
If farecards have one tactually distinctive corner they may be inserted with greater ease. Token collection devices that are designed to accommodate tokens which are perforated can allow a person to distinguish more readily between tokens and common coins. Place *accessible* gates and fare vending machines in close proximity to other *accessible elements* when feasible so the *facility* is easier to use.

707.2 Clear Floor or Ground Space. A clear floor or ground *space* complying with 305 shall be provided.

EXCEPTION: Clear floor or ground *space* is not required at drive-up only automatic teller machines.

707.3 Operable Parts. *Operable parts* shall comply with 309. Each *operable part* shall be able to be differentiated by sound or touch without activation.

EXCEPTION: Drive-up only automatic teller machines shall not be required to comply with 309.2 and 309.3.

707.4 Input. Input devices shall comply with 707.4.

707.4.1 Privacy. The opportunity for the same degree of privacy of input shall be available to all individuals utilizing the equipment.

707.4.2 Key Surfaces. All keys used to operate a machine shall be tactually discernible. Key surfaces shall be raised above the surrounding surface by 1/25 inch (1 mm) minimum. The outer edge of key surfaces shall have a radius of 1/50 inch (0.5 mm) maximum.

EXCEPTION: The touch areas of video display screens shall not be required to be tactually discernible.

707.4.3 Separation Between Keys. Any key surface shall be separated from other key surfaces by 1/8 inch (3.2 mm) minimum. Function keys shall be separated from numeric keys by a distance that is not less than three times greater the distance between the numeric keys.

707.4.4 Numeric Keys. Where provided, numeric keys shall comply with 707.4.4.1 and 707.4.4.2.

707.4.4.1 Arrangement. Numeric keys shall be arranged in a 12-key telephone keypad layout with the number one key in the upper left hand corner.

707.4.4.2 Marking. The number five key shall have a single raised dot.

707.4.5 Function Keys. Where provided, function keys shall comply with 707.4.5.

707.4.5.1 Arrangement. Function keys shall be arranged in the order of enter, clear, cancel, add value and decrease value horizontally from left to right or vertically from top to bottom. Where provided, add value and decrease value function keys shall be grouped with other function keys.

707.4.5.2 Marking. Function keys shall be marked with *tactile characters* as follows: Enter or proceed key: raised circle; Clear or correct key: raised vertical line or bar; Cancel key: raised ex; Add value key: raised plus *sign*; Decrease value key: raised minus *sign*.

707.4.5.3 Color Coding. Where function keys are color coded, they shall be colored as follows: Enter or proceed key: green; Clear or correct key: black; Cancel key: red; Add value key: blue; Decrease value key: yellow.

707.5 Output. Output devices shall comply with 707.5.

Advisory 707.5
Speech output should be supplied for all displayed text and labels. For information which is presented in non-text form (e.g., a picture or graphic), consider using a verbal description unless the graphic is just decorative. When speech output is utilized, allow for the spoken message to be repeated if the message is very long.

707.5.1 Privacy. The opportunity for the same degree of privacy of output shall be available to all individuals utilizing the equipment.

707.5.2 Transaction Prompts. All transaction prompts within each operation shall be provided.

707.5.3 Input Verification. Verification of all user inputs shall be provided.

Advisory 707.5.3
An audible beep may be used to indicate that personal identification numbers have been entered.

707.5.4 Operating Instructions. Machines shall provide visual and audible instructions for operation. Visual and audible instructions shall include all information required by 707.5.4.

707.5.4.1 Initiation. Instructions shall be able to be initiated by the user of the machine.

707.5.4.2 Expedited Process. After initiation, instructions shall be available for the experienced user to expedite the transaction.

707.5.4.3 Orientation. Orientation and assistance for unfamiliar users to the physical features of the machine, operational options, and details for each function shall be provided.

707.5.5 Audible Instruction. Audible instructions shall be provided through a standard audio mini jack, a telephone handset, a wireless transmission system or another mechanism that is readily available to all customers.

707.5.6 Video Display Screen. The video display screen shall comply with 707.5.6.

Advisory 707.5.6
For video display screens required to be *accessible*, the screen should be visible and usable by persons standing and sitting.

707.5.6.1 Visibility. The screen shall be visible from a point located 40 inches (1015 mm) above the center of the clear floor *space* in front of the machine.

EXCEPTION: This requirement shall not apply to drive-up only automatic teller machines.

707.5.6.2 Characters. *Characters* displayed on the screen shall be in a sans serif font. *Characters* shall be 3/16 inch (4.8 mm) minimum in height based on the uppercase letter "I". *Characters* shall contrast with their background with either light *characters* on a dark background or dark *characters* on a light background.

707.5.7 Dispensing of Bills. Machines that dispense paper currency shall dispense the currency in descending order with the lowest denomination on top.

707.5.8 Receipts and Verification. Where a receipt is available and is requested, the following options shall be provided: a printed receipt, audible presentation of the transaction information provided on the receipt, or both.

708 Two-Way Communication Systems

708.1 General. Two-way communication systems required to be *accessible* shall comply with 708.

Advisory 708.1
Devices that do not require handsets are easier to use by people who have a limited reach.

708.2 Audible and Visual Indicators. The system shall provide both visual and audible signals.

Advisory 708.2
It is recommended that a device with a light be used to indicate visually that assistance is on the way. Consideration should be given to providing *signs* to indicate the meaning of visual signals.

708.3 Handsets. Handset cords, if provided, shall be 29 inches (735 mm) long minimum.

EXCEPTION: This requirement shall not apply to two-way communication systems provided at inaccessible *entrances*.

CHAPTER 8: SPECIAL ROOMS, SPACES, AND ELEMENTS

801 General

801.1 Scope. Special rooms, *spaces* and elements required to be *accessible* by Chapter 2 shall comply with the applicable provisions of this chapter.

802 Wheelchair Spaces and Designated Aisle Seats in Assembly Areas

802.1 General. *Wheelchair spaces*, readily removable companion seats, and designated aisle seats required in *assembly areas* shall comply with 802.

802.2 Floor or Ground Surface. The floor or ground surface of *wheelchair spaces* shall comply with 302. Changes in level are not permitted.

EXCEPTION: Slopes not steeper than 1:48 shall be permitted.

802.3 Width. A single *wheelchair space* shall be 36 inches (915 mm) minimum in width. Where multiple adjacent *wheelchair spaces* are provided, each *wheelchair space* shall be 33 inches (840 mm) minimum in width.

Figure 802.3

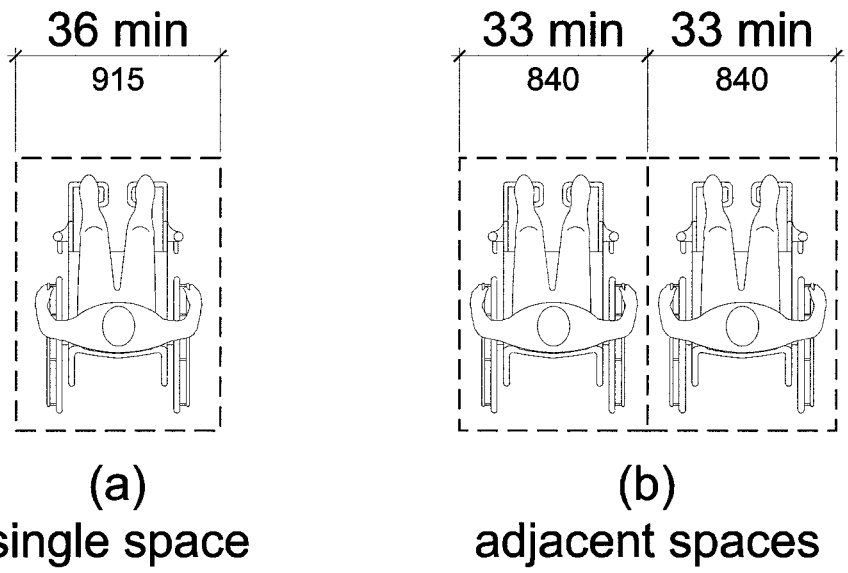

802.4 Depth. Where a *wheelchair space* can be entered from the front or rear, the *wheelchair space* shall be 48 inches (1220 mm) minimum in depth. Where a *wheelchair space* can be entered only from the side, the *wheelchair space* shall be 60 inches (1525 mm) minimum in depth.

Figure 802.4

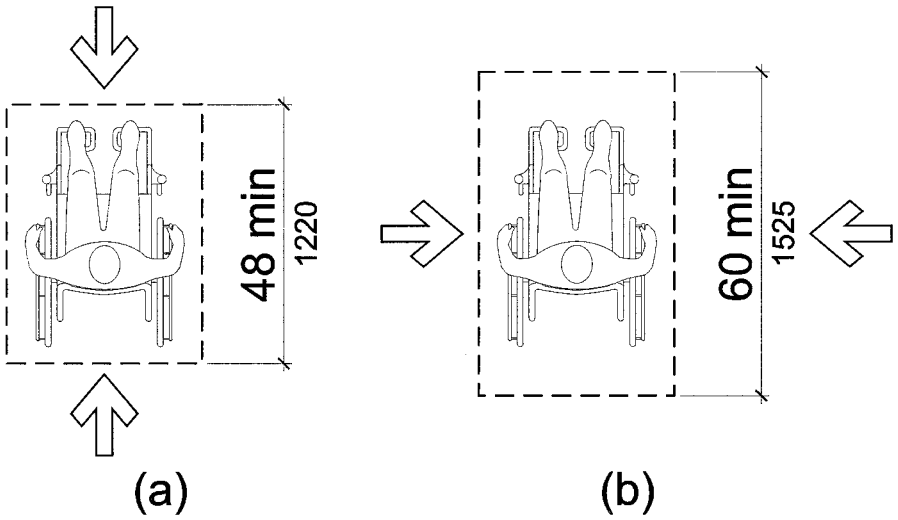

802.5 Approach. One side of the *wheelchair space* shall adjoin an *accessible route* or adjoin another *wheelchair space*. Access to any *wheelchair space* shall not be through more than one adjoining *wheelchair space*.

802.6 Dispersion of Accessible Seating. Where the number of seats exceeds 300, *wheelchair spaces* and designated aisle seats shall be dispersed to provide a choice of admission prices and viewing angles comparable to that provided to other spectators. Where the minimum number of required *wheelchair spaces* or designated aisle seats is not sufficient to allow for complete dispersion, *wheelchair spaces* or designated aisle seats shall be dispersed in the following priority: price level, horizontal dispersion and vertical dispersion.

802.6.1 Admission Prices. *Wheelchair spaces* and designated aisle seats shall be provided in each price level distinguishable by location.

802.6.2 Horizontal Dispersion. *Wheelchair spaces* and designated aisle seats shall be located to provide spectators in *accessible* seating with viewing angles generally representative of the horizontal viewing areas available to other spectators.

802.6.3 Vertical Dispersion. *Wheelchair spaces* and designated aisle seats shall be located at varying distances from the performance area on each *accessible* level and in each balcony or *mezzanine* that is located along an *accessible route*.

802.7 Readily Removable Companion Seats. A readily removable companion seat shall be provided next to and in the same row as each required *wheelchair space*. Individuals seated in companion seats shall be seated shoulder-to-shoulder with the *wheelchair* user seated in the adjacent *space*.

802.8 Designated Aisle Seats. Removable or folding armrests or no armrests shall be provided on the aisle side of designated aisle seats. Each such seat shall be identified by a *sign* or marker.

Advisory 802.8
Seats with removable or folding armrests, or no armrests, are intended for use by individuals who have difficulty walking. Consideration should be given for ensuring identification of such seats in a darkened room. For example, a marker which contrasts (light-on-dark or dark-on-light) and also reflects light could be placed on the side of adjacent seating so as to be visible in a lighted auditorium and also to reflect light from a flashlight.

802.9 Lines of Sight. Spectators seated in *wheelchair*s shall be provided lines of sight comparable to those provided to other spectators.

802.9.1 Comparable Lines of Sight for Seated Spectators. Where spectators are expected to remain seated during events, spectators seated in *wheelchair*s shall be provided with lines of sight to the performance area or playing field comparable to that provided to spectators in the seating area in closest proximity to the location of the *wheelchair spaces,* but not in the same row.

Figure 802.9.1

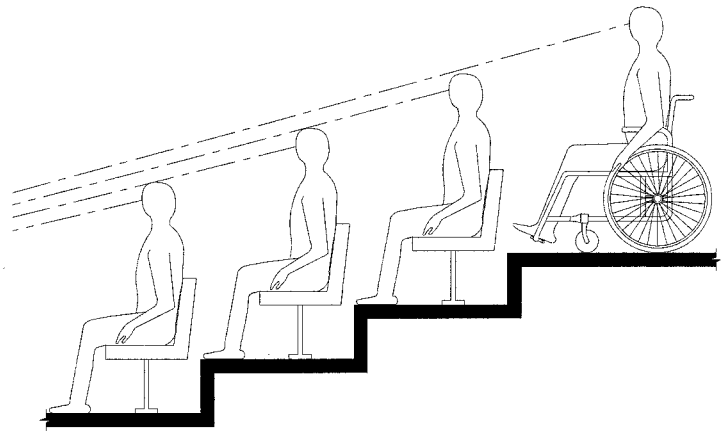

802.9.2 Comparable Lines of Sight Over Standing Spectators. Where people will be expected to stand at their seats during events, *wheelchair spaces* shall be located so that they will provide people seated in *wheelchair*s with lines of sight of the performance area or playing surface over

standing spectators comparable to that provided to standing spectators in the seating area in closest proximity to the *wheelchair spaces*, but not in the same row.

Figure 802.9.2

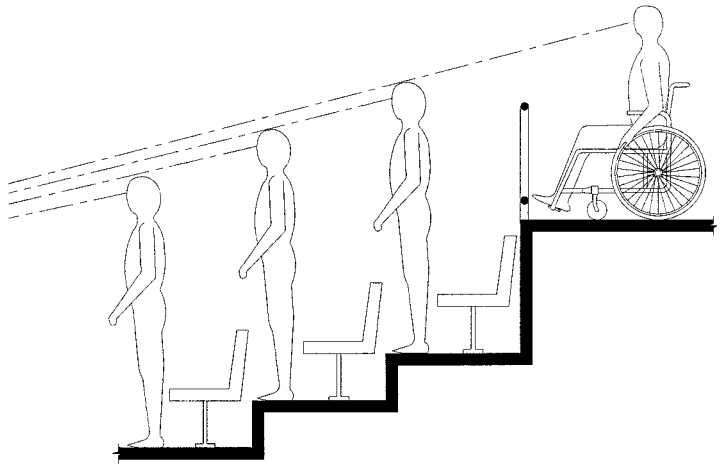

803 Dressing, Fitting, and Locker Rooms

803.1 General. Dressing, fitting, and locker rooms required to be *accessible* shall comply with 803.

803.2 Wheelchair Turning Space. *Wheelchair* turning *space* complying with 304 shall be provided within the room.

EXCEPTION: Nine inches (230 mm) maximum measured vertically and 6 inches (150 mm) maximum measured horizontally shall be permitted to extend under partitions and openings without doors.

Figure 803.2 Exception

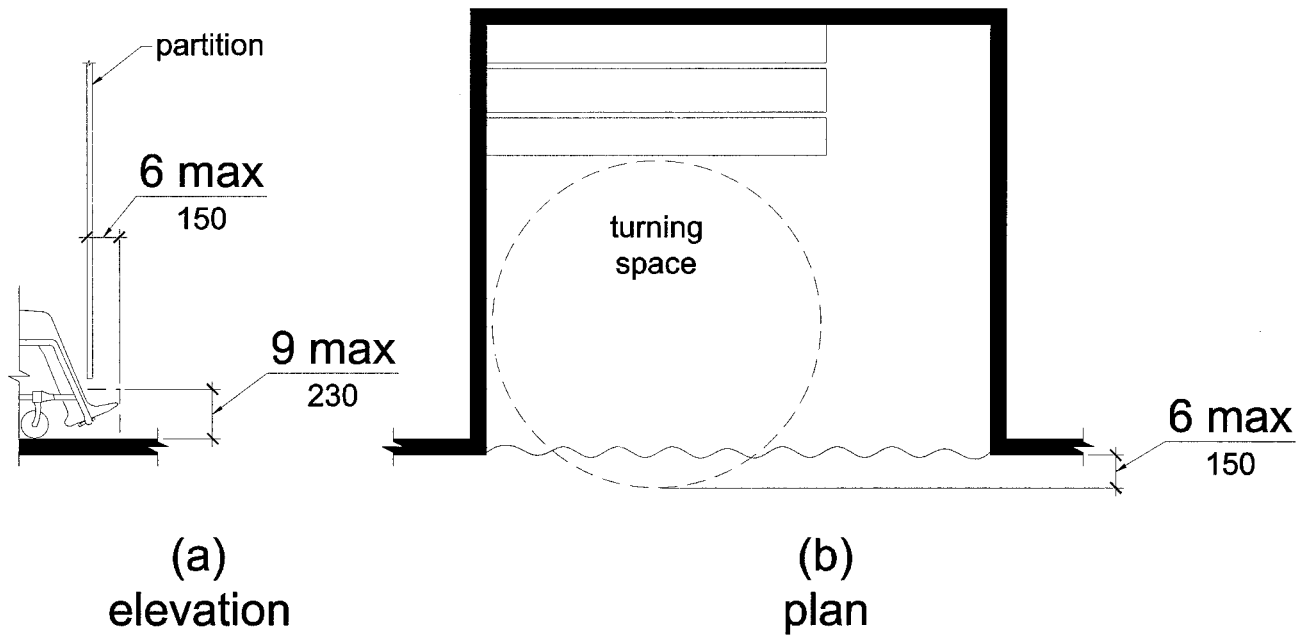

803.3 Doors. Doors shall not swing into any part of the *wheelchair* turning *space.*

803.4 Benches. A bench complying with 903 shall be provided within the room.

803.5 Coat Hooks and Shelves. *Accessible* coat hooks provided within the room shall be located within one of the reach ranges specified in 308. Where provided, a fold-down shelf shall be 40 inches (1015 mm) minimum and 48 inches (1220 mm) maximum above the floor.

804 Sinks, Kitchens, Kitchenettes, and Wet Bars

804.1 General. Sinks, kitchens, kitchenettes and wet bars shall comply with 804.

804.2 Clear Floor Space. A clear floor *space* complying with 305 shall be provided at sinks, appliances, cabinets and counters.

804.3 Cabinets. At least 50 percent of shelf *space* in cabinets shall comply with 905.

804.4 Sinks. Sinks shall comply with 606.

804.5 Appliances. *Operable parts* of appliances shall comply with 309. At least 50 percent of shelf *space* in refrigerators and freezers shall be within at least one of the reach ranges in 308.

805 Medical Care Facility Patient or Resident Sleeping Rooms

805.1 General. Medical care *facility* and long term care *facility* patient or resident sleeping rooms required to be *accessible* shall comply with 805.

805.2 Wheelchair Turning Space. *Wheelchair* turning *space* complying with 304 shall be provided within the room and shall not overlap with or extend beneath a bed.

805.3 Clear Floor or Ground Space. A clear floor *space* complying with 305 shall be provided on each side of the bed. The clear floor *space* shall be positioned for parallel approach to the side of the bed.

805.4 Toilet and Bathing Rooms. Toilet and bathing rooms that are provided as part of a patient or resident sleeping room shall comply with 603.

806 Transient Lodging Guest Rooms

806.1 General. *Transient lodging* guest rooms required to be *accessible* shall comply with 806.2. Guest rooms required to have *accessible* communication features shall comply with 806.3.

806.2 Accessible Rooms. *Accessible* guest rooms shall comply with 806.2.

Advisory 806.2
The provisions in this section do not include requirements that are common to all *accessible spaces.*

806.2.1 Living and Dining Areas. Living and dining areas shall be *accessible.*

806.2.2 Exterior Spaces. Exterior *spaces*, including patios, terraces and balconies, that serve the guest room shall be *accessible.*

806.2.3 Sleeping Areas. Not less than one sleeping area shall provide a clear floor *space* complying with 305 on both sides of a bed. The clear floor *space* shall be positioned for parallel approach to the side of the bed.

EXCEPTION: This requirement shall not apply where a single clear floor *space* complying with 305 positioned for parallel approach is provided between two beds.

806.2.4 Toilet and Bathing Facilities. Not less than one water closet, one lavatory, and one bathtub or shower shall comply with the applicable provisions of Chapter 6. Required roll-in shower compartments shall comply with 608.2.2 or 608.2.3.

806.2.4.1 Vanity Tops. If vanity tops are provided in any non-*accessible* guest toilet room, 2 ft^2 (0.2 m^2) minimum of vanity top shall be provided in each *accessible* guest toilet room and shall comply with 308 and 309. Vanity tops shall be provided at or adjacent to the lavatory.

806.2.5 Sinks, Kitchens, Kitchenettes, and Wet Bars. Sinks, kitchens, kitchenettes, and wet bars shall comply with 804.

806.2.6 Wheelchair Turning Space. *Wheelchair* turning *space* complying with 304 shall be provided within the guest room and shall not overlap with or extend beneath a bed.

806.3 Communication Features. Guest rooms required to have *accessible* communication features shall comply with 806.3.

Advisory 806.3
In guest rooms required to have *accessible* communication features, consideration should be given to ensuring compatibility with adaptive equipment used by people with hearing impairments. To ensure communication within the *facility*, as well as on commercial lines, provide telephone interface jacks that are compatible with both digital and analog signal use. If an audio headphone jack is provided on a speaker phone, a cutoff switch can be included in the jack so that insertion of the jack cuts off the speaker. If a telephone-like handset is used, the external speakers can be turned off when the handset is removed from the cradle. For headset or external amplification system compatibility, a standard subminiature jack installed in the telephone will provide the most flexibility.

806.3.1 Alarms. Visual alarms complying with 702.3.6 shall be provided.

806.3.2 Notification Devices. Visual notification devices shall be provided to alert room occupants of incoming telephone calls and a door knock or bell. Notification devices shall not be connected to visual alarm signal appliances. Permanently installed telephones shall have volume controls compatible with the telephone system and shall comply with 704.3. Permanently installed telephones shall be served by an electrical outlet complying with 309 located within 48 inches (1220 mm) of the telephone to facilitate the use of a *TTY*.

807 Holding Cells and Housing Cells or Rooms

807.1 General. Holding cells or housing cells or rooms required to be *accessible* shall comply with 807.2. Holding cells or housing cells or rooms required to have *accessible* communication features shall comply with 807.3.

807.2 Accessible Cells or Rooms. *Accessible* cells or rooms shall comply with 807.2.

807.2.1 Wheelchair Turning Space. *Wheelchair* turning *space* complying with 304 shall be provided within the cell or room and shall not overlap with or extend beneath a bed.

807.2.2 Benches. Where benches are provided, at least one bench shall comply with 903.

807.2.3 Beds. Where beds are provided, clear floor *space* complying with 305 shall be provided on at least one side of the bed. The clear floor *space* shall be positioned for parallel approach to the side of the bed.

807.2.4 Drinking Fountains and Water Coolers. Where drinking fountains or water coolers are provided, at least one shall comply with 602.1 through 602.6.

807.2.5 Toilet and Bathing Facilities. Toilet facilities or bathing facilities that are provided as part of a cell or room shall comply with 603.

Advisory 807.2.5
In holding cells, housing cells or rooms required to be *accessible*, this document does not require a separate toilet room.

807.3 Communication Features. Cells or rooms required to have *accessible* communication features shall comply with 807.3.

807.3.1 Alarms. Where audible emergency alarm systems are provided to serve the occupants of cells or rooms, visual alarms complying with 702.3.6 shall be provided.

EXCEPTION: This requirement shall not apply where inmates or detainees are not allowed independent means of egress.

807.3.2 Telephones. Permanently installed telephones, where provided within cells or rooms, shall have volume controls complying with 704.3.

CHAPTER 9: BUILT-IN FURNISHINGS AND EQUIPMENT

901 General

901.1 Scope. Built-in furnishings and equipment required to be *accessible* shall comply with the applicable provisions of this chapter.

902 Dining Surfaces and Work Surfaces

902.1 General. Dining surfaces and work surfaces required to be *accessible* shall comply with 902.2 and 902.3.

EXCEPTION: Dining surfaces and work surfaces for *children's use* shall be permitted to comply with 902.4.

902.2 Clear Floor or Ground Space. A clear floor *space* complying with 305 positioned for a forward approach shall be provided. Knee and toe clearance complying with 306 shall be provided.

902.3 Height. The tops of dining surfaces and work surfaces shall be 28 inches (710 mm) minimum to 34 inches (865 mm) maximum above the floor or ground.

Figure 902.3

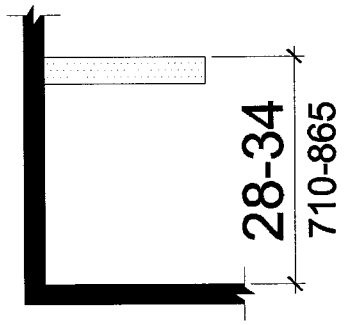

902.4 Dining Surfaces and Work Surfaces for Children's Use. *Accessible* dining surfaces and work surfaces for *children's use* shall comply with 902.4.

EXCEPTION: Dining surfaces and work surfaces that are used primarily by children ages 5 and younger shall not be required to comply with 902.4 where a clear floor or ground *space* complying with 305 positioned for a parallel approach is provided.

902.4.1 Clear Floor or Ground Space. A clear floor *space* complying with 305 positioned for forward approach shall be provided. Knee and toe clearance complying with 306 shall be provided, except that knee clearance 24 inches (610 mm) minimum above the floor or ground shall be permitted.

902.4.2 Height. The tops of tables and counters shall be 26 inches (660 mm) minimum and 30 inches (760 mm) maximum above the floor or ground.

903 Benches

903.1 General. Benches required to be *accessible* shall comply with 903.

903.2 Clear Floor or Ground Space. Clear floor or ground *space* complying with 305 shall be provided and shall be positioned for parallel approach to an end of the bench seat.

903.3 Size. Benches shall have seats that are 20 inches (510 mm) minimum to 24 inches maximum (610 mm) in depth and 42 inches (1065 mm) minimum in length. The bench shall be installed and shall have back support. Back support shall be 42 inches (1065 mm) minimum in length and shall extend from a point 2 inches (51 mm) maximum above the seat to a point 18 inches (455 mm) minimum above the seat.

Figure 903.3

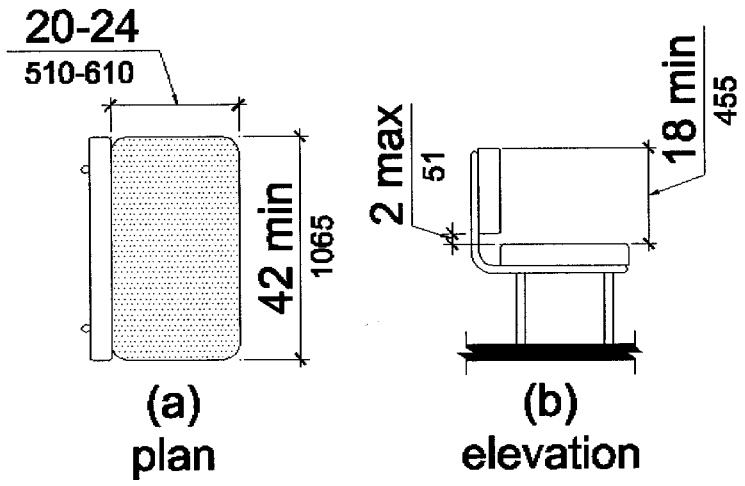

Advisory 903.3

In dressing rooms where benches are fixed to the wall for back support, consideration should be given to providing grab bars on walls adjacent to the bench but not on the seat back, to assist an individual to transfer to the bench.

903.4 Height. The bench seat shall be 17 inches (430 mm) minimum to 19 inches (485 mm) maximum above the floor or ground.

Figure 903.4

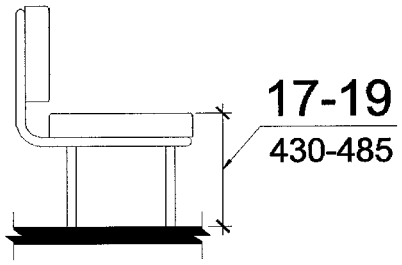

903.5 Structural Strength. Allowable stresses shall not be exceeded for materials used when a vertical or horizontal force of 250 lb (1112 N) is applied at any point on the seat, fastener, mounting device, or supporting structure.

903.6 Wet Locations. Where installed in wet locations, the surface of the seat shall be slip resistant and shall not accumulate water.

904 Sales and Service Counters

904.1 General. Counters required to be *accessible* shall comply with the applicable provisions of 904.

904.2 Approach. All portions of counters required to be *accessible* shall be located adjacent to a walking surface complying with 403.

904.3 Check-Out Aisles. Check-out aisles required to be *accessible* shall comply with 904.3.

904.3.1 Aisle. Aisles shall comply with 403.

904.3.2 Counter. The counter surface height shall be 38 inches (965 mm) maximum above the finished floor or ground. The top of the counter edge protection shall be 2 inches (51 mm) maximum above the top of the counter surface.

Figure 904.3.2

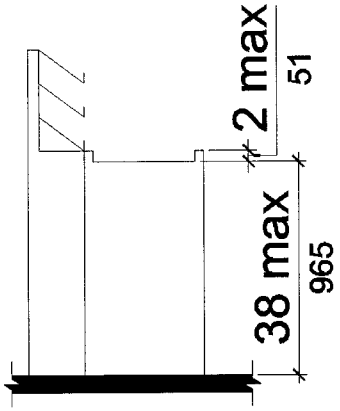

904.4 Point of Sales and Service Counters. Point of sales counters and service counters required to be *accessible* shall comply with 904.4.1 or 904.4.2.

EXCEPTION: In *alterations*, when the provision of an *accessible* counter would result in: a reduction of the number of existing counters at work stations; or a reduction of the number of existing *mail boxes*, a portion of the counter which is 24 inches (610 mm) minimum in length shall be

permitted to be *accessible* provided that the required clear floor or ground *space* is arranged so that its long dimension is centered on the *accessible* length of the counter.

Figure 904.4 Exception

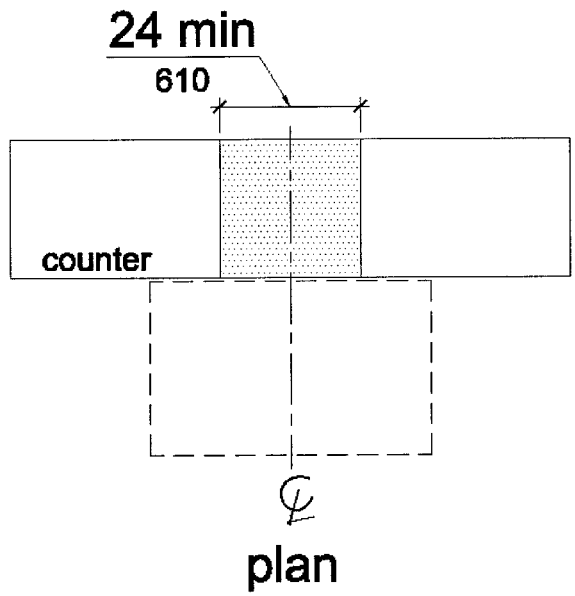

904.4.1 Parallel Approach. A portion of the counter surface which is 36 inches (915 mm) long minimum by 36 inches (915 mm) high maximum above the finish floor shall be provided. A clear floor or ground *space* complying with 305 shall be positioned for a parallel approach adjacent to the *accessible* counter.

Figure 904.4.1

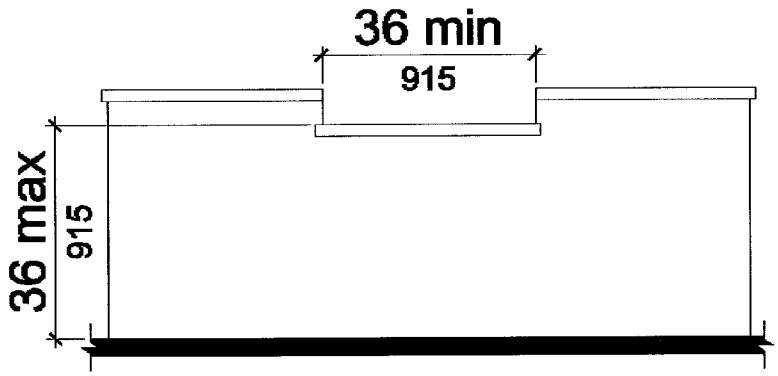

904.4.2 Forward Approach. A portion of the counter surface which is 30 inches (760 mm) long minimum by 36 inches (915 mm) high maximum shall be provided. Knee and toe *space* complying with 306 shall be provided under the *accessible* counter. A clear floor or ground *space* complying with 305 shall be positioned for a forward approach to the *accessible* counter.

Figure 904.4.2

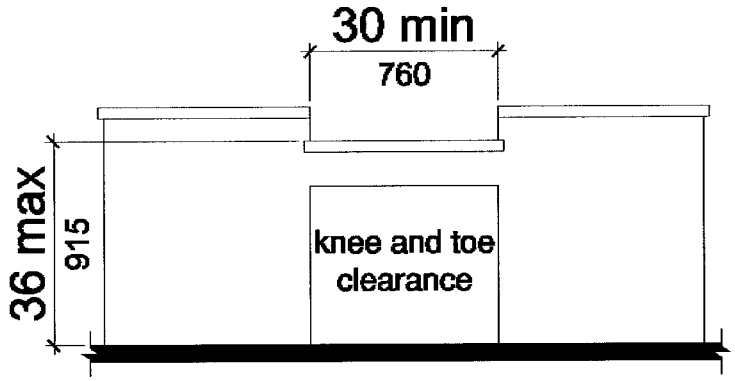

904.5 Food Service Lines. Counters in food service lines shall comply with 904.5.

904.5.1 Self-Service Shelves and Dispensing Devices. Self-service shelves and dispensing devices for tableware, dishware, condiments, food and beverages shall comply with 308.

904.5.2 Tray Slides. The tops of *accessible* portions of tray slides shall be 28 inches (710 mm) minimum and 34 inches (865 mm) maximum above the floor or ground.

Figure 904.5.2

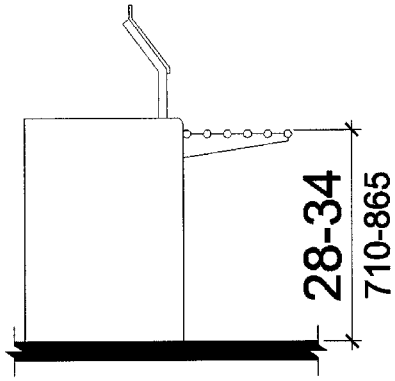

904.6 Security Glazing. Where counters or teller windows have security glazing to separate personnel from the public, at least one of each type shall provide a method to facilitate voice communication. Such

methods may include, but are not limited to, grilles, slats, talk-through baffles, intercoms, or telephone handset devices. The method of communication shall be *accessible* to both individuals who use *wheelchairs* and individuals who have difficulty bending or stooping. Hand-operable communications devices, if provided, shall comply with 704.3.

Advisory 904.6
At least one permanently installed assistive listening device complying with 706 should be provided at each location or series of counters or teller windows where there is security glazing which promotes distortion in audible information. Where assistive listening devices are installed, *signs* should be provided identifying those stations which are so equipped.

905 Storage

905.1 General. Storage *facilities* required to be *accessible* shall comply with 905.

905.2 Clear Floor or Ground Space. A clear floor or ground *space* complying with 305 shall be provided.

905.3 Height. Storage *facilities* shall comply with at least one of the reach ranges specified in 308. Clothes rods or hooks shall be located within one of the reach ranges specified in 308.

905.4 Hardware. Hardware for storage *facilities* shall comply with 309. baffles, intercoms, or telephone handset devices.

CHAPTER 10: TRANSPORTATION FACILITIES

1001 General

1001.1 Scope. Every station, bus stop, bus stop pad, terminal *building* or other transportation *facility* shall comply with the applicable provisions of Chapters 2 through 9, the applicable provisions of this chapter, and Chapter 11.

1002 Bus Stops and Terminals

1002.1 General. Bus stops and terminals shall comply with 1002.

1002.2 Bus Stop Pads. Where new bus stop pads are constructed at bus stops, bays or other areas where a lift or *ramp* is to be deployed, they shall comply with 1002.2.

Advisory 1002.2
At bus stops where a shelter is provided, the bus stop pad can be located either within or outside of the shelter.

1002.2.1 Surface. Bus stop pads shall have a firm, stable surface.

1002.2.2 Dimensions. To the maximum extent allowed by legal or *site* constraints, bus stop pads shall have a clear length of 96 inches minimum measured perpendicular to the curb or vehicle roadway edge and a clear width of 60 inches minimum measured parallel to the vehicle roadway.

Figure 1002.2.2

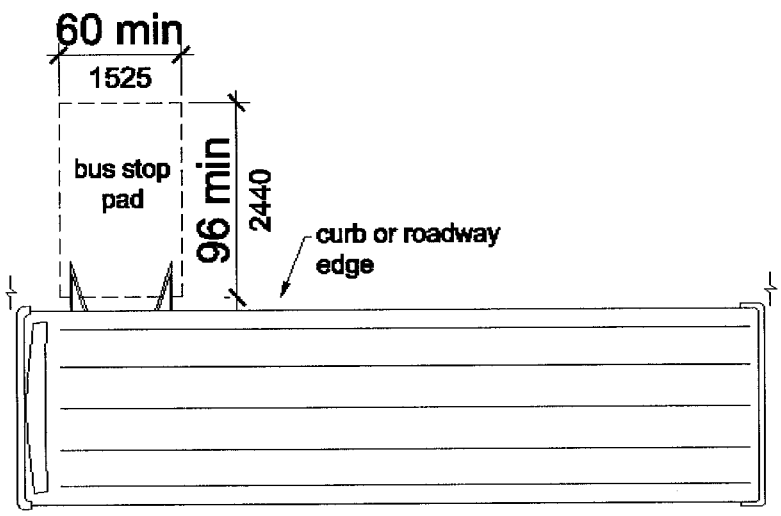

1002.2.3 Connection. Bus stop pads shall be connected to streets, sidewalks or pedestrian paths by an *accessible route* complying with 402.

1002.2.4 Slope. The slope of the bus stop pad parallel to the roadway shall, to the extent practicable, be the same as the roadway. For water drainage, a maximum slope of 1:48 perpendicular to the roadway is allowed.

1002.3 Bus Shelters. Where provided, new or replaced bus shelters shall provide a minimum clear floor or ground *space* complying with 305. Such shelters shall be connected by an *accessible route* to the boarding area required by 1002.2.

Figure 1002.3

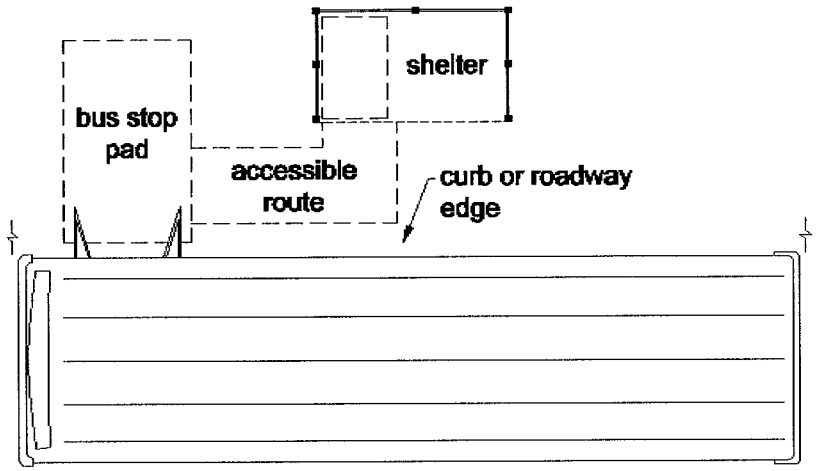

1002.4 Signs. New bus route identification *signs* shall comply with 703.4.1. In addition, to the maximum extent practicable, new bus route identification *signs* shall comply with 703.4.

EXCEPTION: Bus schedules, timetables and maps that are posted at the bus stop or bus bay are not required to comply with this requirement.

1002.5 Bus Stop Siting. Bus stop *sites* shall be chosen such that, to the maximum extent practicable, the areas where lifts or *ramps* are to be deployed comply with 1002.2 and 1002.3.

1003 Facilities and Stations

1003.1 General. *Facilities* and stations shall comply with the applicable provisions of 1003.

1003.2 New Construction. New stations in rapid rail, light rail, commuter rail, intercity rail, high speed rail, and other fixed guideway systems shall comply with the 1003.2.

1003.2.1 Station Entrances. Where different *entrances* to a station serve different transportation fixed routes or groups of fixed routes, at least one *entrance* serving each group or route shall comply with 402. All *accessible entrances* shall, to the maximum extent practicable, coincide with those used by the majority of the public. In below ground subway stations, at least one *entrance* to each station shall comply with 402.

1003.2.2 Signs.

1003.2.2.1 Tactile Signs. Where *signs* are provided at *entrances* to stations identifying the station or the *entrance*, or both, at least one *sign* at each *entrance* shall be *tactile* and shall comply with 703.2. Such *signs* shall be placed in uniform locations at *entrances* within the transit system to the maximum extent practicable.

EXCEPTION: Where the station has no defined *entrance* but *signs* are provided, the *tactile signs* shall be placed in a central location.

Advisory 1003.2.2.1 Exception
Where a station has no defined *entrance*, it may be more difficult to locate the *sign*. In this case, other technologies such as an audible *sign* system using infrared transmitters and receivers may provide greater accessibility. The transmitters are placed on or next to print *signs* and transmit their information to an infrared receiver that is held by a person. By scanning an area, the person will hear the *sign*.

1003.2.2.2 Identification Signs. Stations covered by this section shall have identification *signs* complying with 703.4. *Signs* shall be clearly visible and within the sightlines of a standing or sitting passenger from within the train on both sides when not obstructed by another train.

Advisory 1003.2.2.2
It is also important to place *signs* at intervals in the station where passengers in the vehicle will be able to see a *sign* when the vehicle is either stopped at the station or about to come to a stop in the station. The number of *signs* necessary may be directly related to the size of the lettering displayed on the *sign*.

1003.2.2.3 Informational Signs. Lists of stations, routes and destinations served by the station which are located on boarding areas, platforms, or *mezzanines* shall comply with 703.4. A minimum of one *tactile sign* identifying the specific station and complying with 703.2 shall be provided on each platform or boarding area. *Signs* covered by this provision shall, to the maximum extent practicable, be placed in uniform locations within the transit system.

Advisory 1003.2.2.3
Informational *signs* at fixed *facilities* and stations are those *signs* displaying lists of stations, routes, and destinations served by the station. Route maps are not required to comply with the informational *sign* requirements in this document.

EXCEPTION: Where *sign* space is limited, track numbers, train destination names, directions to the ticket office, and information essential to using the transit system shall have a *character* height of 3 inches (75 mm) minimum and shall comply with 703.4. Specific exit

street names, directional information, and other information not essential to use of the transit system shall have a *character* height of 1-1/2 inches (38 mm) minimum and shall comply with 703.4.

1003.2.3 Fare Machines and Gates. Self-service fare vending, collection, and adjustment machines shall comply with 707. Where self-service fare vending, collection, and adjustment machines are provided for the use of the public, at least one *accessible* machine of each type provided shall be provided at each *accessible* point of entry or exit. Gates provided at fare collection machines required to be *accessible* shall comply with 404.

1003.2.4 Detectable Warnings. Platform edges bordering a drop-off and not protected by platform screens or guard rails shall have a *detectable warning* complying with 705.

1003.2.5 Rail-to-Platform Height. In stations covered by this section, rail-to-platform height shall be coordinated with the floor height of new vehicles so that the vertical difference, measured when the vehicle is at rest, is within plus or minus 5/8 inch (16 mm) under all normal passenger car load conditions. For rapid rail, light rail, commuter rail, high speed rail, and intercity rail systems in new stations, the horizontal gap, measured when the new vehicle is at rest, shall be 3 inches (75 mm) maximum. For automated guideway "people mover" transit systems, with a maximum speed of 20

miles per hour (12 kilometers per hour) the horizontal gap in new stations shall be 1 inch (25 mm) maximum.

Figure 1003.2.5

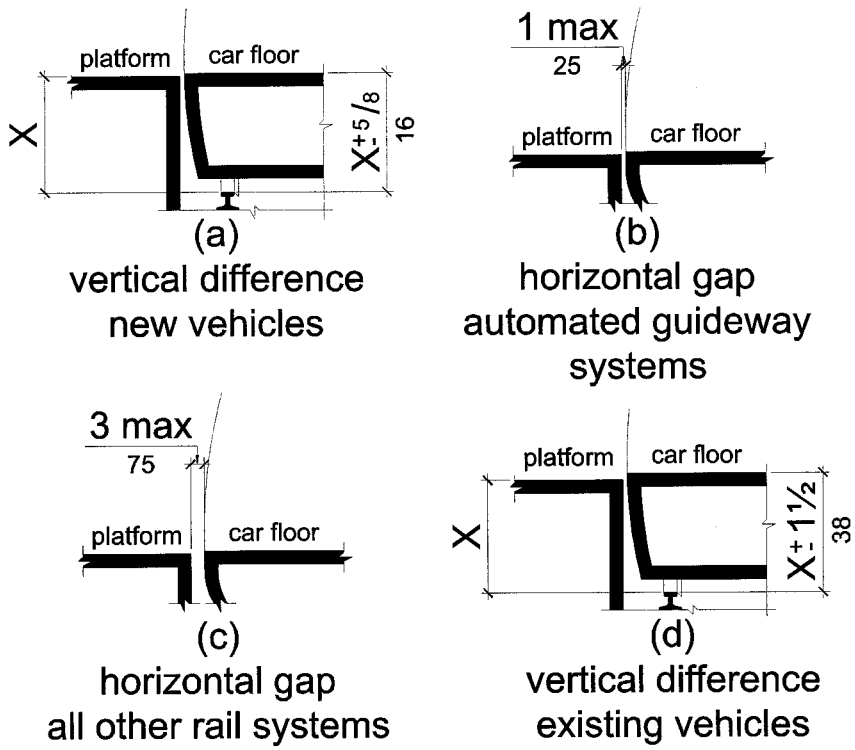

NOTE: x = rail-to-platform height

EXCEPTIONS: 1. Existing vehicles operating in new light rail, commuter rail, high speed rail, and intercity rail stations may have a vertical difference with respect to the new platform within plus or minus 1-1/2 inches (38 mm).

2. In light rail, commuter rail and intercity rail systems where it is not operationally or structurally feasible to meet the horizontal gap or vertical difference requirements, mini-high platforms, car-borne or platform-mounted lifts, *ramps* or bridge plates, or similar manually deployed devices meeting the applicable requirements of 36 CFR part 1192, or 49 CFR part 38 shall suffice.

1003.2.6 TTYs. Where a public pay telephone is provided in a transit *facility* (as defined by the Department of Transportation) at least one public *TTY* complying with 704.4 shall be provided. Where one or more public pay telephones serve a particular *entrance* to a transit *facility*, at least one *TTY* telephone complying with 704.4 shall be provided to serve that *entrance*.

1003.2.7 Track Crossings. Where it is necessary to cross tracks to reach boarding platforms, the route surface shall be level with the rail top at the outer edge and between the rails, except for a 2-1/

2 inch (65 mm) maximum gap on the inner edge of each rail to permit passage of wheel flanges. Where gap reduction is not practicable, an above-grade or below-grade *accessible route* shall be provided.

Figure 1003.2.7

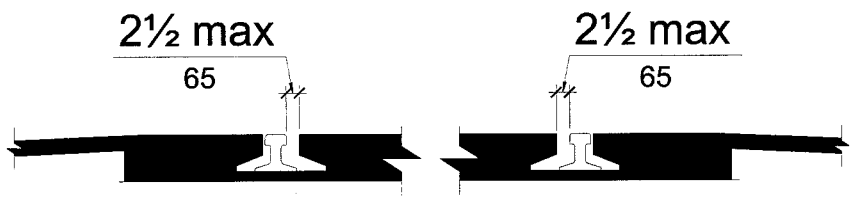

1003.2.8 Public Address Systems. Where public address systems are provided to convey information to the public in terminals, stations or other *facilities*, a means of conveying the same or equivalent information to persons with hearing loss or who are deaf shall be provided.

1003.2.9 Clocks. Where clocks are provided for use by the public, the clock face shall be uncluttered so that its *elements* are clearly visible. Hands, numerals and digits shall contrast with the background either light-on-dark or dark-on-light. Where clocks are installed overhead, numerals and digits shall comply with 703.4.

1003.2.10 Escalators. Where provided in below grade stations, escalators shall have a clear width of 32 inches (815 mm) minimum.

1003.2.11 Direct Connections. In addition to the requirements of 1003.2.1, direct connections to other facilities shall be *accessible* and have an *accessible route* complying with 402 from the point of connection to boarding platforms and all transportation system *elements* required to be *accessible*. Any *elements* provided to facilitate future direct connections shall be on an *accessible route* connecting boarding platforms and all transportation system *elements* required to be *accessible*.

1003.3 Existing Facilities: Key Stations. Rapid, light and commuter rail key stations, as defined under criteria established by the Department of Transportation in subpart C of 49 CFR part 37, and existing intercity rail stations shall comply with 1003.3.

1003.3.1 Accessible Route. *Accessible routes* from an *accessible entrance* to those areas necessary for use of the transportation system shall be provided. The *accessible route* shall include the features specified in 1003.2, except that escalators shall not be required to comply with 1003.2.10. Where *technical infeasibility* in existing stations requires the *accessible route* to lead from the *public way* to a paid area of the transit system, an *accessible* fare collection machine complying with 1003.2.3 shall be provided along such *accessible route*.

1003.3.2 Rail-to-Platform Height. In light rail and commuter rail key stations, the platform or a portion thereof and the vehicle floor shall be coordinated so that the vertical difference, measured when the vehicle is at rest, is within plus or minus 1-1/2 inches (38 mm) under all normal passenger

load conditions, and the horizontal gap, measured when the vehicle is at rest, is 3 inches (75 mm) maximum for at least one door of each vehicle or car required to be *accessible* by 49 CFR part 37.

EXCEPTIONS: 1. Existing vehicles retrofitted to meet the requirements of 49 CFR 37.93 (one-car-per-train rule) shall be coordinated with the platform such that, for at least one door, the vertical difference between the vehicle floor and the platform, measured when the vehicle is at rest with 50 percent normal passenger capacity, is within plus or minus 2 inches (51 mm) and the horizontal gap is 4 inches (100 mm) maximum.

Figure 1003.3.2 Exception 1

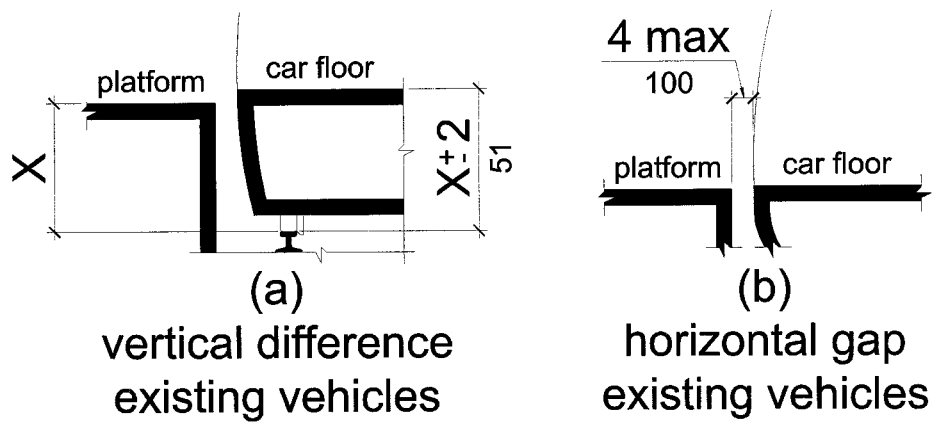

NOTE: X = rail-to-platform height

2. Where it is not structurally or operationally feasible to meet the horizontal gap or vertical difference requirements, mini-high platforms, car-borne or platform mounted lifts, *ramps* or bridge plates, or similar manually deployed devices, meeting the applicable requirements of 36 CFR Part 1192 shall suffice.

1003.3.3 Direct Connections. In addition to the requirement of 1003.3.1, new direct connections to other *facilities* shall be *accessible* and, shall have an *accessible route* complying with 402 from the point of connection to boarding platforms and all transportation system *elements* required to be *accessible*. Any *elements* provided to facilitate future direct connections shall be on an *accessible route* connecting boarding platforms and all transportation system *elements* required to be *accessible*.

1004 Airports

1004.1 New Construction. New construction of airports shall comply with 1004.

1004.2 TTYs. Where public pay telephones are provided, at least one *TTY* shall be provided in compliance with 704.4. Additionally, if four or more public pay telephones are located in a main terminal

outside the security areas, a concourse within the security areas, or a baggage claim area in a terminal, at least one public *TTY* complying with 704.4 shall also be provided in each such location.

1004.3 Terminal Information Systems. Terminal information systems that broadcast information to the public through a public address system shall provide a means to provide the same or equivalent information to persons with a hearing loss or who are deaf.

1004.4 Clocks. Where clocks are provided for use by the public, the clock face shall be uncluttered so that its *elements* are clearly visible. Hands, numerals and digits shall contrast with their background either light-on-dark or dark-on-light. Where clocks are installed overhead, numerals and digits shall comply with 703.4.

CHAPTER 11: RESIDENTIAL FACILITIES

1101 General

1101.1 Scope. Every residential *facility* containing *dwelling units* shall comply with the applicable provisions of Chapters 2 through 10 and the applicable provisions of this chapter.

1102 Accessible Dwelling Units

1102.1 General. *Accessible dwelling units* shall comply with 1102.

1102.2 Primary Entrance. The primary *entrance* to an *accessible dwelling unit* shall be located on an *accessible route* from *accessible common use* or *public use* areas. The primary *entrance* shall not be to a bedroom.

1102.3 Accessible Route. *Accessible route*s within *accessible dwelling units* shall comply with 1102.3.

EXCEPTIONS: 1. Exterior *spaces* less than 30 inches (760 mm) in depth or width shall comply with 1102.3.1, 1102.3.3, 302 and 303.
2. Unfinished attics and unfinished basements shall not be required to comply with this section.

1102.3.1 Location. At least one *accessible route* shall connect all spaces and *elements* which are a part of the *dwelling unit*. Where only one *accessible route* is provided, it shall not pass through restrooms, closets or similar *spaces*.

1102.3.2 Wheelchair Turning Space. All rooms served by an *accessible* route shall provide a *wheelchair* turning *space* complying with 304.

1102.3.3 Components. *Accessible routes* shall consist of one or more of the following *elements*: floor or *ground surfaces* with a slope not steeper than 1:20, *ramps*, elevators, and *wheelchair* (platform) lifts.

1102.4 Walking Surfaces. Walking surfaces that are part of an *accessible route* shall comply with 403.

1102.5 Doors and Doorways. The primary *entrance* door to the *dwelling unit*, and all other doorways intended for user passage, shall comply with 404.

Advisory 1102.5
In addition to the requirements for *accessible dwelling units*, at least one *entrance* door to each *dwelling unit* that is not required by this part to be *accessible* should have a 32 inch (815 mm) clear opening. In in*accessible dwelling units*, interior doors that are intended for user passage should provide a nominal 32-inch clear opening. Where units are not required to be *accessible*, a 34-inch door provides an acceptable nominal 32-inch clear opening.

1102.6 Ramps. *Ramps* shall comply with 405.

1102.7 Private Residence Elevators. Private residence elevators shall comply with 1102.7and with ASME/ANSI A17.1.

EXCEPTION: Elevators complying with 407 shall be permitted.

1102.7.1 Automatic Operation. Elevator operation shall be automatic. Each car shall automatically stop at a floor landing within a tolerance of 1/2 inch (13 mm) under rated loading to zero loading conditions.

1102.7.2 Call Buttons. Call buttons at elevator landings shall comply with 309.3. Call buttons shall be 3/4 inch (19 mm) minimum in the smallest dimension.

1102.7.3 Doors and Gates. Elevator car and hoistway doors and gates shall comply with 404, except that the maneuvering clearances required by 404.2.4.1 for approaches to the push side of swinging doors shall not apply. Elevator car doors and gates shall be power operated. For elevators with a car that has more than one opening, the hoistway doors and gates shall be permitted to be of the manual-open, self-close type. Elevators with a single opening car shall have low-energy power-operated hoistway doors and gates. Power operated doors and gates shall comply with ANSI/BHMA A156.19 and shall remain open for 20 seconds minimum when activated.

1102.7.4 Inside Dimensions of Elevator Cars. Elevator cars shall provide a clear floor *space* complying with 305. Car gates or doors shall be positioned at the narrow end of the clear floor *space*. The clearance between the car platform sill and the edge of any hoistway landing shall be 1-1/4 inches (32 mm) maximum.

1102.7.5 Floor Surfaces. Floor surfaces in elevator cars shall comply with 302 and 303.

1102.7.6 Illumination Levels. The level of illumination at the car controls, platform, and car threshold and landing sill shall be 5 footcandles (54 lux) minimum.

1102.7.7 Car Controls. Elevator car controls shall comply with 1102.7.7.

1102.7.7.1 Buttons. Control buttons shall be 3/4 inch (19 mm) minimum in their smallest dimension. Control buttons shall be raised or flush.

Figure 1102.7.7.1

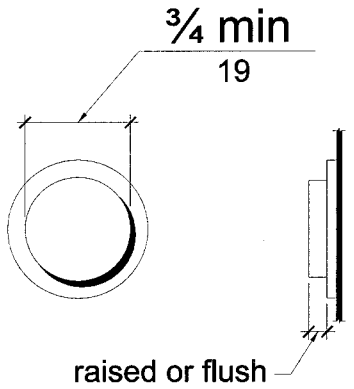

1102.7.7.2 Height. Buttons with floor designations shall comply with 309.3.

1102.7.7.3 Location. Controls shall be on a side wall, 12 inches (305 mm) minimum from any adjacent wall.

Figure 1102.7.7.3

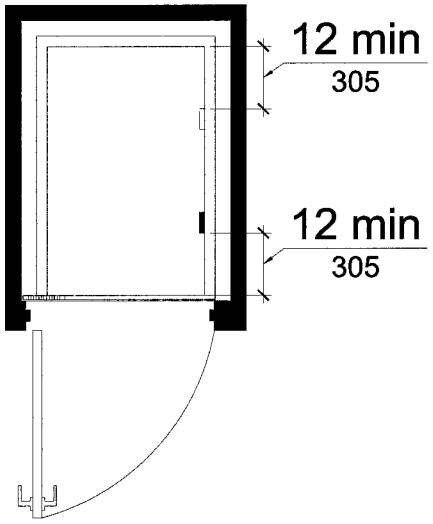

1102.7.8 Emergency Communications. A telephone and emergency signal device shall be provided in the car. The telephone and emergency signaling device shall comply with 309.3. If the device is in a closed compartment, the compartment door hardware shall comply with 309. The telephone cord shall be 29 inches (735 mm) long minimum.

1102.8 Wheelchair Lifts. *Wheelchair* (platform) lifts shall comply with ASME/ANSI A17.1 and with 408.

1102.9 Operable Parts. Lighting controls, electrical switches and receptacles, environmental controls, appliance controls, plumbing fixture controls, and user controls for security or intercom systems shall comply with 309.

EXCEPTIONS: 1. Electrical receptacles serving a dedicated use shall be not be required to comply with 309.
2. A single outlet shall be permitted to be inaccessible where all of the following conditions are met:
(a) the outlet is above a length of countertop that is uninterrupted by a sink or appliance;
(b) at least one receptacle complying with 1102.9 is provided for that length of countertop; and
(c) all other receptacles provided for that length of countertop comply with 1102.9.
3. Floor electrical receptacles shall be permitted to be inaccessible.
4. HVAC diffusers shall be permitted to be inaccessible.
5. Controls mounted on range hoods shall be permitted to be inaccessible if *accessible* redundant controls are provided.
6. Ceiling fan mounted controls shall be permitted to be inaccessible.

1102.10 Laundry Equipment. Washing machines and clothes dryers shall comply with 611.

1102.11 Toilet and Bathing Facilities. All toilet *facilities* and bathing *facilities* shall comply with 1102.11.

1102.11.1 Doors. Doors shall not swing into the clear floor or ground *space* or clearance for any fixture.

EXCEPTION: Where a clear floor or ground *space* complying with 305.3 is provided within the room, beyond the arc of the door swing, the door shall be permitted to swing into clear floor or ground *space* or clearance for fixtures.

1102.11.2 Overlap. Clear floor or ground *spaces*, clearances, and *wheelchair* turning *spaces* shall be permitted to overlap.

1102.11.3 Lavatory. Lavatories shall comply with 606.

EXCEPTION: Cabinetry shall be permitted under the lavatory provided the following conditions are met:
(a) the cabinetry can be removed without removal or replacement of the lavatory;
(b) the finish floor extends under the cabinetry; and

(c) the walls behind and surrounding cabinetry are finished.

Advisory 1102.11.3 Exception
Walls surrounding cabinetry must be finished so that when the front facing cabinet is removed, no additional finishing work is required.

1102.11.4 Mirrors. Mirrors above lavatories shall have the bottom edge of the reflecting surface 40 inches (1015 mm) maximum above the floor or ground.

Figure 1102.11.4

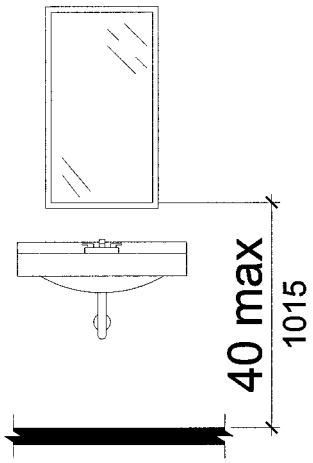

1102.11.5 Water Closet. Water closets shall comply with 1102.11.5.

1102.11.5.1 Location. The water closet shall be positioned with a wall to the rear and to one side. The centerline of the water closet shall be 16 inches (405 mm) minimum and 18 inches (455 mm) maximum from the side wall.

Figure 1102.11.5.1

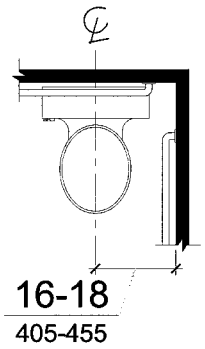

1102.11.5.2 Clearance. Clearance around the water closet shall comply with 1102.11.5.2.

1102.11.5.2.1 Parallel Approach. Where only a parallel approach is provided to the water closet, the clearance shall be 56 inches (1420 mm) minimum, measured perpendicular from the rear wall, and 48 inches (1220 mm) minimum, measured perpendicular from the side wall. A lavatory complying with 1102.11.3 shall be permitted on the rear wall, 18 inches (455 mm) minimum from the water closet centerline.

Figure 1102.11.5.2.1

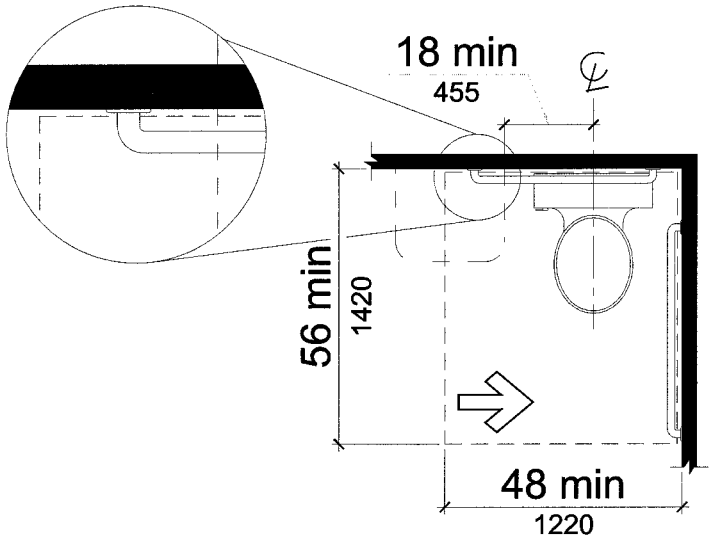

1102.11.5.2.2 Forward Approach. Where only a forward approach is provided to the water closet, the clearance shall be 66 inches (1675 mm) minimum, measured perpendicular from the rear wall, and 48 inches (1220 mm) minimum, measured perpendicular from the side wall. A lavatory complying with 1102.11.3 shall be permitted on the rear wall, 18 inches (455 mm) minimum from the water closet centerline.

Figure 1102.11.5.2.2

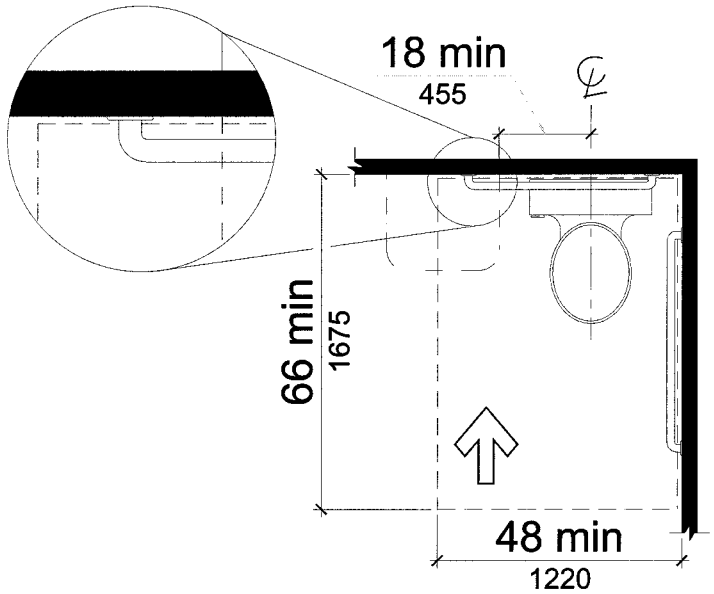

1102.11.5.2.3 Parallel and Forward Approach. Where both a parallel and a forward approach are provided to the water closet, the clearance shall be 56 inches (1420 mm) minimum, measured perpendicular from the rear wall, and 60 inches (1525 mm) minimum,

measured perpendicular from the side wall. No fixtures or obstructions, other than the water closet, shall be within the clearance.

Figure 1102.11.5.2.3

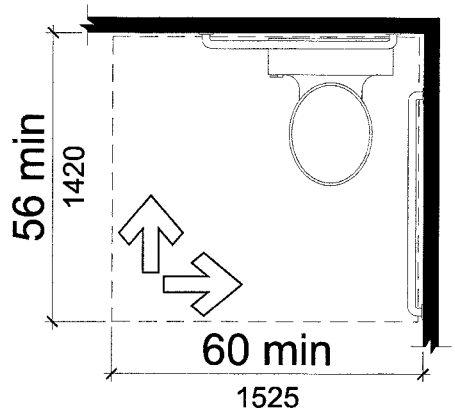

1102.11.5.3 Height. The top of the toilet seat shall be 15 inches (380 mm) minimum and 19 inches (485 mm) maximum above the floor or ground.

Figure 1102.11.5.3

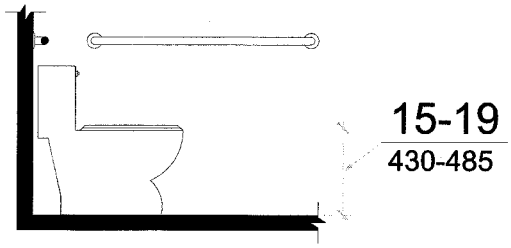

1102.11.5.4 Grab Bars. Grab bars complying with 604.5 shall be provided.

EXCEPTION: Grab bars shall not be required where reinforcement has been provided in walls to permit the installation of grab bars complying with 604.5.

Advisory 1102.11.5.4 Exception
Reinforcement must be sufficient to permit the installation of rear and side wall grab bars that fully meet all accessibility requirements including, but not limited to, required length, installation height, and structural strength.

1102.11.5.5 Flush Controls. Hand operated flush controls shall comply with 1102.9.

1102.11.6 Bathtub. Bathtubs shall comply with 607.

EXCEPTIONS: 1. The removable in-tub seat required by 607.3 shall not be required.
2. Grab bars shall not be required, where reinforcement has been provided in walls to permit the installation of grab bars complying with 607.4.

1102.11.7 Shower. Showers shall comply with 608.

EXCEPTIONS: 1. A shower seat shall not be required in transfer-type showers, where reinforcement has been provided in a wall to permit the installation of a seat complying with 610.3.
2. Grab bars shall not be required, where reinforcement has been provided in walls to permit the installation of grab bars complying with 608.3.

1102.12 Kitchens. Kitchens shall comply with 1102.12.

1102.12.1 Clearance. Clearance complying with 1102.12.1.1 and 1102.12.1.2 shall be provided.

1102.12.1.1 Galley. In kitchens with counters, appliances or cabinets on two opposing sides, clearance between all opposing base cabinets, counter tops, appliances, or walls within kitchen work areas shall be 40 inches (1015 mm) minimum.

Advisory 1102.12.1.1
The 40 inches (1015 mm) minimum is measured from the furthest projecting face of all opposing base cabinets, countertops, appliances, or walls, excluding hardware.

1102.12.1.2 U-Shaped. In kitchens with counters, appliances, or cabinets on three contiguous sides, clearance between all opposing base cabinets, countertops, appliances, or walls within kitchen work areas shall be 60 inches (1525 mm) minimum.

1102.12.2 Clear Floor or Ground Space. Clear floor or ground *spaces* required by 1102.12.3 through 1102.12.6 shall comply with 305.

1102.12.3 Work Surface. At least one 30 inches (760 mm) wide minimum section of counter shall provide a work surface that complies with 1102.12.3.

Figure 1102.12.3

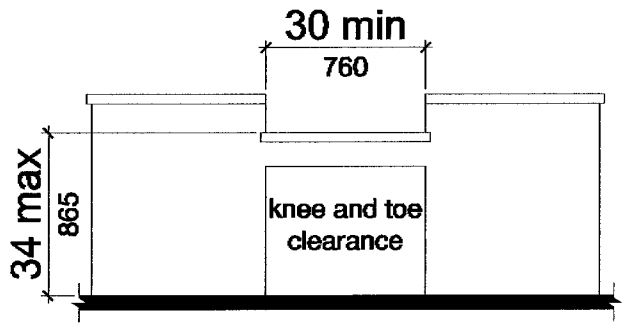

1102.12.3.1 Clear Floor or Ground Space. A clear floor *space* complying with 305 positioned for a forward approach shall be provided. The clear floor or ground *space* shall be centered on the work surface. The clear floor or ground *space* shall provide knee and toe clearance complying with 306.

EXCEPTION: Cabinetry shall be permitted under the work surface, where such cabinetry can be removed without removal or replacement of the work surface, where the finish floor extends under such cabinetry, and where walls behind and surrounding cabinetry are finished.

1102.12.3.2 Height. The work surface shall be 34 inches (865 mm) maximum above the floor or ground.

EXCEPTION: A counter that is adjustable to provide a work surface at variable heights 29 inches (735 mm) minimum and 36 inches (915 mm) maximum shall be permitted.

1102.12.3.3 Exposed Surfaces. There shall be no sharp or abrasive surfaces under the work surface counters.

1102.12.4 Sink. The sink and surrounding counter shall comply with 1102.12.4. The width of the sink and surrounding counter shall be 30 inches (760 mm) minimum.

Figure 1102.12.4

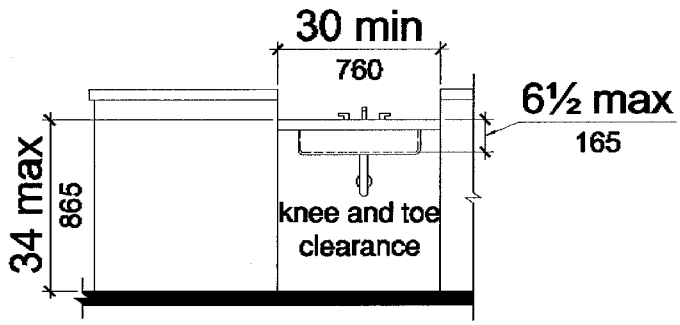

1102.12.4.1 Clear Floor or Ground Space. A clear floor or ground *space* complying with 305 and positioned for a forward approach shall be provided. The clear floor or ground *space* shall be centered on the sink bowl. The clear floor or ground *space* shall provide knee and toe clearance complying with 306.

EXCEPTIONS: 1. Cabinetry shall be permitted under the sink, where such cabinetry can be removed without removal or replacement of the sink, where the finish floor extends under such cabinetry, and where walls behind and surrounding cabinetry are finished.
2. Adjustable-height sinks complying with 1102.12.4.2 are not required to provide knee clearance where placed at heights below 34 inches (865 mm).

1102.12.4.2 Height. The sink and surrounding counter shall be 34 inches (865 mm) maximum above the floor or ground, measured to the higher of the fixture rim or the counter surface.

EXCEPTION: Sink and counter that is adjustable to variable heights 29 inches (735 mm) minimum and 36 inches (915 mm) maximum shall be permitted where rough-in plumbing permits connections of supply and drain pipes for sinks mounted at the height of 29 inches (735 mm).

1102.12.4.3 Sink Bowl. The depth of a sink bowl shall be 6-1/2 inches (165 mm) maximum measured from the higher of the fixture rim or the counter surface. Multiple-compartment sinks shall have at least one compartment complying with this requirement.

1102.12.4.4 Faucets. Faucets shall comply with 309.

1102.12.4.5 Exposed Pipes and Surfaces. Water supply and drain pipes under sinks shall be insulated or otherwise configured to protect against contact. There shall be no sharp or abrasive surfaces under sinks.

1102.12.5 Kitchen Storage. Cabinets shall have a clear floor or ground *space* complying with 305, positioned for parallel or forward approach.

1102.12.6 Appliances. Where provided, kitchen appliances shall comply with 1102.12.6.

1102.12.6.1 Clear Floor or Ground Space. A clear floor or ground *space* complying with 305 positioned for parallel or forward approach shall be provided at each kitchen appliance. Clear floor or ground *spaces* shall be permitted to overlap.

1102.12.6.2 Operable Parts. All appliance controls shall comply with 1102.9.

1102.12.6.3 Dishwasher. Clear floor or ground *space* shall be positioned adjacent to the dishwasher door. The dishwasher door, in the open position, shall not obstruct the clear floor or ground *space* for the dishwasher or the sink.

1102.12.6.4 Range or Cooktop. Where a forward approach is provided, the clear floor or ground *space* shall provide knee and toe clearance complying with 306. Where knee and toe *space* is provided, the underside of the range or cooktop shall be insulated or otherwise configured to prevent burns, abrasions, or electrical shock. The location of controls shall not require reaching across burners.

1102.12.6.5 Oven. Ovens shall have controls on front panels, to the side of the door.

1102.12.6.5.1 Side-Hinged Door Ovens. Side-hinged door ovens shall have the work surface required by 1102.12.3 positioned adjacent to the latch side of the oven door.

1102.12.6.5.2 Bottom-hinged Door Ovens. Bottom-hinged door ovens shall have the work surface required by 1102.12.3 positioned adjacent to one side of the door.

1102.12.6.6 Refrigerator/Freezer. Combination refrigerators and freezers shall have at least 50 percent of the freezer *space* 54 inches (1370 mm) maximum above the floor or ground. The clear floor or ground *space* shall be positioned for a parallel approach to the *space* dedicated to a refrigerator/freezer with the centerline of the clear floor or ground *space* offset 24 inches (610 mm) maximum from the centerline of the dedicated *space*.

1102.12.6.7 Trash Compactor. A clear floor or ground *space* complying with 305 positioned for parallel or forward approach shall be provided.

1102.13 Windows. Where glazed openings are provided in *accessible* rooms or *spaces* for operation by the occupants, at least one opening shall comply with 309. In *accessible* rooms or *spaces,* each glazed opening required to be operable by the local *administrative authority* shall comply with 309.

1102.14 Storage Facilities. Where storage *facilities* are provided, they shall comply with 1102.14.

EXCEPTION: Kitchen cabinets shall comply with 1102.12.5.

1102.14.1 Clear Floor or Ground Space. A clear floor or ground *space* complying with 305 positioned for a parallel or forward approach shall be provided at each storage *facility.*

1102.14.2 Height. A portion of the storage area of each storage *facility* shall accommodate a forward reach or side reach complying with 308.

1102.14.3 Operable Parts. *Operable parts* on storage *facilities* shall comply with 309.

1103 Dwelling Units with Accessible Communication Features

1103.1 General. *Dwelling units* required to have *accessible* communication features shall comply with 1103.

1103.2 Dwelling Unit Smoke Detection. Where provided, *dwelling unit* smoke detection shall include audible notification complying with NFPA 72.

1103.3 Building Fire Alarm System. Where a *building* fire alarm system is provided, the system wiring shall be extended to a point within the *dwelling unit* in the vicinity of the *dwelling unit* smoke detection system.

1103.4 Visual Alarm Appliances. Visible notification appliances, where provided within the *dwelling unit* as part of the *dwelling unit* smoke detection system or the *building* fire alarm system, shall comply with 1103.4.

1103.4.1 Appliance. Visual alarm appliance shall comply with NFPA 72.

1103.4.2 Activation. All visual alarm appliances provided within the *dwelling unit* for smoke detection notification shall be activated upon smoke detection. All visual alarm appliances provided within the *dwelling unit* for *building* fire alarm notification shall be activated upon activation of the *building* fire alarm in the portion of the *building* containing the *dwelling unit.*

1103.4.3 Interconnection. The same visual alarm appliances shall be permitted to provide notification of *dwelling unit* smoke detection and *building* fire alarm activation.

1103.4.4 Prohibited Use. Visual alarm appliances used to indicate *dwelling unit* smoke detection or *building* fire alarm activation shall not be used for any other purpose within the *dwelling unit.*

1103.5 Dwelling Unit Primary Entrance. Communication features shall be provided at the *dwelling unit* primary *entrance* complying with 1103.5.

1103.5.1 Notification. A hard-wired electric doorbell shall be provided. A button or switch shall be provided outside the *dwelling unit* primary *entrance.* Activation of the button or switch shall initiate an audible tone and visible signal within the *dwelling unit.* Visible doorbell signals that are located in the sleeping areas shall have controls to deactivate the signal.

1103.5.2 Identification. A means for visually identifying a visitor without opening the *dwelling unit* entry door shall be provided. Peepholes, where used, shall provide a minimum 180 degree range of view.

Advisory 1103.5.2
In doors, peepholes that include prisms clarify the image and should offer a wide-angle view of the hallway or exterior for both standing persons and *wheelchair* users. Such peepholes can be placed at a standard height and permit a view from several feet from the door.

1103.6 Site, Building or Floor Entrance. Where a system permitting voice communication between a visitor and the occupant of the *dwelling unit* is provided at a location other than the *dwelling unit* entry door, the system shall comply with 1103.6.

1103.6.1 Common Use or Public Use System Interface. The *common use* or *public use* system interface shall include the capability of supporting voice and *TTY* communication with the *dwelling unit* interface.

1103.6.2 Dwelling Unit Interface. The *dwelling unit* system interface shall include a telephone jack capable of supporting voice and *TTY* communication with the *common use* or *public use* system interface.

1103.7 Closed-Circuit Communication Systems. Where a closed-circuit communication system is provided, the *common use* or *public use* system interface shall comply with 1103.6.1, and the *dwelling unit* system interface in units required to have *accessible* communication features shall comply with 1103.6.2.

[FR Doc. 99–29250 Filed 11–15–99; 8:45 am]
BILLING CODE 8150–01–C