AUTHENTICATED
U.S. GOVERNMENT
INFORMATION
GPO

Federal Register

Friday,
March 31, 2000

Part II

Architectural and Transportation Barriers Compliance Board

36 CFR Part 1194

Electronic and Information Technology Accessibility Standards; Proposed Rule

ARCHITECTURAL AND TRANSPORTATION BARRIERS COMPLIANCE BOARD

36 CFR Part 1194

[Docket No. 2000–01]

RIN 3014–AA25

Electronic and Information Technology Accessibility Standards

AGENCY: Architectural and Transportation Barriers Compliance Board.

ACTION: Notice of proposed rulemaking.

SUMMARY: The Architectural and Transportation Barriers Compliance Board (Access Board) proposes accessibility standards for electronic and information technology covered by section 508 of the Rehabilitation Act Amendments of 1998. Section 508 requires the Access Board to publish standards setting forth a definition of electronic and information technology and the technical and functional performance criteria necessary for accessibility for such technology. Section 508 requires that when Federal agencies develop, procure, maintain, or use electronic and information technology, they shall ensure that the electronic and information technology allows Federal employees with disabilities to have access to and use of information and data that is comparable to the access to and use of information and data by Federal employees who are not individuals with disabilities, unless an undue burden would be imposed on the agency. Section 508 also requires that individuals with disabilities, who are members of the public seeking information or services from a Federal agency, have access to and use of information and data that is comparable to that provided to the public who are not individuals with disabilities, unless an undue burden would be imposed on the agency.

DATES: Comments should be received by May 30, 2000; however, late comments will be considered to the extent practicable.

ADDRESSES: Comments should be sent to the Office of Technical and Information Services, Architectural and Transportation Barriers Compliance Board, 1331 F Street NW., suite 1000, Washington, DC 20004–1111. Comments sent by e-mail will be considered only if they include the full name and address of the sender in the text. E-mail comments should be sent to section508nprm@access-board.gov. Comments will be available for inspection at the above address from 9:00 a.m. to 5:00 p.m. on regular business days.

FOR FURTHER INFORMATION CONTACT: Doug Wakefield, Office of Technical and Information Services, Architectural and Transportation Barriers Compliance Board, 1331 F Street, NW., suite 1000, Washington, DC 20004–1111. Telephone number (202) 272–5434 extension 139 (voice); (202) 272–5449 (TTY). Electronic mail address: wakefield@access-board.gov.

SUPPLEMENTARY INFORMATION:

Availability of Copies and Electronic Access

Single copies of this publication may be obtained at no cost by calling the Access Board's automated publications order line (202) 272–5434, by pressing 2 on the telephone keypad, then 1, and requesting publication S–38 (Electronic and Information Technology Accessibility Standards Notice of Proposed Rulemaking). Persons using a TTY should call (202) 272–5449. Please record a name, address, telephone number and request publication S–38. This document is available in alternate formats upon request. Persons who want a copy in an alternate format should specify the type of format (cassette tape, Braille, large print, or ASCII disk). This document is also available on the Board's Internet site (http://www.access-board.gov/rules/508nprm.htm).

This proposed rule is based on recommendations of the Board's Electronic and Information Technology Access Advisory Committee. The report is available on the Board's Internet site (http://www.access-board.gov/pubs/eitaacrpt.htm).

Background

On August 7, 1998, the President signed into law the Workforce Investment Act of 1998, which includes the Rehabilitation Act Amendments of 1998. Section 508 of the Rehabilitation Act Amendments requires that when Federal agencies develop, procure, maintain, or use electronic and information technology, they shall ensure that the electronic and information technology allows Federal employees with disabilities to have access to and use of information and data that is comparable to the access to and use of information and data by Federal employees who are not individuals with disabilities, unless an undue burden would be imposed on the agency.[1] Section 508 also requires that individuals with disabilities, who are members of the public seeking information or services from a Federal agency, have access to and use of information and data that is comparable to that provided to the public who are not individuals with disabilities.

Section 508 was originally added to the Rehabilitation Act in 1986. It required the Secretary of Education and the Administrator of the General Services Administration to develop and establish guidelines for Federal agencies for electronic and information technology accessibility and required that such guidelines be revised, as necessary, to reflect technological advances or changes.[2] Section 508 also required each Federal agency to comply with the guidelines. However, there was no enforcement mechanism to provide for compliance. The changes to section 508 contained in the Rehabilitation Act Amendments of 1998 were designed to strengthen the previous law.

Access Board Responsibilities

Section 508(a)(2)(A) of the Rehabilitation Act Amendments of 1998 requires the Architectural and Transportation Barriers Compliance Board (Access Board)[3] to publish standards setting forth a definition of electronic and information technology and the technical and functional performance criteria necessary for accessibility for such technology. If an agency determines that meeting these standards, when procuring electronic and information technology, imposes an undue burden, it must explain why meeting these standards creates an undue burden.

The definition of electronic and information technology is required to be

[1] Section 508 does not apply to national security systems, as that term is defined in section 5142 of the Clinger-Cohen Act of 1996 (40 U.S.C. 1452).

[2] In October 1987, the Department of Education and the General Services Administration (GSA) issued section 508 guidelines which addressed management responsibilities and functional performance specifications for input, output, and documentation access to electronic equipment. On January 1, 1991, after receiving further comment from agencies, vendors, and individuals with disabilities, the GSA issued Bulletin C–8 containing these guidelines as amended, in the Federal Information Resources Management Regulations (FIRMR). In 1996 the FIRMR was eliminated.

[3] The Access Board is an independent Federal agency established by section 502 of the Rehabilitation Act (29 U.S.C. 792) whose primary mission is to promote accessibility for individuals with disabilities. The Access Board consists of 25 members. Thirteen are appointed by the President from among the public, a majority of who are required to be individuals with disabilities. The other twelve are heads of the following Federal agencies or their designees whose positions are Executive Level IV or above: The departments of Health and Human Services, Education, Transportation, Housing and Urban Development, Labor, Interior, Defense, Justice, Veterans Affairs, and Commerce; the General Services Administration; and the United States Postal Service.

consistent with the definition of information technology in section 5002(3) of the Clinger-Cohen Act of 1996.[4] (40 U.S.C. 1401(3)). Information technology under that law means ''any equipment or interconnected system or subsystem of equipment, that is used in the automatic acquisition, storage, manipulation, management, movement, control, display, switching, interchange, transmission, or reception of data or information'' by a Federal agency.

In developing its standards, the Access Board is required to consult with various Federal agencies,[5] the electronic and information technology industry, and appropriate public or nonprofit agencies or organizations, including organizations representing individuals with disabilities. The Access Board is also required to periodically review and, as appropriate, amend the standards to reflect technological advances or changes in electronic and information technology. The General Services Administration and the Access Board are required to provide technical assistance to individuals and Federal agencies concerning the requirements of section 508.

Other Section 508 Requirements

The Access Board was required to publish standards by February 7, 2000. For several reasons, the Board has not met that statutory deadline. Because the Board was required to consult with various affected interests, it created a Federal advisory committee. The advisory committee met from October 1998 through May 1999. Since then, the Board has met through an ad hoc group consisting of several Board members and Federal agency representatives to review the committee's recommendations and develop the proposed rule. Additionally, the Board contracted to prepare the regulatory assessment for the proposed rule. After the Board submitted the proposed rule to the Office of Management and Budget (OMB) for review under Executive Order 12866, OMB distributed the proposed rule twice to the Chief Information Officers for review and comment. The Board has also been coordinating its efforts with the Federal Acquisition Regulatory Council. Section 508(a)(3) provides that within six months after the Board publishes its standards, the Federal Acquisition Regulatory Council is required to revise the Federal Acquisition Regulation, and each Federal agency is required to revise the Federal procurement policies and directives under its control to incorporate the Board's standards.[6] The Board expects that the final standards and the revised Federal Acquisition Regulation will be issued at the same time.

Because of the delay in publishing the standards, the Board is considering making the standards effective six months after publication in the **Federal Register**. The Board believes that this action will provide Federal agencies with an opportunity to more fully understand these new requirements and will allow manufacturers of electronic and information technology time to ensure that their products comply with the standards. The Board also believes that this action is consistent with the Congressional intent underlying section 508. As discussed above, Congress provided a six month period between the publication of the Board's standards and the incorporation of the standards in the Federal Acquisition Regulation. This six month period would have allowed Federal agencies to understand the standards and manufacturers time to ensure that their products would be accessible.

Question 1: The Board seeks comment on the advisability of making the standards effective six months after publication in the **Federal Register.** This action would not affect the right of individuals with disabilities to file complaints for electronic and information technology procured after August 7, 2000 since that right is established by the statute.

Section 508(a)(4) provides that if a Federal agency determines that compliance with the standards imposes an undue burden, any documentation by the agency supporting a procurement shall explain why compliance creates an undue burden. Additionally, when it is determined that compliance with the standards imposes an undue burden, the Federal agency shall provide individuals with disabilities with the information and data involved by an alternative means of access that allows the individual to use the information and data.[7]

Section 508(a)(6)(A) states that when the Federal government provides access to the public to information or data through electronic and information technology, a Federal agency is not required to make equipment available or to purchase equipment at a location other than that where the electronic and information technology is provided to the public. Also, specific accessibility-related software or the attachment of specific accessibility-related peripheral devices are not required to be installed at workstations of Federal employees without disabilities.[8]

Section 508(c) provides that by February 7, 1999, each Federal agency shall evaluate the extent to which the electronic and information technology of the agency is accessible to and usable by individuals with disabilities and submit a report containing the evaluation to the Attorney General.

Section 508(d) provides that by February 7, 2000, the Attorney General shall prepare and submit to the President a report containing information on and recommendations regarding the extent to which the electronic and information technology of the Federal government is accessible to and usable by individuals with disabilities.[9] By August 7, 2001, and every two years thereafter, the Attorney General shall submit to the President and Congress a report containing information on and recommendations regarding the state of Federal agency compliance with the requirements of section 508, including actions regarding individual complaints.

Section 508(f) provides that beginning August 7, 2000, any individual with a disability may file a complaint alleging that a Federal agency fails to comply with section 508 in providing accessible electronic and information technology.[10] Complaints shall be filed with the Federal agency alleged to be in noncompliance. The Federal agency receiving the complaint shall apply the complaint procedures established to implement section 504 of the Rehabilitation Act for resolving

[4] The Clinger-Cohen Act was designed to ensure consistency across Federal agencies in the acquisition, use, and disposal of information technology. It requires each Executive agency to establish a process to select, manage, and evaluate the results of their information technology investments; report annually to Congress on progress made toward agency goals; and link information technology performance measures to agency programs.

[5] The Access Board is required to consult with the Secretary of Education, the Administrator of General Services, the Secretary of Commerce, the Chairman of the Federal Communications Commission, the Secretary of Defense, and the head of any other Federal agency that the Access Board determines to be appropriate.

[6] Whenever the Access Board revises its standards, the Council is required to revise the Federal Acquisition Regulation, and each appropriate Federal agency is required to revise its procurement policies and directives within six months to incorporate the revisions.

[7] Section 508(a)(1)(B).

[8] Section 508(a)(6)(B).

[9] On April 2, 1999, the Department of Justice (DOJ) released its self-evaluation materials for section 508. The self-evaluations were required to be submitted to the DOJ by June 15, 1999. The final report was not available prior to the publication of this proposed rule. It will be available through the Department of Justice Section 508 Home Page (http://www.usdoj.gov/crt/508/508home.html).

[10] This provision applies only to electronic and information technology that is procured by a Federal agency on or after August 7, 2000.

allegations of discrimination in a federally conducted program or activity. Under section 504, individuals may also sue an agency in Federal court to correct an alleged violation.

Electronic and Information Technology Access Advisory Committee

This proposed rule is based on recommendations of the Electronic and Information Technology Access Advisory Committee (Committee or EITAAC). The Committee was convened by the Access Board in September 1998 to assist the Board in fulfilling its mandate under section 508.

On September 29, 1998, the Access Board published a notice appointing members to the Committee. 63 FR 51891 (September 29, 1998). Between October 1998 and May 1999, the Committee held 6 meetings, each of two working days in length, during which members worked to develop recommendations for implementing requirements under section 508. In selecting members of the Committee, the Access Board sought to ensure representation from all parties interested in the promulgation of electronic and information technology accessibility standards. The Committee was composed of representatives of the electronic and information technology industry; organizations representing the access needs of individuals with disabilities; and other persons affected by accessibility standards for electronic and information technology. Representatives of Federal agencies, including the departments of Commerce, Defense, Education, Justice, Veterans Affairs, the Federal Communications Commission, and the General Services Administration, served as ex-officio members or observers of the Committee. The following organizations served on the Committee:

American Council of the Blind
American Foundation for the Blind
Arkenstone, Inc.
Association of Access Engineering Specialists
Association of Tech Act Projects
Compaq
Easter Seals
Electronic Industries Alliance
FutureForms
Georgia Institute of Technology
IBM Special Needs Center
Information Technology Industries Council
Meeting the Challenge, Inc.
Microsoft Corporation
NCR Corporation
National Association of the Deaf
National Federation of the Blind
National Industries for the Blind
National Science Foundation
Pitney Bowes
Self Help for Hard of Hearing People, Inc.
Sun Microsystems
Trace Research and Development Center
United Cerebral Palsy Associations
WGBH National Center for Accessible Media
WebABLE! Solutions
World Wide Web Consortium, Web Accessibility Initiative

Each organization selected a principal member and an alternate. The Committee formed several subcommittees and task groups in which alternates and nonmembers were invited to participate. As a result, the actual group which developed the recommendations was broader than the formal membership. The result of the Committee's work was a report containing recommendations to the Access Board for implementing section 508 of the Rehabilitation Act Amendments of 1998. The Committee presented its report to the Board on May 12, 1999. This proposed rule is based primarily on the recommendations of chapters three ''Definitions'', four ''Section 508 Implementation'', and five ''Proposed Standards'' of the Committee report.

Section-by-Section Analysis

This section of the preamble contains a concise summary of the rule which the Access Board is proposing. The text of the proposed rule follows this section.

Subpart A—General

Section 1194.1 Purpose

This section describes the purpose of the standards which is to implement section 508 of the Rehabilitation Act Amendments of 1998. The goal of section 508 is to introduce accessibility features into mainstream electronic and information technology products purchased by the Federal government to reduce the need for individual, customized accommodations and to make those accommodations which are still needed more efficient and easier to implement.

Section 1194.2 Application

This section specifies what electronic and information technology is covered by the standards. Paragraph (a) states the general statutory requirement for electronic and information technology that must comply with the standards unless doing so would result in an undue burden. The term ''undue burden'' is defined at 1194.4, Definitions, and is discussed in the preamble under that section.

By statute, the enforcement provisions of section 508 apply only to products procured on or after August 7, 2000. (See section 508(f)(1)(B)). As a result, Section 508 does not authorize complaints or lawsuits to retrofit electronic and information technology products procured prior to August 7, 2000 to meet these standards. See a further discussion of the application of these standards to web sites maintained, developed, used or procured by the Federal government under 1194.23(c).

Paragraph (a)(1) states the statutory obligation of a Federal agency to make the information and data available by an alternative means when complying with the standards would result in an undue burden. For example, a Federal agency wishes to purchase a computer program that generates maps denoting regional demographics. If the agency determines that it would constitute an undue burden to purchase an accessible version of such a program, the agency would be required to make the information provided by the program available in an alternative means to users with disabilities. In addition, the requirements to make reasonable accommodations for the needs of an employee with a disability and to provide overall program accessibility under section 504 of the Rehabilitation Act also apply.

Paragraph (a)(2) sets forth the statutory requirement for an agency to document any claim of undue burden in a procurement. Such documentation must explain in detail which provision or provisions of this rule imposes an undue burden and the extent of such a burden. The agency should discuss each of the factors elaborated below which are to be considered an undue burden. By statute, the requirement to document an undue burden applies only to procurements.

Paragraph (b) applies this rule to electronic and information technology developed, procured, maintained, or used by an agency directly or used by a contractor pursuant to a contract with an agency. Consistent with section 5002(3)(C) of the Clinger-Cohen Act of 1996 (40 U.S.C. 1452) and as further discussed in 1194.3(b) below, products used by a contractor which are incidental to a contract are not covered by this rule. For example, a Federal agency enters into a contract to have a web site developed for the agency. The contractor uses its own office system to develop the web site. The web site is required to comply with this rule, however, the contractor's office system does not have to comply with these standards.

Paragraph (c) clarifies that procurement of products complying with this part is subject to commercial

availability. That is, an agency is not expected to procure products that have not been developed. Documentation of an undue burden is not required in this case. This section also applies the provisions of this part to products that will be available in time to meet delivery requirements, or are developed by or on behalf of the government. This is based on existing provisions in the Federal Acquisition Regulations (see 48 CFR 2.101, Definitions of Words and Terms: Commercial item, paragraph (b)). For example, an agency may be planning a major software upgrade to be installed in the next year. If advances in technology or performance will be available to render the software compliant in time to meet the installation requirement, the product will be considered commercially available, despite the fact that a compliant version was not available at the time of the original solicitation. Of course, products developed in response to a Government solicitation are expected to be fully compliant.

The determination of commercial availability is to be applied on a provision by provision basis. That is, each provision is judged independently. Agencies cannot claim a product as a whole is not commercially available because it fails to meet some of the applicable provisions of these standards. It must still meet those provisions that are commercially available.

For example, some pagers may be available with a vibrating alert, but no model has voice output. A Federal agency would still be required to purchase the model with the vibrator even though a model with all the features necessary for accessibility may not exist. Similarly, if a software program that meets all of the provisions of 1194.23(b) is not available, but one that meets most of the provisions is (*e.g.*, it does not provide 8 foreground and 8 background colors), the agency must purchase that product that meets most of the applicable software provisions. The software program as a whole is not excused from the standards because a program meeting all of the provisions is not commercially available.

Paragraph (d) explains how each section of this rule is to be applied. In general, the requirements in 1194.21, 1194.23 and 1194.25 are assumed to satisfy the functional performance criteria in 1194.27. Therefore, when evaluating the compliance of any product, first look to compliance with 1194.21, 1194.23 and 1194.25, then apply the performance criteria in 1194.27 to elements or technologies not covered in those sections and to the overall product functions. Where there is overlap, the specific provisions in 1194.21, 1194.23 and 1194.25 prevail over the general provisions in 1194.27.

In developing these standards, the Board considered the issue of when accessibility features must be built-in and when the product need only be compatible, that is, have the ability to add on assistive technology or accessible features in the future as needed. Because the goal of section 508 is to introduce accessibility features into mainstream electronic and information technology, the proposed standards require that the accessibility features be built-in where reasonable and appropriate given the nature of the product and its intended use. For example, the standards require that the accessibility features be built-in for information kiosks because the public cannot be expected to attach an assistive technology device each time the kiosk is used. Because copy machines seldom allow for the loading of special software or the attachment of accessibility related peripherals, the standards require that the accessible features be built-in.

In general, where accessibility features are not built-in, the standards require that the system be compatible to make those accommodations which are still needed more efficient and easier to implement. For example, workstations are subject to the statutory exception that assistive technology devices are not required at workstations of persons without a disability. The standards require that these systems be compatible with the addition of assistive technology on an as needed basis.

The following paragraphs delineate those provisions where accessibility features are required to be built-in and those which permit compatibility in lieu of built-in features.

Section 1194.21 contains general requirements to be applied to all products, regardless of the specific technology involved. For example, the prohibition on using color coding exclusively is applicable to kiosks, web pages, copiers, software applications, or any other product that controls a visual display. The requirements in section 1194.21 pertain to built-in features.

Section 1194.23 provides requirements for specific components, such as keypads, software, web applications, and telecommunications. All but the simplest products will likely have more than one component and the requirements in section 1194.23 are to be applied to each component. For example, the keypad of a single line telephone can generally be made accessible to a person with a visual impairment by having a standard key layout and placing a nib on the five key. The keypad of a multi-line telephone can be made accessible in a similar fashion but the telephone may have visual indicators for availability of different lines and hold status. Each component for which there is a specific provision must be evaluated for compliance with this section.

The requirements in 1194.23(a), (d)(6)–(9), (e) and (f) are written to ensure built-in accessibility of keyboard, keypads and other mechanically operated controls, telecommunications equipment and information kiosks. The requirements in 1194.23(b), (c) and (d)(1)–(5) will ensure that software applications, web pages and certain telecommunications features are compatible with assistive technology.

Section 1194.25 provides requirements for compatibility of products with assistive technology commonly used by individuals with disabilities. Since any specific product cannot necessarily be made accessible to all disabilities, it must be able to accommodate assistive technology. For example, all computers are not expected to be equipped with a refreshable Braille display, but they are expected to be compatible with such equipment. Assistive technology may be part of a reasonable accommodation required by section 501 or section 504 of the Rehabilitation Act in response to a request made by a person with a disability.

Section 1194.27 provides functional performance criteria for overall product evaluation and for technologies or components for which there is no specific requirement under other sections. As in the example of the multi-line telephone discussed above, the keypad has specific requirements under section 1194.23, but the other functions, such as line availability or status, must be evaluated by applying the performance criteria. These criteria are also intended to ensure that the individual accessible components work together to create an accessible product. Section 1194.27(a), (b), (c) and (e) allow for the support of assistive technology to satisfy the criteria, whereas section 1194.27 (d) and (f) are functions that must be built into a product.

Finally, section 1194.31 provides requirements for information, documentation, and support. Products may meet all of the technical requirements of this part, but will not be usable to a person with a disability if information about the accessible features or how to use them is not available in a format the individual can use. Obviously, the format is critical to

usability, since providing Braille to a person who does not read Braille is worthless, as is providing enhanced audio to a person who is deaf and does not rely on any residual hearing.

Section 1194.3 General Exceptions

This section provides general exceptions from the standards. Paragraph (a) provides an exception for telecommunications or information systems operated by agencies, the function, operation, or use of which involves intelligence activities, cryptologic activities related to national security, command and control of military forces, equipment that is an integral part of a weapon or weapons system, or systems which are critical to the direct fulfillment of military or intelligence missions. This exception is statutory under section 508 and is consistent with a similar exception in section 5142 of the Clinger-Cohen Act of 1996 (40 U.S.C. 1452). This exception does not apply to a system that is to be used for routine administrative and business applications (including payroll, finance, logistics, and personnel management applications). For example, software used for payroll, word processing software used for production of routine documents, ordinary telephones, copiers, fax machines, and web applications must still comply with the standards even if they are developed, procured, maintained, or used by an agency engaged in intelligence or military activities. On the other hand, a computer designed to provide early missile launch detection would not be subject to these standards.

Paragraph (b) provides an exception for electronic and information technology that is acquired by a contractor incidental to a Federal contract. That is, the products a contractor develops, procures, maintains, or uses which are not specified as part of a contract with a Federal agency are not required to comply with this part. For example, a consulting firm that enters into a contract with a Federal agency to produce a report is not required to procure accessible computers and word processing software to produce the report regardless of whether those products were used exclusively for the government contract or used on both government and non-government related activities. On the other hand, if such products were specified as contract deliverables (*i.e.*, they would become government property at the end of the contract) or if a Federal agency purchased the products to be used by the contractor as part of the project, those products would have to meet the standards. Similarly, if a firm is contracted to develop a web site for a Federal agency, the web site created must be fully compliant with this part, but the firm's own web site would not be covered. This exception is consistent with a similar exception in section 5002(3)(C) of the Clinger-Cohen Act of 1996 (40 U.S.C. 1452).

Paragraph (c) clarifies that, except as required to comply with these standards, this part does not require the installation of specific accessibility-related software or the attachment of an assistive technology device at a workstation of a Federal employee who is not an individual with a disability. Specific accessibility related software means software which has the sole function of increasing accessibility for persons with disabilities to other software programs (*e.g.*, screen magnification software). The purpose of section 508 and these standards is to build as much accessibility as is reasonably possible into general products developed, procured, maintained, or used by agencies. However, it is not expected that every computer will be equipped with a refreshable Braille display, or that every software program will have a built-in screen reader. Such assistive technology may be required as part of a reasonable accommodation for an employee with a disability or to provide program accessibility. To the extent that such technology is necessary, products covered by this part must not interfere with the operation of the assistive technology.

Paragraph (d) specifies that when agencies provide access to information or data to the public through electronic and information technology, agencies are not required to make equipment owned by the agency available for access and use by individuals with disabilities at a location other than that where the electronic and information technology is provided to the public, or to purchase equipment for access and use by individuals with disabilities at a location other than that where the electronic and information technology is provided to the public. For example, if an agency provides an information kiosk in a Post Office, a means to access the kiosk information for a person with a disability need not be provided in any location other than at the kiosk itself.

Paragraph (e) states that compliance with this part does not require a fundamental alteration in the nature of a product or its components. Fundamental alteration means a change in the fundamental characteristic of the product, not merely a cosmetic or aesthetic change. For example, an agency intends to procure pocket-sized pagers for their field agents. Adding a large display to a small pager may fundamentally alter the device by significantly changing its size to such an extent that it no longer meets the purpose for which it was intended, that is to fit in a shirt or jacket pocket.

Section 1194.4 Definitions

Accessible: The term accessible is defined in terms of compliance with the standards in this part, as is common with other accessibility standards. That is, if a product complies with the standards in this part, it is accessible; if it does not comply, it is not accessible.

Agency: Section 508 applies to any Federal department or agency, including the United States Postal Service (section 508(a)(1)(A)). The term ''agency'' as used in this rule includes all of these entities.[11]

Alternate Formats and Alternate Modes: These terms are given the same meaning here as in the Board's Telecommunications Act Accessibility Guidelines (36 CFR part 1193). Certain product information is required to be made available in alternate formats to be usable by individuals with various disabilities. Common forms of alternate formats are Braille, large print, ASCII text, and audio cassettes. Alternate modes are different means of providing information to users of products including product documentation and information about the status or operation of controls. For example, if product instructions are provided on a video cassette, captioning would be required.

Assistive Technology: Assistive technology means any item, piece of equipment, or system, whether acquired commercially, modified, or customized, that is commonly used to increase, maintain, or improve functional capabilities of individuals with disabilities. The definition is derived from a definition of assistive technology in the Assistive Technology Act of 1998 (29 U.S.C. 3001 *et seq.*).

Examples of assistive technology include, but are not limited to, (1) Screen readers which allow persons who cannot see a visual display to either hear screen content or read the content in Braille; (2) a specialized one-handed keyboard which allows an individual to operate a computer with only one hand; and (3) specialized audio amplifiers that allow persons with limited hearing to receive an enhanced audio signal.

[11] A government depository library is not considered a Federal agency.

Electronic and Information Technology: This is the statutory term for the products intended to be covered by the standards in this part. The statute explicitly required the Board to define this term, and required that the definition be consistent with the definition of ''information technology'' in the Clinger-Cohen Act of 1996 (40 U.S.C. 1401(3)). Therefore, this definition includes information technology as defined by that Act, as well as any equipment or interconnected system or subsystem of equipment, that is used in the creation, conversion, or duplication of data or information.

Electronic and information technology includes, but is not limited to, telecommunications products (such as telephones), information kiosks and transaction machines, web sites, multimedia, and office equipment such as copiers and fax machines. Consistent with the Federal Acquisition Regulations,[12] electronic and information technology does not include any equipment that contains imbedded information technology that is used as an integral part of the product, but the principal function of which is not the acquisition, storage, manipulation, management, movement, control, display, switching, interchange, transmission, or reception of data or information. For example, HVAC (heating, ventilation, and air conditioning) equipment such as thermostats or temperature control devices, and medical equipment where information technology is integral to its operation, are not information technology.

Information Technology: The definition of information technology is the same as the definition of information technology in section 5002(3) of the Clinger-Cohen Act. Information technology includes computers, ancillary equipment, software, firmware and similar procedures, services (including support services), and related resources.

Operable Controls: Operable controls are those components of a product that require manipulation or contact for operation of the device. Controls include on/off switches, buttons, dials and knobs, mice, keypads and other input devices, copier paper trays (both for inserting paper to be copied and retrieving finished copies), coin and card slots, card readers, and similar components. Operable controls do not include voice-operated controls.

[12] 48 CFR Chapter 1, part 2, section 2.101 Definitions Information Technology (c).

Product: Product is used as a shorthand for electronic and information technology throughout this part.

TTY: The term TTY is defined to be consistent with the Board's ADA Accessibility Guidelines (36 CFR part 1191) and Telecommunications Act Accessibility Guidelines.

Telecommunications: This term is defined consistent with the Board's Telecommunications Act Accessibility Guidelines and the definition of telecommunications in the Telecommunications Act (47 U.S.C. 153).

Undue Burden: The term ''undue burden'' is based on caselaw interpreting section 504 of the Rehabilitation Act (*Southeastern Community College* v. *Davis,* 442 U.S. 397 (1979)), and has been included in agency regulations issued under section 504 since the *Davis* case. See, *e.g.,* 28 CFR 39.150. The term ''undue burden'' is also used in Title III of the Americans with Disabilities Act. (ADA), 42 U.S.C. 12182(b)(2)(A)(iii). The legislative history of the ADA states that the term ''undue burden'' is derived from section 504 and the regulations thereunder, and is analogous to the term ''undue hardship'' in Title I of the ADA, which Congress defined as ''an action requiring significant difficulty or expense.'' 42 U.S.C. 12111(10)(A). See, H. Rept. 101–485, pt. 2, at 106. The Board has adopted this definition for ''undue burden.''

Title I of the ADA lists factors to be considered in determining whether a particular action would result in an undue hardship. 42 U.S.C. 12111(10)(B)(i)–(iv). Since Title I of the ADA addresses employment, not all of the factors are directly applicable to section 508 except for the financial resources of the covered facility or entity. In determining whether a particular action is an undue burden under section 508, the rule provides that the resources available to an agency or component for which the product is being developed, procured, maintained, or used is a factor to be considered. An agency's entire budget may not be available for purposes of complying with section 508. Many parts of agency budgets are authorized for specific purposes, and/or are provided as grants to non-Federal entities, and are thus not available for other purposes. Because available financial resources vary greatly from one agency to another, what constitutes an undue burden for a smaller agency may not be an undue burden for another, larger agency having more resources to commit to a particular procurement. Each procurement would necessarily be determined on a case-by-case basis.

The Board is considering including two additional factors in the final rule to determine whether an action is an undue burden.

Factor (2): An agency may consider the extent to which a product meeting the standards is compatible with the agency's or component's technology infrastructure, including security, and the difficulty of integrating the accessible product. For example, an agency wishes to contract with a digital cellular provider in order to provide cellular phone service to its employees. The agency's digital cellular network is not compatible with TTYs. Since these two products are incompatible with each other, it will result in an undue burden. The agency would not be prohibited from contracting with the digital provider. However, accommodations for TTY users could be made through an analog cellular phone, if needed. Should compatibility become feasible over time, this no longer would be viewed as an undue burden.

Factor (3): An agency may also consider the functionality needed from the product and the technical difficulty involved in making such a product accessible. For example, an agency needs to purchase a computer assisted design (CAD) software program. The function of the CAD program is to produce visual drawings. Technology is available to produce basic tactile images usable by an employee with a visual impairment, but to apply this technology to a CAD program would be extraordinarily difficult and have limited functionality, making it an undue burden.

Question 2: The Board seeks comment on whether factors (2) and (3) discussed above are appropriate factors for consideration in determining whether an action would be an undue burden under these standards.

Section 1194.5 Equivalent Facilitation

This section allows the use of designs or technologies as alternatives to those prescribed in this part provided that they result in substantially equivalent or greater access to and use of a product for people with disabilities. This provision is not a ''waiver'' or ''variance'' from the requirement to provide accessibility, but a recognition that future technologies may be developed, or existing technologies could be used in a particular way, that could provide the same functional access in ways not envisioned by these standards. In evaluating whether a technology results in ''substantially equivalent or greater access,'' it is the functional outcome,

not the form, which is important. For example, an information kiosk which is not accessible to a person who is blind might be made accessible by having a telephone handset that connects to a computer that responds to touch-tone commands and delivers the same information audibly.

Subpart B—Accessibility Standards

This proposed rule is based primarily on the recommendations of chapter five of the EITAAC report. The proposed rule rearranges and renames sections from the EITAAC report. Although the Board has reorganized the committee's recommendations, the Board believes that the concepts and most of the committee's recommended requirements have been preserved. The generic standards (EITAAC 5.2) are now labeled as functional performance criteria (1194.27). The Board made this change because it believes this group of specifications are yardsticks to use to measure performance as opposed to objective standards. Section 1194.27 contains the functional performance criteria against which all products will be judged. Sections 1194.23 and 1194.25 are the component specific and compatibility standards for accessibility. Where the Board has not included a recommendation from the committee's report it is noted.

Section 1194.21—General Requirements

The requirements under this section are general, because they do not apply to any specific product. For example, the requirements relating to displays apply to any display whether on a computer, a copier, or information kiosk and transaction machine.

Question 3: The Board seeks comment on the current organization of sections 1194.21 and 1194.23. Other ways of organizing functions may be more appropriate. The Board seeks comment on other approaches to organizing functions and requirements that might be easier to understand and implement.

Paragraph (a) provides that color coding shall not be used as the only means of identifying a visual element. This requirement applies to all products, whether web based or free standing office equipment. Relying on color as a singular method for identifying screen elements or controls poses serious problems, not only for people with limited or no vision, but also for those who are color blind. This requirement does not prohibit the use of color to help with component identification. It does however, require that some other method of identification, such as text labels, be combined with the use of color. While this provision is consistent with the recommendations of the advisory committee, the committee also recommended including a similar functional performance requirement. The functional performance criterion was not included in the proposed standards as it was duplicative of this requirement.

Paragraph (b) provides provisions for the physical characteristics of large office equipment including reach ranges and the general physical accessibility of controls and features. A large, free standing copier would be an example of a product addressed by this provision. This requirement is consistent with the recommendations of the advisory committee and is based on the Americans with Disabilities Act Accessibility Guidelines (ADAAG 4.2 Space Allowance and Reach Ranges). Two figures are provided to help explain the application of the provision.

Paragraph (c) provides that flashing visual displays and indicators shall not exceed a frequency of two Hertz. In 1988, the Board sponsored two research projects on visual fire alarms that found that individuals with photosensitive epilepsy can have a seizure triggered by displays which flicker or flash, particularly if the flash has a high intensity and is within certain frequency ranges. This provision limits the frequency of flashing visual displays and indicators to avoid triggering a seizure in an individual with photosensitive epilepsy. This requirement is consistent with the Telecommunications Act Accessibility Guidelines and the recommendations of the advisory committee.

Paragraph (d) provides that where a timed response is required, at least one mode which does not require users to respond within a timed interval shall be provided; or at least one mode which allows users to adjust the response times to at least 5 times the default setting shall be provided. Requiring a user to respond within a certain length of time is a method commonly used by interactive menu driven systems. If a person is calling through a telephone relay service, or has a dexterity related disability, entering information such as a social security number within a specified time may be difficult or impossible. This provision is consistent with the recommendations of the advisory committee.

Question 4: The Board seeks information on whether a system is commercially available that would allow an individual user to adjust the response time interval, and if so, whether 5 times the default setting is the correct standard. If available, what is the cost of such a system? The Board is also interested in comments addressing any security concerns raised by this requirement. For example, would the security of an information kiosk which allowed individuals to access personal information be compromised by allowing for the adjustment of the time-out feature?

Paragraph (e) provides that where biometric forms of user identification or activation are used, an alternative form of identification or activation, which does not require the user to possess particular biological characteristics, shall also be provided. Identification by biometric forms such as retina scan, fingerprint or palm print are growing in popularity. They are used for building access as well as electronic system access. However, such identification measures create access problems for some persons with disabilities. For example, if a system relies on fingerprint identification for access, a person with prosthetic hands would not be able to use the system. As a result, the Board is proposing to require that an alternative form of identification be provided which does not rely on particular biological characteristics. Under section 504 of the Rehabilitation Act, an employee who is unable to access a system due to the constraints of a biological characteristic may be entitled to a reasonable accommodation which would enable him or her to access the system through an alternative measure. This provision would require that an alternative measure be in place when the system is procured. This requirement is consistent with the recommendations of the advisory committee.

Question 5: The Board may consider requiring multiple forms of biological identification as an alternative to requiring non-biological identification in the final rule. Would this be a better solution? What would be the cost impact of requiring multiple forms of biological identification? Does requiring an alternative mode of identification which is not based on biological characteristics lessen security? The proposed standards require that an alternative form of identification be built-in whenever biometric identification is used. The Board is seeking comment on whether the final rule should permit the alternative method of identification to be added on at a later date rather than built-in at the time of procurement. If so, should compatibility be limited to workstations or to all systems that use biometric identification?

Paragraph (f) requires touchscreen and touch-operated controls to be

operable without requiring body contact or close body proximity. This requirement addresses the difficulty that individuals who have artificial hands or use headsticks or mouthsticks to operate products have with capacitive or heat-operated controls which require contact with a person's body. Touch-operated is not the same as a control which is operated by pushing a button or sliding a switch. Touch-operated controls are activated by merely touching them or placing a body part, usually a finger, in very close proximity. They often depend on the body acting as an electrical conductor which changes the capacitance of the switch. In addition, some touch operated controls are designed to detect the heat from a finger. In both of these instances, the control cannot be activated by a prosthetic limb, a mouthstick, or even a gloved hand.

Alternative access modes which do not require body contact or close body proximity may include keypad input and voice input and different types of touchscreens or touch-operated controls which do not require bodily contact or proximity to operate. This provision is consistent with the recommendations of the advisory committee.

Section 1194.23 Component Specific Requirements

The requirements in the following paragraphs address specific components of products. Paragraph (a) applies to mechanically operated controls, keyboards or keypads. These provisions address controls which require a user to physically manipulate or press a switch, button, or knob, to operate a product.

Paragraph (a)(1) provides that controls and keys shall be tactilely discernible without activating the controls or keys. Tactilely discernible means that individual keys can be located and distinguished from adjacent keys. To comply with this requirement, controls that must be touched to activate, must be distinguishable from each other. This can be accomplished by using various shapes, spacing, or tactile markings. Because touch is necessary to discern tactile features, this provision provides that the control should not be activated by mere touching. For example, the standard desktop computer keyboard would meet this requirement because the tactile mark on the ''j'' and ''f'' keys permits a user to locate all other keys tactilely. The geographic spacing of the function, ''numpad'' and cursor keys make them easy to locate by touch. In addition, most keyboards require some pressure before they transmit a keystroke. Conversely, ''capacitance'' keyboards that react as soon as they are touched and have no raised marks or actual keys would not meet this requirement. A ''membrane'' keypad with keys that must be pressed can be made tactilely discernible by separating keys with raised ridges so that individual keys can be distinguished by touch. This provision is consistent with the recommendations of the advisory committee.

Paragraph (a)(2) provides that the status of toggle controls such as the ''caps lock'' or ''scroll lock'' keys be determined by both visual means and by touch or sound. For example, adding audio patterns such as ascending and descending pitch tones that indicate when a control is turned on or off would alleviate the problem of a person who is blind inadvertently pressing the locking or toggle controls. Also, buttons which remain depressed when activated or switches with distinct positions would meet this provision. This provision is consistent with the recommendations of the advisory committee.

Paragraph (a)(3) provides that controls shall be accessible to persons with limited dexterity. Individuals with tremor, cerebral palsy, paralysis, arthritis, or artificial hands may have difficulty operating systems which require fine motor control, assume a steady hand, or require two hands or fingers to be used simultaneously for operation. Individuals with high spinal cord injuries, arthritis, and other conditions may have difficulty operating controls which require significant strength. The provision limits the force required to five pounds and is based on section 4.27.4 of the ADA Accessibility Guidelines and is consistent with the Telecommunications Act Accessibility Guidelines and the recommendations of the advisory committee.

Paragraph (a)(4) provides that access to all program functions shall be available through keyboard or keypad commands. Keyboard or keypad commands provide a viable alternative for those who cannot use a pointing device or touchscreen. This provision does not require that every product have a keyboard. It requires that where a keyboard or keypad is provided, the program functions shall be available through keyboard or keypad commands. This provision is consistent with the recommendations of the advisory committee.

Paragraph (a)(5) establishes requirements for key repeat rate where an adjustable keyboard repeat rate is supported. It requires that the keyboard delay before repeat shall be adjustable to at least two seconds per character. This provision is consistent with the recommendations of the advisory committee.

The advisory committee also recommended three provisions that the Board has not included in this proposed rule. The committee recommended that assigned keyboard access (e.g., Ctrl+P for Print, Escape for cancel) be provided for commonly used functions or commands and that the keyboard map not change except under user control, so that a user memorizing key locations shall be able to rely on those locations. The Board has not included these provisions since they are user convenience issues not accessibility issues. The committee also recommended that all keyboard access functionality be documented with a product or follow documented operating system conventions. This provision is not included since documentation is already addressed by section 1194.31.

Paragraph (b) applies to non-embedded software applications and operating systems. All electronic and information technology products operate by following programming instructions referred to as software. Software can be divided into two broad categories: software that is embedded in a chip mounted in a product and software that is loaded onto a storage device such as a hard disk and can be erased, replaced or updated. The provisions in this section address requirements for accessible ''installable, non-embedded'' software.

Paragraph (b)(1) requires the use of keystrokes for navigation among interface elements. For persons with vision impairments who cannot use a pointing device such as a mouse, having access to program controls through keyboard navigation is essential. An example of this feature would be the ability to tab through the choices in a dialog box rather than requiring that a user move a pointer to a particular selection and click on it. This provision is consistent with the recommendations of the advisory committee.

Paragraph (b)(2) prohibits applications from disabling access features of applications or the operating system. There are commercially available software applications and operating systems that have accessibility features built-in that can be turned on or off by a user. These include features that can reverse the color scheme, show an image when an error tone is generated, or provide for ''sticky keys'' that allow a user to hit key combinations (such as control-C) sequentially rather than simultaneously. This provision prohibits other software programs from disabling these features when selected. This requirement is

consistent with the recommendations of the advisory committee.

Paragraph (b)(3) requires that a well-defined on-screen indication of the current focus be provided that moves among interactive interface elements as the input focus changes. The focus is the point on a screen where an action will occur when a keystroke or mouse click is activated. For example, when an individual displays a file directory on the screen, the focus point shows what file will be activated when the enter key is pressed. The focus must be programmatically exposed so that assistive technology can track the focus and focus changes and be easily seen by the user. The focus point must be identified in the program language. Making the identification of the focus point in the software programmatically available allows programmers of assistive technology software such as screen readers, to let the user know where the current focus is placed. This provision is consistent with the recommendations of the advisory committee.

Paragraph (b)(4) requires that programs provide sufficient information about a user interface element, including the identity, operation and state of the element, to assistive technology software. User interface elements can include, but are not limited to, buttons, checkboxes, menu bars, or tool bars. For assistive technology to operate efficiently, it must have access to the information about a user interface from the program to be able to inform the user of the existence, location, and status of all interface elements. This provision is consistent with the recommendations of the advisory committee.

Paragraph (b)(5) provides requirements for accessing images that represent an action. For example, a push button, checkbox or other action point is often represented by a graphic. Assistive technology however, cannot describe pictures or graphics. This provision requires that programs provide text such as a ''tooltip'' for the assistive technology to interpret the pictures so that a user of assistive technology can identify what action will occur when an element is activated by a keystroke or mouse click. This provision is consistent with the recommendations of the advisory committee.

Paragraph (b)(6) provides that the use of an image will be consistent throughout an application. Most screen reading programs allow users to assign text names to bitmap images. If the bitmap image should change meaning during the running of an application, the assigned identifier is no longer valid. This provision prohibits the changing of the meaning of a bitmap image during an application and is consistent with the recommendations of the advisory committee.

Paragraph (b)(7) provides that software must follow standard programming techniques applicable for the specific operating system when software programs supply text to assistive technology programs. If programs are written using nonstandard code, other programs such as software for assistive technology may not be able to receive information from the application. At a minimum, the types of text information that must be available include text content, text input caret location, and text attributes. This provision is consistent with the recommendations of the advisory committee.

Paragraph (b)(8) requires that a minimum of eight foreground and eight background color selections capable of producing a variety of contrast levels be provided. This provision requires more than just providing color choices. The available choices must also allow for different levels of contrast. Many people experience a high degree of sensitivity to bright displays. Someone with this condition cannot focus on a bright screen for long because they will soon be unable to distinguish individual letters. An overly bright background causes a visual ''white-out''. To alleviate this problem, the user must be able to select a softer background and appropriate foreground colors.

In addition to requiring different levels of colors and contrasts, the advisory committee recommended providing a ''wide variety'' of font size and style settings. The proposed provision does not require variations of font sizes and styles because those who would benefit from increased font size will also need an increase in the size of all screen elements. This can best be accomplished by adding screen enlargement software to the system.

Question 6: The Board seeks comment on whether eight foreground and eight background colors is sufficient to give the user ample selections. If a larger number of choices were required, is software commercially available from more than one manufacturer?

Paragraph (b)(9) prohibits applications from overriding user selected contrast and color selections. This provision addresses the problem of applications refusing to respect system-wide settings and is consistent with the recommendations of the advisory committee. Often persons with disabilities prefer to select color, contrast, keyboard repeat rate, and keyboard sensitivity settings in an operating system. When an application disables these settings, accessibility is reduced. This provision allows the user to select personalized settings which cannot be disabled by software programs.

Paragraph (b)(10) requires that people with disabilities have access to electronic forms. Electronic forms are a popular method used by many agencies to gather information or permit a person to apply for services, benefits, or employment. The 1998 Government Paperwork Elimination Act requires that Federal agencies make electronic versions of their forms available online and allows individuals and business to use electronic signatures to file these forms electronically. This provision requires that when an agency uses a form that cannot be read and manipulated by assistive technology, an alternative form must also be provided that is accessible. An example of a form which is not accessible is one which is graphical in nature and cannot be translated into meaningful text by assistive technology. This provision is consistent with the recommendations of the advisory committee.

Paragraph (b)(11) establishes requirements for handling animated text. The use of animation on a screen can pose serious access problems for users of screen readers or other assistive technology. When important elements such as push buttons or relevant text are animated, the user of assistive technology cannot access the application. This provision requires that in addition to the animation, an application provide the elements in a static form. This provision is consistent with the recommendations of the advisory committee.

The advisory committee also recommended that system startup and restart be accessible, however, the Board has not included that provision in the proposed rule since no measurable standards were recommended.

Paragraph (c) applies to web-based information and applications. These standards do not apply to external web sites, including search engines, which are not developed or procured by a Federal agency. For example, an employee of an agency may use a search engine which is based on a commercial web site. That search engine does not have to comply with these standards.

By statute, when a Federal agency develops, procures, maintains or uses electronic and information technology, including web-based information and applications, they must comply with these standards unless to do so would

be an undue burden (section 508(a)(1)(A)). The enforcement provisions of section 508, however, are limited to those web-based information and applications that are procured on or after August 7, 2000. (See section 508(f)(1)(B)). The enforcement provisions are silent with respect to products which are not procured, but are developed, used or maintained by a Federal agency (*e.g.,* an agency develops a web page in house). However, even though the enforcement mechanisms provided in section 508 do not authorize complaints or lawsuits for inaccessible products which are developed, used or maintained by an agency, the Board expects that these products, including web pages, will be accessible. (See section 508(a)(1)(A) which addresses the development, procurement, maintenance, or use of electronic and information technology by the Federal government.) The Board notes that section 504 of the Rehabilitation Act imposes a duty on the Federal government to make programs conducted by the Federal government (*e.g.,* an agency web site) accessible and that both sections 501 and 504 of that Act requires that Federal agencies address the needs of employees with disabilities. (29 U.S.C. 794 (section 504); 29 U.S.C. 791 (section 501)). It is possible that in determining compliance with these statutory obligations, the standards issued by the Board under section 508 of the Rehabilitation Act will be used as a yardstick to measure whether a program is accessible. Furthermore, under section 508 of the Rehabilitation Act, the Department of Justice has an obligation to prepare biennial reports assessing compliance by Federal agencies with these standards (section 508(d)(2)). That report would address products developed, procured, maintained or used by the Federal government, as well as actions regarding individual complaints.

Example 1: On January 1, 2001, a Federal agency enters into a procurement contract with an outside entity for the development of an agency web site. That web site would have to meet these standards, unless to do so would be an undue burden. Because it is a procurement on or after August 7, 2000, the agency would be subject to a complaint or civil action if the web site was not accessible. Suppose however, the agency develops its own web site. That web site would have to be accessible under section 508(a)(1)(A), unless it was an undue burden, but because it was not a procurement, the enforcement provisions under section 508(f) of the Rehabilitation Act would not apply. While there may not be a remedy under section 508, there would be recourse under section 504 of the Rehabilitation Act in that the agency was conducting a program that was not accessible.

Example 2: An agency has an existing web site and enters into a procurement contract with an outside entity to develop new pages to be added to its web site to address a new program. The content of the new pages would have to meet these standards unless to do so would be an undue burden. If the procurement was on or after August 7, 2000, the accessibility of the new pages could be the subject of a complaint or civil action. With respect to the preexisting web site, it would be subject to the agency's obligations under section 504 of the Rehabilitation Act which may require that the agency develop a plan to update the web site and make it accessible over a period of time.

The advisory committee recommended that the Board's standards reference the World Wide Web Consortium's (W3C) Web Accessibility Initiative's (WAI) [13] Web Content Accessibility Guidelines, User Agent Accessibility Guidelines, and Authoring Tool Accessibility Guidelines, including requirements from priority levels one and two for each document.

Rather than referencing the WAI guidelines, the proposed standards include provisions which are based generally on priority level one checkpoints of the Web Content Accessibility Guidelines 1.0, as well as other agency documents on web accessibility and additional recommendations of the advisory committee. The Board's rephrasing of language from the Web Content Accessibility Guidelines 1.0 in paragraph (c) of the proposed rule has not been reviewed by the W3C, since proposed rules are not made public until published in the **Federal Register**.

The advisory committee also included specific recommendations for browsers and web authoring tools. Because web browsers and web authoring tools, (as well as web pages) are software in nature, they must also comply with the requirements of section 1194.23(b).

Paragraph (c)(1) requires that a text equivalent be provided for every non-text element. For example, a link or graphic on a web page that indicates an action or a URL cannot be interpreted by assistive technology. This provision would require that an alternative text label be assigned to that link or graphic. This provision is consistent with the recommendations of the advisory committee.

Paragraph (c)(2) requires alternatives for color based prompting. The creative use of color can enhance the look of web pages. However, a person who has either low vision or is color blind would have difficulty activating color based prompts. Web pages therefore, are required to indicate with text that which is evident by using color. For example, a statement such as ''press the green button to begin,'' should read ''press the green button labeled start to begin,'' and the word ''start'' should be associated with the green button. This provision is consistent with the recommendations of the advisory committee.

Paragraph (c)(3) provides that the user be alerted to a change in the natural language of a web page. For example, this requirement can be met by adding a line of text to a web page which changes from English to French by adding text which reads ''the following paragraph is presented in French.'' Most screen readers used by blind and visually impaired persons only have rules for pronouncing one language. If the web site did not alert the user to a language change, the user would be at a loss as to why the page had become unintelligible. This provision is consistent with the recommendations of the advisory committee.

Paragraph (c)(4) provides that documents must be organized so they are readable without requiring style sheets. Style sheets are a relatively new technology that allows web site designers to easily control formatting (such as font size and color and text alignment) throughout their web pages. This provision does not prohibit the use of style sheets (which can often be used to enhance accessibility) provided that web pages using style sheets can be viewed by browsers not supporting style sheets and by browsers that have disabled support for style sheets. In addition, certain newer browsers allow users to define their own style sheets to improve the accessibility of web pages. This provision prohibits the use of style sheets that interfere with user defined style sheets. This provision is consistent with the recommendations of the advisory committee.

Paragraph (c)(5) requires that when alternative access to web page content, such as captioning of audio programs or multimedia, is provided, that alternative

[13] The Web Accessibility Initiative (WAI), in coordination with organizations around the world, is pursuing accessibility of the web through five primary areas of work: technology, guidelines, tools, education and outreach, and research and development. Additional resources are available at http://www.w3.org/WAI, including the Web Content Accessibility Guidelines 1.0, available at http://www.w3.org/TR/WCAG10.

must be updated on the screen every time the content changes. This provision is consistent with the recommendations of the advisory committee.

Paragraph (c)(6) provides that redundant text links must be provided for each active region of a server-side image map. When a web page uses server-side maps as navigation aids, the individual browser cannot communicate the URL that will be followed when a region of the map is activated. Therefore, the redundant text link will be necessary to provide access to the page for anyone not able to see or load the map. This provision is consistent with the recommendations of the advisory committee.

Paragraph (c)(7) provides that client-side image maps must be used whenever possible in place of server-side image maps. When a web page downloads a client-side image map to a browser, it also sends all the information about what action will happen when a region of the map is pressed. For this reason, client-side image maps, even though graphical in nature, will show the links related to the map in a text format. This provision is consistent with the recommendations of the advisory committee.

Paragraphs (c)(8) and (9) permit the use of tables, but require that the tables be coded according to proper HTML rules. Many assistive technology applications can interpret the HTML coding of tables. When tables are coded inaccurately or table codes are used for non tabular material, the assistive technology cannot accurately read the content.

Paragraph (c)(10) establishes requirements for the use of frames. Frames can be an asset to users of screen readers if the labels on the frames are explicit. Such labels as top, bottom, or left, provide few clues as to what is contained in the frame. Labels such as ''navigation bar'' or ''main content'' are more meaningful and facilitate frame identification and navigation. This provision is consistent with the recommendations of the advisory committee.

Paragraph (c)(11) provides that scripts, applets, or other plug-ins must not be essential to reading or navigating a web page. When the content or navigation of a web page relies on scripts or requires that a user have a specific plug-in installed, the result can be an inaccessible page. If the page cannot be created with text attributes for navigation and content that do not require a plug-in, then an alternate text page may be the only solution. The Board recommends that access features be incorporated into all web pages without resorting to alternative text pages. This provision is consistent with the recommendations of the advisory committee.

Paragraph (c)(12) provides that when features such as captioning for audio output or descriptive audio for graphics is provided, the captioning or description must be presented in a synchronous manner. This provision is consistent with the recommendations of the advisory committee.

Paragraph (c)(13) provides that an appropriate method must be used to facilitate the easy tracking of page content that provides users of assistive technology the option to skip repetitive navigation links. It is common for web authors to place navigation links at the top, bottom, or side of every new page. This technique can render use of a web site very difficult for persons using a screen reader as screen readers move through pages reading from top to bottom. The use of repetitive navigation links forces persons with visual impairments to re-read these links when moving to every new page. This provision allows the user to more efficiently read the contents of a page. This provision is consistent with the recommendations of the advisory committee.

The advisory committee also recommended that if extensive ASCII art is used, a link should be provided to allow a user to jump to the end of the ASCII art. The Board has not included this provision since it is a user convenience issue not an accessibility issue.

Paragraph (d) applies to telecommunications functions. These provisions address products which involve the transmission of information without changing the form or content of the information as sent and received. ''Telecommunications'' is further defined in section 1194.4, Definitions.

Paragraph (d)(1) requires that products shall provide a standard non-acoustic connection point for TTYs when they have a function that allows voice communication and do not provide a TTY functionality. It shall also be possible for the user to easily turn any microphone on the product on and off to enable the user who can talk to intermix speech with TTY use. Individuals who use TTYs to communicate must have a non-acoustic way to connect TTYs to telephones in order to obtain clear TTY connections, such as through a direct RJ–11 connector, a 2.5 mm audio jack, or automatic switching. When a TTY is connected directly into the network, it must be possible to turn off the acoustic pickup (microphone) to avoid having background noise in a noisy environment mixed with the TTY signal. Since some TTY users make use of speech for outgoing communications, the microphone on/off switch must be easy to flip back and forth or a push-to-talk mode should be available. This provision is consistent with the Board's Telecommunications Act Accessibility Guidelines and the recommendations of the advisory committee.

Paragraph (d)(2) requires products providing voice communication functionality to be able to support use of all cross-manufacturer non-proprietary standard signals used by TTYs. Some products compress the audio signal in such a manner that standard signals used by TTYs are distorted or attenuated, preventing successful TTY communication. Use of such technology is not prohibited as long as the compression can be turned off to allow undistorted TTY communication. This provision is consistent with the Telecommunications Act Accessibility Guidelines and the recommendations of the advisory committee.

Paragraph (d)(3) provides that voice mail, auto-attendant, and interactive voice response telecommunications systems shall be usable by TTY users with their TTYs. Voice mail systems are available which allow TTY users to retrieve and leave TTY messages. This provision does not require that phone systems have voice to text conversion capabilities so that a person who is deaf can retrieve a voice mail message directly with their TTY without relying on a relay service or an interpreter, but it does require that TTY users can retrieve and leave TTY messages. This provision is consistent with the recommendations of the advisory committee.

Paragraph (d)(4) prohibits telecommunications services, such as interactive systems, from imposing time limits for responses. For example, a person accessing a Federal agency's automated menu from a TTY may need additional time to read the options and respond. This provision is consistent with the Telecommunications Act Accessibility Guidelines and the recommendations of the advisory committee.

Paragraph (d)(5) provides that functions such as caller identification must be accessible for users of TTYs, telecommunications relay services, and for users who cannot see displays. This provision is consistent with the recommendations of the advisory committee.

Paragraph (d)(6) requires products to be equipped with volume control that provides an adjustable amplification up to a minimum of 20 dB of gain. If a volume adjustment is provided that allows a user to set the level anywhere from 0 to the upper requirement of 20 dB, there is no need to specify a lower limit. If a stepped volume control is provided, one of the intermediate levels must provide 12 dB of gain. The gain applies to the voice output not Baudot, ASCII, or other machine codes. The proposed level of amplification is different from that required under the Hearing Aid Compatibility Act and the Federal Communications Commission's (FCC) regulations (47 CFR 68.317 (a)). The FCC requires volume control that provides, through the receiver in the handset or headset of the telephone, 12 dB of gain minimum and up to 18 dB of gain maximum, when measured in terms of Receive Objective Loudness Rating.

In accordance with the National Technology Transfer and Advancement Act, this provision is consistent with the 1998 ANSI A117.1 document, ''Accessible and Usable Buildings and Facilities.'' ANSI is the voluntary standard-setting body which issues accessibility standards used by the nation's model building codes. The Board has issued a separate NPRM to harmonize the existing ADAAG provision with the ANSI standard. This provision is consistent with the Telecommunications Act Accessibility Guidelines. Tests conducted by two independent laboratories found high gain phones without special circuitry currently on the market which had 90 dB and 105 dB at maximum volume setting. This is a 20 dB gain over the standard 85 dB ambient noise level. (See Harry Teder Ph.D., Consulting in Hearing Technology; Harry Levitt, Ph.D., Director, Rehabilitation Engineering and Research Center on Hearing Enhancement and Assistive Devices, Lexington Center).

Paragraph (d)(7) requires that an automatic reset be installed on any telephone that allows the user to adjust the volume higher then the normal level. This is a safety feature to protect people from suffering damage to their hearing if they accidentally answer a telephone with the volume turned too high. This provision is consistent with the recommendations of the advisory committee.

Paragraph (d)(8) requires products that provide auditory output by an audio transducer normally held up to the ear, to provide a means for effective wireless coupling to hearing aids. Generally, this means the earpiece generates sufficient magnetic field strength to induce an appropriate field in a hearing aid T-coil. The output in this case is the direct voice output of the transmission source, not the ''machine language'' such as tonal codes transmitted by TTYs. For example, a telephone must generate a magnetic output so that the hearing aid equipped with a T-coil can accurately receive the message. This provision is consistent with the Telecommunications Act Accessibility Guidelines and the recommendations of the advisory committee.

Paragraph (d)(9) requires that interference to hearing technologies shall be reduced to the lowest possible level that allows a user of hearing technologies to utilize a telecommunications product. Individuals who are hard of hearing use hearing aids and other assistive listening devices, but they cannot be used if products introduce noise into the listening aids because of electromagnetic interference. The American National Standards Institutes (ANSI) has established a task group under its subcommittee on medical devices to work toward the development of methods of measurement and defining the limits for hearing aid compatibility and accessibility to wireless telecommunications. The ANSI C63.19 task group is continuing to develop its standard, C63.19–199X, American National Standard for Methods of Measurement for Hearing Aid Compatibility with Wireless Communications Devices. When the standard is completed, the Board may reference it. This provision is consistent with the Telecommunications Act Accessibility Guidelines and the recommendations of the advisory committee.

Question 7: The Board seeks comment on how to better quantify the ''lowest possible level'' of interference.

Paragraph (e) applies to video or multimedia products. Multimedia products involve more than one media and include, but are not limited to, video programs, narrated slide production, and computer generated presentations.

Paragraph (e)(1) requires any system with a screen larger than 13 inches to be equipped with caption decoder circuitry which appropriately receives, decodes, and displays closed captions from broadcast, cable, videotape, and DVD signals. The FCC has standards for televisions 13 inches or larger, but video capabilities are now becoming popular in computers as well. This provision addresses these new video technologies. This provision is consistent with the recommendations of the advisory committee.

Paragraph (e)(2) requires that television tuners, including tuner cards for use in computers, be equipped with the circuitry needed to carry the secondary audio channel. The secondary audio channel is commonly used for audio description. This provision is consistent with the recommendations of the advisory committee.

Paragraphs (e)(3) and (4) require that when an agency develops or procures multimedia productions that are intended to be shown repeatedly to audiences that may include persons who would need the captioning or audio description features, those productions must contain captioning or audio description. Audio description involves the insertion into a multimedia program, such as a video tape, of narrated descriptions of settings and actions that are not otherwise reflected in the dialogue, such as the movement of a person in the scene. Audio description is typically provided through the use of the Secondary Audio Programming (SAP) channel so that it is audible only when that channel is activated through a TV set, computers with a tuner card, or a VCR with SAP capability.

Under these provisions, the requirements to have a videotape or multimedia production captioned or audio described would depend on its intended use. For example, an agency produces, or contracts to have produced, a videotape on government ethics. This videotape is made available for many agencies to purchase and use in training sessions. Since the tape is intended to be shown multiple times and to varied audiences, the composition of which may include people with hearing or vision impairments, it must be captioned and audio described, unless it is an undue burden to do so. On the other hand, a small agency or single office purchases a videotape on some aspect of acoustics which it intends to show to its staff to help understand a technical issue. Since the videotape is not intended to be shown on a repeated basis, and the agency knows that none of its staff have a hearing or vision impairment, the videotape would not need to be captioned or audio described. If however, the video was to be shown to an employee who is deaf, the agency would be required to accommodate that individual by providing an interpreter even though the videotape would not be required to be captioned. Such accommodations would be required

under section 501 or 504 of the Rehabilitation Act, not section 508.

Question 8: The Board seeks information on the technical feasibility of making various computer generated presentations that comply with these provisions. Based on the proposed rule, computer based narrated slide presentations must be both captioned and audio described if they are shown multiple times and to varied audiences, the composition of which may include people with hearing or vision impairments.

Paragraph (e)(5) provides that viewers must be able to turn captioning or video description features on or off. A person who can hear the audio may find the captioning of conversation intrusive, and people who can see the screen and can hear may find the audio description distracting. For this reason, it is important that an individual have the ability to select or deselect a particular feature.

The advisory committee also recommended that digital television receivers meet the EIA–708–A standard for the transmission of captioning on a digital television signal. The Board has not included this provision since in July 1999, the Federal Communications Commission proposed to amend its rules to include requirements for the display of closed captioned text on digital television receivers. The FCC took this action to ensure that closed captioning services are available in the transition from analog to digital broadcasting. The Board may address this issue in future changes to the standards.

Paragraph (f) applies to information kiosks and information transaction machines. This category of products includes, but is not limited to, automatic teller machines and information kiosks. On November 16, 1999, the Board published a Notice of Proposed Rulemaking to revise and update its accessibility guidelines for buildings and facilities covered by the Americans with Disabilities Act of 1990 (ADA) and the Architectural Barriers Act of 1968 (ABA). 64 FR 62248 (November 16, 1999). Included in that proposed rule are extensive revisions to the requirements for access to automatic teller machines (ATMs) and fare machines. (See sections 707.1;–707.8.3). The proposed revisions to the ADA and ABA guidelines provide more specific guidance on access to such equipment for people with vision impairments. In that proposed rule, the Board requested comment on whether the final rule should cover all types of interactive transaction machines, such as point-of-sale machines and information kiosks, among others, rather than be limited to automatic teller machines and fare vending machines. If the Board decides to broaden the requirements to other types of information transaction machines in the final rule for the ADA and ABA guidelines, the final rule for access to electronic and information technology may not include requirements for information transaction machines since the ADA and ABA rulemaking would apply to the Federal government as well as the private sector.

Paragraph (f)(1) provides that access features must be built into the system rather than requiring users to attach an assistive device to the product. Personal headsets are not considered an assistive device and may be required to use the product. This provision is consistent with the recommendations of the advisory committee.

Paragraph (f)(2) provides that information kiosks and information transaction machines that deliver audio output, including speech, shall provide a mechanism for private listening and user interruptability. A mechanism for private listening means providing either a telephone type handset or a standard jack for headphones. These mechanisms allow users to hear information in private. Allowing the user to interrupt long spoken phrases increases the product's usability and saves time for the user and others who may be waiting to access the product. This provision is consistent with the recommendations of the advisory committee.

Paragraph (f)(3) provides that information kiosks and information transaction machines that deliver voice output, shall provide incremental volume control with output amplification up to a level of at least 65 dB. Where the ambient noise level of the environment is above 45 dB, a volume gain of at least 20 dB above the ambient level shall be user selectable. According to the Occupational Safety and Health Administration, and the American Speech, Language, and Hearing Association, 65 dB is the volume level for normal speech. This provision requires that audio output from a kiosk type product shall have a minimum level of 65 dB. For people with reduced hearing, voice levels must be 20 dB above the surround sound level to be understandable. This means that as long as the noise level in the surrounding environment is below 45 dB, the 65 dB output level would be sufficient. If the product is in an environment with a high noise level, the user must be able to raise the volume to a setting of 20 dB higher than the ambient level. This provision is consistent with the recommendations of the advisory committee.

The advisory committee also recommended standards for remote wireless access to these products. The Board has not included those recommendations since compliant technology is still in development.

Other Issues

The advisory committee recommended other provisions that the Board did not include in this rule. For example, the committee considered methods for making a personal digital assistant (PDA), such as a ''palmtop,'' accessible for a segment of people with disabilities. The Board has not included such a provision because the technology to make PDAs accessible does not exist at this time.

The committee also recommended that the connection of cables, mounting, and attaching external elements of products (*e.g.*, connecting an external monitor or accessory), require less than 5 pounds of force and that cables be differentiable by touch or keyed for corresponding connections. These provisions are not included since members of the public seeking information from an agency would not be expected to attach or disconnect cables and employees are also covered by sections 501 and 504 of the Rehabilitation Act which require reasonable accommodation to the needs of an employee. Also, connecting and disconnecting cables is not generally an employee task. In the few instances where it is, such as attaching a refreshable Braille display to a laptop, the connections are usually made with standard parallel and serial connectors which are polarized or shaped to prevent incorrect connections. Section 1194.25(b) restricts the use of proprietary connectors.

Section 1194.25 Requirements for Compatibility With Assistive Technology

Compliant products must be accessible either inherently or by being compatible with add-on assistive technology. The provisions in this section address the requirements for compatibility.

Paragraph (a) provides that all products that act as a transport or conduit for information or communication shall pass all codes, translation protocols, formats, or any other information necessary to provide information or communication in an accessible format. In particular, signal compression technologies shall not remove information needed for access or shall restore it upon decompression.

Some transmissions include codes or tags embedded in ''unused'' portions of the signal to provide accessibility. For example, closed captioning information is usually included in portions of a video signal not seen by users without decoders. This section prohibits products from stripping out such information or requires the information to be restored at the end point. This provision is consistent with the Telecommunications Act Accessibility Guidelines and the recommendations of the advisory committee.

Paragraph (b) requires that, where provided, one of each type of expansion slot, port and connector must comply with publicly available industry standards. This provision applies to hardware products that may require the attachment of assistive technology devices to make them accessible. Examples of publicly available industry standards may include RS–232, Centronics, SCSI interfaces, PCMCIA, or USB.

Paragraph (c) prohibits operating system software from interfering with assistive technology. If an operating system preempts the use of keyboard assignments or the use of specific ports, it can be difficult or impossible to operate the system with assistive technology. This provision requires operating systems to permit the background operation of assistive technology products. This provision is consistent with the recommendations of the advisory committee.

Paragraph (d) requires products with auditory output to provide the auditory signal through an industry standard connector at a standard signal level. Individuals using personal headphones, amplifiers, audio couplers, and other audio processing devices need a place to tap into the audio generated by the product in a standard fashion. This provision is consistent with the Telecommunications Act Accessibility Guidelines and the recommendations of the advisory committee.

Section 1194.27 Functional Performance Criteria

This section requires that a product's operation and information retrieval functions be operable through at least one mode which meets each of the following paragraphs.

Paragraph (a) provides that at least one mode of operation and information retrieval that does not require user vision shall be provided, or support for assistive technology used by people who are blind or visually impaired shall be provided. It is not expected that every software program will be self-voicing or have its own built-in screen reader. Providing keyboard access as specified in 1194.23(a) and software that complies with section 1194.23(b) would satisfy this requirement. This provision is consistent with the Telecommunications Act Accessibility Guidelines and the recommendations of the advisory committee.

Paragraph (b) provides that at least one mode of operation and information retrieval that does not require visual acuity greater than 20/70 (when corrected with glasses) must be provided in audio and enlarged print output that works together or independently. In the alternative, support for assistive technology used by people who are visually impaired must be provided. Although visual acuity of 20/200 is considered ''legally blind,'' there are actually millions of Americans with vision below the 20/200 threshold who can still see enough to operate and get output from technology, often with just a little additional boost in contrast or font size. This paragraph requires either the provision of screen enlargement and voice output or, that the product support assistive technology. This provision is consistent with the Telecommunications Act Accessibility Guidelines and the recommendations of the advisory committee.

Paragraph (c) provides that at least one mode of operation and information retrieval that does not require user hearing must be provided or, in the alternative, support for assistive technology used by people who are deaf or hard of hearing shall be provided. This requirement is met when a product provides visual redundancy for any audible cues or audio output. If this redundancy cannot be built into a product then the product shall support the use of assistive technology that complies with section 1194.25, Requirements for Compatibility with Assistive Technology. This provision is consistent with the Telecommunications Act Accessibility Guidelines and the recommendations of the advisory committee.

Paragraph (d) requires that audio information important for the use of a product, must be provided in an enhanced auditory fashion by allowing for an increase in volume and/or altering the tonal quality or increasing the signal to noise ratio. For example, increasing the output would assist persons with limited hearing to receive information. Audio information that is important for the use of a product includes, but is not limited to, error tones, confirmation beeps and tones, and verbal instructions. This provision is consistent with the Telecommunications Act Accessibility Guidelines and the recommendations of the advisory committee.

Paragraph (e) provides that at least one mode of operation and information retrieval which does not require user speech must be provided, or support for assistive technology shall be provided. Most products do not require speech input, however, if speech input is required to operate a product, this paragraph requires that at least one alternative input mode also be provided. For example, an interactive telephone menu that requires the user to say or press ''one'' would meet this requirement. This provision is consistent with the Telecommunications Act Accessibility Guidelines and the recommendations of the advisory committee.

Paragraph (f) provides that at least one mode of operation and information retrieval that does not require fine motor control or simultaneous actions and which is operable with limited reach and strength must be provided. Products that meet the requirements in sections 1194.21(b) and 1194.23(a)(3) would comply with this requirement. This provision is consistent with the Telecommunications Act Accessibility Guidelines and the recommendations of the advisory committee.

The advisory committee also recommended provisions that address limited cognitive or memory abilities and limited language and learning disabilities. Although it is important to be cognizant of issues for all people with disabilities, we believe that it is difficult for a manufacturer or procurement official to know if the criteria the committee recommended were met. Also, many of the features required to accommodate other disabilities, can be very useful to people with learning and language related disabilities. For example, features such as voice output and highlighting a focus tracking helps those with reading difficulties.

Subpart C—Information, Documentation, and Support

Section 1194.31 Information, Documentation, and Support

In order for a product or system to be fully accessible, the information about the product and product support services must also be accessible. These issues are addressed in this section.

Paragraph (a) provides that when an agency provides end-user documentation to users of technology, the agency must ensure that the documentation is available upon request in alternate formats. Alternate formats

are defined in section 1194.4, Definitions. Except as provided in paragraph (b) below, this provision does not require alternate formats of documentation that is not provided by the agency to other users of technology. This provision is consistent with the recommendations of the advisory committee.

Paragraph (b) requires that agencies supply end-users with information about accessibility or compatibility features that are built into a product, upon request. This provision is consistent with the Telecommunications Act Accessibility Guidelines and the recommendations of the advisory committee.

Paragraph (c) provides that help desks and other support services serving an agency must be capable of accommodating the communications needs of persons with disabilities. For example, an agency help desk may need to communicate through a TTY. The help desk or support service must also be familiar with such features as keyboard access and other options important to people with disabilities. This provision is consistent with the Telecommunications Act Accessibility Guidelines and the recommendations of the advisory committee.

The advisory committee also recommended that any training provided by manufacturers, providers or other parties, accommodate the functional capabilities of all participants. The Board has not included this provision since Federal employees already have a right to accessible training under section 504 and other provisions of the Rehabilitation Act.

Regulatory Process Matters

Executive Order 12866: Regulatory Planning and Review and Congressional Review Act

This proposed rule is an economically significant regulatory action under Executive Order 12866 and has been reviewed by the Office of Management and Budget (OMB). The proposed rule is also a major rule under the Congressional Review Act. The Board has prepared a regulatory assessment for the proposed rule which has been placed in the docket and is available for public inspection. The regulatory assessment is also available on the Board's Internet site (http://www.access-board.gov/rules/508nprm.htm).

Section 508 covers the development, procurement, maintenance or use of electronic and information technology by Federal agencies. Exemptions are provided by statute for national security systems and for instances where compliance would impose an undue burden on an agency. The proposed rule improves the accessibility of electronic and information technology used by the Federal government and will affect Federal employees with disabilities, as well as members of the public with disabilities who seek to use Federal electronic and information technologies to access information. The proposed rule is based largely on the recommendations of the Electronic and Information Technology Access Advisory Committee.

The standards in the proposed rule will be incorporated into the Federal Acquisition Regulation (FAR). Failure of a Federal agency to comply with the standards may result in a complaint under the agency's existing complaint procedures under section 504 of the Rehabilitation Act or a civil action seeking to enforce compliance with the standards.

Estimated Baseline of Federal Spending for Electronic and Information Technology

According to OMB projections, Federal government expenditures for information technology products will be $38 billion in fiscal year 2000. The defense agencies appear to have the highest information technology budgets, while civilian agency budgets are expected to increase rapidly. It was not possible however, to disaggregate this data such that it was useful for purposes of a regulatory assessment. Instead, the regulatory assessment uses annual sales data collected from the General Services Administration (GSA) as a proxy for the actual number of products in each applicable technology category. Using the GSA data, the regulatory assessment estimates that the Federal government spends approximately $12.4 billion annually on electronic and information technology products covered by the proposed rule. This estimate likely understates the actual spending by the Federal government because it is limited to the GSA data. Agencies are not required to make purchases through the GSA supply service, thus many items are purchased directly from suppliers. As a result, the government costs for software and compatible hardware products may actually be higher than estimates would indicate.

The regulatory assessment also examines historical budgetary obligations for information technology tracked by OMB until 1998. Two scenarios were examined to develop an upper and lower bound to represent the proportion expected to be potentially affected by the proposed rule. During a five year period from fiscal year 1994 through fiscal year 1998, the average proportion of the total information technology obligations potentially covered by the proposed rule ranged between 25 percent and 50 percent. The $12.4 billion GSA estimate falls within this range, representing 33 percent of the total fiscal year 1999 information technology obligations of $38 billion. One limitation of these ranges is that they are based on gross classifications of information technology obligations and do not provide the level of disaggregation necessary to parallel the GSA data assessment. As a result, the two scenarios likely include expenditures on products and services that would not be effected by the proposed rule to a higher degree than the data obtained from GSA.

The degree to which the potential understatement of baseline spending leads to an understatement of the cost of the proposed rule is unclear. Some of the components of the estimated cost of the proposed rule rely heavily on the level of Federal spending while others are independent of this number.

Question 9: The Board seeks information, other than that collected from GSA, which would provide additional product specific data to further assess the cost impact of this rule. The data should cover either the entire, or at least a representative majority, of Federal government acquisitions of electronic and information technology; or capture non-GSA procurements.

Estimated Cost of Proposed Rule

The regulatory assessment includes both direct and opportunity costs associated with the proposed rule. Major sources of cost include:

- Costs of modifying electronic and information technology to meet the substantive requirements of the standards;
- Training of staff, both Federal and manufacturers, to market, support, and use technologies modified in response to the standards; and
- Translation of documentation and instructions into alternate formats.

The direct costs that were quantified are shown in Table 1. The total quantified costs to society range from $177 million to $1,068 million annually. The Federal proportion of these costs is estimated to range between $85 million and $691 million. The ability of manufacturers, especially software manufacturers, to distribute these costs over the general consumer population will determine the actual proportion shared by the Federal government.

Assuming that the addition of accessibility features add value to the products outside the Federal government, it is expected that the costs will be distributed across society thereby setting a lower bound cost to the Federal government of $85 million. If manufacturers do not distribute the costs across society, the upper bound of the Federal cost will increase to an estimated $1,068 million. These costs must be placed in appropriate context by comparing them with the total Federal expenditures for information technology. By comparison, the lower and upper bound of the incremental costs represent a range of 0.23 percent to 2.8 percent of the $38 billion spent by the Federal government on information technology in fiscal year 1999. Although the regulatory assessment does not analyze the timing of expenditures or reductions in costs over time, it is expected that the costs will decrease over time as a proportion of total electronic and information technology spending.

TABLE 1

Electronic and information technology	Lower bound cost estimates (millions)	Upper bound cost estimates (millions)
General Office Software	$110	$456
Mission Specific Software	10	52
Compatible Hardware Products	.....	337
Document Management Products	56	222
Microphotographic Products	0.1	0.4
Other Miscellaneous Products	0.2	1
Total Social Cost	177	1,068
Estimated Federal Proportion	85	[1]691

[1] As noted above, if manufacturers do not distribute the costs across society, the upper bound of the Federal cost will increase to an estimated $1,068 million.

Accessible alternatives are available to satisfy the requirements of the proposed rule for many types of electronic and information technologies, particularly computers and software products. Some electronic and information technology products will require modifications to meet the requirements of the proposed standards.

For many types of electronic and information technology, the proposed rule focuses on compatibility with existing and future assistive devices, such as screen readers. The proposed rule does not require that assistive technologies be provided universally. Provision of assistive technologies is still governed by the reasonable accommodation requirements contained in sections 501 and 504 of the Rehabilitation Act. Section 508 does not require that assistive devices be purchased, but it does require that covered electronic and information technology be capable of having such devices added at some later time as necessary.

Software products represent the largest part of the estimated costs. The regulatory assessment assumes that Federal software expenditures can be divided into two major subcategories: general office applications and mission-specific applications. Internet applications are assumed to be represented within each of these subcategories. General office applications include operating systems, wordprocessors, and spreadsheets, and are assumed to represent 80 percent of the total software category. The remaining 20 percent covers mission-specific or proprietary applications that have limited distribution outside the Federal government. Within each subcategory, the estimated costs of the proposed rule are distributed according to the level or degree of accessibility already being achieved in the private sector.

The general office application subcategory is broken into three groups based on discussions with several industry experts. The first 30 percent is expected to require very little modification to satisfy the proposed standards and therefore no incremental cost is associated with this group. The middle 40 percent is expected to require minor to medium alterations to satisfy the proposed rule. The cost of modifying a particular general office application in this category is estimated to be in the range of 0.4 percent to 1 percent based on discussions with several manufacturers. This assumption is based on the ratio of employees dedicated to accessibility issues. The methodology uses employee classification as a proxy for cost or expense of accessibility research and development, labor, and design that are all factored into the final product cost. The remaining 30 percent is expected to require significant modifications to meet the requirements of the proposed rule, which is estimated to cost in the range of 1 percent to 5 percent based on discussion with industry experts.

The regulatory assessment assumes that the remaining 20 percent of the software products purchased by the Federal government represent proprietary or mission-specific software with limited distribution outside the government. These products will require significant modification to satisfy the proposed rule. Based on discussions with industry experts, the cost increase associated with achieving the level of accessibility required by the proposed rule is estimated to range from 1 percent to 5 percent.

Question 10: The Board requests comments on the assumptions applied to determine the cost associated with software products. The Board also seeks comment on alternative methods or data sources for evaluating the Federal government's expenditure on software products.

Estimated Benefits of Proposed Rule

The benefits associated with the proposed rule results from increased access to electronic and information technology for Federal employees with disabilities and members of the public seeking Federal information provided using electronic and information technology. This increased access reduces barriers to employment in the Federal government for persons with disabilities, reduces the probability that Federal employees with disabilities will be underemployed, and increases the productivity of Federal work teams. The proposed standards may also have benefits for people outside the Federal workforce, both with and without disabilities, as a result of spillover of technology from the Federal government to the rest of society.

Two methods are presented in the regulatory assessment for evaluating the quantifiable benefits of the proposed rule. The first is a wage gap analysis that attempts to measure the difference in wages between the general Federal workforce and Federal workers with disabilities (*i.e.,* targeted and reportable). While this analysis is limited to white collar Federal workers due to data constraints, the potential change in productivity is measured by the difference between the weighted average salary for all white collar Federal employees and the average within the two disability classes. This assumes that an increase in accessibility will help diminish this wage gap by increasing worker productivity.

The alternative is a team based approach for measuring the productivity of Federal workers. This approach is

based on the assumption that a Federal workers wage rate reflects their productivity and the scarcity of their skills in the labor market. However this may not apply to Federal wage rates, thus the average productivity of a Federal team is assumed to be equivalent to the average Federal wage rate. Based on this average rate, it is assumed that the proposed rule will produce an increase in productivity ranging between 5 percent and 10 percent.

Since no data have been identified to support the increase in productivity in the team based approach, the wage gap analysis is used to represent the benefits generated by the proposed rule shown in Table 2. Keeping in mind certain data limitations with this analysis, the benefits derived from the wage gap method do not account for benefits that may be accrued by the general public or other Federal workers due to spillover effects of increased accessibility resulting from the proposed standards.

TABLE 2

Productivity increase	Aggregate benefits range (millions)
Lower Bound	.....
Upper Bound	$466

Not all government policies are based on maximizing economic efficiency. Some policies are based on furthering the rights of certain classes of individuals to achieve more equitable results, regardless of the effect on economic efficiency. Accessibility to electronic information and technology is an essential component of civil rights for persons with disabilities. The proposed rule will ensure that Federal employees with disabilities will have access to electronic and information technology used by the Federal government that is comparable to that of Federal employees without disabilities; and that members of the public with disabilities will have comparable access to information and services provided to members of the public without disabilities through the use of Federal electronic and information technology.

Based on Bureau of Census statistics from 1994,[14] 20.6 percent or 54 million persons in the United States have some level of disability. By increasing the accessibility of electronic and information technology used by the Federal government, the proposed rule may also improve future employment opportunities in the Federal government for persons with disabilities currently employed by the Federal government, and for persons that are working in the private sector or are classified as not being active in the labor force. Increasing the accessibility of electronic and information technology increases the productivity and mobility of the disabled sector of the labor pool that, under existing conditions, may face barriers to their employment and advancement within the Federal workforce and in the private sector.

Question 11: The Board requests comment on the sufficiency of the benefits assessment and seeks recommendations for alternative methods of evaluating the benefits generated by the proposed rule for persons with disabilities, including the public as a whole.

Executive Order 13132: Federalism

By its terms, this proposed rule focuses on the development, procurement, maintenance or use by Federal agencies of electronic and information technology. As such, the Board believes that it does not have federalism implications within the meaning of Executive Order 13132. The Board is aware, however, that the Department of Education interprets the Assistive Technology Act (the ''AT Act''), 29 U.S.C. 3001, to require that States receiving assistance under the AT State Grants program to comply with section 508, including these standards. The Department of Education, the agency responsible for administering the AT Act, has advised the Board that it plans to issue guidance to explain specifically how these proposed standards would apply to the States for purposes of the AT Act. In this regard, the Department of Education plans to consult with State and local governments in a manner consistent with the requirements of Executive Order 13132, and to urge them to comment to the Access Board on the content of the proposed rule during the public comment period. The Board recommends that any other Federal agency considering whether (or how) to apply these standards to non-Federal entities, or any agency required to apply these standards to non-Federal entities by provision of law, should similarly conduct an appropriate consultation process with all affected stakeholders. The Board welcomes comment on any federalism implications associated with this proposed rule.

Unfunded Mandates Reform Act

The Unfunded Mandates Reform Act does not apply to proposed or final rules that enforce constitutional rights of individuals or enforce any statutory rights that prohibit discrimination on the basis of race, color, sex, national origin, age, handicap, or disability. Since the proposed rule is issued under the authority of section 508, part of title V of the Rehabilitation Act of 1973 which establishes civil rights protections for individuals with disabilities, an assessment of the rule's effects on State, local, and tribal governments, and the private sector is not required by the Unfunded Mandates Reform Act.

List of Subjects in 36 CFR Part 1194

Civil rights, Communications equipment, Computer technology, Electronic products, Government employees, Government procurement, Individuals with disabilities, Reporting and recordkeeping requirements, Telecommunications.

Thurman M. Davis, Sr.,

Chair, Architectural and Transportation Barriers Compliance Board.

For the reasons set forth in the preamble, the Board proposes to add part 1194 to Chapter XI of title 36 of the Code of Federal Regulations to read as follows:

PART 1194—ELECTRONIC AND INFORMATION TECHNOLOGY ACCESSIBILITY STANDARDS

Subpart A—General

Sec.
1194.1 Purpose.
1194.2 Application.
1194.3 General exceptions.
1194.4 Definitions.
1194.5 Equivalent facilitation.

Subpart B—Accessibility Standards

1194.21 General requirements.
1194.23 Component specific requirements.
1194.25 Requirements for compatibility with assistive technology.
1194.27 Functional performance criteria.

Subpart C—Information, Documentation, and Support

1194.31 Information, documentation, and support.

Figures to Part 1194

Authority: 29 U.S.C. 794d.

Subpart A—General

§ 1194.1 Purpose.

The purpose of this part is to implement section 508 of the Rehabilitation Act of 1973, as amended (29 U.S.C. 794d). Section 508 requires that when Federal agencies develop, procure, maintain, or use electronic and information technology, Federal

[14] U.S. Department of Commerce, Economics and Statistics Administration, ''Americans with Disabilities: 1994–95'' (P70–61), August 1997.

employees with disabilities have access to and use of information and data that is comparable to the access and use by Federal employees who are not individuals with disabilities, unless an undue burden would be imposed on the agency. Section 508 also requires that individuals with disabilities, who are members of the public seeking information or services from a Federal agency, have access to and use of information and data that is comparable to that provided to the public who are not individuals with disabilities, unless an undue burden would be imposed on the agency.

§ 1194.2 Application.

(a) When developing, procuring, maintaining, or using electronic and information technology, each agency shall comply with the requirements of this part, unless an undue burden would be imposed on the agency.

(1) When compliance with the requirements of this part imposes an undue burden, agencies shall provide individuals with disabilities with the information and data involved by an alternative means of access that allows the individual to use the information and data.

(2) When procuring a product, if an agency determines that compliance with any requirement of this part imposes an undue burden, the documentation by the agency supporting the procurement shall explain why, and to what extent, compliance with each such requirement creates an undue burden.

(b) Except as provided by § 1194.3(b), this part applies to electronic and information technology developed, procured, maintained, or used by agencies directly or used by a contractor under a contract with an agency which requires the use of such product, or requires the use, to a significant extent, of such product in the performance of a service or the furnishing of a product.

(c) This part applies to products procured by agencies when such products are:

(1) Available in the commercial marketplace;

(2) Not yet available in the commercial marketplace, but through advances in technology or performance will be available in time to satisfy the delivery requirements under a Government solicitation; or

(3) Developed in response to a Government solicitation.

(d) Products required to be accessible shall comply with all applicable provisions of this part. Section 1194.21 provides requirements that apply generally to all products. Section 1194.23 provides requirements for specific components of products and shall be applied to each component. Products may have more than one component. Section 1194.25 provides requirements for compatibility of products with assistive technology commonly used by individuals with disabilities. Section 1194.27 provides functional performance criteria for overall product evaluation and for technologies or components for which there is no specific requirement under other sections. Section 1194.31 provides requirements for information, documentation, and support.

§ 1194.3 General exceptions.

(a) This part does not apply to any telecommunications or information system operated by agencies, the function, operation, or use of which involves intelligence activities, cryptologic activities related to national security, command and control of military forces, equipment that is an integral part of a weapon or weapons system, or systems which are critical to the direct fulfillment of military or intelligence missions. Systems which are critical to the direct fulfillment of military or intelligence missions do not include a system that is to be used for routine administrative and business applications (including payroll, finance, logistics, and personnel management applications).

(b) This part does not apply to electronic and information technology that is acquired by a contractor incidental to a contract.

(c) Except as required to comply with the standards in this part, this part does not require the installation of specific accessibility-related software or the attachment of an assistive technology device at a workstation of a Federal employee who is not an individual with a disability.

(d) When agencies provide access to the public to information or data through electronic and information technology, agencies are not required to make equipment owned by the agency available for access and use by individuals with disabilities at a location other than that where the electronic and information technology is provided to the public, or to purchase equipment for access and use by individuals with disabilities at a location other than that where the electronic and information technology is provided to the public.

(e) This part shall not be construed to require a fundamental alteration in the nature of a product or its components.

§ 1194.4 Definitions.

The following definitions apply to this part:

Accessible. Electronic and information technology which complies with the requirements of this part.

Agency. Any Federal department or agency, including the United States Postal Service.

Alternate formats. Alternate formats usable by people with disabilities may include, but are not limited to, Braille, ASCII text, large print, recorded audio, and accessible internet programming or coding languages.

Alternate modes. Different means of providing information, including product documentation, to people with disabilities. Alternate modes may include, but are not limited to, voice, fax, relay service, TTY, Internet posting, captioning, text-to-speech synthesis, and audio description.

Assistive technology. Any item, piece of equipment, or system, whether acquired commercially, modified, or customized, that is commonly used to increase, maintain, or improve functional capabilities of individuals with disabilities.

Electronic and information technology. Includes information technology and any equipment or interconnected system or subsystem of equipment, that is used in the creation, conversion, or duplication of data or information. The term electronic and information technology includes, but is not limited to, telecommunications products (such as telephones), information kiosks and transaction machines, World Wide Web sites, multimedia, and office equipment such as copiers and fax machines. The term does not include any equipment that contains imbedded information technology that is used as an integral part of the product, but the principal function of which is not the acquisition, storage, manipulation, management, movement, control, display, switching, interchange, transmission, or reception of data or information. For example, HVAC (heating, ventilation, and air conditioning) equipment such as thermostats or temperature control devices, and medical equipment where information technology is integral to its operation, are not information technology.

Information technology. Any equipment or interconnected system or subsystem of equipment, that is used in the automatic acquisition, storage, manipulation, management, movement, control, display, switching, interchange, transmission, or reception of data or information. The term *information technology* includes computers,

ancillary equipment, software, firmware and similar procedures, services (including support services), and related resources.

Operable controls. A component of a product that requires physical contact for normal operation. Operable controls include, but are not limited to, mechanically operated controls, paper trays, card slots, keyboards, or keypads.

Product. Electronic and information technology.

Telecommunications. The transmission, between or among points specified by the user, of information of the user's choosing, without change in the form or content of the information as sent and received.

TTY. An abbreviation for teletypewriter. Machinery or equipment that employs interactive text based communications through the transmission of coded signals across the telephone network. TTYs may include, for example, devices known as TDDs (telecommunication display devices or telecommunication devices for deaf persons) or computers with special modems. TTYs are also called text telephones.

Undue burden. Undue burden means significant difficulty or expense. In determining whether an action would result in an undue burden, an agency shall consider all agency resources available to the agency or components for which the product is being developed, procured, maintained, or used.

§ 1194.5 Equivalent facilitation.

Nothing in this part is intended to prevent the use of designs or technologies as alternatives to those prescribed in this part provided they result in substantially equivalent or greater access to and use of a product for people with disabilities.

Subpart B—Accessibility Standards

§ 1194.21 General requirements.

(a) Color coding shall not be used as the only means of conveying information, indicating an action, prompting a response, or distinguishing a visual element.

(b) Products which are freestanding, non-portable, and intended to be used in one location and which have operable controls shall comply with the following:

(1) The position of any operable control shall be determined with respect to a vertical plane, which is 48 inches in length, centered on the operable control, and at the maximum protrusion of the product within the 48 inch length (see Fig. 1 of this part).

(2) Where any operable control is 10 inches or less behind the reference plane, the height shall be 54 inches maximum and 15 inches minimum above the floor.

(3) Where any operable control is more than 10 inches and not more than 24 inches behind the reference plane, the height shall be 46 inches maximum and 15 inches minimum above the floor.

(4) Operable controls shall not be more than 24 inches behind the reference plane (see Fig. 2 of this part).

(c) When flashing or blinking text, objects, or other elements are displayed, the flash rate shall not exceed two Hertz.

(d) If a timed response is required, at least one mode which does not require users to respond within a timed interval or allows users to adjust the timing and repetition of those intervals to at least 5 times the default setting, shall be provided.

(e) Where biometric forms of user identification or activation are used, an alternative form of identification or activation, which does not require the user to possess particular biological characteristics, shall also be provided.

(f) Where touchscreens or touch-operated controls are used, such controls shall be operable without requiring body contact or close human body proximity, or all of the operations and functions that are available through such controls shall be made available through an alternate mode that does not require body contact or close human body proximity.

§ 1194.23 Component specific requirements.

(a) *Mechanically operated controls, keyboards or keypads.* (1) Controls and keys shall be tactilely discernible without activating the controls or keys.

(2) The status of all locking or toggle controls or keys shall be visually discernible, and discernible either through touch or sound.

(3) Controls shall be operable with one hand and shall not require tight grasping, pinching, or twisting of the wrist. The force required to activate controls shall be 5 lbs. (22.2 N) maximum.

(4) All actions available or required by the product shall be available from the keyboard or keypad.

(5) If keyboard repeat is supported, the keyboard delay before repeat shall be adjustable to at least 2 seconds. Key repeat rate shall be adjustable to 2 seconds per character.

(b) *Non-embedded software applications and operating systems.*

(1) Logical navigation among interface elements shall be provided by use of keystrokes.

(2) Software shall not interfere with existing features of other products or operating systems that affect the usability for people with disabilities.

(3) A well-defined on-screen indication of the current focus shall be provided that moves among interactive interface elements as the input focus changes. The focus shall be programmatically exposed so that assistive technology can track focus and focus changes.

(4) Sufficient information about a user interface element including the identity, operation and state of the element shall be available to assistive technology.

(5) Where an image represents an interface element or the state of an interface element, there must be a way for assistive technology to associate meaningful text with the image.

(6) The use of images shall be consistent throughout an application.

(7) Text shall be provided through an application programming interface supporting interaction with assistive technology or use system text writing tools. The minimum information that shall be available to assistive technology is text content, text input caret location, and text attributes.

(8) A minimum of 8 foreground and 8 background color selections capable of producing a variety of contrast levels shall be provided.

(9) An option shall be provided to ignore individual application display attributes so system-wide settings will be maintained.

(10) Electronic forms shall allow people using assistive technology to access the information, field elements, and functionality required for completion and submission of the form including all directions and cues. Inaccessible electronic forms may be used, if an alternative accessible electronic form with equivalent information, field elements, and functionality is also provided.

(11) If animated or moving text is provided it shall also be displayable in at least one static presentation mode at the option of the user.

(c) *Web-based information or applications.*

(1) A text equivalent for every non-text element shall be provided via ''alt'' (alternative text attribute), ''longdesc'' (long description tag), or in element content.

(2) Web pages shall be designed so that all information required for navigation or meaning is not dependent on the ability to identify specific colors.

(3) Changes in the natural language (*e.g.,* English to French) of a document's text and any text equivalents shall be clearly identified.

(4) Documents shall be organized so they are readable without requiring an associated style sheet.

(5) Web pages shall update equivalents for dynamic content whenever the dynamic content changes.

(6) Redundant text links shall be provided for each active region of a server-side image map.

(7) Client-side image maps shall be used whenever possible in place of server-side image maps.

(8) Data tables shall provide identification of row and column headers.

(9) Markup shall be used to associate data cells and header cells for data tables that have two or more logical levels of row or column headers.

(10) Frames shall be titled with text that facilitates frame identification and navigation.

(11) Pages shall be usable when scripts, applets, or other programmatic objects are turned off or are not supported, or shall provide equivalent information on an alternative accessible page.

(12) Equivalent alternatives for any multimedia presentation shall be synchronized with the presentation.

(13) An appropriate method shall be used to facilitate the easy tracking of page content that provides users of assistive technology the option to skip repetitive navigation links.

(d) *Telecommunications functions.* (1) Telecommunications products which provide a function allowing voice communication and which do not themselves provide a TTY functionality shall provide a standard non-acoustic connection point for TTYs. It shall also be possible for the user to easily turn any microphone on and off to allow the user to intermix speech with TTY use.

(2) Telecommunications products which include voice communication functionality shall support use of all cross-manufacturer non-proprietary standard signals used by TTYs.

(3) Voice mail, auto-attendant, and interactive voice response telecommunications systems shall be usable by TTY users with their TTYs.

(4) Voice mail, messaging, auto-attendant, and interactive voice response telecommunications systems shall provide at least one mode which does not require users to respond within a timed interval or allows users to adjust the timing and repetition of those intervals to a minimum of 5 times the default.

(5) Where provided, caller identification and similar telecommunications functions shall also be available for users of TTYs, telecommunications relay services, and for users who cannot see displays.

(6) For transmitted voice signals, telecommunications products shall provide a gain adjustable up to a minimum of 20 dB. For incremental volume control, at least one intermediate step of 12 dB of gain shall be provided.

(7) If the telecommunications product allows a user to adjust the receive volume, a function shall be provided to automatically reset the volume to the default level after every use but not before.

(8) Where a telecommunications product delivers output by an audio transducer, which is normally held up to the ear, a means for effective magnetic wireless coupling to hearing technologies shall be provided.

(9) Interference to hearing technologies (including hearing aids, cochlear implants, and assistive listening devices) shall be reduced to the lowest possible level that allows a user of hearing technologies to utilize the telecommunications product.

(e) *Video or multimedia products.* (1) All television displays 13 inches and larger, and computer equipment that includes television receiver circuitry, shall be equipped with caption decoder circuitry which appropriately receives, decodes, and displays closed captions from broadcast, cable, videotape, and DVD signals.

(2) Television tuners, including tuner cards for use in computers, shall be equipped with secondary audio program playback circuitry.

(3) All video and multimedia productions, regardless of format, that contain speech or other audio necessary for the comprehension of the content, shall be open or closed captioned if the production is procured or developed for repeated showings to audiences that may include people with hearing impairments.

(4) All video and multimedia productions, regardless of format, that contain visual information necessary for the comprehension of the content, shall be audio described if the production is procured or developed for repeated showings to audiences that may include people with visual impairments.

(5) Display or presentation of alternate text presentation or audio descriptions shall be user-selectable unless permanent.

(f) *Information kiosks and transaction machines.* (1) Information kiosks and transaction machines shall be usable by people with disabilities without requiring an end-user to attach assistive technology to the information kiosk or transaction machine.

(2) Where information kiosks and transaction machines deliver audio output, including speech, a mechanism shall be provided for private listening and user interruptability.

(3) Where information kiosks and transaction machines deliver voice output, incremental volume control shall be provided with output amplification up to a level of at least 65 dB. Where the ambient noise level of the environment is above 45 dB, a volume gain of at least 20 dB above the ambient level shall be user selectable.

§ 1194.25 Requirements for compatibility with assistive technology.

(a) All products that act as a transport or conduit for information or communication shall pass through cross-manufacturer, non-proprietary, industry-standard codes, translation protocols, formats or other information necessary to provide the information or communication in a usable format. Technologies which use encoding, signal compression, format transformation, or similar techniques shall not remove information needed for access or shall restore it upon delivery.

(b) Where provided, at least one of each type of expansion slots, ports and connectors shall comply with publicly available industry standards.

(c) Operating system software shall not interfere with assistive technology.

(d) Products providing auditory output shall provide the auditory signal at a standard signal level through an industry standard connector.

§ 1194.27 Functional performance criteria.

(a) At least one mode of operation and information retrieval that does not require user vision shall be provided, or support for assistive technology used by people who are blind or visually impaired shall be provided.

(b) At least one mode of operation and information retrieval that does not require visual acuity greater than 20/70 shall be provided in audio and enlarged print output working together or independently, or support for assistive technology used by people who are visually impaired shall be provided.

(c) At least one mode of operation and information retrieval that does not require user hearing shall be provided, or support for assistive technology used by people who are deaf or hard of hearing shall be provided.

(d) Where audio information is important for the use of a product, at least one mode of operation and information retrieval shall be provided in an enhanced auditory fashion.

(e) At least one mode of operation and information retrieval that does not

require user speech shall be provided, or support for assistive technology shall be provided.

(f) At least one mode of operation and information retrieval that does not require fine motor control or simultaneous actions and that is operable with limited reach and strength shall be provided.

Subpart C—Information, Documentation, and Support

§ 1194.31 Information, documentation, and support.

(a) Agencies shall ensure that any product support documentation provided by the agency to end-users, is available in alternate formats upon request, at no additional charge.

(b) Agencies shall ensure that end-users have access to a description of the accessibility and compatibility features of products provided by the agency in alternate formats or alternate modes upon request, at no additional charge.

(c) Agencies shall ensure that support services for products provided by the agency, will accommodate the communication needs of end-users with disabilities.

BILLING CODE 8150–01–P

Figures to Part 1194

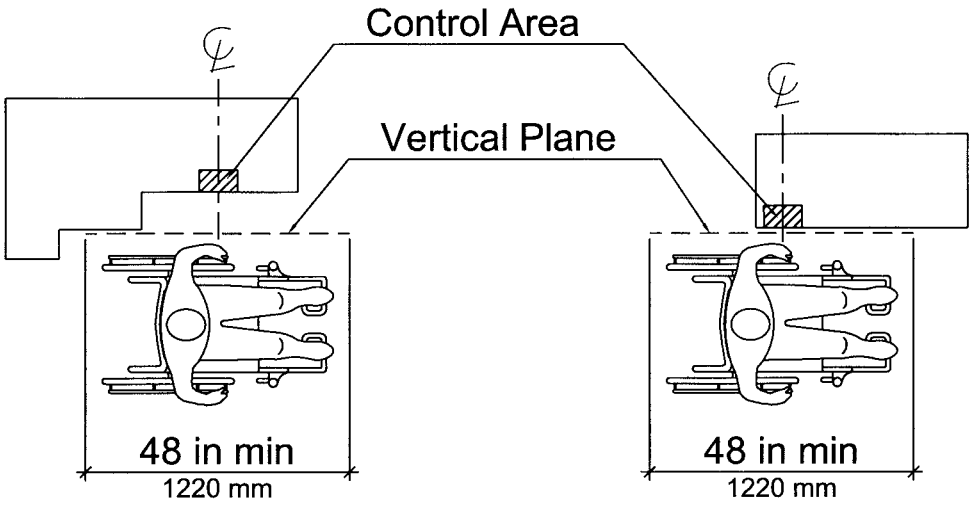

Vertical Plane Relative to the Operable Control

Figure 1

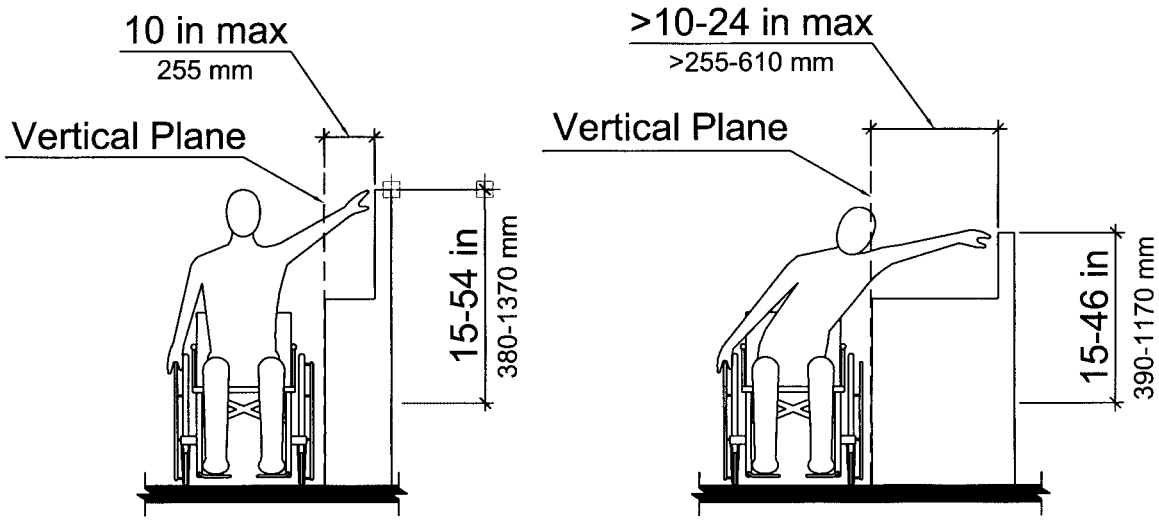

Height of Operable Control Relative to the Vertical Plane

Figure 2

[FR Doc. 00–7719 Filed 3–30–00; 8:45 am]
BILLING CODE 8150–01–C