AUTHENTICATED
U.S. GOVERNMENT
INFORMATION
GPO

# Federal Register

4–20–00 Thursday
Vol. 65 No. 77 Apr. 20, 2000
Pages 21111–21300

The **FEDERAL REGISTER** is published daily, Monday through Friday, except official holidays, by the Office of the Federal Register, National Archives and Records Administration, Washington, DC 20408, under the Federal Register Act (44 U.S.C. Ch. 15) and the regulations of the Administrative Committee of the Federal Register (1 CFR Ch. I). The Superintendent of Documents, U.S. Government Printing Office, Washington, DC 20402 is the exclusive distributor of the official edition.

The **Federal Register** provides a uniform system for making available to the public regulations and legal notices issued by Federal agencies. These include Presidential proclamations and Executive Orders, Federal agency documents having general applicability and legal effect, documents required to be published by act of Congress, and other Federal agency documents of public interest.

Documents are on file for public inspection in the Office of the Federal Register the day before they are published, unless the issuing agency requests earlier filing. For a list of documents currently on file for public inspection, see http://www.nara.gov/fedreg.

**The seal of the National Archives and Records Administration authenticates the Federal Register** as the official serial publication established under the Federal Register Act. Under 44 U.S.C. 1507, the contents of the **Federal Register** shall be judicially noticed.

The **Federal Register** is published in paper and on 24x microfiche. It is also available online at no charge as one of the databases on GPO Access, a service of the U.S. Government Printing Office.

The online edition of the **Federal Register** is issued under the authority of the Administrative Committee of the Federal Register as the official legal equivalent of the paper and microfiche editions (44 U.S.C. 4101 and 1 CFR 5.10). It is updated by 6 a.m. each day the **Federal Register** is published and it includes both text and graphics from Volume 59, Number 1 (January 2, 1994) forward.

GPO Access users can choose to retrieve online **Federal Register** documents as TEXT (ASCII text, graphics omitted), PDF (Adobe Portable Document Format, including full text and all graphics), or SUMMARY (abbreviated text) files. Users should carefully check retrieved material to ensure that documents were properly downloaded.

On the World Wide Web, connect to the **Federal Register** at http://www.access.gpo.gov/nara. Those without World Wide Web access can also connect with a local WAIS client, by Telnet to swais.access.gpo.gov, or by dialing (202) 512-1661 with a computer and modem. When using Telnet or modem, type swais, then log in as guest with no password.

For more information about GPO Access, contact the GPO Access User Support Team by E-mail at gpoaccess@gpo.gov; by fax at (202) 512–1262; or call (202) 512–1530 or 1–888–293–6498 (toll free) between 7 a.m. and 5 p.m. Eastern time, Monday–Friday, except Federal holidays.

The annual subscription price for the **Federal Register** paper edition is $638, or $697 for a combined **Federal Register,** Federal Register Index and List of CFR Sections Affected (LSA) subscription; the microfiche edition of the **Federal Register** including the Federal Register Index and LSA is $253. Six month subscriptions are available for one-half the annual rate. The charge for individual copies in paper form is $9.00 for each issue, or $9.00 for each group of pages as actually bound; or $2.00 for each issue in microfiche form. All prices include regular domestic postage and handling. International customers please add 25% for foreign handling. Remit check or money order, made payable to the Superintendent of Documents, or charge to your GPO Deposit Account, VISA, MasterCard or Discover. Mail to: New Orders, Superintendent of Documents, P.O. Box 371954, Pittsburgh, PA 15250–7954.

There are no restrictions on the republication of material appearing in the **Federal Register.**

**How To Cite This Publication:** Use the volume number and the page number. Example: 65 FR 12345.

## SUBSCRIPTIONS AND COPIES

| | |
|---|---|
| **PUBLIC** | |
| **Subscriptions:** | |
| Paper or fiche | **202–512–1800** |
| Assistance with public subscriptions | **512–1806** |
| **General online information** | **202–512–1530; 1–888–293–6498** |
| **Single copies/back copies:** | |
| Paper or fiche | **512–1800** |
| Assistance with public single copies | **512–1803** |
| **FEDERAL AGENCIES** | |
| **Subscriptions:** | |
| Paper or fiche | **523–5243** |
| Assistance with Federal agency subscriptions | **523–5243** |

Printed on recycled paper.

# Contents

**Federal Register**

Vol. 65, No. 77

Thursday, April 20, 2000

**Agriculture Department**
*See* Animal and Plant Health Inspection Service
*See* Federal Crop Insurance Corporation
RULES
Supplemental standards of ethical conduct for Agriculture Department employees
Correction, 21239

**Air Force Department**
NOTICES
Patent licenses; non-exclusive, exclusive, or partially exclusive:
SMJ Carbon Technology, 21172

**Animal and Plant Health Inspection Service**
RULES
Plant-related quarantine, foreign:
Wood chips from Chile, 21120–21128

**Army Department**
*See* Engineers Corps

**Centers for Disease Control and Prevention**
NOTICES
Agency information collection activities:
Proposed collection; comment request, 21199–21200

**Coast Guard**
RULES
Ports and waterways safety:
Cape Elizabeth, ME; safety zone, 21142–21143
Regattas and marine parades:
Harvard-Yale Regatta, 21141–21142
NOTICES
Meetings:
Commercial fishing vessel safety listening sessions, 21233

**Commerce Department**
*See* Export Administration Bureau
NOTICES
Privacy Act:
Systems of records, 21168–21169

**Committee for the Implementation of Textile Agreements**
NOTICES
Cotton, wool, and man-made textiles:
Philippines, 21170–21171
Thailand, 21171–21172

**Customs Service**
RULES
Organization and functions; field organization, ports of entry, etc.:
Gramercy, LA; port of entry boundary description, 21138–21139

**Defense Department**
*See* Air Force Department
*See* Engineers Corps

**Education Department**
NOTICES
Grants and cooperative agreements; availability, etc.:
Educational research and improvement—
Comprehensive school reform research, 21284–21286

**Energy Department**
*See* Energy Information Administration
*See* Federal Energy Regulatory Commission

**Energy Information Administration**
NOTICES
Agency information collection activities:
Proposed collection; comment request, 21172–21174

**Engineers Corps**
PROPOSED RULES
Permits for discharges of dredged or fill material into U.S. waters:
Fill material and discharge of fill material; definitions, 21292–21300

**Environmental Protection Agency**
PROPOSED RULES
Permits for discharges of dredged or fill material into U.S. waters:
Fill material and discharge of fill material; definitions, 21292–21300
NOTICES
Agency information collection activities:
Proposed collection; comment request, 21177–21178
Meetings:
Local Government Advisory Committee, 21178
Superfund; response and remedial actions, proposed settlements, etc.:
Double A Metals Site, IL, 21178
Toxic and hazardous substances control:
Lead-based paint activities in target housing and child-occupied facilities; State and Indian Tribe authorization applications—
Michigan, 21178–21181

**Executive Office of the President**
*See* Management and Budget Office
*See* Presidential Documents

**Export Administration Bureau**
NOTICES
Export privileges, actions affecting:
Thane-Coat, Inc., et al., 21169–21170

**Farm Credit Administration**
RULES
Farm credit system:
Federal regulatory review, 21128–21129
PROPOSED RULES
Farm credit system:
Loan policies and operations, etc.—
Other financial institutions lending, 21151–21154

**Federal Aviation Administration**
RULES
Airworthiness directives:
McDonnell Douglas, 21134–21136
Robinson Helicopter Co., 21136–21138
Transport category airplanes—
Mode ''C'' transponders with single Gillham code altitude input; withdrawn, 21133–21134
PROPOSED RULES
Airworthiness directives:
Airbus, 21154–21159
Sikorsky, 21159–21164

**Federal Communications Commission**
NOTICES
Agency information collection activities:
Proposed collection; comment request, 21181–21182
Common carrier services:
Wireless telecommunications services—
700 MHz guard bands; licenses auction; reserve prices or minimum opening bids, etc., 21182–21196
Fixed, mobile, and broadcasting services in 747-762 and 777-792 MHz bands; licenses auction, 21196–21197

**Federal Crop Insurance Corporation**
PROPOSED RULES
Crop insurance regulations:
Small grains crop insurance provisions and wheat crop insurance winter coverage endorsement, 21144–21151

**Federal Deposit Insurance Corporation**
NOTICES
Meetings; Sunshine Act, 21197

**Federal Election Commission**
NOTICES
Meetings; Sunshine Act, 21197

**Federal Energy Regulatory Commission**
NOTICES
Hydroelectric applications, 21176
National Register of Historic Places:
Programmatic agreement for managing properties; restricted service list—
New York Power Authority, 21176–21177
*Applications, hearings, determinations, etc.:*
DTE-River Rouge No. 1, L.L.C., 21174–21175
East Tennessee Natural Gas Co., 21175
TransColorado Gas Transmission Co., 21175–21176

**Federal Reserve System**
NOTICES
Banks and bank holding companies:
Change in bank control, 21197–21198
Formations, acquisitions, and mergers, 21198–21199
Formations, acquisitions, and mergers; correction, 21198

**Fish and Wildlife Service**
NOTICES
Environmental statements; availability, etc.:
Incidental take permits—
Leelanau County, MI; piping plover, 21203–21204
Southeast Virginia; red-cockaded woodpecker, 21204–21206
Meetings:
Rhinoceros and tiger conservation; educational outreach program action plan; development and execution; comment request, 21206–21207

**Food and Drug Administration**
NOTICES
Human drugs:
Parenteral multivitamin products; drug efficacy study implementation, 21200–21201
Meetings:
Medical Devices Advisory Committee, 21201–21202

**Health and Human Services Department**
*See* Centers for Disease Control and Prevention
*See* Food and Drug Administration
*See* Substance Abuse and Mental Health Services Administration

**Housing and Urban Development Department**
PROPOSED RULES
Public and Indian housing:
Native American housing activities—
Construction cost limits, 21288–21290
NOTICES
Agency information collection activities:
Submission for OMB review; comment request, 21203

**Interior Department**
*See* Fish and Wildlife Service
*See* Land Management Bureau
*See* Reclamation Bureau

**Internal Revenue Service**
NOTICES
Privacy Act:
Systems of records, 21236–21238

**Justice Department**
RULES
Privacy Act; implementation, 21139–21140

**Labor Department**
*See* Labor-Management Standards Office
*See* Mine Safety and Health Administration

**Labor-Management Standards Office**
RULES
Labor-management standards:
Labor organization annual financial reports; technical amendments; correction, 21140–21141

**Land Management Bureau**
NOTICES
Environmental statements; notice of intent:
Walker River Basin, NV; water and/or water rights from willing sellers, 21207–21208
Meetings:
Resource Advisory Councils—
Arizona, 21208–21209
Front Range, 21208
Upper Columbia-Salmon Clearwater District, 21208
Motor vehicle use restrictions:
Montana, 21209

**Management and Budget Office**
NOTICES
North American Industry Classification System; 2002 update, 21242–21282

**Maritime Administration**
NOTICES
Agency information collection activities:
Submission for OMB review; comment request, 21234

**Mine Safety and Health Administration**
NOTICES
Agency information collection activities:
Proposed collection; comment request, 21211–21212

**National Credit Union Administration**
RULES
Credit unions:
Organization and operations—
Low-income designated credit unions; secondary capital accounts, 21129–21131
Truth in Savings Act—
Statement disclosures; delivery in electronic form, 21131–21132

**National Science Foundation**
NOTICES
Antarctic Conservation Act of 1978; permit applications, etc., 21212

**Office of Management and Budget**
*See* Management and Budget Office

**Personnel Management Office**
RULES
Retirement:
Federal Employees Retirement System (FERS)—
Intra-agency transfer; automation and simplification of employee recordkeeping, 21119–21120

**Presidential Documents**
PROCLAMATIONS
*Special observances:*
D.A.R.E. Day, National (Proc. 7291), 21111–21112
National Park Week (Proc. 7293), 21115–21116
Organ and Tissue Donor Awareness Week, National (Proc. 7292), 21113–21114
Recall Round-Up Day, National (Proc. 7294), 21117–21118

**Public Health Service**
*See* Centers for Disease Control and Prevention
*See* Food and Drug Administration
*See* Substance Abuse and Mental Health Services Administration

**Railroad Retirement Board**
PROPOSED RULES
Railroad Unemployment Insurance Act:
Unemployment and sickness benefits; finality of decisions, 21164–21165
NOTICES
Agency information collection activities:
Submission for OMB review; comment request, 21212

**Reclamation Bureau**
NOTICES
Environmental statements; notice of intent:
Newlands Project, NV; surface water rights, 21209–21210
Reports and guidance documents; availability, etc.:
National Environmental Policy Act handbook; agency employee guidance, 21210–21211

**Securities and Exchange Commission**
NOTICES
Decimalization implementation plan; order to submit; correction, 21239
Investment Company Act of 1940:
Exemption applications—
Barclays Global Fund Advisors et al., 21215–21223
Nations Fund Trust et al., 21214–21215
Self-regulatory organizations; proposed rule changes:
American Stock Exchange LLC, 21223–21225
National Association of Securities Dealers, Inc., 21225–21227
New York Stock Exchange, Inc., 21227–21233
*Applications, hearings, determinations, etc.:*
Public utility holding company filings, 21213–21214

**Small Business Administration**
NOTICES
Agency information collection activities:
Proposed collection; comment request, 21233

**Substance Abuse and Mental Health Services Administration**
NOTICES
Agency information collection activities:
Submission for OMB review; comment request, 21202–21203

**Textile Agreements Implementation Committee**
*See* Committee for the Implementation of Textile Agreements

**Transportation Department**
*See* Coast Guard
*See* Federal Aviation Administration
*See* Maritime Administration

**Treasury Department**
*See* Customs Service
*See* Internal Revenue Service
PROPOSED RULES
Privacy Act; implementation
Internal Revenue Service, 21165–21167
NOTICES
Agency information collection activities:
Submission for OMB review; comment request, 21234–21236
Meetings:
Customs Service Commercial Operations Advisory Committee, 21236

**Veterans Affairs Department**
NOTICES
Meetings:
Prosthetics and Special-Disabilities Programs Advisory Committee, 21238
Reports and guidance documents; availability, etc.:
Special Medical Advisory Group; annual report, 21238

## Separate Parts In This Issue

**Part II**
Office of Management and Budget, 21241–21282

**Part III**
Department of Education, 21283–21286

**Part IV**
Department of Housing and Urban Development, 21287–21290

**Part V**
Department of Defense, Engineers Corps, and Environmental Protection Agency, 21291–21300

## Reader Aids

Consult the Reader Aids section at the end of this issue for phone numbers, online resources, finding aids, reminders, and notice of recently enacted public laws.

## CFR PARTS AFFECTED IN THIS ISSUE

A cumulative list of the parts affected this month can be found in the Reader Aids section at the end of this issue.


**3 CFR**

**Proclamations:**

7291.....21111
7292.....21113
7293.....21115
7294.....21117

**5 CFR**

Ch. LXXIII .....21239
841.....21119

**7 CFR**

319.....21120

**Proposed Rules:**

457.....21144

**12 CFR**

Ch. VI.....21128
701.....21129
707.....21131

**Proposed Rules:**

614.....21151
615.....21151
618.....21151

**14 CFR**

39 (3 documents) .....21133, 21134, 21136

**Proposed Rules:**

39 (3 documents) .....21154, 21157, 21159

**19 CFR**

101.....21138

**20 CFR**

**Proposed Rules:**

349.....21164

**24 CFR**

**Proposed Rules:**

1000.....21288

**28 CFR**

16 (2 documents) .....21139

**29 CFR**

403.....21140

**31 CFR**

**Proposed Rules:**

1.....21165

**33 CFR**

100.....21141
165.....21142

**Proposed Rules:**

323.....21292

**40 CFR**

**Proposed Rules:**

232.....21292

Federal Register
Vol. 65, No. 77
Thursday, April 20, 2000

# Presidential Documents

**Title 3—**

**The President**

**Proclamation 7291 of April 12, 2000**

## National D.A.R.E. Day, 2000

**By the President of the United States of America**

**A Proclamation**

Children face many challenges in today's complex society. Peer pressure to abuse drugs and alcohol; negative influences in films, music, television, and videos; school violence; gang activities; fear and low self-esteem—any or all of these pressures can lead young people to make unwise choices that can jeopardize their future and even their lives. Since 1983, however, there has been a strong positive influence in the lives of America's children that is helping them to navigate safely through these dangers and uncertainties: Drug Abuse Resistance Education (D.A.R.E.).

D.A.R.E. was developed jointly by the Los Angeles Police Department and the Los Angeles Unified School District and continues to draw its strength from partnerships among law enforcement officials, schools, parents, and communities. Under the program, specially trained police officers conduct classroom lessons designed to teach children from kindergarten through the 12th grade how to make healthy choices, overcome negative influences, avoid destructive behavior, and resist the lure of drugs, alcohol, and tobacco.

The D.A.R.E. curriculum has several components designed to meet the changing needs of students as they mature. From the visitation program for children in kindergarten and the early elementary school years to the core curriculum for highly vulnerable fifth and sixth graders to reinforcement programs for middle school, junior high, and senior high students, D.A.R.E. helps young people of all ages develop the skills and self-confidence to recognize and resist negative influences. And this year, D.A.R.E. has pledged to use a specialized curriculum to reach out to thousands of parents and help them talk to their children about drugs.

My Administration is also taking forceful measures to help our young people make the decision to reject drugs. We are continuing to expand the unprecedented National Youth Anti-Drug Media Campaign in order to change the attitudes of an entire generation of young people; a campaign that is working across all race, gender, grade level, and income lines. The campaign is already paying dividends for American families: studies show that growing numbers of parents are talking to their children about the dangers of drug use, and youth drug use is down 13 percent in just one year. We have also expanded the Safe and Drug-Free Schools program and the Drug-Free Communities program.

Through efforts like these and the commitment of programs like D.A.R.E., we can ensure that America's children have the skills, self-esteem, and guidance they need to reject substance abuse and violence and to create for themselves a bright and healthy future.

NOW, THEREFORE, I, WILLIAM J. CLINTON, President of the United States of America, by virtue of the authority vested in me by the Constitution and laws of the United States, do hereby proclaim April 13, 2000, as National D.A.R.E. Day. I call upon our youth, parents, educators, and all the people of the United States to observe this day with appropriate programs and activities.

IN WITNESS WHEREOF, I have hereunto set my hand this twelfth day of April, in the year of our Lord two thousand, and of the Independence of the United States of America the two hundred and twenty-fourth.

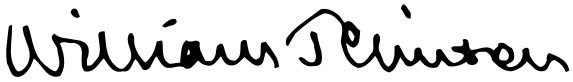

[FR Doc. 00–10002
Filed 4–19–00; 8:45 am]
Billing code 3195–01–P

# Presidential Documents

**Proclamation 7292 of April 14, 2000**

## National Organ and Tissue Donor Awareness Week, 2000

**By the President of the United States of America**

**A Proclamation**

Organ and tissue transplantation offers us the extraordinary opportunity to share with others one of our most precious gifts—the gift of life. By donating tissues and organs, living donors and the families who have lost loved ones are rewarded with the knowledge that they have saved and enhanced many lives. Thanks to donors' generosity and compassion, transplant recipients across our country are able to work, care for their families, and look forward to a brighter future. Thanks to donors' selflessness, many children who were not expected to see their first birthday are playing, learning to walk, and entering school.

The future of the thousands of Americans awaiting transplants, however, depends on the willingness of their fellow citizens to become organ and tissue donors. More than 68,000 patients are on the national organ transplant waiting list; each day, 13 of them will die because the organs they need have not been donated; and every 16 minutes, a new name will be added to that waiting list.

To address this critical and growing need, Vice President Gore and Secretary of Health and Human Services Shalala launched the National Organ and Tissue Donation Initiative in December of 1997. This public-private partnership was designed to raise awareness of the success of organ and tissue transplantation and to educate our citizens about the urgent need for increased donation. Working with partners such as health care organizations, estate planning attorneys, faith communities, educational organizations, the media, minority organizations, and business leaders, the Initiative is reaching out to Americans of all ages, backgrounds, and races, asking them to consider donation. In its first year alone, the Initiative made a measurable impact, as organ donation increased by 5.6 percent.

But donations are still falling short nationwide. As we observe National Organ and Tissue Donor Awareness Week, I urge all Americans to consider becoming donors. Becoming a prospective organ and tissue donor is an easy, two-step process. Potential donors need only indicate their intention on their driver's license or donor card, which is available from a number of organizations by mail or on-line, and notify their families and friends of their wish to donate. I also encourage organ and tissue recipients to tell others how their lives and health have changed because of the generosity of a donor and his or her family; and I join the friends and families of donors in remembering with pride and gratitude all those who gave of themselves so that others might live.

NOW, THEREFORE, I, WILLIAM J. CLINTON, President of the United States of America, by virtue of the authority vested in me by the Constitution and laws of the United States, do hereby proclaim April 16 through April 22, 2000, as National Organ and Tissue Donor Awareness Week. I urge all health care professionals, educators, the media, public and private organizations concerned with organ donation and transplantation, and all Americans to join me in promoting greater awareness and acceptance of this humanitarian action.

IN WITNESS WHEREOF, I have hereunto set my hand this fourteenth day of April, in the year of our Lord two thousand, and of the Independence of the United States of America the two hundred and twenty-fourth.

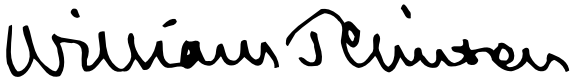

[FR Doc. 00–10003
Filed 4–19–00; 8:45 am]
Billing code 3195–01–P

# Presidential Documents

**Proclamation 7293 of April 14, 2000**

## National Park Week, 2000

**By the President of the United States of America**

**A Proclamation**

We are fortunate to live in an era when the explosive growth of technology has put at our fingertips an extraordinary array of information. But even during this technological revolution, one of America's richest and most fascinating educational resources is also among its oldest: our national park system. Our national parks are living libraries and laboratories, where all Americans can experience the beauty and variety of nature and learn about our Nation's history and culture.

Preserving the rare and unusual as well as the spectacular and beautiful, our national parks provide botanists, wildlife biologists, chemists, and other scientists the opportunity to conduct research into the fragile ecosystems that affect the health of people, plants, and animals around the world. Geologists and paleontologists find in our national parks the story of our continent, from the Grand Canyon's geologic formations to the ancient bones resting at Dinosaur National Monument.

The national park system also captures America's more recent history. In the National Historic Sites and along the National Historic Trails maintained by the men and women of the National Park Service, we learn about the lives and achievements of American heroes like Lewis and Clark, Sojourner Truth, Abraham Lincoln, Frederick Douglass, Elizabeth Cady Stanton, the Wright Brothers, and Thomas Edison. From Fort Necessity in Pennsylvania, where a young George Washington saw action in the French and Indian War, to the quiet acres of Gettysburg, where one of the Civil War's bloodiest battles was fought, to the Edmund Pettus Bridge in Selma, Alabama, where the modern civil rights movement reached its emotional peak 35 years ago, Americans can see and touch their history.

Today, we have 379 national parks, and each site offers a unique opportunity to experience the wonder of nature, to stand in the footprints of history, to learn about our culture and our society, to study the natural world, and to look toward the future. As we observe National Park Week, I join all Americans in thanking the men and women of the National Park Service for their dedication in caring for these special places. We are indebted to them for preserving and protecting our natural and cultural heritage, not only for our enjoyment and education today, but also for the benefit of generations to come.

NOW, THEREFORE, I, WILLIAM J. CLINTON, President of the United States of America, by virtue of the authority vested in me by the Constitution and laws of the United States, do hereby proclaim April 17 through April 23, 2000, as National Park Week.

IN WITNESS WHEREOF, I have hereunto set my hand this fourteenth day of April, in the year of our Lord two thousand, and of the Independence of the United States of America the two hundred and twenty-fourth.

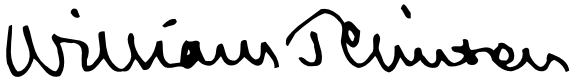

[FR Doc. 00–10004
Filed 4–19–00; 8:45 am]
Billing code 3195–01–P

# Presidential Documents

**Proclamation 7294 of April 14, 2000**

## National Recall Round-Up Day, 2000

**By the President of the United States of America**

**A Proclamation**

Every year, the Consumer Product Safety Commission (CPSC) researches the safety of more than 15,000 types of products used by the American people and secures the recall of defective or potentially dangerous products. Last year alone, the CPSC negotiated almost 300 recalls involving more than 74 million individual consumer products that presented a significant risk to the public. Despite these recalls and additional safety alerts issued by the CPSC, many consumers are still using products that may seriously injure or even kill them or their children, and people are still able to purchase these products at flea markets, secondhand stores, and garage or yard sales.

The CPSC estimates that some 29 million Americans will suffer injuries involving consumer products this year, and 22,000 will lose their lives. To reduce these tragic statistics, the CPSC is working to increase public awareness of recalled products and to ensure that such potentially hazardous products are removed from people's homes. As a vital part of this effort, the CPSC is conducting the fourth annual Recall Round-Up Campaign this year in partnership with the U.S. Postal Service. With the cooperation and active involvement of State and local officials, health and safety organizations, the media, and community groups, this innovative public safety campaign will sponsor activities in communities across the Nation to publicize the products that have been recalled, to encourage Americans to repair, return, or destroy any recalled products that may still be in their homes or businesses, and to urge them to stay alert and informed about such products when purchasing secondhand items.

This year's Recall Round-Up will focus on a number of previously recalled consumer products that pose a threat to children in particular, including certain infant car seats; swimming pool dive sticks that can cause impalement injuries to young children; television carts that can tip over; tubular metal cribs that can entrap children; and old cribs, hair dryers, and children's drawstring jackets that fail to meet the most current safety standards. Last year's campaign succeeded in reaching some 55 million consumers; this year, with the assistance of the U.S. Postal Service, the CPSC hopes to reach millions more—especially parents and child care providers—with these lifesaving messages.

NOW, THEREFORE, I, WILLIAM J. CLINTON, President of the United States of America, by virtue of the authority vested in me by the Constitution and laws of the United States, do hereby proclaim April 18, 2000, as National Recall Round-Up Day. I call upon all Americans to observe this day by working with safety, health, and consumer agencies and other appropriate community organizations to organize and conduct local round-ups of dangerous and defective consumer products and to warn parents, child care providers, and the general public about the hazards of using recalled consumer products.

IN WITNESS WHEREOF, I have hereunto set my hand this fourteenth day of April, in the year of our Lord two thousand, and of the Independence of the United States of America the two hundred and twenty-fourth.

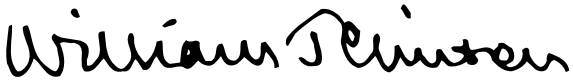

[FR Doc. 00–10005
Filed 4–19–00; 8:45 am]
Billing code 3195–01–P

# Rules and Regulations

Federal Register
Vol. 65, No. 77
Thursday, April 20, 2000

This section of the FEDERAL REGISTER contains regulatory documents having general applicability and legal effect, most of which are keyed to and codified in the Code of Federal Regulations, which is published under 50 titles pursuant to 44 U.S.C. 1510.

The Code of Federal Regulations is sold by the Superintendent of Documents. Prices of new books are listed in the first FEDERAL REGISTER issue of each week.

## OFFICE OF PERSONNEL MANAGEMENT

### 5 CFR Part 841

**RIN 3206–AI83**

### Retirement and Insurance—Automation and Simplification of FERS Employee Record Keeping During an Intra-Agency Transfer

**AGENCY:** Office of Personnel Management.

**ACTION:** Interim rule.

**SUMMARY:** The Office of Personnel Management (OPM) is issuing interim regulations to allow the automated transfer of Federal Employees' Retirement System (FERS) employee payroll account information from one payroll office to another, within the same agency, eliminating the requirement of creating and forwarding a hard copy Individual Retirement Record (IRR) to OPM for each intra-agency transfer. When an employee is no longer employed by the agency or is no longer covered under FERS, a comprehensive IRR will then be forwarded to OPM.

**DATES:** Interim rules effective April 20, 2000; comments must be received on or before July 19, 2000.

**ADDRESSES:** Send comments to Mary Ellen Wilson, Retirement Policy Division, Office of Personnel Management, P.O. Box 57, Washington, DC 20044; or deliver to OPM, Room 4351, 1900 E Street, NW., Washington DC. Comments may also be submitted by electronic mail to *combox@opm.gov.*

**FOR FURTHER INFORMATION CONTACT:** For Part 841: John Panagakos, (202) 606–0299.

**SUPPLEMENTARY INFORMATION:** 5 CFR 841.504(d) directs an agency payroll office to close a FERS employee's IRR and forward it to OPM when the employee separates, transfers to another agency or to a position serviced by another payroll office, or transfers to a position in which he or she is not covered by FERS. This means that even when an employee transfers within an agency, but is subject to a different payroll office, a hard copy IRR must be created from the payroll information and forwarded to OPM. There are compelling reasons to retain the requirement to create a hard copy IRR each time an employee (1) moves from one agency to another; (2) separates from Federal service; or (3) changes retirement coverage. However, recent automated advances obviate the need to immediately create and forward an IRR to OPM for every intra-agency transfer that only involves different payroll offices under the same system of automated records.

As a result of modernization efforts in automated record keeping software, early in the year 2000 the Defense Finance and Accounting Service (DFAS) plans to implement the automated transfer of large numbers of payroll accounts from one payroll office to another within their agency. This software also has the capability to electronically transfer retirement information as well as payroll information, thus securing an accurate record of retirement information for hard copy certification and transmittal to OPM when the employee falls into one of the three retained categories listed above (e.g., separates from Federal service).

For these reasons, the Office of Personnel Management is proposing to amend 5 CFR 841.504(d) to allow agencies this flexibility in intra-agency record keeping. OPM's authority to make this amendment is in section 8461(g) of title 5, United States Code.

### Waiver of General Notice of Proposed Rulemaking

Under section 553(b)(3)(B) and (d)(3) of title 5, United States Code, I find that good cause exists for waiving the general notice of proposed rulemaking and for making these rules effective in less than 30 days. These regulations will affect the operation of all Federal payroll offices on and after May 1, 2000. Publication of a general notice of proposed rulemaking would be contrary to the public interest because it would delay the implementation of cost saving automated record keeping measures that are non-controversial in nature.

### Regulatory Flexibility Act

I certify that this amendment to the regulation will not have a significant economic impact on a substantial number of small entities because the amendment provides a cost-saving option previously unavailable to those agencies but does not require that they obtain the necessary software to implement that option.

### Executive Order 12866, Regulatory Review

This rule has been reviewed by the Office of Management and Budget in accordance with Executive Order 12866.

### List of Subjects in 5 CFR Part 841

Administrative practice and procedure, Air traffic controllers, Claims, Disability benefits, Firefighters, Government employees, Income taxes, Intergovernmental relations, Law enforcement officers, Pensions.

Office of Personnel Management

**Janice R. Lachance,**

*Director.*

Accordingly, OPM amends part 841 of title 5 of the Code of Federal Regulations as follows:

## PART 841—FEDERAL EMPLOYEES RETIREMENT SYSTEM—GENERAL ADMINISTRATION

1. The authority citation for part 841 is revised to read as follows:

**Authority:** 5 U.S.C. 8461; § 841.108 also issued under 5 U.S.C. 552a; subpart D also issued under 5 U.S.C. 8423; § 841.504 also issued under 5 U.S.C. 8422; § 841.507 also issued under section 505 of Pub. L. 99–335, 100 Stat. 514; subpart J also issued under 5 U.S.C. 8469; § 841.506 also issued under 5 U.S.C. 7701(b)(2); § 841.508 also issued under section 505 of Pub. L. 99–335, 100 Stat. 514.

## Subpart E—Employee Deductions and Government Contributions

2. In § 841.504 paragraph (d) is revised to read as follows:

**§ 841.504 Agency responsibilities.**

* * * * *

(d) When an employee separates from Federal service or transfers to another agency, or transfers to a position in which he or she is not covered by FERS, the agency must close the employee's

Individual Retirement Record (IRR) and forward it to OPM within the time standards prescribed by OPM. However, if an employee transfers to another position covered under FERS—

(1) Within the same agency, and

(2) To a position serviced by another payroll office, the agency may, in lieu of forwarding an IRR to OPM at the time of the intra-agency transfer, record the transfer for future IRR certification in an internal automated system of records.

* * * * *

[FR Doc. 00–9853 Filed 4–19–00; 8:45 am]

BILLING CODE 6325–01–P

## DEPARTMENT OF AGRICULTURE

### Animal and Plant Health Inspection Service

### 7 CFR Part 319

**[Docket No. 96–031–2]**

**RIN 0579–AA82**

## Importation of Wood Chips From Chile

**AGENCY:** Animal and Plant Health Inspection Service, USDA.

**ACTION:** Final rule.

**SUMMARY:** We are adopting as a final rule, with changes, a proposed rule to allow the importation of *Pinus radiata* wood chips from Chile if the surfaces of the wood chips are treated with a specified pesticide mixture. This change to the regulations for importing logs, lumber, and other unmanufactured wood articles will provide another alternative for persons interested in importing wood chips from Chile while continuing to protect against the introduction of dangerous plant pests.

**EFFECTIVE DATE:** May 22, 2000.

**FOR FURTHER INFORMATION CONTACT:** Donna L. West, Import Specialist, Phytosanitary Issues Management Team, PPQ, APHIS, 4700 River Road Unit 140, Riverdale, MD 20737–1236; (301) 734–6799.

**SUPPLEMENTARY INFORMATION:**

### Background

Logs, lumber, and other unmanufactured wood articles imported into the United States could pose a significant hazard of introducing plant pests and pathogens detrimental to agriculture and to natural, cultivated, and urban forest resources. The regulations in 7 CFR 319.40–1 through 319.40–11 (referred to below as the regulations) contain provisions to eliminate any significant plant pest risk presented by the importation of logs, lumber, and other unmanufactured wood articles.

On July 28, 1998, the Animal and Plant Health Inspection Service (APHIS) published in the **Federal Register** (63 FR 40193–40200, Docket No. 96–031–1) a proposed rule to amend the regulations to allow the importation of *Pinus radiata* wood chips from Chile if the surfaces of the wood chips are treated with a specified pesticide mixture.

We solicited comments concerning our proposed rule for 60 days ending September 28, 1998. We received 10 comments by that date. The comments were from four environmental groups (with overlapping management), three State governments, two corporations, and the Government of Chile. Seven of the commenters supported the proposed rule, although several stated that there were deficiencies in the rule that should be corrected before the rule could win their full support. The remaining commenters disagreed with the proposed rule or suggested alternatives to it. All of the issues raised by the commenters are discussed below.

*Comment—Control of Stain Fungi:* Several commenters questioned whether the surface pesticide treatment or other requirements of the rule would prevent the introduction of stain fungi, particularly of the genus *Ophiostoma,* that may be associated with wood chips from Chile.

*Response:* The surface pesticide treatment contained in the rule has been proven effective against stain fungi, including stain fungi of the genus *Ophiostoma.* Research demonstrating this effectiveness has been published (see, for example, Morrell, Freitag, and Silva, ''Protection of Freshly Cut Radiata Pine Chips From Fungal Attack,'' Forest Prod. J. 48(2):57–59).

*Comment—Heat Treatment Should Be Required:* Several commenters stated that the position of most experts, State regulators, and members of the public is that heat treatment of imported wood articles capable of bearing pests is the only safe and acceptable method of importation. They stated that fumigation or surface pesticide treatment are not economically feasible or effective alternatives.

*Response:* ''Safe'' and ''acceptable'' are terms whose meanings vary greatly depending on individual values. We are assuming that the comments refer to safety and acceptability in terms of the effectiveness of systems in preventing the introduction and dissemination in the United States of dangerous plant pests. No commenter submitted data proving that a heat treatment system is ''safer'' than the proposed surface pesticide treatment system. The new surface pesticide treatment would reduce the risk associated with any plant pest introduction to a negligible level.

Regarding the practicality of heat treating wood chips, heat treated wood chips are less useful than wood chips that have undergone less destructive treatments. Heat treatment decreases the quality of wood chips and renders them useless for many specific manufacturing purposes. Regarding the economic feasibility of the proposed surface pesticide treatment and fumigation, wood product companies have requested that they be able to utilize the surface pesticide alternative and, therefore, presumably find it economically feasible. Under normal business practices, it is not economically feasible for methyl bromide to effectively penetrate wood chips to more than 120 cubic feet. When penetration is inadequate, the requirements of the regulations are not met, and the wood chips cannot be imported under the fumigation treatment option. In theory, it is possible to effectively penetrate large piles of wood chips by using a specialized technique to distribute the fumigant (*e.g.,* a vacuum chamber or submerged gas tubes); however, the cost of utilizing such a technique is so exorbitant that it becomes economically infeasible. Consequently, no one has imported large shipments of wood chips, fumigated as a whole, under the fumigation treatment option. Fumigation remains in the regulations as a treatment option for wood chips because it is used for small shipments. One reason for developing the surface pesticide treatment in the proposal was to compensate for the unavailability of fumigation as a treatment method for large shipments of wood chips.

*Comment—Pesticide Application Protocol and Quality Control:* One commenter cited research by Dr. Jeffrey J. Morell of Oregon State University that was used to support the treatment in the proposed rule. The commenter noted that the only pathogens tracked for efficacy in the research were *Trichoderma* species and that there was no efficacy evaluation for insects. The commenter stated that Morell concluded the following modifications of the surface pesticide treatment system may be needed: An increase in biocide concentration; improved uniformity of the spray system; routine assessment of chip treatment quality; and a system for regular microbiological assessment of organisms present in imported wood chips.

*Response: Trichoderma* species were not the only pathogens tracked in the research. Treated and untreated wood chips were placed in plastic bags and incubated for 16 weeks. The bag interiors were sprayed with suspensions of spores and hyphal fragments of *Alternaria alternata, Ophiostoma piceae, Phialophora* spp., and *Aspergillus niger.* The wood chips were then regularly visually assessed for growth of the inoculum or other species. Various *Trichoderma* species caused the highest degree of wood chip discoloration in the tests, but they were not the sole organisms tracked.

The research cited did not evaluate efficacy against insects because it was not practical to do so in an experimental protocol addressing fungicidal efficacy. The report did note that while insect infestation of wood is always a risk, it is sharply reduced in wood chip shipments due to the fragmented nature of the wood and the near absence of bark. The report also noted that the presence of low levels of an insecticide such as chlorpyrifos should provide added insurance against incidental oviposition. The proposed treatment included, along with fungicides, an insecticide containing 44.9 percent of the active ingredient chlorpyrifos phosphorothioate. This, along with the regulatory requirement that the wood chips be produced from debarked, plantation-grown trees, should reduce the risk of introduction of dangerous insects with wood chips imported under the regulations to a negligible level.

The highest concentration of the proposed fungicide tested in the research was a 400:1 dilution. The research found that while this dilution achieved acceptable results in preventing fungal growth for 4 weeks after treatment, the growth levels increased during the period from 4 weeks to 16 weeks after treatment. The research suggested that for long-term protection, dilution levels around 200:1 would be more appropriate. When diluted in accordance with the label instructions, as proposed, the treatment solution would in fact be stronger than a 200:1 dilution. Since this standard exceeds that recommended by the researcher, we are making no change based on this comment.

Regarding the comment that the researcher recommended improvement to the uniformity of the spray system, the researcher specifically recommended improvement of the current spray system to increase the uniformity of treatment to at least 70 to 80 percent average coverage of the wood chips. The proposed rule actually required that the wood chips be sprayed so that all the chips are exposed to the chemical on all sides. This standard exceeds that recommended by the researcher; therefore, we are making no change based on this comment. We do not believe it is necessary to specify detailed engineering standards for how chip producers must achieve this degree of coverage (placement and number of spray nozzles, conveyer belt speed and configuration, etc.) because this would limit the producers' options for developing their own cost-effective solutions to the problem.

As noted by the commenter, the researcher also recommended establishment of two quality control and monitoring systems to check whether chips are being properly treated and to check whether dangerous fungi are present on wood chips imported under this system. Specifically, the researcher recommended routine assessment of chip treatment quality through dye tests and image analysis of chip samples and regular microbiological assessment of organisms present on wood chip shipments entering the United States. These activities fall under the category of monitoring and enforcement activities that APHIS may employ to ensure that regulated parties are complying with the regulations. Since these are internal agency activities that do not impose any requirement for action by an outside party, it is not necessary to include standards for these activities in the regulations. However, APHIS will monitor treatments to ensure that wood chips imported under the regulations have been properly treated and do not present a risk of introducing dangerous plant pests.

*Comment—Time Periods Allowed Between Harvesting of Trees and Treatment of Wood Chips; Time Period Allowed Between Arrival in United States and Processing of Wood Chips:* One commenter objected that the proposal would allow wood chips that were treated immediately after a tree was felled and chipped to sit for 45 days before export from Chile to the United States, and that the research on the treatment showed its efficacy declined after 4 weeks. Two commenters objected to allowing storage of wood chips from Chile for up to 60 days after arrival at a facility operating under a compliance agreement and prior to processing. They noted that even the 30-day limit in the current regulations allows too much time for potential pests to escape from stored wood chips.

*Response:* We are making two changes in response to these comments. The rule still will require that no more than 45 days may elapse between the time the trees used to make the wood chips were felled and the time the wood chips are exported; however, the wood chips must be treated with the surface pesticide treatment within 24 hours after the log is chipped, and they must be retreated with the surface pesticide treatment if more than 30 days elapses between the date of the first treatment and the date of export. We are also changing the requirement for when wood chips imported from Chile under the regulations must be processed by reducing the time from 60 days after arrival at the processing facility to 45 days. We believe this is a safe time frame, given the requirements of the regulations for safeguards during movement and storage of the wood chips in the United States.

*Comment—Adequacy of Environmental Assessment:* Several commenters questioned whether the environmental assessment adequately dealt with human health and ecological risks that may be posed by pesticide residues on wood chips imported under the regulations. Specific concerns were raised about ammonium chloride, carbamate, and chloropyrifos residues, including carcinogenic effects and these substances' propensity for leaching into groundwater.

*Response:* The environmental assessment (EA) was revised in May 1999, and a finding of no significant impact (FONSI) has been signed. The revised EA provides information on the toxicity of the pesticides and the protective measures that reduce the potential for human and nontarget wildlife exposure to those pesticides. Copies of the EA and FONSI are available from the person identified under **FOR FURTHER INFORMATION CONTACT**, and will also be available at the following Internet address until at least March 1, 2000: http://www.aphis.usda.gov/ppd/eachips.pdf.

The main pesticides planned for treating wood chips are a fungicide with the active ingredients 64.8 percent didecyl dimethyl ammonium chloride (DDAC) and 7.6 percent 3-iodo-2-propynyl butylcarbamate (IPBC) and an insecticide with the active ingredient 44.9 percent chlorpyrifos phosphorothioate. The U.S. Environmental Protection Agency (EPA) approved these pesticides for specific uses on wood articles. The current label instructions call for these pesticides, when used as a spray treatment, to be diluted before use in the ratios of one gallon fungicide to 25–50 gallons of water for the fungicide, and one gallon of the insecticide to 50 gallons of water. When mixed together, the amounts of fungicide, insecticide, and water must be calculated so that each of the

fungicide and insecticide achieve a dilution within the range specified on its respective label. When diluted to a 1:50 ratio, the fungicide-insecticide mixture contains no more than 1.3 percent DDAC, 0.15 percent IPBC, and 0.9 percent chlorpyrifos phosphorothioate. The label for each pesticide carries exact information with detailed directions, including any restrictions for use or special precautions, and specifies any special equipment that must be used when applying these chemicals. The label also gives special disposal instructions for pesticide waste and containers. All pesticides used to treat wood chips for export from Chile to the United States are required to be applied according to the EPA-approved pesticide label.

The pesticides do leave residues, which would maintain the pest-free status of the wood chips while they are in transit to the United States. Although the degradation of IPBC and its primary degradation products is rapid (half lives of less than a week) (Troy Corporation, 1999), the caustic nature of the ammonium chloride on the wood chips prevents any potential for fungal reinfestation. The ammonium chloride in the pesticide is relatively volatile, and residues would mostly dissipate before arrival in the United States. The chlorpyrifos residues are more persistent and would continue to eliminate insect pest risks during transit.

The physical and toxicological properties of the pesticides determine the potential for nontarget hazards. The caustic nature of ammonium chloride can be highly irritating to eyes, skin, and the respiratory system. Unlike most carbamates, IPBC has not been shown to inhibit plasma and red blood cell acetylcholinesterase *in vitro* at concentrations as high as $1\times10^{-4}$ molar (Troy Corporation, 1999). As a result, the acute toxicity of IPBC is low by all routes of exposure. However, IPBC can be an eye and skin irritant. Chronic dietary studies of IPBC have not found any evidence of carcinogenicity in either rats or mice (Troy Corporation, 1999) and have found adverse effects only at high exposures (40 milligram IPBC per kilogram body weight per day or greater). IPBC is of slight acute toxicity to birds but is highly to very highly toxic to fish and other aquatic organisms. Chlorpyrifos phosphorothioate is an organophosphate insecticide that is moderately toxic to mammals (Smith, 1987). The toxicity occurs primarily through inhibition of acetylcholinesterase activity (Klaassen *et al.,* 1986). The studies of chlorpyrifos phosphorothioate have not found any evidence of carcinogenic effects. Chlorpyrifos phosphorothioate is moderately to severely toxic to birds and very highly toxic to fish and other aquatic invertebrates (Smith, 1987; Mayer and Ellersieck, 1986).

The potential for human exposure to pesticides used in treatment of the wood chips is minimized by adherence to label requirements for proper application and to provisions in the rule regarding handling of the wood chips. The required adherence to the pesticide label prevents excessive exposure to applicators. The EPA has determined that the potential for adverse effects on human health is minimal when pesticides are applied according to label instructions. The rapid degradation of the pesticides results in steadily decreasing residues during transit. A covered conveyor belt moves the wood chips during unloading to expedite the process and minimize potential human exposure. Workers associated with the unloading activity are required to wear protective clothing and safety glasses. The covered conveyor belt is designed to prevent wood chips from spilling, falling, or being blown from the means of conveyance.

Although the wood chips may still have some residual pesticide residues before processing, the heat treatment and bleaching associated with the pulp and paper process would eliminate any remaining residues. Therefore, the potential for exposure to pesticide residues is limited to the personnel involved in treating the wood chips in Chile and to the personnel involved in moving the treated wood chips. The required safety precautions, protective clothing, and safety glasses preclude unacceptable pesticide exposures.

Exposure of nontarget species to residues from treated wood chips is minimal. The treatment and transport procedures preclude the presence of nontarget wildlife. Although wood chips that have been unloaded may be stored on a paved surface for up to 45 days, the remaining residues would be low. Birds and other terrestrial nontarget wildlife are unlikely to bother the wood chips with the frequent human activity on the property. The remaining residues (primarily chlorpyrifos) strongly adsorb to the organic matter in the wood chips, and this adsorption minimizes movement of residues in runoff following precipitation. In addition, water runoff is collected from the paved pads where the wood chips would be stored and is treated to prevent any environmental contamination of surrounding water bodies. This prevents any potential exposure to aquatic organisms.

*Comment—Fumigated Wood Chips From Brazil Allowed Importation Into Louisiana.* One commenter stated that wood chips from Brazil are currently being imported through Mobile, AL, into Louisiana subject only to fumigation in the ship's hold. The commenter asked whether such importation is safe without the surface pesticide treatment in the proposed rule and, if so, why the surface pesticide treatment, instead of fumigation, would be needed for wood chips from Chile.

*Response:* Based on the permit issued for this importation and records obtained from the State Plant Health Director in Louisiana, we have determined that two shipments of Caribbean pine chips from Brazil were imported into Mobile, AL, in 1997, and were then trucked to a paper mill in Bogaloosa, LA, where the chips were processed. The wood chips were derived from live, healthy, tropical species of plantation-grown trees grown in tropical areas, and, therefore, were not required by APHIS to be fumigated, in accordance with § 319.40–6(c)(1)(i) of the regulations. The shipments also met all of the other requirements of § 319.40–6(c) (*e.g.,* no other regulated articles in the holds; movement to the paper mill under a compliance agreement designed to prevent spread of plant pests during and after movement to the mill; processed within 30 days after arrival at the mill). The wood chips moved in sealed trucks from the port of entry to the destination paper mill where they were processed into manufactured goods. This importation was therefore in compliance with the regulations. As discussed in the proposed rule, the surface pesticide treatment was proposed as another alternative for importing wood chips from Chile, not a replacement for the current requirements contained in § 319.40–6(c) for importing wood chips from all sources. Therefore, this importation does not affect the basis for the proposed rule for importing wood chips from Chile subject to a surface pesticide spray and other requirements.

Therefore, for the reasons given in the proposed rule and in this document, we are adopting the proposed rule as a final rule with the changes discussed in this document.

**Executive Order 12866**

This rule has been reviewed under Executive Order 12866. The rule has been determined to be significant for the purposes of Executive Order 12866 and, therefore, has been reviewed by the Office of Management and Budget.

Set forth below are the economic analysis and cost-benefit analysis prepared for this rule in accordance with Executive Order 12866, as well as the final regulatory flexibility analysis regarding the economic effects of this rule on small entities, prepared in accordance with 5 U.S.C. 604.

**Discussion**

Under the Federal Plant Pest Act (7 U.S.C. 150aa–150jj), the Secretary of Agriculture is authorized to promulgate regulations requiring inspection of products and articles as a condition of their movement into or through the United States and imposing other conditions upon such movement, in order to prevent the dissemination of plant pests into the United States.

This rule amends the regulations for importing wood chips to allow the importation of *Pinus radiata* wood chips from Chile if the surfaces of the wood chips are treated with a pesticide approved by the Administrator for use on wood chips from Chile. Allowing the use of a surface pesticide treatment will make it possible to effectively treat large shipments of wood chips. Wood chips are used for making pulp used in the production of paper. U.S. pulp producers want to import *Pinus radiata* wood chips from Chile because these wood chips produce a high quality pulp. However, there is no treatment in the regulations that is both practical and effective in treating large shipments of these wood chips.

APHIS regulations in place until now have called for, along with other requirements, heat treatment or fumigation of imported wood materials. While these safeguards are appropriate for most wood materials, they are less useful for wood chips. Heating of wood chips is time consuming and decreases the quality of the chips. Fumigation of large shipments of wood chips is not economically practicable. Therefore, importation of *Pinus radiata* wood chips from Chile will be allowed following their surface treatment with a specified pesticide mixture. As discussed below, the efficacy of this treatment is demonstrated by 16 trial shipments of surface-treated *Pinus radiata* wood chips from Chile that have arrived without pests since February 1995.

Approximately $40 million worth of wood chips is imported into the United States each year for use in making pulp for paper production. Coniferous wood chip imports by the United States comprise less than one percent of domestic production.[1] About 30 percent of U.S. wood chip production takes place in the Pacific Northwest.[2] Wood chip imports to the United States have been mainly to the Pacific Northwest, although there have been recent shipments of Caribbean pine from Brazil that have entered through the port at Mobile, AL.

Wood chips are used mainly in the manufacture of pulp that is then used to make paper and panel products.[3] Test shipments of *Pinus radiata* wood chips from Chile during the last 3 years have been so utilized, and it is expected that future shipments facilitated by the surface pesticide treatment in this rule will also be used to make pulp.[4]

The demand for wood chips used by pulp mills is a derived demand, depending on the market for pulp.[5] While the long-term demand for pulp in the United States and internationally is expected to continue to expand (with increasing reliance on wood from plantation forests), pulp and wood chip prices can be volatile in the short term, causing relatively abrupt market changes. The variable demand for wood chips during the few years the Chilean test shipments have taken place illustrates how rapidly market conditions can change. Coniferous wood chip imports in 1995 by the United States nearly tripled those of 1994, with imports from Canada rising more than threefold, and test shipments from Chile doubling and displacing 1994 imports from Mexico.[6] The increase in demand was reflected in a 60 percent increase in the price paid in the United States for Chilean wood chips, from $42 per ton in 1994, to $67 per ton in 1995.[7] Comparable U.S. prices for domestically produced wood chips in these 2 years were $56 per ton in 1994 and $72 per ton in 1995.[8] Since then, prices have receded due to the current abundant supply of wood chips.

Chile's coniferous wood chip exports to the United States, 1994–1996, and Chile's share of coniferous wood chip imports by the United States are as follows:[9]

| | Metric tons | Percent of imports |
|---|---|---|
| 1994 ..... | 168 | 00.05 |
| 1995 ..... | 339,665 | 48.29 |
| 1996 ..... | 329,387 | 44.06 |

In 1994, 57 percent of coniferous wood chip imports by the United States were from Mexico and 43 percent were from Canada. In 1995, pulp prices reached record levels, with U.S. coniferous wood chip imports more than doubling from the year before, to 703,000 metric tons from 331,000 metric tons. That year, no coniferous wood chips were imported from Mexico, 48 percent of imports came from Chile, 49 percent came from Canada, and 3 percent came from Brazil. In 1996, Canada's share of U.S. coniferous wood chip imports increased to 56 percent, 44 percent came from Chile, and none was received from Brazil.

Production of *Pinus radiata* wood chips in the United States is essentially nil, due to the relatively small region in which it grows well, about 6 miles inland along the coastal fog belt of central California (hence its common name, the Monterey pine). There may be some production from sawmill residues, but the quantity, if any, is negligible. No pulp mills are currently using domestically produced *Pinus radiata* wood chips.[10]

Economic effects on the U.S. wood chip industry of potential Chilean imports, therefore, depend on the substitutability of *Pinus radiata* wood chips for other softwood or for hardwood chips. Instances in which *Pinus radiata* and hardwood chips

[1] Robert Flynn, private wood industry consultant, personal communication, drawing in part on information from "Southern Pulpwood Production, 1996," by Tony Johnson, USDA Forest Service, Southern Research Station, Resource Bulletin SRS–21.

[2] Richard Haynes, USDA Forest Service, personal communication.

[3] Chris Twarok, Department of Commerce, personal communication. Landscaping is a secondary use.

[4] J.S. Morrell, Department of Forest Products, Oregon State University, personal communication.

[5] The pulp fiber industry has traditionally been a softwood chip market, but this has been changing in recent years in the eastern United States. Pulp mills in the southeastern United States are relying increasingly on hardwood chips, where only softwood chips were once used. Long-term rising demand for wood chips is also reflected in an increasing number of "chipping" mills producing only wood chips; at least 100 of more than 140 wood chip mills in the southeastern United States have been constructed within the past decade. (Dennis Haldeman and Doug Sloane, personal communications).

[6] U.S. wood chip import and export statistics from Department of Commerce, Bureau of the Census.

[7] FAS Global Agricultural Trade System, using data from the United Nations Statistical Office.

[8] Richard Haynes, USDA Forest Service, personal communication. Domestic prices based on export prices for the Columbia-Snake Customs District, adjusted to "green" metric tons. Without consideration of transportation costs, these quoted prices may overestimate the price realized at a Pacific Northwest pulp mill for U.S. chips and underestimate the price realized for Chilean chips. Moreover, average yearly prices conceal seasonal variations.

[9] GAS Global Agricultural Trade System, using data from the United Nations Statistical Office.

[10] Robert Rummel, American Pulpwood Association, Robert Flynn, Robert Flynn and Associates, personal communications.

might substitute for each other are relatively few. However, *Pinus radiata* wood chips can generally be used in place of other coniferous chips such as lodgepole pine and ponderosa pine, although milling adjustments may be required—and costs incurred—due to differences in resin content.[11]

The test shipments of Chilean wood chips were received by pulp mills in the Pacific Northwest. This region is expected to continue to be the destination of future shipments, given the additional transportation costs that would be incurred by pulp mills in the eastern and southeastern United States. With sales regionally concentrated, little economic effect from this rule is expected outside the Pacific Northwest.

In sum, the test shipments from Chile have shown the value to Pacific Northwest pulp mills of Chilean wood chips in supplementing domestic and Canadian wood chip supplies when the price of pulp makes such shipments economically feasible. Pulp mills able to adjust milling processes to utilize *Pinus radiata* wood chips can benefit by making profitable use of Chilean imports when other sources are insufficient or more costly. As now described, Chile has the production capacity to be a reliable source of *Pinus radiata* wood chips to the United States.

Chile's wood chip industry grew significantly during the 1980s, with production increasing more than tenfold, from 0.44 million tons in 1984, to 5.03 million tons in 1990.[12] Chile's wood chip exports during this period rose from none in 1984, to 2.23 million tons (44 percent of production) in 1990. During the first half of the 1990s, both production and export levels fluctuated, but without the dramatic increases of the 1980s. Annual production between 1990 and 1995 averaged about 5.80 million tons, and exports averaged about 3.05 million tons (about 53 percent of production).

*Pinus radiata* wood chips comprise a minor share of Chile's wood chip exports.[13] Of the approximately 3 million tons of wood chips exported annually between 1990 and 1996, *Pinus radiata's* share averaged 12 percent. Between January and August, 1997, 10 percent of Chile's wood chip exports were *Pinus radiata.*

Japan was, by far, the principal importer of Chilean wood chips from 1990 to 1996. (Country destinations by species are not known for these years.) From 1990 to 1994, an average of 96 percent of Chile's wood chip exports were received by Japan. With the test shipments of *Pinus radiata* to the United States in 1995 and 1996, Japan's share of Chile's wood chip exports fell to 87 percent and 83 percent, respectively; and the U.S. share for these 2 years was 9 percent and 11 percent.

From January to August, 1997, Japan's share of Chile's wood chip exports was 89 percent. The United States and Japan each received about one-half of Chile's *Pinus radiata* wood chip exports during this 8-month period.

Chile's development of its forest products sector rests to a large degree on the success of *Pinus radiata;* its share of Chile's wood chip exports is expected to increase. By 1996 there were approximately 1,387,000 hectares planted in *Pinus radiata,* representing 75 percent of plantation plantings and 15 percent of Chile's forest resources including native forest.[14] This pine species matures at 20 to 24 years in Chile (thinnings are available for use after 15 years), compared to 30 years in New Zealand and Australia, and 40 to 60 years in North America and Europe. Production and exports are expected to peak during the coming decade, when trees on most of the *Pinus radiata* plantations will be ready to be harvested.

One set of projections describing the volume of *Pinus radiata* wood chips that could be exported to the United States over the coming 4 years, assuming favorable prices, is as follows:[15]

POTENTIAL *Pinus radiata* WOOD CHIP EXPORTS

[in million tons]

| Year | From Chile to the United States |
|---|---|
| 1999 .... | 0.60 to 1.00. |
| 2000 .... | 1.00 to 1.20. |
| 2001 .... | 0.90 to 1.00. |
| 2002 .... | 0.85 to 0.90. |

Realization of these export levels will depend on the demand for *Pinus radiata* wood chips by U.S. pulp mills. As has been described, international short-term demand for pulp fibers can be volatile. When prices fell between 1995 and 1996, Chile's forestry sector exports declined by 24 percent, mainly because of reduced sales to Japan.

Chile's stock of *Pinus radiata* available for harvest will enable Pacific Northwest importers to take advantage of a ready source as wood chip prices rebound. In 1996, all coniferous wood chip imports by the United States totaled about 0.75 million tons, of which 0.33 million tons were imported from Chile.[16] Projected export levels shown above would increase U.S. wood chip imports above current levels and establish Chile as a major foreign supplier. Wood chip prices in the United States will determine whether these projections are overly optimistic.

**Summary**

Benefits from allowing *Pinus radiata* wood chips to be imported from Chile include lower priced wood chips for pulp mills in the Pacific Northwest and lower priced products to consumers if lower input prices are reflected in lower retail prices. Greater choice among species for wood chip raw material is another benefit. Costs associated with risks of introducing pests are negligible because the procedures required to import Chilean wood chips under this rule are designed to keep the risk of importing pests to a negligible level. Since imports will be concentrated in the Pacific Northwest, economic effects will be felt mainly by wood chip producers and purchasers in the region. Wood chip producers may bear revenue losses if they are unable to compete with lower cost imports or adjust their product mix.

Test shipments of *Pinus radiata* wood chips from Chile to the Pacific Northwest during recent years have demonstrated the effectiveness of phytosanitary safeguards in this rule, as well as the economic feasibility of chip imports from Chile for the region's pulp mills. Chile's large and expanding forestry plantations are expected to provide a reliable source for future wood chip imports when there is sufficient demand. At present, the abundant supply of wood chips in the Pacific Northwest precludes imports, a market situation that differs dramatically from that of 4 years ago when wood chip prices reached an all-time high. Pacific Northwest pulp mills depend primarily on domestic wood

[11] Chris Twarok, Department of Commerce, personal communication.

[12] Information on Chile's wood chip production and exports taken from Wood Products: International Trade and Foreign Markets, FAS Circular Series WP 3–97, August 1997, Table 15.

[13] Information on Chile's *Pinus radiata* wood chip exports from APHIS, IS.

[14] ''Forest Products, Annual Report,'' Office of Agricultural Affairs, American Embassy, Santiago, AGR Number CI7033, 1997.

[15] Fernando Hartwig, Inversiones Forestales C.C.A., personal communication.

[16] The United States is a net exporter of coniferous and nonconiferous wood chips. Compared to coniferous wood chip imports of 0.75 million tons in 1996, the United States exporter 1.78 million tons. Nonconiferous wood chip imports and exports by the United States exhibit an even larger difference, with 1996 imports totaling about 55,000 tons and exports at 4.29 million tons. (Department of Commerce, Bureau of the Census).

chip suppliers but turn to overseas sources when domestic wood chip prices are high. Chilean imports can be expected to be competitively marketed when the domestic wood chip supply is low, since *Pinus radiata* wood chips can substitute for most other softwood chips. Some domestic wood chip producers may be adversely affected by Chilean imports, but the effect is not likely to be widespread; most domestic wood chip producers who cannot compete may adjust their product mix away from wood chips to other mill products.

**Regulatory Flexibility Act**

In accordance with 5 U.S.C. 603, we performed an initial regulatory flexibility analysis, which was included in the proposed rule and which invited submission of comments and data to assist in a comprehensive analysis of the effects of this rule on small entities. We received one comment addressing the initial regulatory flexibility analysis. This comment stressed that the economics of domestic industries that might import wood chips are dynamic and change almost monthly; and, therefore, any prediction of import volume would be solely a guess. The comment also stated that if Chilean wood chips cost more than domestic supplies, they will be sought only if domestic supplies diminish below the amount required, and that at that point the owners of pulp mills (the major user of wood chips) will make a financial decision whether to pay higher prices for imported supplies or close mills. The comment also suggested that only a few wood chip consuming businesses located near seaports will be likely to import wood chips from Chile, but that some of these businesses do require the option of importing Chilean wood chips to stay in business.

We largely agree that these points correctly describe the current economic situation regarding importation of Chilean wood chips, and have taken the comment into account in the final regulatory flexibility analysis set out below. However, we note that if for any reason there is a significant decrease in domestic wood chip production, or a significant increase in their price, many more wood chip consumers, regardless of whether they are located near seaports, may decide to import wood chips from Chile.

The Regulatory Flexibility Act requires consideration of the potential economic effects of rules on small businesses, organizations, and governmental jurisdictions. In this instance, small entities directly affected will be U.S. wood chip producers and pulp mills in the Pacific Northwest.

Wood chip production is included in the SIC category for firms operating sawmills and planing mills. In most cases, wood chips are a byproduct of lumber production. A mill will vary its level of wood chip production (compared to other products) based on whether wood chip prices are high or low at a particular point in time. In the Pacific Northwest, about 150 mills produce wood chips (90 in Oregon and 60 in Washington), but more than one may be owned by the same firm.[17] Data on the exact number of firms is not available. Sawmills and planing mills that employ 500 people or fewer are designated by the Small Business Administration as ''small.'' In 1994, there were 5,241 firms operating sawmills and planing mills in the United States, of which 5,149 (more than 98 percent) were small.[18] Estimated annual receipts of these 5,149 ''small'' firms totaled about $14.88 billion, which was 62 percent of total annual receipts of about $23.93 billion earned by all sawmills and planing mills. In the absence of information on mill firm sizes specific to Oregon and Washington, it is assumed that most sawmills in the Pacific Northwest are also small entities.

Adverse economic effects on most ''small'' U.S. wood chip producers due to this rule will be minor. The Chilean imports are expected to be sold in the Pacific Northwest, thereby affecting a geographical subset of all wood chip producers. Adverse economic effects on Pacific Northwest wood chip producers will depend on the ability of such producers to find lower priced raw materials to produce wood chips or otherwise reduce cost, and the extent of their reliance on wood chips for their net revenues. Producers of those wood chips that are substitutes for *Pinus radiata* chips will find their net returns reduced when import prices are low. As raw materials used for wood chip production grow increasingly scarce and expensive in the Pacific Northwest, those wood chip producers that compete with lower priced imports will face adjustment pressures. However, U.S. wood chip producers already feel competition from other international sources.

It is estimated that less than 5 percent of wood chip producers in the Pacific Northwest are ''chipping'' mills devoted solely to wood chip production.[19] However, during periods of high wood chip demand, such as 4 years ago, many sawmills may be converted largely to wood chip production.

Turning to the pulp mills, themselves, there were 37 firms operating pulp mills in the United States in 1994. Often more than one pulp mill is owned by a single firm. Pulp mill firms employing 750 people or fewer are designated by the Small Business Administration as ''small.'' In 1994, between 20 and 25 of the 37 firms were small, that is, between 54 and 68 percent of the total number of firms. Estimated annual receipts of these 20 to 25 ''small'' firms totaled between about $383 million and about $1.12 billion, which represented between 7 percent and 21 percent of total annual receipts by all pulp mills of about $5.30 billion. About 10 percent of U.S. pulp mills are in the Pacific Northwest.

Due to resin-content differences, pulp mills cannot use various species of wood chips indiscriminately. Pulp mills designed to process wood chips of *Pinus radiata* or similar species should, therefore, be the only ones directly affected by this rule. It is estimated that less than one-half of U.S. pulp mills could use *Pinus radiata* wood chips.[20] Assuming an equal distribution of these pulp mills among all pulp mills, size-wise, ''small'' pulp mill firms directly affected would then number between 10 and 13, based on 1994 data. These numbers are likely to be an overestimation, since not all of the ''small'' firms that could utilize *Pinus radiata* wood chips are necessarily located in the Pacific Northwest. Regardless of the number of affected ''small'' pulp mill firms, having Chile as a source of *Pinus radiata* wood chips should be beneficial to pulp mills and their customers, to the extent lower chip prices are reflected in lower product prices.

Test shipments of *Pinus radiata* wood chips from Chile have been successfully imported by pulp mills in the Pacific Northwest. This rule will enable such shipments, using a surface pesticide treatment, to continue to take place when economically feasible. Although *Pinus radiata* wood chip production in the United States is negligible, this species can substitute for other species as a pulp fiber, given certain milling adjustments. Off-shore wood chip sources to supplement domestic supply are advantageous to pulp mills, given

[17] Richard Haynes, USDA Forest Service, personal communication.

[18] This is the latest year for which data is available from the ''SBA Office of Advocacy, Statistics on Small Business'' Web home page.

[19] Richard Haynes, USDA Forest Service, personal communication.

[20] Byron Lundi, Georgia-Pacific, personal communication.

the volatility of pulp prices. Chile's wood products industry has a large export component and is expected to be a reliable source when pulp prices prompt wood chip exports to the United States. Adverse economic effects for wood chip producers in the Pacific Northwest will be felt by those producers who are unable to reduce costs to meet import competition and who rely heavily on revenues from wood chips.

No figures are available concerning potential costs of pest introductions through importation of *Pinus radiata* wood chips from Chile. A pest risk assessment for the importation of *Pinus radiata* logs from Chile (''Pest Risk Assessment of the Importation of *Pinus radiata, Nothofagus dombeyi,* and *Laurelia philippiana* Logs from Chile,'' USDA Forest Service, Miscellaneous Publication No. 1517, September 1993) provides the phytosanitary basis for allowing the wood chips to be imported if they are treated as prescribed. The pest risk assessment supports our determination that *Pinus radiata* wood chips may be imported from Chile with negligible risk.

The pest risk assessment reported that in sharp contrast to native forests in Chile, that country's *Pinus radiata* plantations are relatively free of major insect and disease problems. Exceptions include the recently introduced European pine shoot moth (*Rhyaccionia buoliana*), *Hylurgus ligniperda* and two other species of European bark beetles, several needle disease fungi (*Dothistroma pini* and *Lophodermium* spp., among others), diplodia shoot blight (*Sphaeropsis sapinea*), and two species of blue stain fungi (*Ophiostoma picea* and *O. piliferum*). The wood wasp *Sirex noctilio* (considered to be the most important pest on *Pinus radiata* logs exported from New Zealand) and pine wood nematodes (*Bursaphelenchus* spp.) have yet to be found in Chile.

Among the insect pests of *Pinus radiata* analyzed in detail in the pest risk assessment, only the bark beetle *Hylurgus ligniperda* was considered to have a high pest risk potential. Moderate pest risk potentials were assigned to *Rhyephenes* spp., *Ernobius mollis, Urocerus gigas gigas, Neotermes chilensis, Porotermes quadricollis, Colobura alboplagiata,* and *Buprestis novemmaculata.* Among the pathogens, the stain fungi (*Ophiostoma* spp.) were found to merit a moderate to high pest risk potential, whereas the complex of needle diseases (*Dothistroma pini* and other species) and diplodia shoot blight (*Sphaeropsis sapinea*) were rated as moderate risks. Other pathogens were considered to be of low risk. One weed of concern (*Imperata condensata,* considered a variety of *I. cylindrica* or cogongrass) was identified.

Pests potentially affecting untreated *Pinus radiata* wood chips are a subset of those identified in the pest risk assessment, since wood chip production will physically remove or destroy most pests that could be present in the logs. Treatment with the surface pesticide required by this rule should prevent entry into the United States of any harmful insects or fungi that might remain.

The Pacific Northwest's coastal ranges and Cascade Mountains have some of the highest quality natural and planted conifer forests in the world, producing commodities ranging from pulp and paper, to lumber for construction, to ornamentals and Christmas trees. Introduced pests such as those described could affect forestry industries directly by causing damage or indirectly by curtailing commerce through quarantines.

Some potential costs of foreign timber pests have been estimated in other instances. For example, a pest risk assessment concerning Siberian timber imports estimated that the introduction of a single pest, larch canker, could cause direct timber losses of $129 million annually. The same study estimated that a worst-case scenario involving heavy establishment of exotic defoliators in the United States could cost $58 billion.[21]

Concerning consumer and producer effects of allowing *Pinus radiata* wood chips to be imported from Chile, data are insufficient to permit confident estimation of welfare changes. Time-series data for the estimation of elasticities of supply and demand are not available. Circumstantial evidence, however, suggests that pulp producers and pulp product consumers benefit from *Pinus radiata* wood chip imports from Chile, when their relative price is low compared to that of other wood chip species or sources. The test shipments from Chile resulted in U.S. wood chip imports worth $22.8 million and $19.3 million in 1995 and 1996, respectively. These shipments represented over 48 and 44 percent of all U.S. coniferous wood chip imports in those 2 years.[22]

The continuing reduction in timber sources in the Pacific Northwest will encourage more wood imports in the future, and Chile's expanded commercial forestry plantings promise a prominent role for that country as a wood products exporter. Effects on prices, if any, from imports for U.S. wood chip producers should be very small, since coniferous wood chip imports are less than one percent of U.S. production.

Moreover, trade statistics indicate that U.S. coniferous wood chip producers are finding overseas markets as profitable as their Chilean counterparts. U.S. coniferous wood chip exports in 1995 were valued at more than $222 million, and in 1996, at more than $181 million. As is true for Chile, the principal overseas coniferous wood chip market for the United States is Japan.[23]

This rule includes a reporting and recordkeeping requirement that wood chips imported from Chile must be accompanied by a certificate issued by the Government of Chile, stating that all the applicable requirements of the regulations have been met.

We considered taking no action as an alternative to this rule. The no action alternative was rejected because we believe that the provisions of this rule will provide more supply alternatives for wood chip consumers, and make compliance easier for regulated individuals, without increasing the risk of introducing a plant pest into the United States.

**Executive Order 12988**

This rule has been reviewed under Executive Order 12988, Civil Justice Reform. This rule: (1) Preempts all State and local laws and regulations that are inconsistent with this rule; (2) has no retroactive effect; and (3) does not require administrative proceedings before parties may file suit in court challenging this rule.

**National Environmental Policy Act**

An environmental assessment and finding of no significant impact have been prepared for this rule. The assessment provides a basis for the conclusion that the importation of *Pinus radiata* wood chips from Chile under the conditions specified in this rule will not present a risk of introducing or disseminating plant pests and will not have a significant impact on the quality of the human environment. Based on the finding of no significant impact, the Administrator of the Animal and Plant Health Inspection Service has determined that an environmental impact statement need not be prepared.

The environmental assessment and finding of no significant impact were

[21] ''Importation of Logs, Lumber, and Other Unmanufactured Wood Articles: Final Supplemental to the Environmental Impact Statement, May 1988,'' USDA APHIS.

[22] FAS Global Agricultural Trade System, using data from the United Nations Statistical Office.

[23] FAS Global Trade System, using data from the United Nations Statistical Office.

prepared in accordance with: (1) The National Environmental Policy Act of 1969, as amended (NEPA) (42 U.S.C. 4321 *et seq.*), (2) regulations of the Council on Environmental Quality for implementing the procedural provisions of NEPA (40 CFR parts 1500–1508), (3) USDA regulations implementing NEPA (7 CFR part 1b), and (4) APHIS' NEPA Implementing Procedures (7 CFR part 372).

Copies of the environmental assessment and finding of no significant impact are available for public inspection at USDA, room 1141, South Building, 14th Street and Independence Avenue SW., Washington, DC, between 8 a.m. and 4:30 p.m., Monday through Friday, except holidays. Persons wishing to inspect copies are requested to call ahead on (202) 690–2817 to facilitate entry into the reading room. In addition, copies may be obtained by writing to the individual listed under **FOR FURTHER INFORMATION CONTACT.**

## Paperwork Reduction Act

In accordance with section 3507(d) of the Paperwork Reduction Act of 1995 (44 U.S.C. 3501 *et seq.*), the information collection or recordkeeping requirements included in this final rule have been approved by the Office of Management and Budget (OMB). The assigned OMB control number is 0579–0135.

## List of Subjects in 7 CFR Part 319

Bees, Coffee, Cotton, Fruits, Honey, Imports, Logs, Nursery stock, Plant diseases and pests, Quarantine, Reporting and recordkeeping requirements, Rice, Vegetables.

Accordingly, we are amending 7 CFR part 319 as follows:

## PART 319—FOREIGN QUARANTINE NOTICES

1. The authority citation for part 319 continues to read as follows:

**Authority:** 7 U.S.C. 150dd, 150ee, 150ff, 151–167, 450, 2803, and 2809; 21 U.S.C. 136 and 136a; 7 CFR 2.22, 2.80, and 371.2(c).

2. In § 319.40–1, a definition of the word *fines* is added in alphabetical order to read as follows:

### § 319.40–1 Definitions.

* * * * *

*Fines.* Small particles or fragments of wood, slightly larger than sawdust, that result from chipping, sawing, or processing wood.

* * * * *

3. In § 319.40–6, paragraph (c) is revised to read as follows:

### § 319.40–6 Universal importation options.

* * * * *

(c) *Wood chips and bark chips.* (1) *From Chile.* Wood chips from Chile that are derived from Monterey or Radiata pine *(Pinus radiata)* logs may be imported in accordance with § 319.40–6(c)(2) or in accordance with the following requirements:

(i) The wood chips must be accompanied by a certificate stating that the wood chips meet the requirements in paragraphs (c)(1)(i)(A) through (c)(1)(i)(C) of this section.

(A) The wood chips were treated with a surface pesticide treatment in accordance with § 319.40–7(e) within 24 hours after the log was chipped and were retreated with a surface pesticide treatment in accordance with § 319.40–7(e) if more than 30 days elapsed between the date of the first treatment and the date of export to the United States.

(B) The wood chips were derived from logs from live, healthy, plantation-grown trees that were apparently free of plant pests, plant pest damage, and decay organisms, and the logs used to make the wood chips were debarked in accordance with § 319.40–7(b) before being chipped.

(C) No more than 45 days elapsed from the time the trees used to make the wood chips were felled to the time the wood chips were exported.

(ii) During shipment to the United States, no other regulated articles (other than solid wood packing materials) are permitted in the holds or sealed containers carrying the wood chips. Wood chips on the vessel's deck must be in a sealed container.

(iii) The wood chips must be consigned to a facility in the United States that operates under a compliance agreement in accordance with § 319.40–8. The following requirements apply upon arrival of the wood chips in the United States:

(A) Upon arrival in the United States, the wood chips must be unloaded by a conveyor that is covered to prevent the chips from being blown by the wind and from accidental spillage. The facility receiving the wood chips must have a procedure in place to retrieve any chips that fall during unloading.

(B) If the wood chips must be transported after arrival, the chips must be covered or safeguarded in a manner that prevents the chips from spilling or falling off the means of conveyance or from being blown off the means of conveyance by wind.

(C) The wood chips must be stored at the facility on a paved surface and must be kept segregated from other regulated articles from the time of discharge from the means of conveyance until the chips are processed. The storage area must not be adjacent to wooded areas.

(D) The wood chips must be processed within 45 days of arrival at the facility. Any fines or unusable wood chips must be disposed of by burning within 45 days of arrival at the facility.

(2) *From locations other than certain places in Asia.* Wood chips and bark chips from any place except places in Asia that are east of 60° east longitude and north of the Tropic of Cancer may be imported in accordance with this paragraph.

(i) The wood chips or bark chips must be accompanied by an importer document stating that the wood chips or bark chips were either:

(A) Derived from live, healthy, tropical species of plantation-grown trees grown in tropical areas; or

(B) Fumigated with methyl bromide in accordance with § 319.40–7(f)(3), heat treated in accordance with § 319.40–7(c), or heat treated with moisture reduction in accordance with § 319.40–7(d).

(ii) During shipment to the United States, no other regulated articles (other than solid wood packing materials) are permitted in the holds or sealed containers carrying the wood chips or bark chips. Wood chips or bark chips on the vessel's deck must be in a sealed container; *Except that:* If the wood chips or bark chips are derived from live, healthy, plantation-grown trees in tropical areas, they may be shipped on deck if no other regulated articles are present on the vessel and the wood chips or bark chips are completely covered by a tarpaulin during the entire journey directly to the United States.

(iii) The wood chips or bark chips must be free from rot at the time of importation, unless accompanied by an importer document stating that the entire lot was fumigated with methyl bromide in accordance with § 319.40–7(f)(3), heat treated in accordance with § 319.40–7(c), or heat treated with moisture reduction in accordance with § 319.40–7(d).

(iv) Wood chips or bark chips imported in accordance with this paragraph must be consigned to a facility operating under a compliance agreement in accordance with § 319.40–8. The wood chips or bark chips must be burned, heat treated in accordance with § 319.40–7(c), heat treated with moisture reduction in accordance with § 319.40–7(d), or otherwise processed in a manner that will destroy any plant pests associated with the wood chips or bark chips within 30 days of arrival at the facility. If the wood chips or bark chips are to be used for mulching or

composting, they must first be fumigated in accordance with § 319.40–7(f)(3), heat treated in accordance with § 319.40–7(c), or heat treated with moisture reduction in accordance with § 319.40–7(d).

* * * * *

4. In § 319.40–7, paragraph (e) is revised to read as follows.

**§ 319.40–7 Treatments and safeguards.**

* * * * *

(e) *Surface pesticide treatments.* All United States Environmental Protection Agency registered surface pesticide treatments are authorized for regulated articles imported in accordance with this subpart, except that *Pinus radiata* wood chips from Chile must be treated in accordance with § 319.40–7(e)(2). Surface pesticide treatments must be conducted in accordance with label directions approved by the United States Environmental Protection Agency. Under the following circumstances, surface pesticide treatments must also be conducted as follows:

(1) *Heat treated logs.* When used on heat treated logs, a surface pesticide treatment must be first applied within 48 hours following heat treatment. The surface pesticide treatment must be repeated at least every 30 days during storage of the regulated article, with the final treatment occurring no more than 30 days prior to departure of the means of conveyance that carries the regulated articles to the United States.

(2) *Pinus radiata wood chips from Chile.* When used on *Pinus radiata* wood chips from Chile, a surface pesticide consisting of the following must be used: A mixture of a fungicide containing 64.8percent of the active ingredient didecyl dimethyl ammonium chloride and 7.6 percent of the active ingredient 3-iodo-2-propynl butylcarbamate and an insecticide containing 44.9percent of the active ingredient chlorpyrifos phosphorothioate. The wood chips must be sprayed with the pesticide so that all the chips are exposed to the chemical on all sides. During the entire interval between treatment and export, the wood chips must be stored, handled, or safeguarded in a manner that prevents any infestation of the wood chips by plant pests.

* * * * *

Done in Washington, DC, this 17th day of April 2000.

**Bobby R. Acord,**

*Acting Administrator, Animal and Plant Health Inspection Service.*

[FR Doc. 00–9937 Filed 4–19–00; 8:45 am]

BILLING CODE 3410–34–P

## FARM CREDIT ADMINISTRATION

## 12 CFR Chapter VI

**RIN 3052–AB97**

## Regulatory Burden

**AGENCY:** Farm Credit Administration (FCA).

**ACTION:** Statement on regulatory burden.

**SUMMARY:** This is the second phase of our recent initiative to reduce regulatory burden on the Farm Credit System (FCS or System). Many System institutions responded to our August 1998 request for comments by identifying regulations that they considered burdensome. We deleted several unnecessary or obsolete regulations in the first phase of this project. This document informs the public of those regulations that we will retain without amendment because they either: Implement or interpret the Farm Credit Act of 1971, as amended (Act); or protect the safety and soundness of the System. We also identify pending or future actions that will respond to remaining regulatory burden issues.

**FOR FURTHER INFORMATION CONTACT:**

Alan Markowitz, Senior Policy Analyst, Office of Policy and Analysis, Farm Credit Administration, McLean, VA 22102–5090, (703) 883–4479;

or

Richard A. Katz, Senior Attorney, or Beth Salyer, Attorney-Advisor, Office of General Counsel, Farm Credit Administration, McLean, VA 22102–5090, (703) 883–4020, TDD (703) 883–4444.

**SUPPLEMENTARY INFORMATION:**

### I. Background

On August 18, 1998, we published a document in the **Federal Register** inviting you to identify existing regulations and policies that impose unnecessary burdens on the FCS. *See* 63 FR 44176. On November 18, 1998, we extended the comment period to January 19, 1999. *See* 63 FR 64013. We specifically asked you to focus on those regulations and policies that are ineffective, duplicate other governmental requirements, or impose burdens that are greater than the benefits received. We took this action in our continuing effort to improve the regulatory environment so System institutions can more effectively serve farmers, ranchers, aquatic producers, their cooperatives, and other rural residents.

In the first phase of our effort to reduce regulatory burden on the FCS, we repealed or revised 16 regulations. *See* 64 FR 43046, Aug. 9, 1999.

The purpose of this document is to inform you of those regulations that we will retain without amendment. In most cases, these regulations are either required by statute or are necessary to ensure the safety and soundness of System institutions. For these reasons, the FCA will not make the suggested changes to the following regulations: §§ 613.3020; 613.3030; 613.3300; 614.4200(b)(1); 614.4335(c)(1)(i); 614.4359; and 614.4920. The next section explains our reasons for retaining these regulations.

### II. Regulations that We Will Retain Without Revision

*A. Farm-related Businesses*

Seven commenters asked us to amend § 613.3020 so the FCS can finance farm-related businesses that supply only goods to farmers and ranchers. Sections 1.11(c)(1) and 2.4(a)(3) of the Act limit eligibility to businesses that furnish farm-related services to farmers and ranchers. Businesses that sell only farm-related goods to agricultural producers do not qualify for FCS financing under these provisions of the Act. Therefore, we cannot grant this request.

Two Farm Credit banks and one association asked us to amend § 613.3020(b)(2) to allow businesses that derive less than 50 percent of their income from farm-related services to obtain System financing for all of their credit needs. The FCA updated this regulation in 1997 to expand financing opportunities for farm-related businesses that offer both goods and services. At that time, the FCA Board determined that a 50-percent threshold gave appropriate effect to the Act. *See* 62 FR 4429, Jan. 30, 1997. This standard ensures that only businesses that primarily provide farm-related services receive full financing from System lenders. The United States Court of Appeals recently upheld the provisions in § 613.3020(b) that limit System financing to eligible businesses that derive less than 50 percent of their income from furnishing farm-related services to farmers and ranchers.[1] We continue to believe that the current regulation strikes the best balance for securing the credit needs of farm-related business within the limitations of the Act.

*B. Rural Housing*

Many System institutions assert that § 613.3030 unnecessarily restricts the System's ability to finance housing for rural residents who are not farmers,

[1] *Independent Bankers Association of America* v. *Farm Credit Administration,* 164 F.3d 661 (D.C. Cir. 1999).

ranchers, or aquatic producers. Two FCS banks, an association, and the Farm Credit Council (Council) requested relief from § 613.3030(a)(3), which allows System lenders to finance non-farm rural homes only in towns or villages with populations not exceeding 2,500 inhabitants. Changing population patterns since Congress set this limit almost 30 years ago make it increasingly difficult for the System to meet the credit needs of homebuyers in rural areas. Because this restriction is statutory, however, we cannot grant the commenters' request.

Three Farm Credit banks and the Council asked us to repeal § 613.3030(c). Under this provision, FCS banks and associations can extend credit to eligible rural homeowners only for the purposes of buying, building, remodeling, repairing or improving rural homes, or refinancing the existing indebtedness on such homes. The commenters want us to remove this restriction so eligible non-farm rural homeowners can borrow against the equity in their homes and use the loan proceeds for any purpose. We thoroughly addressed this issue when we developed § 613.3030 during an extensive rulemaking that ended in 1997. *See* 62 FR 4429, Jan. 30, 1997. We are not inclined to change our policy at this time.

*C. Similar Entities*

A Farm Credit bank requested changes to § 613.3300, which governs FCS participation in loans that non-System lenders make to similar entities. Under sections 3.1(11)(B) and 4.18A of the Act, similar entities are parties that are ineligible to borrow directly from System banks and associations but derive most of their income from, or have most of their assets invested in, the same activities as eligible borrowers.

The bank wants us to revise the rule so the FCS can make loans directly to similar entities. We cannot grant this request because sections 3.1(11)(B) and 4.18A of the Act do not authorize Farm Credit banks and associations to lend directly to similar entities. These statutory provisions specify that System institutions may only participate in credits that non-System lenders extend to similar entities. Further, sections 3.1(11)(B)(i)(bb) and 4.18A(b)(2) of the Act limit System participation in similar entity loans to less than 50 percent of the principal.

*D. First Lien Requirement*

Three Farm Credit banks, one association, and the Council asked us to repeal a provision in § 614.4200(b)(1) that requires Farm Credit banks, Federal land credit associations, and agricultural credit associations to secure their long-term mortgage loans with a first lien on the borrower's real estate. Section 1.7(a)(1) of the Act expressly requires FCS long-term mortgage lenders to take a first lien on the borrower's property in a rural area as security for the loan. Thus, this regulation cannot be repealed. Additionally, failure to secure a long-term mortgage loan with a first lien on the security property may be an unsafe and unsound practice. However, long-term mortgage lenders may still take additional collateral without a first lien, as an abundance of caution.

*E. Borrower Stock for Loan Sales Within the FCS*

Currently, § 614.4335(c)(1)(i) allows borrowers whose loans are sold within the FCS to decide whether to hold voting stock in the association that bought or sold their loans. Two Farm Credit banks, two associations, and the Council requested a revision that would allow System institutions involved in the transactions, rather than the borrower, to make this choice. We believe it is the right of a stockholder to elect whether to hold stock in a selling or purchasing FCS institution. This shareholder right is a basic tenant of FCS cooperative principles and this provision ensures that farmers, ranchers, and aquatic producers have the right to participate in the affairs of the FCS association of their choice when their loans are sold within the System.

*F. Attribution Rules for Lending Limit Calculations*

Two Farm Credit banks, one association, and the Council asked us to revise the attribution rules for calculating lending limits. These commenters claim that the current regulation, § 614.4359, is confusing. The FCA is fully committed to the plain language goals of the National Performance Review. Therefore, we plan to rewrite these regulations so they are easier to understand and apply. However, we do not plan to make substantive changes to the attribution rules at this time. We believe they protect the safety and soundness of System banks and associations by limiting their exposure to risk from any one borrower or a group of related borrowers. Additionally, our existing regulation is consistent with the approach of other Federal bank regulatory agencies.

*G. Flood Insurance*

Two Farm Credit banks asked us to exempt certain farm and ranch outbuildings and commercial agribusiness firms from flood insurance requirements. The National Flood Insurance Reform Act of 1994 (1994 Reform Act) requires flood insurance for all buildings that secure loans made by the FCS, commercial banks, credit unions, and savings associations if those buildings are in areas that the Federal Emergency Management Agency deems to be in special flood hazard areas. The 1994 Reform Act offers no flexibility for the FCA to make regulatory exclusions for farm and ranch outbuildings, or commercial agribusiness firms. Furthermore, we joined with five other Federal bank regulatory agencies to ensure that the same flood insurance rules apply to commercial banks, savings associations, credit unions, and the FCS. Therefore, we are unable to repeal § 614.4920(b) because it is a statutory requirement.

**III. Future Efforts to Reduce Unnecessary Regulatory Burdens on FCS Institutions**

We will address all remaining regulatory burden issues that System institutions raised during the comment period in separate regulatory projects. The comments indicate that some System institutions may need guidance about how some regulations mentioned in Part II of this statement apply in certain situations. We hope to clarify these regulations in the future. When we complete our efforts, the regulatory burdens on the System will be reduced. However, we will maintain those regulations that are necessary to implement the Act and are critical for the safety and soundness of the System. Our approach will enable the FCS to continue to provide much needed credit to America's farmers, ranchers, aquatic producers, their cooperatives and other rural residents.

Dated: April 13, 2000.

**Vivian Portis,**

*Secretary, Farm Credit Administration Board.*

[FR Doc. 00–9850 Filed 4–19–00; 8:45 am]

BILLING CODE 6705–01–P

---

## NATIONAL CREDIT UNION ADMINISTRATION

## 12 CFR Part 701

## Organization and Operations of Federal Credit Unions

**AGENCY:** National Credit Union Administration (NCUA).

**ACTION:** Final rule.

**SUMMARY:** NCUA is amending its rule pertaining to secondary capital accounts for low-income designated credit unions to conform it to the recently issued prompt corrective action rule (PCA). Under PCA, NCUA has discretionary authority, under certain circumstances, to prohibit a credit union from paying principal, dividends or interest on the credit union's secondary capital accounts established after August 7, 2000.

**DATES:** This rule is effective August 7, 2000.

**ADDRESSES:** National Credit Union Administration, 1775 Duke Street, Alexandria, Virginia 22314–3428.

**FOR FURTHER INFORMATION CONTACT:** Frank S. Kressman, Staff Attorney, Division of Operations, Office of General Counsel, at the above address or telephone: (703) 518–6540.

**SUPPLEMENTARY INFORMATION:** Federal credit unions that serve predominantly low-income members may be designated by NCUA as low-income credit unions (LICUs). LICUs play an important role in providing financial services to low-income individuals and communities for whom these services are often unavailable. LICUs often find it difficult, however, to accumulate capital due to the limited resources of their members. To enhance LICUs' ability to build capital, § 701.34 of NCUA's regulations permits LICUs to offer uninsured secondary capital accounts to nonnatural person members and nonmembers. 12 CFR § 701.34.

Section 701.34 provides that funds in the secondary capital account must be available to cover operating losses realized by the credit union that exceed its net available reserves and undivided earnings. It also provides that, to the extent secondary capital account funds are used to cover operating losses, the credit union cannot replenish those funds under any circumstances.

In 1998, Congress amended the Federal Credit Union Act to establish minimum capital standards for federally-insured credit unions. NCUA was required to adopt, by regulation, a PCA system to restore the capital level of credit unions that become inadequately capitalized. The NCUA Board has established, among other things, a comprehensive framework of mandatory and discretionary supervisory actions indexed to defined net worth categories. 65 FR 8559 (February 18, 2000).

Within that framework, PCA distinguishes ''new'' credit unions, those that have been in operation less than 10 years and have $10 million or less in assets, from other credit unions. 12 U.S.C. 1790d(o)(4). New credit unions are subject to an alternative system of PCA with net worth categories that differ from those applicable to other credit unions. 12 U.S.C. 1790d(b)(2)(A).

A credit union, other than a new credit union, that has a net worth ratio of less than 2% is categorized as ''critically undercapitalized''. Section 702.204(b)(11) of the PCA rules permits NCUA to take discretionary action against critically undercapitalized credit unions. Specifically, it provides that:

> Beginning 60 days after the effective date of classification of a credit union as ''critically undercapitalized,'' [NCUA has the discretion to] prohibit payments of principal, dividends or interest on the credit union's uninsured secondary capital accounts established after August 7, 2000, except that unpaid dividends or interest shall continue to accrue under the terms of the account to the extent permitted by law * * *.

12 CFR 702.204(b)(11).

New credit unions with net worth ratios of less than 6% are categorized as ''moderately capitalized'' (3.5%–5.99%), ''marginally capitalized'' (2%–3.49%), ''minimally capitalized'' (0%–1.99%) or ''uncapitalized'' (less than 0%). 12 CFR 702.302(c). Sections 702.304(b) and 702.305(b) of the PCA rules permit NCUA to take discretionary actions against new credit unions that fall within these categories. Specifically, each provides that:

> [T]he NCUA Board may, by directive, take one or more of the actions prescribed in § 702.204(b) [of the PCA rules, including the prohibition of payments on secondary capital accounts] if the credit union's net worth ratio has not increased consistent with its then-present business plan, or the credit union has failed to undertake any mandatory supervisory action prescribed in paragraph (a) of this section.

12 CFR 702.304(b) and 702.305(b).

The below amendments conform the secondary capital rules to the PCA rules.

## Final Rule

The NCUA Board has issued this as a final rule effective August 7, 2000. There is a strong public interest in having secondary capital rules in place that are consistent with and conform to the provisions of PCA. As part of the PCA rulemaking process, notice of and an opportunity to comment on the below amendments to the secondary capital rule were given in compliance with the Administrative Procedure Act (5 U.S.C. 551) (APA). 63 FR 57938 (October 29, 1998); 64 FR 27090 (May 18, 1999); 64 FR 44663 (August 17, 1999); 65 FR 8559 (February 18, 2000). Comments pertaining to these amendments were incorporated into PCA. Additionally, these conforming amendments are being published far in advance of the 30 days required by Section 553(d) of the APA (5 U.S.C. 553(d)) as neither PCA nor the conforming amendments are effective until August 7, 2000. Accordingly, for good cause, the Board finds that, with respect to the conforming amendments, NCUA has complied with the notice and public procedure requirements of the APA. The Board also finds that additional notice and public procedure would be duplicative and excessive and, therefore, under 5 U.S.C. 553(b)(3)(B), are impracticable, unnecessary, and contrary to the public interest.

## Regulatory Procedures

### *Regulatory Flexibility Act*

The Regulatory Flexibility Act requires NCUA to prepare an analysis to describe any significant economic impact agency rulemaking may have on a substantial number of small credit unions. For purposes of this analysis, credit unions under $1 million in assets are considered small credit unions. As of June 30, 1999, there were 1,690 small credit unions with a total of $807.3 million in assets, having an average size of $0.5 million. Small credit unions make up 15.6% of all credit unions, but only 0.2% of all credit union assets.

It is anticipated that this final rule will effect relatively few small credit unions. It will apply only to those credit unions that establish secondary capital accounts after August 7, 2000 that then become classified as critically undercapitalized or otherwise trigger potential discretionary action under PCA. Even then, corrective action will only be taken where NCUA chooses to exercise its discretion to do so. NCUA has determined that this rule will not have a significant economic impact on a substantial number of small credit unions.

### *Paperwork Reduction Act*

NCUA has determined that these amendments to § 701.34 do not increase paperwork requirements under the Paperwork Reduction Act of 1995 and regulations of the Office of Management and Budget.

### *Executive Order 13132*

Executive Order 13132 encourages independent regulatory agencies to consider the impact of their regulatory actions on state and local interests. In adherence to fundamental federalism principles, NCUA, an independent regulatory agency as defined in 44 U.S.C. 3502(5), voluntarily complies

with the executive order. This rule will apply to all federally-insured credit unions offering secondary capital accounts pursuant to § 701.34, but it will not have substantial direct effects on the states, on the relationship between the national government and the states, or on the distribution of power and responsibilities among the various levels of government. NCUA has determined that this rule does not constitute a policy that has federalism implications for purposes of the executive order.

*Assessment of Federal Regulations and Policies on Families*

NCUA has determined that this rule will not affect family well-being within the meaning of Section 654 of the Treasury and General Government Appropriations Act, 1999, Pub. L. 105–277, 112 Stat. 2681 (1998).

*Small Business Regulatory Enforcement Fairness Act*

The Small Business Regulatory Enforcement Fairness Act of 1996 (Pub. L. 104–121) provides generally for congressional review of agency rules. A reporting requirement is triggered in instances where NCUA issues a final rule as defined by Section 551 of the APA. 5 U.S.C. 551. The Office of Management and Budget has determined that this rule is not a major rule for purposes of the Small Business Regulatory Enforcement Fairness Act of 1996.

**List of Subjects in 12 CFR Part 701**

Credit unions, Reporting and recordkeeping requirements.

By the National Credit Union Administration Board on April 13, 2000.

**Becky Baker,**

*Secretary of the Board.*

For the reasons set forth above, 12 CFR part 701 is amended as follows:

## PART 701—ORGANIZATION AND OPERATIONS OF FEDERAL CREDIT UNIONS

1. The authority citation for part 701 continues to read as follows:

**Authority:** 12 U.S.C. 1752(5), 1755, 1756, 1757, 1759, 1761a, 1761b, 1766, 1767, 1782, 1784, 1787, and 1789. Section 701.6 is also authorized by 31 U.S.C. 3717. Section 701.31 is also authorized by 15 U.S.C. 1601 *et seq.,* 42 U.S.C. 1861 and 42 U.S.C. 3601–3610. Section 701.35 is also authorized by 42 U.S.C. 4311–4312.

2. Section 701.34 is amended by adding paragraphs (b)(12) and (b)(13) to read as follows:

**§ 701.34 Designation of low-income status; receipt of secondary capital accounts by low-income designated credit unions.**

* * * * *

(b) * * *

(12) As provided in § 702.204(b)(11) of this chapter, 60 days after the effective date of a credit union being classified as ''critically undercapitalized'' under NCUA's prompt corrective action rules, the NCUA Board may prohibit payments of principal, dividends or interest on the credit union's uninsured secondary capital accounts established after August 7, 2000, except that unpaid dividends or interest shall continue to accrue under the terms of the account to the extent permitted by law.

(13) As provided in §§ 702.304(b) and 702.305(b) of this chapter, the NCUA Board may prohibit payments of principal, dividends or interest on the uninsured secondary capital accounts established after August 7, 2000 of a ''moderately capitalized'', ''marginally capitalized'', ''minimally capitalized'' or ''uncapitalized'' credit union if the credit union's net worth ratio has not increased consistent with its then-present business plan, or the credit union has failed to undertake any mandatory supervisory action prescribed in §§ 702.304(a) or 702.305(a) of this chapter. If NCUA takes this action, unpaid dividends or interest shall continue to accrue under the terms of the account to the extent permitted by law.

* * * * *

3. The Appendix to § 701.34 is amended by adding a paragraph to immediately precede the signature line to read as follows:

**Appendix to § 701.34 [Amended]**

* * * * *

• The NCUA may prohibit payments of principal, dividends or interest on _____ (name of credit union) uninsured secondary capital accounts established after August 7, 2000, if _____ (name of credit union) has been in operation less than 10 years and has $10 million or less in assets and the provisions of § 701.34(b)(13) of NCUA's regulations are met, or, if _____ (name of credit union) has been in operation for 10 years or more or has more than $10 million in assets and the provisions of § 701.34(b)(12) of NCUA's regulations are met.

* * * * *

[FR Doc. 00–9855 Filed 4–19–00; 8:45 am]

BILLING CODE 7535–01–P

## NATIONAL CREDIT UNION ADMINISTRATION

## 12 CFR Part 707

## Truth in Savings

**AGENCY:** National Credit Union Administration (NCUA).

**ACTION:** Final rule.

**SUMMARY:** NCUA is amending its regulations that implement the Truth in Savings Act (TISA). This final rule allows credit unions to deliver periodic statement disclosures required by NCUA's regulations in electronic form if the member agrees to this form of delivery.

**DATES:** This rule is effective May 22, 2000.

**ADDRESSES:** National Credit Union Administration, 1775 Duke Street, Alexandria, VA 22314–3428.

**FOR FURTHER INFORMATION CONTACT:** Frank S. Kressman, Staff Attorney, Division of Operations, Office of General Counsel, at the above address or telephone: (703) 518–6540.

**SUPPLEMENTARY INFORMATION**

### A. Background

Part 707 of NCUA's regulations implements TISA. 12 CFR part 707. The purpose of part 707 and TISA is to assist members in making meaningful comparisons among accounts offered by credit unions and other financial institutions. Part 707 and TISA require, among other things, disclosure of yields, fees and other terms concerning share accounts to members at account opening, upon request, when changes in terms occur and in periodic statements. Many of these disclosures must be written. Many laws requiring that information be in writing consider information in electronic form to be written. Information produced, stored, or communicated by computer is also generally considered to be a writing, where visual text is involved.

The Board of Governors of the Federal Reserve System (Federal Reserve) issued an interim rule amending its Regulation DD, which implements TISA. That rule allows depository institutions to deliver periodic statement disclosures required by Regulation DD in electronic form if the consumer agrees to that form of delivery. 64 FR 49846 (September 14, 1999). In doing so, the Federal Reserve stated that electronic delivery of these kinds of disclosures will reduce paperwork and costs for institutions and may benefit consumers by allowing them to receive their periodic account statements, including required

disclosures, more quickly and in a more convenient form.

The Federal Reserve's interim rule permits depository institutions to deliver periodic statement disclosures electronically if the consumer agrees to this method of delivery, but does not specifically discuss what constitutes a valid agreement between the consumer and depository institution. The Federal Reserve has stated that whether the parties have an agreement is to be determined by state law. It has also stated that consumers should be clearly informed when they consent to electronic delivery of periodic statements and disclosures. The Federal Reserve has further stated that the periodic statement must be provided in a form that can be displayed as visual text and must be clear and conspicuous and in a form that the consumer can retain.

The Federal Reserve's interim rule applies only to periodic statement disclosures. Other disclosures required by TISA and Regulation DD may not be delivered in electronic form, however, the Federal Reserve has issued a proposal addressing electronic delivery of these other disclosures. 64 FR 49740 (September 14, 1999). Because TISA requires NCUA to issue rules substantially similar to those issued by the Federal Reserve, NCUA will continue to follow the development of the Federal Reserve's regulation in this area. As in the past, when the Federal Reserve has issued a final or interim final rule, the NCUA will act to issue a substantially similar rule for credit unions.

TISA requires NCUA to promulgate regulations substantially similar to those promulgated by the Federal Reserve. 12 U.S.C. 4311(b). In doing so, NCUA is to take into account the unique nature of credit unions and the limitations under which they may pay dividends on member accounts. In compliance with TISA, NCUA issued an interim final rule with request for comments in November 1999 that is substantially similar to the above rule issued by the Federal Reserve. 64 FR 66355 (November 26, 1999).

**B. Comments**

The NCUA Board received eight comment letters regarding the interim final rule: four from credit union trade associations; two from federal credit unions; one from a state credit union; and one from an association of state credit union supervisors. The commenters unanimously supported the interim rule.

Three commenters, however, suggested the rule provide additional clarification with respect to the agreement between a credit union and its member that permits electronic delivery of periodic statement disclosures. Specifically, they wanted guidance on what constitutes a valid agreement and how a member's consent may be obtained. As articulated by the Federal Reserve, the rule purposefully does not define what constitutes a valid agreement or dictate a method of obtaining a member's consent. This is to provide maximum flexibility to credit unions and their members. Whether the parties have a valid agreement is appropriately determined by state law.

Two commenters suggested that a credit union should be permitted to deliver electronic periodic statement disclosures to an e-mail address designated by the member or to an area on a website accessible to the member. NCUA intends for credit unions to have flexibility in how they deliver these electronic disclosures. Both of these methods, among others, are permissible under the rule.

**C. Regulatory Procedures**

*Regulatory Flexibility Act*

The Regulatory Flexibility Act requires NCUA to prepare an analysis to describe any significant economic impact agency rulemaking may have on a substantial number of small credit unions. For purposes of this analysis, credit unions under $1 million in assets are considered small credit unions. As of June 30, 1999, there were 1,690 small credit unions with a total of $807.3 million in assets, having an average size of $0.5 million. Small credit unions make up 15.6% of all credit unions, but only 0.2% of all credit union assets.

This final rule provides credit unions with an optional and alternative method of delivering certain required disclosures. Credit unions are free to choose not to utilize this alternative. Credit unions that choose to use this alternative will likely realize a reduction in their costs of delivery as a result. The NCUA has determined and certifies that this final rule will not have a significant economic impact on a substantial number of small credit unions.

*Paperwork Reduction Act*

NCUA has determined that these amendments to part 707 do not increase paperwork requirements under the Paperwork Reduction Act of 1995 and regulations of the Office of Management and Budget.

*Executive Order 13132*

Executive Order 13132 encourages independent regulatory agencies to consider the impact of their regulatory actions on state and local interests. In adherence to fundamental federalism principles, NCUA, an independent regulatory agency as defined in 44 U.S.C. 3502(5), voluntarily complies with the executive order. This rule will apply to all federally-insured credit unions, but it will not have substantial direct effect on the states, on the relationship between the national government and the states, or on the distribution of power and responsibilities among the various levels of government. NCUA has determined that this rule does not constitute a policy that has federalism implications for purposes of the executive order.

*Assessment of Federal Regulations and Policies on Families*

NCUA has determined that this rule will not affect family well-being within the meaning of Section 654 of the Treasury and General Government Appropriations Act, 1999, Pub. L. 105–277, 112 Stat. 2681 (1998).

*Small Business Regulatory Enforcement Fairness Act*

The Small Business Regulatory Enforcement Fairness Act of 1996 (Pub. L. 104–121) provides generally for congressional review of agency rules. A reporting requirement is triggered in instances where NCUA issues a final rule as defined by Section 551 of the Administrative Procedure Act. 5 U.S.C. 551. The Office of Management and Budget has determined that this rule is not a major rule for purposes of the Small Business Regulatory Enforcement Fairness Act of 1996.

**List of Subjects in 12 CFR Part 707**

Advertising, Consumer protection, Credit unions, Reporting and recordkeeping requirements, Truth in savings.

By the National Credit Union Administration Board on April 13, 2000.

**Becky Baker,**

*Secretary of the Board.*

## PART 707—TRUTH IN SAVINGS

Accordingly, the interim final rule amending 12 CFR part 707, which was published at 64 FR 66355 on November 26, 1999, is adopted as a final rule without change.

[FR Doc. 00–9854 Filed 4–19–00; 8:45 am]

BILLING CODE 7535–01–U

**DEPARTMENT OF TRANSPORTATION**

**Federal Aviation Administration**

**14 CFR Part 39**

**[Docket No. 2000–NM–81–AD; Amendment 39–11686; AD 99–23–22 R2]**

**RIN 2120–AA64**

## Airworthiness Directives; Various Transport Category Airplanes Equipped with Mode ''C'' Transponder(s) with Single Gillham Code Altitude Input

**AGENCY:** Federal Aviation Administration, DOT.

**ACTION:** Final rule; rescission.

**SUMMARY:** This amendment rescinds Airworthiness Directive (AD) 99–23–22 R1, which is applicable to various transport category airplanes equipped with Mode ''C'' transponder(s) with single Gillham code altitude input. That AD requires repetitive tests to detect discrepancies of the Mode ''C'' transponder(s), air data computer, and certain wiring connections; and corrective actions, if necessary. The requirements of that AD were intended to prevent false advisories that direct the flightcrew to change course and either climb or descend, which could result in the flightcrew deviating the airplane from its assigned flight path, and a possible mid-air collision. Since the issuance of that AD, test data have been collected that demonstrate that the repetitive tests are unnecessary.

**EFFECTIVE DATE:** April 20, 2000.

**FOR FURTHER INFORMATION CONTACT:** Peter Skaves, Aerospace Engineer, Airplane and Flight Crew Interface Branch, ANM–111, FAA, Transport Airplane Directorate, 1601 Lind Avenue, SW., Renton, Washington 98055–4056; telephone (425) 227–2795; fax (425) 227–1320.

**SUPPLEMENTARY INFORMATION:** On November 4, 1999, the Federal Aviation Administration (FAA) issued AD 99–23–22, amendment 39–11418 (64 FR 61493, November 12, 1999), as revised by AD 99–23–22 R1, amendment 39–11473 (64 FR 70181, December 16, 1999), applicable to various transport category airplanes equipped with Mode ''C'' transponder(s) with single Gillham code altitude input. That AD requires repetitive tests to detect discrepancies of the Mode ''C'' transponder(s), air data computer, and certain wiring connections; and corrective actions, if necessary. That action was prompted by reports that, during level flight, the Traffic Alert Collision Avoidance System (TCAS II) issued false advisories that directed the flightcrew to change course and either climb or descend. Such false advisories, if not corrected, could result in the flightcrew deviating the airplane from its assigned flight path and a possible mid-air collision.

### Actions Since Issuance of Previous AD

The compliance time for the initial test of the Mode ''C'' transponder(s) with single Gillham altitude code input, as required by AD 99–23–22 R1, has passed. Therefore, the FAA assumes that the test has been conducted at least once, and all applicable corrective actions have been accomplished, on all transport category airplanes affected by that AD. The following is a summary of the airplane inspections and test results:

*Aircraft Test Results (AD 99–23–22 R1)*

Aircraft test results reviewed = 1,142
Aircraft passing tests without corrective action required = 1,055
Aircraft failing tests with corrective action required = 87
Percent of aircraft that failed the AD test = 7.6%

*Aircraft Wiring/Avionics Failures*

Mode ''C'' transponder failures = 49
Air Data Computer (ADC) failures = 14
Encoding altimeter failures = 3
Gillham code wiring failures = 1
Miscellaneous wiring failures = 8
Failures sources under review = 12

The results of the transponder tests required by AD 99–23–22 R1 revealed that numerous Mode ''C'' transponders failed the test, and many of the Mode ''C'' test failures have been determined to be caused by a particular transponder type. All other test failures reported by operators appear to be random and isolated.

The FAA concludes that continued repetitive tests on the applicable airplane models listed in AD 99–23–22 R1 are unnecessary since the corrective actions have been accomplished on all transport category airplanes identified in that AD.

In addition, the FAA has determined that the repetitive performance of the tests required by AD 99–23–22 R1 may result in increased or accelerated component wear, which could contribute to reports of incorrect airplane altitude.

### Future Rulemaking

Over 50 percent of the airplane test failures have been reported by operators to be caused by Mode ''C'' transponders. The FAA is conducting further reviews to determine whether a systematic root cause failure of that Mode ''C'' transponder exists. Based on the results of these reviews, the FAA may consider further rulemaking to address potential problems concerning the Mode ''C'' transponder.

### FAA's Determination

Because the results of the tests required by AD 99–23–22 R1 have identified and corrected the causes of the identified unsafe condition, and because repetitive performance of the test may increase or accelerate component wear and contribute to reports of incorrect airplane altitude, the FAA has determined that it is necessary to rescind AD 99–23–22 R1 to prevent operators from performing unnecessary and potentially harmful repetitive tests.

Since this action rescinds a requirement to perform unnecessary actions, it has no adverse economic impact and imposes no additional burden on any person. Therefore, notice and public procedures hereon are unnecessary, and the rescission may be made effective upon publication in the **Federal Register**.

### The Rescission

Accordingly, pursuant to the authority delegated to me by the Administrator, the Federal Aviation Administration amends part 39 of the Federal Aviation Regulations (14 CFR part 39) as follows:

## PART 39—AIRWORTHINESS DIRECTIVES

1. The authority citation for part 39 continues to read as follows:

**Authority:** 49 U.S.C. 106(g), 40113, 44701.

**§ 39.13 [Amended]**

2. Section 39.13 is amended by adding an airworthiness directive removing amendment 39–11473.

**99–23–22 R2 Transport Category Airplanes:** Amendment 39–11686. Docket No. 2000–NM–81–AD. Rescinds AD 99–23–22 R1, Amendment 39–11473.

*Applicability:* Transport category airplanes, as listed below, certificated in any category, equipped with any Mode ''C'' transponder with single Gillham code altitude input, including, but not limited to, the transponder part numbers listed below. Whether a Mode ''C'' transponder has a single Gillham code altitude input may be determined by reviewing the transponder installation instructions.

*Airplane Models*

Airbus Industrie
A300
A310
British Aerospace
BAe Avro 146–RJ
BAe ATP
Fokker
F28 Mark 0070
F28 Mark 0100

F28 Mark 1000–4000
Lockheed
L–1011 TriStar
L–188 Electra
CASA
CN–235
Dassault Aviation
Mystere Falcon 50
Mystere Falcon 900
Mystere Falcon 200
Fan Jet Falcon Series G
Boeing (MDC)
DC–10–30
DC–10–40
DC–9
DC–9–81
DC–9–82
DC–9–83
DC–9–87
Boeing 707
Boeing 727
Boeing 737
Boeing 747
Bombardier
CL–215–1A10
CL–215–6B11
CL–600–1A11
CL–600–2A12
CL–600–2B16
Gulfstream
G1159 (G–II)
G–1159A (G–III)
G–IV

Mode ''C'' Transponder Part Numbers

Rockwell Collins
622–2224–001
622–2224–003
522–2703–001
522–2703–011
787–6211–001
787–6211–002
Bendix
066–1056–00
066–1056–01
066–1123–00
2041599–6508
Wilcox
97637–201
97637–301
IFF
APX–100
APX–101

This rescission is effective April 20, 2000.

Issued in Renton, Washington, on April 7, 2000.

**Donald L. Riggin,**

*Acting Manager, Transport Airplane Directorate, Aircraft Certification Service.*

[FR Doc. 00–9247 Filed 4–19–00; 8:45 am]

BILLING CODE 4910–13–U

## DEPARTMENT OF TRANSPORTATION

## Federal Aviation Administration

## 14 CFR Part 39

**[Docket No. 2000–NM–97–AD; Amendment 39–11689; AD 2000–08–03]**

**RIN 2120–AA64**

## Airworthiness Directives; McDonnell Douglas Model MD–11 Series Airplanes

**AGENCY:** Federal Aviation Administration, DOT.

**ACTION:** Final rule; request for comments.

**SUMMARY:** This amendment supersedes an existing airworthiness directive (AD), applicable to certain McDonnell Douglas Model MD–11 series airplanes, that currently requires the deactivation of the forward and center cargo control units (CCU). That amendment was prompted by a report of failure of a CCU, which produced overheating of the electrical pins inside the CCU; the subsequent release of hot gases and flames ignited an adjacent insulation blanket. This amendment expands the applicability of the existing AD to include additional airplanes. The actions specified in this AD are intended to prevent overheating of the electrical pins inside the CCU's and subsequent release of hot gases and flames, which could result in smoke and fire in the cargo compartment.

**DATES:** Effective May 5, 2000. Comments for inclusion in the Rules Docket must be received on or before June 19, 2000.

**ADDRESSES:** Submit comments in triplicate to the Federal Aviation Administration (FAA), Transport Airplane Directorate, ANM–114, Attention: Rules Docket No. 2000–NM–97–AD, 1601 Lind Avenue, SW., Renton, Washington 98055–4056.

Information pertaining to this amendment may be examined at the FAA, Transport Airplane Directorate, 1601 Lind Avenue, SW., Renton, Washington; or at the FAA, Transport Airplane Directorate, Los Angeles Aircraft Certification Office, 3960 Paramount Boulevard, Lakewood, California.

**FOR FURTHER INFORMATION CONTACT:** Brett Portwood, Aerospace Engineer, Systems and Equipment Branch, ANM–130L, FAA, Transport Airplane Directorate, Los Angeles Aircraft Certification Office, 3960 Paramount Boulevard, Lakewood, California 90712–4137; telephone (562) 627–5350; fax (562) 627–5210.

**SUPPLEMENTARY INFORMATION:** On February 28, 2000, the FAA issued AD 2000–05–01, amendment 39–11610 (65 FR 11459, March 3, 2000), applicable to certain McDonnell Douglas Model MD–11 series airplanes, to require the deactivation of the forward and center cargo control units (CCU). That action was prompted by a report of failure of a CCU, which produced overheating of the electrical pins inside the CCU; the subsequent release of hot gases and flames ignited an adjacent insulation blanket. The actions required by that AD are intended to prevent such conditions, which could result in smoke and fire in the cargo compartment.

The incident that prompted AD 2000–05–01 is not considered to be related to an accident that occurred off the coast of Nova Scotia involving a McDonnell Douglas Model MD–11 series airplane. The cause of that accident is still under investigation.

### Other Related Rulemaking

The FAA, in conjunction with Boeing and operators of Model MD–11 series airplanes, is continuing to review all aspects of the service history of those airplanes to identify potential unsafe conditions and to take appropriate corrective actions. This AD is one of a series of actions identified during that process. The process is continuing and the FAA may consider additional rulemaking actions as further results of the review become available.

### Actions Since Issuance of Previous Rule

The applicability statement of AD 2000–05–01 lists the serial numbers of the affected airplanes, which were provided by the airplane manufacturer. Since the issuance of that AD, the airplane manufacturer has informed the FAA that it inadvertently provided two incorrect airplane serial numbers (i.e., 48679 and 58563); those serial numbers do not exist. The correct serial numbers of those two airplanes are 48769 and 48563. The FAA has determined that affected airplanes having serial numbers 48769 and 48563 also are subject to the identified unsafe condition.

### Explanation of Requirements of Rule

Since an unsafe condition has been identified that is likely to exist or develop on other airplanes of this same type design, this AD supersedes AD 2000–05–01 to continue to require the deactivation of the forward and center CCU's. This AD also expands the applicability of the existing AD to include additional airplanes.

**Interim Action**

This is considered to be interim action. The FAA is currently considering requiring a modification of the CCU assembly would constitute terminating action for the requirements of this AD. However, the planned compliance time for the installation of the modification is sufficiently long so that notice and opportunity for prior public comment will be practicable.

**Determination of Rule's Effective Date**

Since a situation exists that requires the immediate adoption of this regulation, it is found that notice and opportunity for prior public comment hereon are impracticable, and that good cause exists for making this amendment effective in less than 30 days.

**Comments Invited**

Although this action is in the form of a final rule that involves requirements affecting flight safety and, thus, was not preceded by notice and an opportunity for public comment, comments are invited on this rule. Interested persons are invited to comment on this rule by submitting such written data, views, or arguments as they may desire. Communications shall identify the Rules Docket number and be submitted in triplicate to the address specified under the caption **ADDRESSES**. All communications received on or before the closing date for comments will be considered, and this rule may be amended in light of the comments received. Factual information that supports the commenter's ideas and suggestions is extremely helpful in evaluating the effectiveness of the AD action and determining whether additional rulemaking action would be needed.

Comments are specifically invited on the overall regulatory, economic, environmental, and energy aspects of the rule that might suggest a need to modify the rule. All comments submitted will be available, both before and after the closing date for comments, in the Rules Docket for examination by interested persons. A report that summarizes each FAA-public contact concerned with the substance of this AD will be filed in the Rules Docket.

Commenters wishing the FAA to acknowledge receipt of their comments submitted in response to this rule must submit a self-addressed, stamped postcard on which the following statement is made: ''Comments to Docket Number 2000–NM–97–AD.'' The postcard will be date stamped and returned to the commenter.

**Regulatory Impact**

The regulations adopted herein will not have a substantial direct effect on the States, on the relationship between the national Government and the States, or on the distribution of power and responsibilities among the various levels of government. Therefore, it is determined that this final rule does not have federalism implications under Executive Order 13132.

The FAA has determined that this regulation is an emergency regulation that must be issued immediately to correct an unsafe condition in aircraft, and that it is not a ''significant regulatory action'' under Executive Order 12866. It has been determined further that this action involves an emergency regulation under DOT Regulatory Policies and Procedures (44 FR 11034, February 26, 1979). If it is determined that this emergency regulation otherwise would be significant under DOT Regulatory Policies and Procedures, a final regulatory evaluation will be prepared and placed in the Rules Docket. A copy of it, if filed, may be obtained from the Rules Docket at the location provided under the caption **ADDRESSES**.

**List of Subjects in 14 CFR Part 39**

Air transportation, Aircraft, Aviation safety, Safety.

**Adoption of the Amendment**

Accordingly, pursuant to the authority delegated to me by the Administrator, the Federal Aviation Administration amends part 39 of the Federal Aviation Regulations (14 CFR part 39) as follows:

## PART 39—AIRWORTHINESS DIRECTIVES

1. The authority citation for part 39 continues to read as follows:

**Authority:** 49 U.S.C. 106(g), 40113, 44701.

### § 39.13 [Amended]

2. Section 39.13 is amended by removing amendment 39–11610 (65 FR 11459, March 3, 2000), and by adding a new airworthiness directive (AD), amendment 39–11689, to read as follows:

**2000–08–03 McDonnell Douglas:** Amendment 39–11689. Docket 2000–NM–97–AD. Supersedes AD 2000–05–01, Amendment 39–11610.

*Applicability:* Model MD–11 series airplanes, certificated in any category, having the serial numbers listed below.

| | | | | | |
|---|---|---|---|---|---|
| **Group 1 Airplanes:** | | | | | |
| 48565 | 48566 | 48533 | 48549 | 48470 | 48406 |
| 48504 | 48602 | 48603 | 48571 | 48439 | 48605 |
| 48572 | 48471 | 48573 | 48600 | 48601 | 48633 |
| 48513 | 48574 | 48575 | 48542 | 48543 | 48576 |
| 48415 | 48631 | 48544 | 48632 | 48577 | 48545 |
| 48578 | 48546 | 48743 | 48744 | 48747 | 48748 |
| 48745 | 48746 | 48749 | 48579 | 48766 | 48768 |
| 48767 | 48769 | 48754 | 48623 | 48770 | 48753 |
| 48773 | 48774 | 48755 | 48758 | 48775–48779 inclusive | |
| 48624 | 48756 | 48780 | 48532 | | |
| **Group 2 Airplanes:** | | | | | |
| 48555 | 48556 | 48581 | 48630 | 48557 | 48539 |
| 48558 | 48559 | 48616 | 48560 | 48617 | 48618 |
| 48561 | 48629 | 48562 | 48563 | 48757 | 48540 |
| 48564 | 48634 | 48541 | 48798 | 48781–48792 inclusive | |
| 48794 | 48799 | 48801 | 48800 | 48802–48806 inclusive | |

**Note 1:** This AD applies to each airplane identified in the preceding applicability provision, regardless of whether it has been modified, altered, or repaired in the area subject to the requirements of this AD. For airplanes that have been modified, altered, or repaired so that the performance of the requirements of this AD is affected, the owner/operator must request approval for an alternative method of compliance in accordance with paragraph (d) of this AD. The request should include an assessment of the effect of the modification, alteration, or repair on the unsafe condition addressed by this AD; and, if the unsafe condition has not been eliminated, the request should include specific proposed actions to address it.

*Compliance:* Required as indicated, unless accomplished previously.

To prevent overheating of the electrical pins inside the cargo control units (CCU) and subsequent release of hot gases and flames, which could result in smoke and fire in the cargo compartment, accomplish the following:

**Restatement of Requirements of AD 2000–05–01:**

*Deactivation*

(a) For Group 1 airplanes having serial numbers other than that identified in paragraph (c) of this AD: Within 15 days after March 20, 2000 (the effective date of AD 2000–05–01, amendment 39–11610), deactivate the forward and center CCU's in accordance with the following procedures:

(1) Remove the access panel to the forward cargo compartment CCU circuit breaker panel located at fuselage station 1009.300 (right side looking aft). Pull and collar the following circuit breakers:

B1–506
B1–485
B1–500
B1–489
B1–480
B1–495
B1–488
B1–481
B1–499
B1–487
B1–498
B1–490
B1–486
B1–482

(2) Remove the access panel to the center cargo compartment CCU circuit breaker panel located at fuselage station 1701.000 (right side looking aft). Pull and collar the following circuit breakers:

B1–552
B1–758
B1–753
B1–762
B1–518
B1–764
B1–761
B1–519
B1–752
B1–760
B1–751
B1–763
B1–759
B1–520

(b) For Group 2 airplanes having serial numbers other than that identified in paragraph (c) of this AD: Within 15 days after March 20, 2000, deactivate the forward and center CCU's in accordance with the following procedures:

(1) Remove the access panel to the forward cargo compartment CCU circuit breaker panel located at fuselage station 1009.300 (right side looking aft). Pull and collar the following circuit breakers:

B1–506
B1–485
B1–500
B1–489
B1–480
B1–495
B1–488
B1–481
B1–499
B1–487
B1–498
B1–490
B1–486
B1–482

(2) Remove the access panel to the center cargo compartment CCU circuit breaker panel located at fuselage station 1701.000 (right side looking aft). Pull and collar the following circuit breakers:

B1–552
B1–758
B1–753
B1–762
B1–518
B1–764
B1–761
B1–519
B1–752
B1–760
B1–751
B1–759
B1–520

**New Requirements of this AD:**

(c) For Group 1 airplane, serial number 48769, and for Group 2 airplane, serial number 48563: Within 15 days after the effective date of this AD, accomplish the actions specified in either paragraph (a) or (b) of this AD, as applicable.

*Alternative Methods of Compliance*

(d)(1) An alternative method of compliance or adjustment of the compliance time that provides an acceptable level of safety may be used if approved by the Manager, Los Angeles Aircraft Certification Office (ACO), FAA, Transport Airplane Directorate. Operators shall submit their requests through an appropriate FAA Principal Maintenance Inspector, who may add comments and then send it to the Manager, Los Angeles ACO.

**Note 2:** Information concerning the existence of approved alternative methods of compliance with this AD, if any, may be obtained from the Los Angeles ACO.

(2) Alternative methods of compliance, approved previously in accordance with AD 2000–05–01, amendment 39–11610, are approved as alternative methods of compliance with paragraph (a) or (b) of this AD, as applicable.

**Special Flight Permits**

(e) Special flight permits may be issued in accordance with sections 21.197 and 21.199 of the Federal Aviation Regulations (14 CFR 21.197 and 21.199) to operate the airplane to a location where the requirements of this AD can be accomplished.

(f) This amendment becomes effective on May 5, 2000.

Issued in Renton, Washington, on April 12, 2000.

**Donald L. Riggin,**

*Acting Manager, Transport Airplane Directorate, Aircraft Certification Service.*

[FR Doc. 00–9674 Filed 4–19–00; 8:45 am]

BILLING CODE 4910–13–U

---

## DEPARTMENT OF TRANSPORTATION

## Federal Aviation Administration

## 14 CFR Part 39

**[Docket No. 99–SW–69–AD; Amendment 39–11695; AD 2000–08–09]**

**RIN 2120–AA64**

## Airworthiness Directives; Robinson Helicopter Company Model R22 Helicopters

**AGENCY:** Federal Aviation Administration, DOT.

**ACTION:** Final rule; request for comments.

**SUMMARY:** This amendment adopts a new airworthiness directive (AD), applicable to Robinson Helicopter Company (RHC) Model R22 helicopters. This action requires replacing certain serial number sprag clutches with an airworthy sprag clutch as specified in this AD. This amendment is prompted by several reports of clutch assemblies with cracked or fractured sprag ends. The actions specified by this AD are intended to prevent a sprag clutch failure, loss of main rotor RPM during autorotation, and subsequent loss of control of the helicopter.

**DATES:** Effective May 5, 2000. Comments for inclusion in the Rules Docket must be received on or before June 19, 2000.

**ADDRESSES:** Submit comments in triplicate to the Federal Aviation Administration (FAA), Office of the Regional Counsel, Southwest Region, Attention: Rules Docket No. 99–SW–69–AD, 2601 Meacham Blvd., Room 663, Fort Worth, Texas 76137.

**FOR FURTHER INFORMATION CONTACT:** Elizabeth Bumann, Aviation Safety Engineer, FAA, Los Angeles Aircraft Certification Office, 3960 Paramount Blvd., Lakewood, California 90712–4137, telephone (562) 627–5265; fax (562) 627–5210.

**SUPPLEMENTARY INFORMATION:** On April 5, 1999, the FAA issued AD 99–07–17 (64 FR 17966, April 13, 1999), Amendment 39–11126, to require inserting a Special Pilot Caution into the Rotorcraft Flight Manual (RFM) to alert pilots of the potential for the sprag clutch failing to overrun during autorotation maneuvers. The Special Pilot Caution was an interim measure until the manufacturer developed a permanent corrective action. Since the sprag clutch is such a critical component of the rotor drive system, the FAA now believes that the affected sprag clutches need to be replaced within 30 days or 50 hours time-in-service (TIS), whichever occurs first. Therefore, this AD requires replacing sprag clutch, part number (P/N) A188–2, serial numbers (S/N) 3708 through 3757 inclusive, 3808 through 3893 inclusive, and 3908 through 4207 inclusive, with sprag clutch, P/N A188–2, S/N 4208 or higher. This amendment is prompted by several reports of clutch assemblies, including one from the wreckage of a helicopter, with cracked or fractured sprag ends. The actions specified by this AD are intended to prevent a sprag clutch failure, loss of main rotor RPM during autorotation, and subsequent loss of control of the helicopter.

The FAA has reviewed RHC Service Bulletin SB–85, dated March 22, 1999, which describes procedures for replacing sprag clutch, part number (P/N) A188–2, serial numbers (S/N) 3708 through 3757 inclusive, 3808 through 3893 inclusive, and 3908 through 4207 inclusive.

Since an unsafe condition has been identified that is likely to exist or develop on other Robinson R22 helicopters of the same type design, this AD is being issued to prevent a sprag clutch failure, loss of main rotor RPM during autorotation, and subsequent loss of control of the helicopter. The short compliance time involved is required because the previously described critical unsafe condition can adversely affect the controllability of the helicopter after an actual engine failure. Therefore, replacing sprag clutch, P/N A188–2, serial numbers (S/N) 3708 through 3757 inclusive, 3808 through 3893 inclusive, and 3908 through 4207 inclusive, with sprag clutch, P/N A188–2, S/N 4208 and higher, is required within 30 calendar days or 50 hours TIS after the effective date of this AD, whichever occurs first, and this AD must be issued immediately.

Since a situation exists that requires the immediate adoption of this regulation, it is found that notice and opportunity for prior public comment hereon are impracticable, and that good cause exists for making this amendment effective in less than 30 days.

The FAA estimates that 200 helicopters will be affected by this proposed AD, that it will take approximately 3 work hours to replace a sprag clutch, and that the average labor rate is $60 per work hour. Required parts will cost approximately $2,500 per helicopter. Based on these figures, the total cost impact of the AD on U.S. operators is estimated to be $536,000.

## Comments Invited

Although this action is in the form of a final rule that involves requirements affecting flight safety and, thus, was not preceded by notice and an opportunity for public comment, comments are invited on this rule. Interested persons are invited to comment on this rule by submitting such written data, views, or arguments as they may desire. Communications should identify the Rules Docket number and be submitted in triplicate to the address specified under the caption **ADDRESSES.** All communications received on or before the closing date for comments will be considered, and this rule may be amended in light of the comments received. Factual information that supports the commenter's ideas and suggestions is extremely helpful in evaluating the effectiveness of the AD action and determining whether additional rulemaking action would be needed.

Comments are specifically invited on the overall regulatory, economic, environmental, and energy aspects of the rule that might suggest a need to modify the rule. All comments submitted will be available, both before and after the closing date for comments, in the Rules Docket for examination by interested persons. A report that summarizes each FAA-public contact concerned with the substance of this AD will be filed in the Rules Docket.

Commenters wishing the FAA to acknowledge receipt of their comments submitted in response to this rule must submit a self-addressed, stamped postcard on which the following statement is made: ''Comments to Docket No. 99–SW–69–AD.'' The postcard will be date stamped and returned to the commenter.

The regulations adopted herein will not have substantial direct effects on the States, on the relationship between the national government and the States, or on the distribution of power and responsibilities among the various levels of government. Therefore, it is determined that this final rule does not have federalism implications under Executive Order 13132.

The FAA has determined that this regulation is an emergency regulation that must be issued immediately to correct an unsafe condition in aircraft, and that it is not a ''significant regulatory action'' under Executive Order 12866. It has been determined further that this action involves an emergency regulation under DOT Regulatory Policies and Procedures (44 FR 11034, February 26, 1979). If it is determined that this emergency regulation otherwise would be significant under DOT Regulatory Policies and Procedures, a final regulatory evaluation will be prepared and placed in the Rules Docket. A copy of it, if filed, may be obtained from the Rules Docket at the location provided under the caption **ADDRESSES.**

## List of Subjects in 14 CFR Part 39

Air transportation, Aircraft, Aviation safety, Safety.

## Adoption of the Amendment

Accordingly, pursuant to the authority delegated to me by the Administrator, the Federal Aviation Administration amends part 39 of the Federal Aviation Regulations (14 CFR part 39) as follows:

## PART 39—AIRWORTHINESS DIRECTIVES

1. The authority citation for part 39 continues to read as follows:

**Authority:** 49 U.S.C. 106(g), 40113, 44701.

### § 39.13 [Amended]

2. Section 39.13 is amended by adding a new airworthiness directive (AD) to read as follows:

**AD 2000–08–09 Robinson Helicopter Company:** Amendment 39–11695. Docket No. 99–SW–69–AD.

*Applicability:* Model R22 Helicopters, serial numbers (S/N) 0002 through 2862, inclusive, with sprag clutch, part number (P/N) A188–2, S/N 3708 through 3757 inclusive, 3808 through 3893 inclusive, and 3908 through 4207 inclusive, installed, certificated in any category.

**Note 1:** This AD applies to each helicopter identified in the preceding applicability provision, regardless of whether it has been otherwise modified, altered, or repaired in the area subject to the requirements of this AD. For helicopters that have been modified, altered, or repaired so that the performance of the requirements of this AD is affected, the owner/operator must request approval for an alternative method of compliance in accordance with paragraph (c) of this AD. The request should include an assessment of the effect of the modification, alteration, or repair on the unsafe condition addressed by this AD; and if the unsafe condition has not been eliminated, the request should include specific proposed actions to address it.

*Compliance:* Required within 30 calendar days or 50 hours time-in-service, whichever occurs first, unless accomplished previously.

To prevent sprag clutch failure, loss of main rotor RPM during autorotation, and subsequent loss of control of the helicopter, accomplish the following:

(a) Replace sprag clutch, P/N A188–2, S/N 3708 through 3757 inclusive, 3808 through 3893 inclusive, and 3908 through 4207 inclusive, with sprag clutch, P/N A188–2, S/N 4208 or higher.

(b) Remove from the Rotorcraft Flight Manual the Special Pilot Caution, revised March 22, 1999, contained in Robinson Helicopter Company R22 Service Bulletin SB–85, dated March 22, 1999, or the Special Pilot Caution insert in the Normal Procedures Section of the Rotorcraft Flight Manual between pages P.4–8 and P.4–9 required by AD 99–07–17, Docket No. 99–SW–24–AD, Amendment 39–11126 (64 FR 17966, April 13, 1999), as applicable.

(c) An alternative method of compliance or adjustment of the compliance time that provides an acceptable level of safety may be used if approved by the Manager, Los Angeles Aircraft Certification Office. Operators shall submit their requests through an FAA Principal Maintenance Inspector, who may concur or comment and then send it to the Manager, Los Angeles Aircraft Certification Office.

**Note 2:** Information concerning the existence of approved alternative methods of compliance with this AD, if any, may be obtained from the Los Angeles Aircraft Certification Office.

(d) Special flight permits may be issued in accordance with sections 21.197 and 21.199 of the Federal Aviation Regulations (14 CFR 21.197 and 21.199) to operate the helicopter to a location where the requirements of this AD can be accomplished.

(e) This amendment becomes effective on May 5, 2000.

Issued in Fort Worth, Texas, on April 13, 2000.

**Eric Bries,**

*Acting Manager, Rotorcraft Directorate, Aircraft Certification Service.*

[FR Doc. 00–9897 Filed 4–19–00; 8:45 am]

BILLING CODE 4910–13–P

## DEPARTMENT OF THE TREASURY

## Customs Service

## 19 CFR Part 101

**[T.D. 00–27]**

## Technical Correction; Description of Gramercy, Louisiana, Boundaries

**AGENCY:** U.S. Customs Service, Department of the Treasury.

**ACTION:** Final rule.

**SUMMARY:** This document amends the Customs Regulations pertaining to the field organization of Customs by correcting the boundary description of Gramercy, Louisiana.

**EFFECTIVE DATE:** April 20, 2000.

**FOR FURTHER INFORMATION CONTACT:** Harold Singer, Chief, Regulations Branch, U.S. Customs Service, 202–927–2268.

**SUPPLEMENTARY INFORMATION:**

### Background

Customs established a port of entry of Gramercy, Louisiana, by a final rule document published as Treasury Decision (T.D.) 82–93 in the **Federal Register** (47 FR 21039) on May 17, 1982. A description of the port of entry was set forth in the document.

On May 31, 1984, Customs published in the **Federal Register** (49 FR 22629) T.D. 84–126, a final rule document setting forth the port limits of all the ports in the then New Orleans Customs district. One of the ports, of which the boundaries were described, was Gramercy, Louisiana. The document extended the limits of the Gramercy port from those set forth in T. D. 82–93.

In a document published in the **Federal Register** (49 FR 27142) on July 2, 1984, Customs delayed the effective date of T.D. 84–126 regarding the extension of the port boundaries of Gramercy. This document stated that ''[t]he listing for Gramercy shall remain as set forth in section 101.3(b), Customs Regulations,'' meaning that the description of the Gramercy port would continue to be as set forth in T.D. 82–93.

The Customs Regulations correctly reflected that the port limits of Gramercy were as set forth in T.D. 82–93 until T.D. 95–77 was published in the **Federal Register** (60 FR 50008) on September 27, 1995. In that document, which included a revision of section 101.3 to reflect the reorganization of Customs, the reference to T.D. 84–126 was inadvertently inserted in the ''Limits of port '' column next to the listing of the port of entry of Gramercy under the State of Louisiana.

This document corrects the error by removing the reference ''(Restated in T.D. 84–126)'' in the ''Limits of port'' column adjacent to the entry of Gramercy in the ''Ports of entry column'' under the State of Louisiana in section 101.3(b), Customs Regulations.

### Inapplicability of Public Notice and Comment and Delayed Effective Date

Because this document relates to agency organization and management and merely corrects the geographical description of a port, it is not subject to the notice and public procedure requirements of 5 U.S.C. 553. For the same reasons, pursuant to 5 U.S.C. 553(d)(3), a delayed effective date is not required.

### Regulatory Flexibiilty Act

Because this document is not subject to the notice and public procedure requirements of 5 U.S.C. 553, this document is not subject to the provisions of the Regulatory Flexibility Act (5 U.S.C. 601 *et seq.*).

### Executive Order 12866

Agency organization matters are exempt from consideration under Executive Order 12866.

### Drafting Information

The principal author of this document was Janet L. Johnson. However, personnel from other offices participated in its development.

### List of Subjects in 19 CFR Part 101

Customs duties and inspection, Customs ports of entry, Exports, Imports, Organization and functions (Government agencies).

### Amendment to the Regulations

Accordingly, Part 101 of the Customs Regulations is amended as set forth below.

## PART 101—GENERAL PROVISIONS

1. The general authority citation for Part 101 and the specific authority citation for § 101.3 continue to read as follows:

**Authority:** 5 U.S.C. 301, 19 U.S.C. 2, 66, 1202 (General Note 20, Harmonized Tariff Schedule of the United States), 1623, 1624.

Sections 101.3 and 101.4 also issued under 19 U.S.C. 1 and 58b;

* * * * *

**§ 101.3 [Amended]**

2. The list of ports in § 101.3(b)(1) is amended, under the State of Louisiana in the entry for Gramercy, by removing in the ''Limits of port'' column the words ''(Restated in T.D. 84–126).''

Dated: April 14, 2000.

**Stuart P. Seidel,**

*Assistant Commissioner, Office of Regulations and Rulings.*

[FR Doc. 00–9868 Filed 4–19–00; 8:45 am]

BILLING CODE 4820–02–P

## DEPARTMENT OF JUSTICE

## 28 CFR Part 16

**[AAG/A Order No. 196–2000]**

## Privacy Act of 1974; Implementation

**AGENCY:** Department of Justice.

**ACTION:** Final rule.

**SUMMARY:** The Department of Justice is exempting a Privacy Act system of records from subsections (c)(3) and (4); (d); (e)(1), (2), (3), (5), and (8); and (g) of the Privacy Act. 5 U.S.C. 552a. This system of records is maintained by the Immigration and Naturalization Service (INS) and is entitled ''Attorney/Representative Complaint/Petitiion Files, JUSTICE/INS–022.''

Information in this system relates to complaints filed against nonagency attorneys and/or representatives who have engaged in unethical or unprofessional activities. The exemptions are necessary to avoid interference during the conduct of criminal, civil, or administrative actions or investigations. Specifically, the exemptions are necessary to prevent subjects of investigations from frustrating the investigatory process. The exemptions are necessary to avoid interference during the conduct of civil or administrative actions or investigations.

**EFFECTIVE DATE:** April 20, 2000.

**FOR FURTHER INFORMATION CONTACT:** Mary Cahill—202–307–1823.

**SUPPLEMENTARY INFORMATION:** On December 16, 1999 (64 FR 70203) a proposed rule was published in the **Federal Register** with an invitation to comment. No comments were received.

This order relates to individuals rather than small business entities. Nevertheless, pursuant to the requirements of the Regulatory Flexibility Act, 5 U.S.C. 601–612, it is hereby stated that the order will not have ''a significant economic impact on a substantial number of small entities.''

**List of Subjects in 28 CFR Part 16**

Administrative Practices and Procedures, Courts, Freedom of Information Act, Government in the Sunshine Act, and the Privacy Act.

Dated: April 5, 2000.

**Stephen R. Colgate,**

*Assistant Attorney General for Administration.*

Pursuant to the authority vested in the Attorney General by 5 U.S.C. 552a and delegated to me by Attorney General Order No. 793–78, 28 CFR part 16 is amended as follows:

## PART 16—[AMENDED]

1. The authority for Part 16 continues to read as follows:

**Authority:** 5 U.S.C. 301, 552, 552a, 552b(g), 553; 18 U.S.C. 4203(a)(1); 28 U.S.C. 509, 510, 534, 31 U.S.C. 3717, 9701.

2. 28 CFR 16.99 is amended by adding paragraphs (k) and (l) to read as follows:

**§ 16.99 Exemption of the Immigration and Naturalization Service Systems-limited access.**

* * * * *

(k) The Attorney/Representative Complaint/Petition File (JUSTICE/INS–022) system of records is exempt under the provisions of 5 U.S.C. 552a (j)(2) from subsections (c)(3) and (4); (d); (e)(1), (2), (3), (5), and (8); and (g); but only to the extent that this system contains records within the scope of subsection (j)(2), and to the extent that records in this system are subject to exemption therefrom. In addition, this system of records is also exempt in part under the provisions of 5 U.S.C. 552a (k)(2) from subsections (c)(3); (d); and (e)(1), but only to the extent that this system contains records within the scope of subsection (k)(2), and to the extent that records in this system are subject to exemption therefrom.

(l) The following justifications apply to the exemptions from particular subsections:

(1) From subsection (c)(3) for reasons stated in paragraph (h)(1) of this section.

(2) From subsection (c)(4) for reasons stated in paragraph (h)(2) of this section.

(3) From the access and amendment provisions of subsection (d) for reasons stated in paragraph (h)(3) of this section.

(4) From subsection (e)(1) for reasons stated in paragraph (h)(4) of this section.

(5) From subsection (e)(2) for reasons stated in paragraph (h)(5) of this section.

(6) From subsection (e)(3) for reasons stated in paragraph (h)(6) of this section.

(7) From subsection (e)(5) for reasons stated in paragraph (h)(7) of this section.

(8) From subsection (e)(8) for reasons stated in paragraph (h)(8) of this section.

(9) From subsection (g) to the extent that the system is exempt from the access and amendment provisions of subsection (d).

[FR Doc. 00–9744 Filed 4–19–00; 8:45 am]

BILLING CODE 4410–CJ–M

## DEPARTMENT OF JUSTICE

## 28 CFR Part 16

**[AAG/A Order No. 197–2000]**

## Privacy Act of 1974; Implementation

**AGENCY:** Department of Justice.

**ACTION:** Final rule.

**SUMMARY:** The Department of Justice is exempting a Privacy Act system of records from subsections (c)(3) and (4); (d); (e)(1), (2), (3), (5), and (8); and (g) of the Privacy Act, 5 U.S.C. 552a. This system of records is maintained by the Immigration and Naturalization Service (INS) and is entitled ''Worksite Enforcement Activity Record and Index (LYNX), JUSTICE/INS–025.''

Information in this system relates to an enforcement inspection or investigation pursued under the Immigration and Nationality Act, Section 274A(e), involving a specific individual employer. The exemptions are necessary to avoid interference during the conduct of criminal, civil, or administrative actions or investigations. Specifically, the exemptions are necessary to prevent subjects of investigations from frustrating the investigatory process. The exemptions are necessary to avoid interference during the conduct of civil or administrative actions or investigations.

**EFFECTIVE DATE:** April 20, 2000.

**FOR FURTHER INFORMATION CONTACT:** Mary Cahill—202–307–1823.

**SUPPLEMENTARY INFORMATION:** On December 16, 1999 (64 FR 70202) a proposed rule was published in the **Federal Register** with an invitation to comment. No comments were received.

This order relates to individuals rather than small business entities. Nevertheless, pursuant to the requirements of the Regulatory Flexibility Act, 5 U.S.C. 601–612, it is hereby stated that the order will not have ''a significant economic impact on a substantial number of small entities.''

**List of Subjects in 28 CFR Part 16**

Administrative Practices and Procedures, Courts, Freedom of

Information Act, Government in the Sunshine Act, and the Privacy Act.

Dated: April 5, 2000.

**Stephen R. Colgate,**

*Assistant Attorney General for Administration.*

Pursuant to the authority vested in the Attorney General by 5 U.S.C. 552a and delegated to me by Attorney General Order No. 793–78, 28 CFR part 16 is amended as follows:

## PART 16—[AMENDED]

1. The authority for part 16 continues to read as follows:

**Authority:** 5 U.S.C. 301, 552, 552a, 552b(g), 553; 18 U.S.C. 4203(a)(1); 28 U.S.C. 509, 510, 534; 31 U.S.C. 3717, 9701.

2. 28 CFR 16.99 is amended by adding paragraphs (m) and (n) to read as follows:

### § 16.99 Exemption of the Immigration and Naturalization Service Systems limited access.

* * * * *

(m) The Worksite Enforcement Activity and Records Index (LYNX) (JUSTICE/INS–025) system of records is exempt under the provisions of 5 U.S.C. 552a (j)(2) from subsections (c)(3) and (4); (d); (e)(1), (2), (3), (5), and (8); and (g); but only to the extent that this system contains records within the scope of subsection (j)(2), and to the extent that records in this system are subject to exemption therefrom. In addition, this system of records is also exempt in part under the provisions of 5 U.S.C. 552a(k)(2) from subsections (c)(3); (d); and (e)(1), but only to the extent that this system contains records within the scope of subsection (k)(2), and to the extent that records in this system are subject to exemption therefrom.

(n) The following justifications apply to the exemptions from particular subsections:

(1) From subsection (c)(3) for reasons started in paragraph (h)(1) of this section.

(2) From subsection (c)(4) for reasons stated in paragraph (h)(2) of this section.

(3) From the access and amendment provisions of subsection (d) for reasons sated in paragraph (h)(3) of this section.

(4) From subsection (e)(1) for reasons stated in paragraph (h)(4) of this section.

(5) From subsection (e)(2) for reasons stated in paragraph (h)(5) of this section.

(6) From subsection (e)(3) for reasons stated in paragraph (h)(6) of this section.

(7) From subsection (e)(5) for reasons stated in paragraph (h)(7) of this section.

(8) From subsection (e)(8) for reasons stated in paragraph (h)(8) of this section.

(9) From subsection (g) to the extent that the system is exempt from the access and amendment provisions of subsection (d).

[FR Doc. 00–9745 Filed 4–19–00; 8:45 am]

BILLING CODE 4410–CJ–M

## DEPARTMENT OF LABOR

## Office of Labor-Management Standards

## 29 CFR Part 403

**RIN 1215–AB29**

## Labor Organization Annual Financial Reports

**AGENCY:** Office of Labor-Management Standards, Employment Standards Administration, Labor.

**ACTION:** Final rule; correction.

**SUMMARY:** This document contains corrections to information contained in the final rule published on December 21, 1999 (64 FR 71622). That final rule made several technical changes to the annual financial reporting forms filed by labor organizations and to the Department of Labor's regulations in which the reporting forms are prescribed.

**EFFECTIVE DATE:** January 1, 2000.

**FOR FURTHER INFORMATION CONTACT:** Kay H. Oshel, Chief, Division of Interpretations and Standards, Office of Labor-Management Standards, Employment Standards Administration, U.S. Department of Labor, Room N–5605, Washington, DC 20210, (202) 693–0123 (this is not a toll-free number).

**SUPPLEMENTARY INFORMATION:** The final rule that is the subject of this correction made a number of minor and technical changes to the annual financial reporting forms filed by labor organizations under the Labor-Management Reporting and Disclosure Act of 1959, as amended (Forms LM–2, LM–3, and LM–4), and to the regulations in which the reporting forms are prescribed, 29 CFR part 403. The annual financial reports are also filed by federal sector labor organizations pursuant to the regulations implementing the standards of conduct provisions of the Civil Service Reform Act of 1978, 5 U.S.C. 7120, and the Foreign Service Act of 1980, 22 U.S.C. 1017. The purposes of the final rule were to (1) give notice that the Department has redesigned the reporting forms so that they can be optically scanned and made available on the Internet, and (2) revise the Department's regulations accordingly.

Two inadvertent errors were made in the ''Supplementary Information'' portion of the final rule of December 21, 1999. First, in describing the impact of the effective date of January 1, 2000 on the reporting requirements, it was incorrectly stated (on page 71623, in the first paragraph of the first column) that ''labor organizations will file the new reporting forms and format for fiscal years beginning on and after January 1, 2000.'' However, the effective date of January 1, 2000 means that the newly redesigned reporting forms are to be used by labor organizations for fiscal years ending on and after January 1, 2000 rather than for fiscal years beginning on and after January 1, 2000. Thus, for example, for a labor organization whose fiscal year ends March 31, 2000, the annual financial report is due 90 days thereafter (June 29, 2000) using the newly redesigned reporting forms.

The second inadvertent error in the ''Supplementary Information'' portion of the final rule is that the number of pages in the old and the redesigned Form LM–3 were incorrectly stated (on page 71622, in the second full paragraph of the second column). Form LM–3 had been two pages (not four), and is now four pages (not eight).

There were also two errors in the text of the revised regulation, 29 CFR 403.4(b), which deals with the simplified format which a parent body may use to fulfill the reporting obligation of its subordinate local labor organizations which have no assets, liabilities, receipts, or disbursements. On page 71624, in the third line of the penultimate paragraph of the second column, the reference to ''29 CFR 403.4(b)(3) (i)–(vi)'' should have been to ''29 CFR 403.4(b)(3) (i)–(v)''. Finally, in the ninth line of that paragraph the word ''and'' should have been inserted before ''(v)''.

### Need for Correction

As published, the final rule inadvertently contains incorrect information which needs to be corrected.

### Publication in Final

The undersigned has determined that this rulemaking need not be published as a proposed rule, as generally required by the Administrative Procedure Act (APA), 5 U.S.C. 553. This rulemaking makes technical and nonsubstantive corrections and imposes no additional burden on the public. Consequently, there is good cause for finding that notice and public procedure is unnecessary and contrary to the public

interest, pursuant to section 553(b)(B) of the APA.

**Effective Date**

The undersigned has determined that good cause exists for waiving the customary requirement for delay in the effective date of a final rule for 30 days following its publication since this rule makes technical and minor corrections to a final rule which is already in effect. See 5 U.S.C. 553(d). Therefore, this final rule correction is effective on the same date as the final rule which is being corrected, January 1, 2000.

**Administrative Requirements**

*A. Executive Order 12866*

The Department of Labor has determined that this rule is not a significant regulatory action as defined in section 3(f) of Executive Order 12866 in that it will not (1) have an annual effect on the economy of $100 million or more, or adversely affect in a material way the economy, a sector of the economy, productivity, competition, jobs, the environment, public health or safety, or State, local, or tribal governments or communities, (2) create a serious inconsistency or otherwise interfere with an action taken or planned by another agency, (3) materially alter the budgetary impact of entitlements, grants, user fees, or loan programs or the rights and obligations of recipients thereof, or (4) raise novel legal or policy issues arising out of legal mandates, the President's priorities, or the principles set forth in Executive Order 12866.

*B. Regulatory Flexibility Act*

Because a notice of proposed rulemaking is not required for this rule under 5 U.S.C. 553(b), the requirements of the Regulatory Flexibility Act, 5 U.S.C. 601 *et seq.*, pertaining to regulatory flexibility analysis do not apply. See 5 U.S.C. 601(2). Therefore, a regulatory flexibility analysis is not required.

*C. Paperwork Reduction Act*

This rule contains no additional information collection requirements. The information collection requirements in the regulations to which this rule makes technical corrections have been approved by the Office of Management and Budget (OMB control number 1215–0188).

*D. Small Business Regulatory Enforcement Fairness Act*

The Department has determined that this final rule is not a ''major rule'' requiring prior approval by the Congress and the President pursuant to the Small Business Regulatory Enforcement Fairness Act of 1996 (5 U.S.C. 804), because it is not likely to result in (1) an annual effect on the economy of $100 million or more, (2) a major increase in costs or prices for consumers, individual industries, Federal, State, or local government agencies, or geographic regions, or (3) significant adverse effects on competition, employment, investment, productivity, innovation, or the ability of United States-based enterprises to compete with foreign-based enterprises in domestic and export markets.

Further, since the Department has determined, for good cause, that publication of a proposed rule and solicitation of comments on this rule is not necessary, under 5 U.S.C. 808(2), this final rule is effective as of the date of the final rule which is being corrected, January 1, 2000, as stated previously in this notice.

*E. Unfunded Mandates Reform Act*

For purposes of Section 2 of the Unfunded Mandates Reform Act of 1995, 2 U.S.C. 1532, as well as Executive Order 12875 (58 FR 58093, October 28, 1993), this rule does not include any federal mandate that may result in increased expenditures by State, local and tribal governments, or increased expenditures by the private sector of more than $100 million.

*F. Federalism*

The Department has reviewed this rule in accordance with Executive Order 13132 regarding federalism, and has determined that it does not have ''federalism implications.'' The rule does not ''have substantial direct effects on the States, on the relationship between the national government and the States, or on the distribution of power and responsibilities among the various levels of government.''

**List of Subjects in 29 CFR Part 403**

Labor unions, Reporting and recordkeeping requirements.

**Correction of Publication**

Accordingly, the publication on December 21, 1999 of the final rule which was the subject of FR Doc. 99–33044, is corrected as follows:

1. On page 71622, in the second full paragraph that begins in the second column, the phrase ''eight pages instead of four for Form LM–3'' is corrected to read ''four pages instead of two for Form LM–3.''

2. On page 71623, in the first paragraph of the first column, the phrase ''labor organizations will file the new reporting forms and format for fiscal years beginning on and after January 1, 2000'' is corrected to read ''labor organizations will file the new reporting forms and format for fiscal years ending on and after January 1, 2000.''

**§ 403.4 [Corrected]**

3. On page 71624, in the second column, in the third line of the paragraph which begins ''Each document attached * * *'', the reference to ''29 CFR 403.4(b)(3) (i)–(vi)'' is corrected to read ''29 CFR 403.4(b)(3) (i)–(v)''.

4. On page 71624, in the second column, in the ninth line of the paragraph which begins ''Each document attached * * *'', the word ''and'' is inserted after ''period;'' and before ''(v)''.

Signed in Washington, DC this 14th day of April, 2000.

**Bernard E. Anderson,**

*Assistant Secretary for Employment Standards.*

[FR Doc. 00–9911 Filed 4–19–00; 8:45 am]

BILLING CODE 4510–46–P

---

## DEPARTMENT OF TRANSPORTATION

## Coast Guard

## 33 CFR Part 100

**[CGD–00–119]**

**RIN 2115–AE46**

## Special Local Regulation: Harvard-Yale Regatta, Thames River, New London, CT

**AGENCY:** Coast Guard, DOT.

**ACTION:** Notice of implementation.

**SUMMARY:** This notice puts into effect the permanent regulations for the annual Harvard-Yale Regatta, a rowing competition held on the Thames River in New London, CT. The regulation is necessary to control vessel traffic within the immediate vicinity of the event due to the confined nature of the waterway and anticipated congesttion at the time of the event, thus providing for the safety of life and property on the affected navigable waters.

**DATE:** The regulations in 33 CFR 100.101 are effective on June 10, 2000, from 2:30 p.m. to 8 p.m. If the regatta is cancelled due to weather, this section will be in effect on the following day, Sunday June 11, 2000, from 2:30 p.m. to 8 p.m.

**FOR FURTHER INFORMATION CONTACT:** Petty Officer William M. Anderson, Office of Search and Rescue, First Coast Guard District, (617) 223–8460.

**SUPPLEMENTARY INFORMATION:** This notice implements the permanent special local regulation governing the 2000 Harvard-Yale Regatta. A portion of the Thames River in New London, Connecticut will be closed during the effective period to all vessel traffic except participants, official regatta vessels, and patrol craft. The regulated area is that area of the river between the Penn Central drawbridge and Bartlett's Cove. Additional public notification will be made via the First Coast Guard District Local Notice to Mariners and marine safety broadcasts. The full text of this regulation is found in 33 CFR 100.101.

Dated: March 28, 2000.

**G.N. Naccara,**

*Rear Admiral, U.S. Coast Guard Commander, First Coast Guard District.*

[FR Doc. 00–9935 Filed 4–19–00; 8:45 am]

**BILLING CODE 4910–15–M**

---

## DEPARTMENT OF TRANSPORTATION

## Coast Guard

## 33 CFR Part 165

**[CGD01–00–120]**

**RIN 2115–AA97**

## Safety Zone: Sunken Vessel JESSICA ANN, Cape Elizabeth, ME

**AGENCY:** Coast Guard, DOT.

**ACTION:** Temporary final rule.

**SUMMARY:** The Coast Guard is establishing a safety zone encompassing those waters of the Atlantic Ocean within 1,000 yards of the position 43°31′9″ N, 070°11′8″ W and from the water's surface to the seabed floor. This rule is necessary to protect the environment from a diesel fuel spill which may occur from the disturbance of the sunken vessel F/V Jessica Ann, the commercial fishery, and the general public for the hazards associated with the recovery of diesel fuel from a sunken vessel.

**EFFECTIVE DATE:** This section is effective on April 4, 2000 until July 1, 2000.

**FOR FURTHER INFORMATION CONTACT:** Lieutenant R. V. Timme, Chief of Response and Planning, Captain of the Port, Portland at (207) 780–3251.

**SUPPLEMENTARY INFORMATION:**

### Regulatory History

As authorized by 5 U.S.C. 553, a notice of proposed rulemaking (NPRM) was not published for this regulation. Under 5 U.S.C 553(b)(B), the Coast Guard finds that good cause exists for not publishing an NPRM and for making this rule effective less that 30 days after publication in the **Federal Register**. Due to inclement weather conditions, recovery of the diesel fuel on board the F/V Jessica Ann must be postponed. Any delay in implementing this rule would be contrary to the public interest since immediate action is necessary to protect the environment from an oil spill which may occur from inadvertent or intentional disturbance of the wreckage prior to the time that the oil spill recovery operations are possible, and to protect the maritime public from the hazards associated with recovery operations.

On February 20, 2000, The F/V Jessica Ann sunk in 136 feet of water in the Atlantic Ocean. It is estimated that approximately 10,000 gallons of diesel fuel is on board the vessel. Clean Harbors, Inc. was hired for the clean up and recovery of fuel on board the F/V Jessica Ann. The fuel vents on the vessel were sealed to secure the leak. However, due to inclement weather, fuel recovery has been postponed until favorable weather conditions prevail. The safety zone will be effective on April 4, 2000 until July 1, 2000, Cape Elizabeth, Maine. This regulation establishes a safety zone encompassing those waters of the Atlantic Ocean within 1,000 yards of the position 43°31′9″ N, 070°11′8″ and from the water's surface to the seabed floor. The safety zone will be cancelled following the recovery of the oil remaining on board. This rule is necessary to protect the environment, the commercial fishery, and the general public. Innocent transit through the area within the safety zone is not affected by this regulation and does not require the authorization of the Captain of the Port.

### Regulatory Evaluation

This temporary final rule is not a significant regulatory action under section 3(f) of Executive Order 12866 and does not require an assessment of potential costs and benefits under section 6(a)(3) of that order. It has not been reviewed by the Office of Management and Budget under that order. It is not significant under the regulatory policies and procedures of the Department of Transportation (DOT) (44 FR 11040; February 26, 1979). The Coast Guard expects the economic impact of this proposal to be so minimal that a full Regulatory Evaluation under paragraph 10e of the regulatory policies and procedures of DOT is unnecessary. This conclusion is based on the fact that the proposal has no significant effect on shipping, and its impact on fishing is minimal as it removes a small portion (less than one square mile) of the available fishing grounds from active fishing.

### Small Entities

Under the Regulatory Flexibility Act (5 U.S.C. 601 *et seq.*), the Coast Guard must consider whether this proposal will have a significant economic impact on a substantial number of small entities. ''Small entities'' may include (1) small businesses and not-for-profit organizations that are independently owned and operated and are not dominant in their fields and (2) governmental jurisdictions with populations of less than 50,000.

For the reasons addressed under the Regulatory Evaluation above, the Coast Guard expects the impact of this regulation to be minimal and certifies under section 605(b) of the Regulatory Flexibility Act (5 U.S.C. 601 *et seq.*) that this final rule will not have a significant economic impact on substantial number of small entities.

This rule will affect the following entities, some of which may be small entities: The commercial fishing community intending to fish portions of Cape Elizabeth restricted by the safety zone.

### Collection of Information

This rule contains no collection of information requirements under the Paperwork Reduction Act (44 U.S.C. 3501 *et seq.*).

### Federalism

The Coast Guard has analyzed this rule under the principles and criteria contained in Executive Order 113132 and have determined that this rule does not have sufficient federalism implications for Federalism under that order.

### Unfunded Mandates Reform Act

The Unfunded Mandates Reform Act of 1995 (2 U.S.C. 1531–1538) governs the issuance of Federal regulations that require unfunded mandates. An Unfunded Mandate is a regulation that requires a state, local or tribal government or the private sector to incur costs without the Federal government's having first provided the funds to pay those costs. This rule will not impose an Unfunded Mandate.

### Taking of Private Property

This rule will not effect a taking of private property or otherwise have taking implications under E.O. 12630, Governmental Actions and Interference with Constitutionally Protected Property Rights.

**Civil Justice Reform**

This rule meets applicable standards in section 3(a) and 3(b)(2) of E.O. 12988, Civil Justice Reform, to minimize litigation, eliminate ambiguity and reduce burden.

**Protection of Children**

The Coast Guard has analyzed this rule under E.O. 13045, Protection of Children from Environmental Health Risks and Safety Risks. This rule is not an economically significant rule and does not concern an environmental risk to health or risk to safety that may disproportionately affect children.

**Environment**

The Coast Guard has considered the environmental impact of this regulation and concluded that, under Figure 2–1, paragraph 34(g) of Commandant Instruction M16475.1C, this rule is categorically excluded from further environmental documentation. A Categorical Exclusion Determination and an Environmental Analysis Checklist is available in the docket for inspection or copying.

**List of Subjects in 33 CFR Part 165**

Harbors, Marine safety, Navigation (water), Reporting and recordkeeping requirements, Security measures, Waterways.

**Regulation**

For the reasons set out in the preamble, the Coast Guard amends 33 CFR Part 165 as follows:

1. The authority citation for Part 165 continues to read as follows:

**Authority:** 33 U.S.C. 1231; 50 U.S.C. 191; 33 CFR 1.05–1(g), 6.04–1, 6.04–6 and 160.5; 49 CFR 1.46.

2. Add temporary section, § 165.T01–120, to read as follows:

**§ 165.T01–120; Sunken Vessel JESSICA ANN, Cape Elizabeth, ME.**

(a) *Location:* The following is a safety zone: encompassing those waters of the Atlantic Ocean within 1,000 yards of the position 43°31′9″ N, 070°11′8″ of the F/V Jessica Ann and from the water's surface to the seabed floor, Cape Elizabeth, ME.

(b) *Effective date:* April 4, 2000 until July 1, 2000.

(c) *Regulations:* (1) The general regulations contained in § 165.23 and the regulations specifically relating to safety zones in § 165.20 of this part apply.

(2) All vessels and persons are prohibited from anchoring, diving, dredging, dumping, fishing, trawling, laying cable, or conducting salvage operations in this zone except as authorized by the Coast Guard Captain of Port, Portland, Maine. Innocent transit through the area within the safety zone is not affected by this regulation and does not require the authorization of the Captain of the Port.

(3) All persons and vessels shall comply with the instructions of the Coast Guard Captain of the Port or the designated on scene patrol personnel. U.S. Coast Guard patrol personnel include commissioned, warrant and petty officers of the Coast Guard. Upon being hailed by a U.S. Coast Guard vessel via siren, radio, flashing light, or other means, the operator of the vessel shall proceed as directed.

Dated: April 4, 2000.

**J. E. Cameron,**

*Lieutenant Commander, U.S. Coast Guard Acting, Captain of the Port.*

[FR Doc. 00–9840 Filed 4–19–00; 8:45 am]

BILLING CODE 4910–15–P

# Proposed Rules

Federal Register
Vol. 65, No. 77
Thursday, April 20, 2000

This section of the FEDERAL REGISTER contains notices to the public of the proposed issuance of rules and regulations. The purpose of these notices is to give interested persons an opportunity to participate in the rule making prior to the adoption of the final rules.

## DEPARTMENT OF AGRICULTURE

### Federal Crop Insurance Corporation

### 7 CFR Part 457

**RIN 0563–AB63**

### Common Crop Insurance Regulations; Small Grains Crop Insurance Provisions and Wheat Crop Insurance Winter Coverage Endorsement

**AGENCY:** Federal Crop Insurance Corporation, USDA.

**ACTION:** Proposed rule with request for comments.

**SUMMARY:** The Federal Crop Insurance Corporation (FCIC) proposes to amend the Small Grains Crop Insurance Provisions and the Wheat Crop Insurance Winter Coverage Endorsement. The intended effects of this action are to add provisions for the insurance of Kamut and buckwheat, include additional insurance benefits, clarify existing policy provisions to better meet the needs of the insured, improve actuarial soundness, and restrict the effect of the current Small Grains Crop Insurance Provisions and the Wheat Crop Insurance Winter Coverage Endorsement to the 2000 and prior crop years.

**DATES:** Written comments and opinions on this proposed rule will be accepted until close of business June 19, 2000 and will be considered when the rule is to be made final. Comments on the information collection requirements must be received on or before June 19, 2000.

**ADDRESSES:** Interested persons are invited to submit written comments to the Director, Product Development Division, Federal Crop Insurance Corporation, United States Department of Agriculture, 9435 Holmes Road, Kansas City, MO 64131. Comments may also be sent via the Internet to DirectorPDD@rm.fcic.usda.gov. A copy of each response will be available for public inspection and copying from 7 a.m. to 4:30 p.m., CDT, Monday through Friday, except holidays, at the above address.

**FOR FURTHER INFORMATION CONTACT:** For further information and a copy of the Cost-Benefit Analysis to the Common Crop Insurance Regulations; Small Grains Crop Insurance Provisions, contact Rob Coultis, Insurance Management Specialist, Research and Development, Product Development Division, Federal Crop Insurance Corporation, at the Kansas City, MO address listed above, telephone (816) 926–7730.

**SUPPLEMENTARY INFORMATION:**

#### Executive Order 12866

This rule has been determined to be significant for the purposes of Executive Order 12866 and, therefore, it has been reviewed by the Office of Management and Budget (OMB).

#### Cost-Benefit Analysis

A Cost-Benefit Analysis has been completed and is available to interested persons at the Kansas City address listed above. In summary, the analysis finds the effect of proposed changes on crop insurance payments is expected to be small. The greatest impacts are expected from: (1) Providing benefits when damaged winter wheat is planted to a spring crop other than wheat; (2) increasing the amount of replant payments for wheat and providing replant payments for crops that have not had them in the past; and (3) changes to the Wheat Winter Coverage Endorsement.

#### Paperwork Reduction Act of 1995

In accordance with section 3507(j) of the Paperwork Reduction Act of 1995 (44 U.S.C. 3501), the information collection and record keeping requirements included in the proposed rule have been submitted for approval to the Office of Management and Budget (OMB). Please send your written comments to the Office of Information and Regulatory Affairs, OMB, Attention: Desk Officer for RMA, Washington, D.C. 20503. A comment to OMB is best assured of having its full effect if OMB receives it within 30 days of publication of this proposed rule.

We are soliciting comments from the public concerning our proposed information collection and record keeping requirements. We need this outside input to help us:

(1) Evaluate whether the proposed collection of information is necessary for the proper performance of the functions of the agency, including whether the information has practical utility;

(2) Evaluate the accuracy of our estimate of the burden of the proposed collection of information, including the validity of the methodology and assumptions used;

(3) Enhance the quality, utility, and clarity of the information to be collected; and

(4) Minimize the burden of the collection of information on those who are to respond (such as through the use of appropriate automated, electronic, mechanical, or other technological collection techniques or other forms of information technology, e.g. permitting electronic submission responses.)

The collections of information for this rule revise the Multiple Peril Crop Insurance Collections of Information 0563–0053 which expire April 30, 2001.

*Title:* Multiple Peril Crop Insurance (Small Grains).

*Abstract:* This rule improves the existing Small Grains Crop Provisions and the Wheat Crop Insurance Winter Coverage Endorsement. The Small Grains Crop Provisions are revised to: (1) Allow insurance for Kamut (a variety of wheat) and buckwheat; (2) allow acreage initially planted to durum wheat or club wheat to qualify as a separate insurance unit; (3) specify that only one price election is applicable for each crop unless the Special Provisions provide different price elections by crop type, and that price elections and coverage levels can be changed until the spring sales closing date if the producer does not have any fall planted acreage of the insured crop; (4) change the December 31 contract change date for spring crops to November 30; (5) change all April 15 cancellation and termination dates to March 15; (6) change the cancellation and termination dates for specific counties; (7) add cancellation and termination dates for buckwheat; (8) clarify when the premium will be reduced for insured acreage that is intentionally destroyed prior to harvest; (9) specify that a malting barley endorsement is available where the actuarial table provides premium rates for such coverage; (10) clarify that the insured must replant fall planted barley or wheat that is damaged

prior to the spring final planting date with a winter type of the crop if practical, or to spring type if it is not practical to replant a winter type; (11) specify that for wheat only, in counties that have insurance for both spring and winter wheat, producers may put damaged winter wheat acreage to another use and receive a payment; (12) clarify that producers may request insurance for fall planted barley or wheat provided they do so by the spring sales closing date in counties having only a spring final planting date; (13) change the calendar date for the end of the insurance period for all small grains from October 31 to July 31 in specified states; (14) allow replanting payments for barley, oats, flax and buckwheat; (15) allow a replanting payment when the amount of seed used is less than the amount normally used for initial seeding; (16) Specify that the replant payment will be calculated in accordance with the formula in the policy regardless of the actual cost of replanting; (17) change from 3 to 4 the number of bushels used to compute the maximum amount of a replanting payment for wheat, and specify the number of bushels used to compute payments for barley, oats, flax and buckwheat; (18) specify that replanting payments will be calculated based on the price election for the crop type that is replanted and insured; (19) allow an insurance benefit for damaged winter wheat when a producer elects not to replant spring wheat and destroys any remaining winter wheat on the acreage; (20) modify calculations of indemnities to allow for situations in which there are separate crop types and more than one price election within a unit; (21) allow production to be adjusted for low quality when certain crops grade ''blighted,'' ''thin,'' ''light smutty,'' or ''light garlicky;'' (22) allow a late planting period for fall planted wheat except for that covered under the Wheat Winter Coverage Endorsement.

The Wheat Crop Insurance Winter Coverage Endorsement is revised to: (1) Clarify that the endorsement is available only if the actuarial table provides a premium rate for it; (2) specify that all eligible winter wheat acreage must be insured under the endorsement; (3) increase the coverage amount from 30 to 50 percent of the production guarantee under Option A; (4) clarify that if the insured elects to destroy the crop and plant the acreage to spring wheat, it will be insured under the policy provisions covering spring planted wheat; and (5) change the amount of coverage provided from 100 to 70 percent of the production guarantee under Option B.

*Purpose:* The purpose of this proposed rule is to add provisions for the insurance of buckwheat, include additional insurance benefits, clarify existing policy provisions to better meet the needs of the insured and the insurance company, and to improve actuarial soundness.

*Burden statement:* The information that FCIC collects on the specified forms will be used in offering crop insurance coverage, determining program eligibility, establishing a production guarantee, calculating losses qualifying for a payment, etc. The burden hours have increased because FCIC assumes more producers will obtain crop insurance coverage for their small grains. It is likely more producers will desire the increased coverage to help protect their investments against risk.

*Estimate of Burden:* We estimate that it will take insured producers, a loss adjuster, and an insurance agent an average of .8 of an hour to provide the information required by the Small Grains Crop Provisions including the wheat endorsement.

*Respondents:* Insureds, insurance agents, and loss adjusters.

*Estimated annual number of respondents:* 422,277.

*Estimated annual number of responses per respondent:* 2.5.

*Estimated annual number of responses:* 1,064,735.

*Estimated total annual burden on respondents:* The total public burden for this proposed rule is estimated at 347,691 hours.

*Record keeping requirements:* FCIC requires records of production to be kept for three years after the end of a crop year. However, these records are retained as part of the normal business practice and FCIC's requirement does not place additional burden on insured producers. Therefore, FCIC is not estimating burden related to this record keeping requirement.

**Unfunded Mandates Reform Act of 1995**

Title II of the Unfunded Mandates Reform Act of 1995 (UMRA) establishes requirements for Federal agencies to assess the effects of their regulatory actions on State, local, and tribal governments and the private sector. This rule contains no Federal mandates (under the regulatory provisions of title II of the UMRA) for State, local, and tribal governments or the private sector. Therefore, this rule is not subject to the requirements of sections 202 and 205 of UMRA.

**Executive Order 13132**

It has been determined under section 1(a) of Executive Order 13132, Federalism, that this rule does not have sufficient implications to warrant consultation with the States. The provisions contained in this rule will not have a substantial direct effect on States, or on the relationship between the national government and the States, or on the distribution of power and responsibilities among the various levels of government.

**Regulatory Flexibility Act**

This regulation will not have a significant impact on a substantial number of small entities. New provisions included in this rule will not impact small entities to a greater extent than large entities. The amount of work required of the insurance companies delivering and servicing these policies will not increase significantly from the amount of work currently required. Therefore, this action is determined to be exempt from the provisions of the Regulatory Flexibility Act (5 U.S.C. 605), and no Regulatory Flexibility Analysis was prepared.

**Federal Assistance Program**

This program is listed in the Catalog of Federal Domestic Assistance under No. 10.450.

**Executive Order 12372**

This program is not subject to the provisions of Executive Order 12372, which require intergovernmental consultation with State and local officials. See the Notice related to 7 CFR part 3015, subpart V, published at 48 FR 29115, June 24, 1983.

**Executive Order 12988**

This rule has been reviewed in accordance with Executive Order 12988 on civil justice reform. The provisions of this rule will not have a retroactive effect. The provisions of this rule will preempt State and local laws to the extent such State and local laws are inconsistent herewith. The administrative appeal provisions published at 7 CFR part 11 must be exhausted before any action against FCIC for judicial review may be brought.

**Environmental Evaluation**

This action is not expected to have a significant impact on the quality of the human environment, health, and safety. Therefore, neither an Environmental Assessment nor an Environmental Impact Statement is needed.

**Background**

FCIC proposes to amend the Common Crop Insurance Regulations (7 CFR part 457) by revising 7 CFR 457.101, ''Small grains crop insurance'' and 7 CFR 457.102, ''Wheat crop insurance winter coverage endorsement'' effective for the 2001 and succeeding crop years. The principal changes to the provisions for insuring small grains and providing winter coverage for wheat in certain counties are as follows:

7 CFR 457.101—Small Grains Crop Insurance

1. Section 1—Revise the definition of ''small grains'' to allow insurance for Kamut and buckwheat in response to industry request. Scientific names for specific small grain varieties that are insurable have also been added. Inclusion of these scientific names will help differentiate between small grain varieties that are insurable and those that are not. Also revise the definition of ''prevented planting'' to disallow a prevented planting benefit when small grains are prevented from being planted during the fall late planting period in counties that also have a spring final planting date. If the insured can plant spring wheat when he is not able to plant winter wheat, the insured is not prevented from planting wheat.

2. Section 2—Specify that initially planted durum or club wheat may qualify as a separate optional unit if the Special Provisions for the county designate durum or club wheat as a wheat type. Current provisions do not allow separate optional units for durum or club wheat. This change affords wheat producers additional flexibility in determining insurance coverage.

3. Section 3—Specify that the insured may select only one price election for each crop unless the Special Provisions provide different price elections by crop type, in which case the insured may select one price election for each crop type designated in the Special Provisions. The price election the insured selects for each crop type must have the same relationship to the maximum price offered. This simplifies administration of the program. Also, for counties with both fall and spring sales closing dates for the insured crop, this change allows the producer to change the coverage level or price election until the spring sales closing date only if the producer does not have any fall planted acreage of the insured crop.

4. Section 4—Change the December 31 contract change date for spring crops to November 30 to maintain an adequate amount of time between this date and new cancellation dates to permit the insured to make informed insurance decisions. This change is consistent with other spring crop policies.

5. Section 5—Change all April 15 cancellation and termination dates to March 15 to correspond to the change in the sales closing dates to comply with the requirement of the Federal Crop Insurance Reform Act of 1994 that spring planted crop sales closing dates be made 30 days earlier.

Change the cancellation and termination dates for Matanuska-Susitna County, Alaska from October 31 and November 30, respectively, to March 15 for wheat. Winter wheat is not adapted to the area.

Change the cancellation and termination dates from the spring (April 15) to the fall in certain counties to allow coverage for winter wheat. The cancellation date will be September 30 and the termination date will be November 30 in the following counties: Aurora, Bon Homme, Davidson, Douglas, Hanson, Harding, Hutchinson, Jerauld, Perkins, and Sanborn Counties, South Dakota; Roosevelt and Valley Counties, Montana; and Buffalo, Trempealeau, Jackson, Wood, Portage, Waupaca, Outagamie, Brown, and Kewaunee Counties, Wisconsin, and all Wisconsin counties north thereof.

Change the cancellation and termination dates for barley from April 15 to October 31 (for cancellation) and November 30 (for termination), in Humboldt and Pershing Counties, Nevada, and in Box Elder, Millard and Utah Counties, Utah. This change allows the establishment of winter barley coverage in these counties.

Add cancellation and termination date of March 15 for buckwheat in all states.

6. Section 6(b)(2)—Clarify the circumstances in which the premium will be reduced for insured acreage that is intentionally destroyed prior to harvest.

7. Section 6(d)—Provide that a malting barley endorsement is available where the actuarial table provides premium rates for such coverage.

8. Section 7(a)(1)—Revise so that insurance period provisions applicable to oats, rye and flax are also applicable to buckwheat. Buckwheat will be insurable under these crop provisions, so the insurance period provisions in this section will be amended accordingly.

9. Section 7(a)(2)(iii)—Specify that the insured must replant any fall planted barley or wheat that is damaged prior to the spring final planting date with a winter type of the crop if practical, or to spring type if it is not practical to replant a winter type. Previous provisions were not clear regarding the requirement to replant to spring wheat when it was impractical to replant a winter type. Also provide provisions for wheat only that will allow producers to put damaged winter wheat acreage to another use and receive a payment in accordance with new provisions in section 9(e). This benefit would be available only in counties with both fall and spring final planting dates. Under current provisions, if a producer elects not to replant wheat, no coverage is provided and no premium is charged (acreage is removed from the acreage report).

10. Section 7(a)(2)(v)—Clarify that in counties having only a spring final planting date, producers may request insurance for fall planted barley or wheat provided they do so by the spring sales closing date. Insurance will attach to such acreage on the date the insurer determines an adequate stand exists or on the spring final planting date if the insurer does not determine adequacy of the stand by the spring final planting date. Also clarify that after insurance begins, any such insured acreage damaged prior to the spring final planting date must be replanted if it is practical to do so.

11. Section 7(b)(4)—Change the calendar date for the end of the insurance period for all small grains from October 31 to July 31 in Alabama, Arizona, Arkansas, Connecticut, Delaware, Florida, Georgia, Kentucky, Louisiana, Maryland, Mississippi, New Jersey, North Carolina, South Carolina and Tennessee. Harvest of small grains in these states generally begins in June and ends about the middle of July.

12. Section 9—Revise to allow replanting payments for all small grains. Previous provisions allowed a replanting payment for wheat only. Also remove the requirement that replanting occur not later than 25 days after the spring final planting date. This provision is unnecessary because the provisions regarding the time for replanting are contained in the definitions of ''practical to replant'' and ''late planting period.''

13. Section 9(a)(1)—Revise to make inapplicable the Basic Provisions' limit of the amount of a replant payment to the producer's actual cost. Administrative burden associated with obtaining receipts to prove cost will be eliminated with little effect on payment amounts. Insurance providers have reported that only in rare instances is the actual cost of replanting less than the maximum payment amount allowed by the crop provisions.

14. Section 9(a)(5)—Specify which fall final planting date is to be

considered when there is more than one fall final planting date for a county. Currently damage has to occur after the fall final planting date to be eligible for a replanting payment.

15. Section 9(a)(6)—Revise to allow a replanting payment when the amount of seed used is less than the amount normally used for initial seeding. The seeding rate must be sufficient to achieve a total undamaged and new seeding plant population that will produce at least the yield used to determine the production guarantee. Allowing this payment under such circumstances will provide a greater incentive to improve poor crop stands, thereby improving production levels and reducing claims.

16. Section 9(c)—Change from three to four the number of bushels used to compute the amount of a replanting payment for wheat. Two bushels is used for flax and buckwheat, and five bushels is used for barley and oats. Average costs associated with replanting have increased substantially in recent years. These changes in the replanting payment computation better reflect actual replanting costs. Current provisions prevent the payment from being based on a production amount exceeding 20% of the production guarantee. This will protect against overpayments in areas where replanting costs may be lower.

17. Section 9(e)—Specify that replanting payments generally will be calculated based on the price election for the crop type that is replanted and insured. However, the replanting payment will be based on the price election of the type initially planted for any (1) damaged winter crop type that is replanted to a spring crop type, but retains insurance based on the winter crop type guarantee and price election; or (2) acreage replanted at a reduced seeding rate into a partially damaged stand of the insured crop.

18. Section 9(f)—Allow an insurance benefit for damaged winter wheat when a producer elects not to replant spring wheat and destroys any remaining winter wheat on the acreage. The proposed benefit is equal to 15 percent of the production guarantee for the acreage. Under current provisions, if a producer elects not to replant wheat, no coverage is provided and no premium is earned (acreage is removed from the acreage report). Additional levels of winter protection will remain available under the wheat crop insurance winter coverage endorsement.

19. Section 11(b)—Revise calculations of indemnities when there are separate crop types and more than one price election within a unit. This change is necessary because separate price elections have been established for some wheat types.

20. Section 11(c)(1)(iv)—Revise for consistency with provisions used for most other crops and to specify that in the event of a disagreement about the quantity of appraised production, the insurance provider has the option to consent to put the acreage to another use. Currently the insurance provider's consent is mandatory if the insured agrees to leave intact and care for representative samples.

21. Section 11(d)—Provide that any adjustment for excess moisture will be made before any adjustment for quality deficiencies to be consistent with other crop policies which permit both moisture and quality adjustments. Provide that buckwheat may be adjusted for excess moisture and quality deficiencies.

22. Section 11(d)(1)(iv)—Add buckwheat to the crops that are adjusted for moisture content above 16 percent.

23. Sections 11(d)(2)(i)(A) through (E)—Add musty, sour, or commercially objectionable foreign odors as factors that may qualify small grains for quality adjustment. These conditions reduce the value of production and can occur due to insured causes. Add ''blighted'' as a grade that qualifies barley for quality adjustment. This grade identifies production that has been damaged by certain levels of fungus or mold, both of which reduce the value of production and can occur due to insured causes. Add ''thin'' as a grade that qualifies oats for quality adjustment. This grade identifies production with a certain percentage of small kernels. These small kernels reduce the value of production and can occur due to insured causes such as drought. Add test weight as a factor that may qualify flaxseed for quality adjustment. Low test weight reduces the value of production and can occur due to insured causes. Add ''light smutty'' and ''light garlicky'' as grades that qualify rye for quality adjustment. These grades identify production with certain levels of smut balls or spores, or garlic bulblets, both of which reduce the value of production and can occur due to insured causes. Also clarify for wheat, barley, oats and rye, heat damaged kernels will not be considered to be damaged.

24. Section 11(d)(2)(ii)—Specify the factors that may qualify buckwheat for quality adjustment.

25. Section 11(d)(2)(iii)—Specify the factors that may qualify Kamut for quality adjustment.

26. Section 11(d)(3)—Remove the requirement that the value of damaged production be less than the local market price of U.S. No. 2 production. The quality factors will be specified for certain quality deficiency levels, so the requirement is no longer necessary.

27. Section 11(d)(4)—Requires use of discount factors for quality adjustment if provided in the Special Provisions. The use of such factors assures consistent adjustment for insureds with quality related losses. Quality adjustment factors contained in the Special Provisions are currently being used; however, the crop provisions do not specifically refer to them.

28. Section 12—Revise to allow a late planting period for all small grains, except for wheat which is covered under the wheat crop insurance winter coverage endorsement. Current provisions do not provide coverage for late planted winter wheat unless the acreage is prevented from being planted.

7 CFR 457.102—Wheat Crop Insurance Winter Coverage Endorsement

1. Section (b)—Clarify that the endorsement is available only if the actuarial table provides a premium rate for it.

2. Section (c)(5)—Clarify that all eligible winter wheat acreage must be insured under the endorsement. Allowing a choice of the acres to be insured could result in adverse selection as producers could choose to insure only acreage more prone to winter damage. Current provisions do not specify this requirement.

3. Option A—Increase the coverage amount from 30 to 50 percent of the production guarantee. Comments regarding the previous 30 percent coverage level have indicated that it is inadequate and very few Option A policies have been sold. Premium rates will be increased to reflect the additional payment.

4. Option A, section (a)—Clarify that if the insured elects to destroy the crop and plant the acreage to spring wheat, it will be insured under the provisions covering spring planted wheat. Current provisions give insureds the option of insuring such acreage. This change is intended to maintain consistency in insurance requirements for spring wheat planted to replace damaged winter wheat and reduce reporting requirements associated with a decision to insure.

5. Option B—Change the amount of coverage provided from 100 to 70 percent of the production guarantee. This change is made based on the potential production and income from various spring crops, including spring wheat, and the potential income from coverage provided by Option B.

Premium rates will be reduced accordingly.

6. Option B, section (c)—Clarify that if the insured elects to destroy the crop and plant the acreage to spring wheat, it will be insured under the provisions covering spring planted wheat. Current provisions give insureds the option of insuring such acreage. This change is intended to maintain consistency in insurance requirements for spring wheat planted to replace damaged winter wheat and reduce reporting requirements associated with a decision to insure.

**List of Subjects in 7 CFR Part 457**

Barley, Crop insurance, Flax, Oats, Rye, Wheat.

**Proposed Rule**

Accordingly, as set forth in the preamble, the Federal Crop Insurance Corporation proposes to amend 7 CFR part 457 to read as follows:

## PART 457—COMMON CROP INSURANCE REGULATIONS

1. The authority citation for 7 CFR part 457 continues to read as follows:

**Authority:** 7 U.S.C. 1506(l) and 1506(p).

2. Amend the crop insurance endorsement in § 457.101 as follows:

a. Amend section 1 of the crop provisions by adding a definition for ''Kamut'' and revising the definitions of ''prevented planting'' and ''small grains;''

b. Revise section 2;

c. Revise section 3;

d. Revise section 4;

e. Revise section 5;

f. Revise section 6(b)(2) and add section 6(d);

g. Revise sections 7(a)(1) introductory text, 7(a)(2)(iii), 7(a)(2)(v) and 7(b)(4);

h. Revise section 9;

i. Revise sections 11(b), 11(c)(1)(iv) and 11(d); and

j. Revise section 12, all to read as follows:

### § 457.101 Small grains crop insurance.

* * * * *

1. Definitions.

* * * * *

*Kamut.* A variety of wheat (*Triticum polonicum*) that is commonly called ''Kamut.'' Kamut is considered to be spring wheat for the purposes of this policy.

* * * * *

*Prevented planting.* In lieu of the definition contained in the Basic Provisions, failure to plant the insured crop with proper equipment by the latest final planting date designated in the Special Provisions for the insured crop in the county. You may also be eligible for a prevented planting payment if you failed to plant the insured crop with the proper equipment within the applicable late planting period following the latest final planting date. You must have been prevented from planting the insured crop due to an insured cause of loss that is general in the surrounding area and that prevents other producers from planting acreage with similar characteristics.

* * * * *

*Small grains.* Wheat, including only common wheat (*Triticum aestivum*), club wheat (*T. compactum*), durum wheat (*T. durum*) and Kamut (*T. polonicum*); barley (*Hordeum vulgare*), excluding hull-less and black barley; oats (*Avena sativa* and *A. byzantina*); rye (*Secale Cereale*); flax (*Linum usitatissimum*); and buckwheat (*Fagopyrum esculentum*).

* * * * *

2. Unit Division

In addition to the requirements of section 34(b) of the Basic Provisions, for wheat only, in addition to, or instead of, establishing optional units by section, section equivalent or FSA farm serial number and by irrigated and non-irrigated practices, optional units may be established if each optional unit contains only initially planted winter wheat, only initially planted spring wheat, only initially planted club wheat or only initially planted durum wheat. Separate optional units for initially planted winter wheat and initially planted spring wheat may be established only in counties having both winter and spring type final planting dates as designated in the Special Provisions. A separate optional unit for club wheat may be established only in counties for which the Special Provisions designate club wheat as a wheat type. A separate optional unit for durum wheat may be established only in counties for which the Special Provisions designate durum wheat as a wheat type.

3. Insurance Guarantees, Coverage Levels, and Prices for Determining Indemnities

(a) In addition to the requirements of section 3 of the Basic Provisions, you may select only one price election for each crop in the county insured under this policy unless the Special Provisions provide different price elections by type, in which case you may select one price election for each crop type designated in the Special Provisions. The price elections you choose for each type must have the same percentage relationship to the maximum price offered by us for each type. For example, if you choose 100 percent of the maximum price election for one type, you must also choose 100 percent of the maximum price election for all other types.

(b) In addition to the requirements of section three of the Basic Provisions, in counties with both fall and spring sales closing dates for the insured crop, you may change your coverage level or price election until the spring sales closing date only if you do not have any fall planted acreage of the insured crop.

4. Contract Changes

In accordance with section 4 of the Basic Provisions, the contract change date is November 30 preceding the cancellation date for counties with a March 15 cancellation date and June 30 preceding the cancellation date for all other counties.

5. Cancellation and Termination Dates

The cancellation and termination dates are:

| Crop, state and county | Cancellation date | Termination date |
|---|---|---|
| Wheat: | | |
| All Colorado counties except Alamosa, Archuleta, Conejos, Costilla, Custer, Delta, Dolores, Eagle, Garfield, Grand, La Plata, Mesa, Moffat, Montezuma, Montrose, Ouray, Pitkin, Rio Blanco, Rio Grande, Routt, Saguache, and San Miguel; all Iowa counties except Plymouth, Cherokee, Buena Vista, Pocahontas, Humbolt, Wright, Franklin, Butler, Black Hawk, Buchanan, Delaware, Dubuque and all Iowa counties north thereof; all Wisconsin counties except Buffalo, Trempealeau, Jackson, Wood, Portage, Waupaca, Outagamie, Brown, Kewaunee and all Wisconsin counties north thereof; all other states except Alaska, Arizona, California, Connecticut, Idaho, Maine, Massachusetts, Minnesota, Montana, Nevada, New Hampshire, New York, North Dakota, Oregon, Rhode Island, South Dakota, Utah, Vermont, Washington, and Wyoming. | September 30 ..... | September 30. |

| Crop, state and county | Cancellation date | Termination date |
|---|---|---|
| Archuleta, Custer, Delta, Dolores, Eagle, Garfield, Grand, La Plata, Mesa, Moffat, Montezuma, Montrose, Ouray, Pitkin, Rio Blanco, Routt and San Miguel Counties, Colorado; Connecticut; Idaho; Plymouth, Cherokee, Buena Vista, Pocahontas, Humbolt, Wright, Franklin, Butler, Black Hawk, Buchanan, Delaware and Dubuque Counties Iowa, and all Iowa counties north thereof; Massachusetts; all Montana counties except Daniels and Sheridan; New York; Oregon; Rhode Island; all South Dakota counties except Corson, Walworth, Edmunds, Faulk, Spink, Beadle, Kingsbury, Miner, McCook, Turner, Yankton and all South Dakota counties north and east thereof; Washington; Buffalo, Trempealeau, Jackson, Wood, Portage, Waupaca, Outagamie, Brown and Kewaunee Counties Wisconsin, and all Wisconsin counties north thereof; all Wyoming counties except Big Horn, Fremont, Hot Springs, Park, and Washakie. | September 30 | November 30. |
| Arizona; California; Nevada; and Utah | October 31 | November 30. |
| Alaska; Alamosa, Conejos, Costilla, Rio Grande and Saguache Counties, Colorado; Maine; Minnesota; Daniels and Sheridan Counties, Montana; New Hampshire; North Dakota; Corson, Walworth, Edmunds, Faulk, Spink, Beadle, Kingsbury, Miner, McCook, Turner, and Yankton Counties, South Dakota, and all South Dakota counties north and east thereof; Vermont; and Big Horn, Fremont, Hot Springs, Park, and Washakie Counties, Wyoming. | March 15 | March 15. |
| Barley: | | |
| All New Mexico counties except Taos; Texas, Oklahoma, Missouri, Illinois, Indiana, Ohio, Pennsylvania, New Jersey and all states south and east thereof. | September 30 | September 30. |
| Kit Carson, Lincoln, Elbert, El Paso, Pueblo and Las Animas Counties, Colorado and all Colorado counties south and east thereof; Connecticut; Kansas; Massachusetts; New York; and Rhode Island. | September 30 | November 30. |
| Arizona; California; Clark, Humboldt, Nye and Pershing Counties, Nevada; and Box Elder, Millard and Utah Counties, Utah. | October 31 | November 30. |
| All Colorado counties except Kit Carson, Lincoln, Elbert, El Paso, Pueblo and Las Animas, and all Colorado counties south and east thereof; all Nevada counties except Clark, Humboldt, Pershing and Nye; Taos County, New Mexico; all Utah counties except Box Elder, Millard and Utah; and all other states except Arizona, California, and (except) Texas, Oklahoma, Missouri, Illinois, Indiana, Ohio, Pennsylvania, New Jersey and all states south and east thereof. | March 15 | March 15. |
| Oats: | | |
| Alabama; Arkansas; Florida; Georgia; Louisiana; Mississippi; All New Mexico counties except Taos County; North Carolina; Oklahoma; South Carolina; Tennessee; Texas; and Patrick, Franklin, Pittsylvania, Campbell, Appomattox, Fluvanna, Buckingham, Louisa, Spotsylvania, Caroline, Essex, and Westmoreland Counties, Virginia, and all Virginia counties east thereof. | September 30 | September 30. |
| Arizona; All California counties except Del Norte, Humboldt, Lassen, Modoc, Plumas, Shasta, Siskiyou and Trinity. | October 31 | October 31. |
| Del Norte, Humbolt, Lassen, Modoc, Plumas, Shasta, Siskiyou, and Trinity Counties, California; Taos County, New Mexico; all Virginia counties except Patrick, Franklin, Pittsylvania, Campbell, Attomattox, Fluvanna, Buckingham, Louisa, Spotsylvania, Caroline, Essex, and Westmoreland, and all Virginia counties east thereof; and all other states except Alabama, Arizona, Arkansas, Florida, Georgia, Louisiana, Mississippi, North Carolina, Oklahoma, South Carolina, Tennessee, and Texas. | March 15 | March 15. |
| Rye: | | |
| All states | September 30 | September 30. |
| Flax: | | |
| All states | March 15 | March 15. |
| Buckwheat: | | |
| All states | March 15 | March 15. |

6. Insured Crop

* * * * *

(b) * * *

(2) May report all planted acreage as insurable when you report your acreage for the crop year. Premium will be due on all the acreage except as set out herein. If the Special Provisions allow a reduced premium amount for acreage intentionally destroyed prior to harvest, you may qualify for such reduction only if you notify us in writing on or before the date designated in the Special Provisions of the intended destruction, and do not claim an indemnity on the acreage. No premium reduction will be allowed if the required notice is not given or if you claim an indemnity for the acreage. Upon receiving timely notice, insurance coverage on the acreage you do not intend to harvest will cease and we will revise your acreage report to indicate the applicable reduction in premium. If you do not destroy the crop as intended, you will be subject to the under-reporting provisions contained in section 6 of the Basic Provisions.

* * * * *

(d) In counties for which the actuarial table provides premium rates for malting barley coverage, an endorsement is available (7 CFR 457.118) that provides additional insurance protection for malting barley. This endorsement provides coverage options for producers who grow malting barley under contract and those who do not have a contract. Coverage under the endorsement is effective only if you qualify under the terms of the option selected and you execute the endorsement by the sales closing date.

7. Insurance Period

* * * * *

(a) * * *

(1) For oats, rye, flax and buckwheat, the following limitations apply:

* * * * *

(2) * * *

(iii) Whenever the Special Provisions designate both fall and spring final planting dates, any winter barley or wheat that is damaged before the spring final planting date, to the extent that growers in the area would normally not further care for the crop, must be replanted to a winter type of the insured crop unless we agree that replanting is not practical. If it is not practical to replant to winter barley, but is practical to plant spring barley, you must replant spring barley to keep your barley insurance in force. If it is not practical to replant to winter wheat but is practical to plant spring wheat, you must replant spring wheat to keep your wheat insurance in force. Any winter barley or wheat acreage that is replanted to a spring type of the same crop will be insured as the winter type and will maintain the guarantee, premium and price election applicable to the winter type. You may also elect to destroy any remaining wheat on the acreage and, if eligible, receive a payment in accordance with the provisions in section 9(e). If you

have elected coverage under a wheat winter coverage option (if available in the county), insurance will be in accordance with the option.

* * * * *

(v) Whenever the Special Provisions designate only a spring final planting date, any acreage of fall planted barley or wheat is not insured unless you request such coverage on or before the spring sales closing date, and we agree in writing that the acreage has an adequate stand in the spring to produce the yield used to determine your production guarantee. Insurance will attach to such acreage on the date we determine an adequate stand exists or on the spring final planting date if we do not determine adequacy of the stand by the spring final planting date. Any acreage of such fall planted barley or wheat that is damaged after it is accepted for insurance but before the spring final planting date, to the extent that growers in the area would normally not further care for the crop, must be replanted to a spring type of the insured crop unless we agree it is not practical to replant. If fall planted acreage is not to be insured it must be recorded on the acreage report as uninsured fall planted acreage.

(b) * * *

(4) The following applicable date of the calendar year in which the crop is normally harvested:

(i) September 25 following planting in Alaska;

(ii) July 31 in Alabama, Arizona, Arkansas, Connecticut, Delaware, Florida, Georgia, Kentucky, Louisiana, Maryland, Mississippi, New Jersey, North Carolina, South Carolina and Tennessee; or

(iii) October 31 in all other states; or

* * * * *

9. Replanting Payments

(a) A replanting payment for small grains, is allowed as follows:

(1) In lieu of provisions in section 13 of the Basic Provisions that limit the amount of a replant payment to the actual cost of replanting, the amount of any replanting payment will be determined in accordance with these crop provisions.

(2) You must comply with all requirements regarding replanting payments contained in section 13 of the Basic Provisions (except as allowed in section 9(a)(1)) and in any winter coverage endorsement for which you are eligible and which you have elected;

(3) The insured crop must be damaged by an insurable cause of loss to the extent that the remaining stand will not produce at least 90 percent of the production guarantee for the acreage;

(4) The acreage must have been initially planted to a spring type of the insured crop in those counties with only a spring final planting date;

(5) The damage must occur after the fall final planting date in those counties where both a fall and spring final planting date are designated. (If the Special Provisions provide more than one fall final planting date, the fall final planting date applicable to policies with the Wheat Winter Coverage Endorsement will be used for this purpose, regardless of whether or not the endorsement is actually in effect.); and

(6) The replanted crop must be seeded at a rate sufficient to achieve a total (undamaged and new seeding) plant population that will produce at least the yield used to determine your production guarantee.

(b) No replanting payment will be made for acreage initially planted to a winter type of the insured crop (includes rye) in any county for which the Special Provisions contain only a fall final planting date (includes final planting dates in December, January and February).

(c) The maximum amount of the replanting payment per acre will be the lesser of 20.0 percent of the production guarantee or the number of bushels for the applicable crop specified below, multiplied by your price election and your share:

(1) 2 bushels for flax or buckwheat;

(2) 4 bushels for wheat; or

(3) 5 bushels for barley or oats.

(d) When a crop is replanted using a practice that is uninsurable for an original planting, the liability on the unit will be reduced by the amount of the replanting payment. The premium amount will not be reduced.

(e) Replanting payments will be calculated using the price election for the crop type that is replanted and insured. For example, if damaged spring wheat is replanted to Durum wheat, the price election applicable to Durum wheat will be used to calculate any replanting payment that may be due. A revised acreage report will be required to reflect the replanted type. Notwithstanding the previous two sentences, the following will have a replanting payment based on the guarantee and price election for the crop type initially planted:

(1) Any damaged winter crop type that is replanted to a spring crop type, but that retains insurance based on the winter crop type guarantee and price election; and

(2) Any acreage replanted at a reduced seeding rate into a partially damaged stand of the insured crop.

(f) When any acreage of winter wheat is eligible for a replanting payment in accordance with these crop provisions and the Basic Provisions, but you elect not to replant wheat, you may destroy any remaining wheat on the acreage and utilize it for any purpose other than the production of wheat. By doing so, you agree to accept an amount of production to count against the unit production guarantee equal to 85 percent of the production guarantee for the damaged acreage, or an appraisal determined in accordance with the provisions in section 11 if such an appraisal results in a greater amount of production. This amount will be considered production to count in determining any final indemnity on the unit and will be used to settle your claim as described in section 11.

* * * * *

11. Settlement of Claim

* * * * *

(b) In the event of loss or damage covered by this policy, we will settle your claim by:

(1) Multiplying the insured acreage by its respective production guarantee;

(2) Multiplying each result in section 11(b)(1) by the respective price election;

(3) Totaling the results of section 11(b)(2);

(4) Multiplying the total production to be counted of each type, if applicable, (see sections 11(c), (d), and (e)) by the respective price election;

(5) Totaling the results of section 11(b)(4);

(6) Subtracting the result of section 11(b)(5) from the result in section 11(b)(3); and

(7) Multiplying the result of section 11(b)(6) by your share.

(c) * * *

(1) * * *

(iv) Potential production on insured acreage that you intend to put to another use or abandon, if you and we agree on the appraised amount of production. Upon such agreement, the insurance period for that acreage will end when you put the acreage to another use or abandon the crop. If agreement on the appraised amount of production is not reached:

(A) If you do not elect to continue to care for the crop, we may give you consent to put the acreage to another use if you agree to leave intact, and provide sufficient care for, representative samples of the crop in locations acceptable to us (The amount of production to count for such acreage will be based on the harvested production or appraisals from the samples at the time harvest should have occurred. If you do not leave the required samples intact, or you fail to provide sufficient care for the samples, our appraisal made prior to giving you consent to put the acreage to another use will be used to determine the amount of production to count); or

(B) If you elect to continue to care for the crop, the amount of production to count for the acreage will be the harvested production, or our reappraisal if additional damage occurs and the crop is not harvested; and

* * * * *

(d) Mature wheat, barley, oat, rye, and buckwheat production may be adjusted for excess moisture and quality deficiencies. Flax production may be adjusted for quality deficiencies only. If a moisture adjustment is applicable, it will be made prior to any adjustment for quality.

(1) Production will be reduced by .12 percent for each .1 percentage point of moisture in excess of;

(i) 13.5 percent for wheat;

(ii) 14.5 percent for barley;

(iii) 14.0 percent for oats; and

(iv) 16.0 for rye and buckwheat.

We may obtain samples of the production to determine the moisture content.

(2) Production will be eligible for quality adjustment if:

(i) Deficiencies in quality, in accordance with the Official United States Standards for Grain, result in:

(A) Wheat, except Kamut, not meeting the grade requirements for U.S. No. 4 (grades U.S. No. 5 or worse) because of test weight, total damaged kernels (heat-damaged kernels will not be considered to be damaged), shrunken or broken kernels, defects (foreign material and heat damage will not be considered to be defects), a musty, sour, or commercially objectional foreign odor (except smut odor), or grading garlicky, light smutty, smutty or ergoty;

(B) Barley not meeting the grade requirements for U.S. No. 4 (grades U.S. No.

5 or worse) because of test weight, percentage of sound barley (heat-damaged kernels will be considered to be sound barley), damaged kernels (heat-damaged kernels will not be considered to be damaged), thin barley, black barley, a musty, sour, or commercially objectional foreign odor (except smut or garlic odor), or grading blighted, smutty, garlicky, or ergoty;

(C) Oats not meeting the grade requirements for U.S. No. 4 (grade U.S. sample grade) because of test weight or percentage of sound oats (heat-damaged kernels will be considered to be sound oats), a musty, sour, or commercially objectional foreign odor (except smut or garlic odor), or grading smutty, thin, garlicky, or ergoty;

(D) Rye not meeting the grade requirements for U.S. No. 3 (grades U.S. No. 4 or worse) because of test weight, percent damaged kernels (heat-damaged kernels will not be considered to be damaged) or thin rye, a musty, sour, or commercially objectional foreign odor (except smut or garlic odor), or grading light smutty, smutty, light garlicky, garlicky, or ergoty;

(E) Flaxseed not meeting the grade requirements for U.S. No. 2 (grades U.S. sample grade) due to test weight, damaged kernels (heat-damaged kernels will not be considered to be damaged), or a musty, sour, or commercially objectional foreign odor (except smut or garlic odor);

(ii) Deficiencies in the quality of buckwheat, determined in accordance with applicable state grading standards, result in it having a test weight lower than 42 pounds per bushel, or a musty, sour or commercially objectional foreign odor (except smut or garlic odor), or grading garlicky, smutty or ergoty if such grades are provided for by the applicable state grading standards;

(iii) Quality factors for Kamut fall below the levels contained in the Official United States Standards for Grain that cause durum wheat to grade less than U.S. No. 4. For example, if durum wheat grades less than U.S. No. 4 when its test weight falls below 54.0 pounds per bushel, Kamut would be eligible for quality adjustment if its test weight falls below 54.0 pounds per bushel. The same quality factors considered for quality adjustment of durum wheat will be applicable and determination of deficiencies will be made in accordance with the Federal Grain Inspection Service directive that establishes procedures for quality factor analysis of Kamut seed; or

(iv) Substances or conditions are present, including mycotoxins, that are identified by the Food and Drug Administration or other public health organizations of the United States as being injurious to human or animal health.

(3) Quality will be a factor in determining your loss only if:

(i) The deficiencies, substances, or conditions resulted from a cause of loss against which insurance is provided under these crop provisions;

(ii) All determinations of these deficiencies, substances, or conditions are made using samples of the production obtained by us or by a disinterested third party approved by us; and

(iii) The samples are analyzed by a grain grader licensed under the authority of the United States Grain Standards Act or the United States Warehouse Act with regard to deficiencies in quality, or by a laboratory approved by us with regard to substances or conditions injurious to human or animal health. Test weight for quality adjustment purposes may be determined by our loss adjustor.

(4) Small grain production that is eligible for quality adjustment, as specified in sections 11(d)(2) and (3), will be reduced by the quality adjustment factor contained in the Special Provisions.

* * * * *

12. Late Planting

A late planting period is applicable to small grains, except, to any wheat acreage covered under the terms of the Wheat Crop Insurance Winter Coverage Endorsement. Wheat covered under the terms of the Wheat Crop Insurance Winter Coverage Endorsement must be planted on or prior to the applicable final planting date specified in the Special Provisions. In counties having a fall final planting date for acreage covered under the Wheat Winter Coverage Endorsement and a fall final planting date for acreage not covered under the endorsement, the fall late planting period will begin after the final planting date for acreage not covered under the endorsement.

* * * * *

3. Amend the crop insurance endorsement contained in § 457.102 as follows:

a. Revise section (b);

b. Add section (c)(5);

c. Amend Option A by revising the heading, the introductory paragraph and paragraph (a) introductory text; and

d. Amend Option B by revising the heading, the introductory paragraph and paragraph (c) introductory text, all to read as follows:

**§ 457.102 Wheat crop insurance winter coverage endorsement.**

* * * * *

(b) This endorsement is available only in counties for which the Special Provisions designate both a fall final planting date and a spring final planting date, and for which the actuarial table provides a premium rate for this coverage.

(c) * * *

(5) All eligible winter wheat acreage must be insured under this endorsement.

* * * * *

Option A (50 Percent Coverage and Acreage Release)

Whenever any winter wheat is damaged during the insurance period and at least 20 acres or 20 percent of the acreage in the unit, whichever is less, does not have an adequate stand to produce at least 90 percent of the production guarantee for the acreage, you may, at your option, take one of the following actions:

(a) Destroy the remaining crop on such acreage. By doing so, you agree to accept an amount of production to count against the unit production guarantee equal to 50 percent of the production guarantee for the damaged acreage, or an appraisal determined in accordance with section 11(c)(1) of the Small Grains Crop Provisions if such an appraisal results in a greater amount of production. This amount will be considered production to count in determining any final indemnity on the unit and will be used to settle your claim as described in section 11 (Settlement of Claim) of the Small Grains Crop Provisions. You may use such acreage for any purpose, including planting and separately insuring any other crop. If you elect to plant spring wheat, it will be insured in accordance with the policy provisions that are applicable to acreage that is initially planted to spring wheat, and you must:

* * * * *

Option B (70 Percent Coverage and Acreage Release)

Whenever any winter wheat is damaged during the insurance period and at least 20 acres or 20 percent of the acreage in the unit, whichever is less, does not have an adequate stand to produce at least 90 percent of the production guarantee for the acreage, you may, at your option, take one of the following actions:

* * * * *

(c) Destroy the remaining crop on such acreage. By doing so, you agree to accept an amount of production to count against the unit production guarantee equal to 30 percent of the production guarantee for the damaged acreage, or an appraisal determined in accordance with section 11(c)(1) of the Small Grains Crop Provisions if such an appraisal results in a greater amount of production. This amount will be considered production to count in determining any final indemnity on the unit and will be used to settle your claim as described in section 11 (Settlement of Claim) of the Small Grains Crop Provisions. You may use such acreage for any purpose, including planting and separately insuring any other crop. If you elect to plant spring wheat, it will be insured in accordance with the policy provisions that are applicable to acreage that is initially planted to spring wheat, and you must:

* * * * *

Signed in Washington, DC, on April 11, 2000.

**Kenneth D. Ackerman,**

*Manager, Federal Crop Insurance Corporation.*

[FR Doc. 00–9599 Filed 4–19–00; 8:45 am]

BILLING CODE 3410–08–P

## FARM CREDIT ADMINISTRATION

## 12 CFR Parts 614, 615, and 618

**RIN 3052–AB96**

## Loan Policies and Operations; Funding and Fiscal Affairs, Loan Policies and Operations, and Funding Operations; General Provisions; OFI Lending

**AGENCY:** Farm Credit Administration (FCA).

**ACTION:** Advance notice of proposed rulemaking (ANPRM).

**SUMMARY:** The FCA is considering whether to revise its regulations governing how Farm Credit System (System) banks lend to other financing institutions (OFIs). OFIs include commercial banks, savings institutions, credit unions, trust companies, agricultural credit corporations, and other agricultural and aquatic lenders. This ANPRM asks you to comment on the appropriate risk weighting of System bank loans to OFIs, the public availability of the identities of OFIs, cross-district funding of OFIs, and ways to improve System banks' funding of OFIs.

**DATES:** You may send us comments by June 19, 2000.

**ADDRESSES:** Send us your comments by electronic mail to ''reg-com@fca.gov'' or through the Pending Regulations section of our Web site at ''www.fca.gov.'' You may also send written comments to Patricia W. DiMuzio, Director, Regulation and Policy Division, Office of Policy and Analysis, Farm Credit Administration, 1501 Farm Credit Drive, McLean, Virginia 22102–5090, or by facsimile transmission to (703) 734–5784. You may review copies of all comments we receive in the Office of Policy and Analysis, Farm Credit Administration.

**FOR FURTHER INFORMATION CONTACT:**

Dennis K. Carpenter, Senior Policy Analyst, Office of Policy and Analysis, Farm Credit Administration, McLean, VA 22102–5090, (703) 883–4498, TDD (703) 883–4444,

or

Rebecca S. Orlich, Senior Attorney, Office of General Counsel, Farm Credit Administration, McLean, VA 22102–5090, (703) 883–4020, TDD (703) 883–4444.

**SUPPLEMENTARY INFORMATION:**

## I. Objective

The objective of this ANPRM is to seek comment on whether we should revise FCA's regulations to improve and better promote OFI access to System funding. Through this ANPRM, we seek comment on issues related to:

- Revising System banks' capitalization requirements for loans to OFIs;
- Permitting disclosure of OFI corporate identities;
- Removing geographical impediments to OFIs' obtaining System bank funding; and
- Identifying other impediments to System bank funding of OFIs.

This ANPRM is another step in supporting the FCA Board's Philosophy Statement of July 14, 1998, in which we explained our goal to give farmers and ranchers greater access to credit.

## II. Background

The Farm Credit Act of 1971, as amended (1971 Act),[1] authorizes Farm Credit Banks (FCBs) and agricultural credit banks (ACBs) (collectively, System banks) to fund and discount short- and intermediate-term loans for certain non-System lenders. The 1971 Act refers to these non-System lenders as other financing institutions, or OFIs.[2] Under the 1971 Act, OFIs include:

- National and State banks;
- Trust companies;
- Agricultural credit corporations;
- Incorporated livestock loan companies;
- Savings institutions;
- Credit unions;
- Any association of agricultural producers making loans to farmers and ranchers; and
- Any corporation making loans to producers or harvesters of aquatic products.

Section 1.7(b) of the 1971 Act[3] enables OFIs to get funding from FCBs or ACBs for any loan that a production credit association (PCA) could make under section 2.4[4] of the 1971 Act. PCA loans are short-and intermediate-term loans with maturities ranging up to 10 years (15 years to producers or harvesters of aquatic products). Only eligible farmers, ranchers, aquatic producers and harvesters, processing and marketing operators, farm-related businesses, and rural homeowners can get these loans.

The OFI discount and lending authorities of System banks help to fulfill the banks' mission to finance agriculture, aquaculture, and other named rural needs. Congress first granted OFI lending authorities to System banks in 1923 and 1930, in the predecessor legislation to the 1971 Act.

Legislative history reveals that Congress originally granted OFIs discount privileges at System banks because operating credit for farmers and ranchers was scarce. Since then, Congress has continued to respond to the changing needs of agricultural producers and other rural residents for affordable short-and intermediate-term credit. Over the decades, Congress has updated the authorities of System banks to fund and aid both System and non-System lenders. As our Philosophy Statement on competition provides and as directed by provisions of the 1971 Act, we continue to explore ways of making competitive credit available through more avenues to farmers, ranchers, and other eligible borrowers.

In the early 1980s, both the number of OFIs and the volume of business they do with System banks peaked and subsequently declined and have since remained significantly low. In 1997, to expand OFIs' access to System bank funding and discounting, we amended our regulations to remove many OFI eligibility limits not required by the 1971 Act.[5] We also required a System bank's assessment of total charges for an OFI loan to be comparable to the charges the bank imposes on its direct lender System institutions. In addition, to improve safety and soundness, those amendments also required all OFI loans to be full-recourse loans.

## III. Philosophy Statement

Among other things, our 1998 Philosophy Statement on competition communicates our desire for the System to more fully serve the credit needs of agricultural producers and other rural borrowers, as Congress intended, including short-and intermediate-term credit. The System banks' relationship with OFIs is important for meeting these needs. To support the bank and OFI relationship, we continue to identify ways to improve OFIs' access to System funding. After reviewing our regulatory requirements, we have decided to consider the following changes:

(1) Revising the level of capital System banks must hold against their loans to OFIs based on certain risk characteristics;

(2) Permitting disclosure of the names of entities that have an OFI relationship with a System bank; and

(3) Removing impediments to setting up an OFI relationship outside a System bank's territorial boundaries.

We believe that revising these requirements may spur development of more OFI relationships and, thus, provide added avenues of credit available to farmers and ranchers.

We recognize that reducing the risk weighting on OFI loans could reduce capital available to support the risk in the bank's assets. However, if the risk is properly assessed, such adjustment to the risk weighting should not pose a safety and soundness concern. Furthermore, we believe an approach to capital requirements of OFIs that is more consistent with those of System associations is appropriate.

[1] 12 U.S.C. 2001 *et seq.*

[2] 12 U.S.C. 2020(b).

[3] 12 U.S.C. 2015(b).

[4] 12 U.S.C. 2075.

[5] *See* 63 FR 36541 (July 7, 1998).

In this ANPRM, we seek comments from all interested parties to aid us in developing proposed regulations that increase opportunities for OFI lending to the extent allowed by the Act and within appropriate safety and soundness boundaries. We also ask for your help in identifying other impediments to System bank funding of OFIs.

*A. Risk-Weighting Requirements of Capital*

1. Current Basis for Risk-Weighting Requirements

Subparts H and K of part 615 of FCA regulations impose risk-based capital requirements on System banks. We adopted risk-weighting categories for System bank assets as part of the 1988 regulatory capital revisions required by the Agricultural Credit Act of 1987. The categories are similar to the risk-weighting categories from the 1988 International Basle Accord, whose principles the Federal banking regulators have also adopted.

Under our regulations, a System bank's loan to an OFI receives a risk weighting of 100 percent.[6] This means that, for a System bank to meet its minimum 7-percent permanent capital requirement on a loan to an OFI, it would need to hold a minimum of $7.00 in capital against each $100 of the loan to the OFI ($100 × 100 percent × 7 percent). By contrast, a loan to an affiliated System association receives a risk weighting of 20 percent.[7] This translates to the bank's holding a minimum of $1.40 in capital for each $100 of loan to the association ($100 × 20 percent × 7 percent).

The FCA's decision to risk-weight a loan to an affiliated System institution at 20 percent was based on several general characteristics that serve to lower the risk of that category of loans. They are:

- *GFA Requirements.* The association must enter a general financing agreement (GFA) with its bank, under which the association must meet the bank's lending and loan underwriting standards.[8]
- *Pledge of Collateral.* The association typically pledges all its assets as collateral for the loan from the bank, and the bank is usually the association's only source of funding.
- *Bank Supervision.* System banks, under the 1971 Act and related FCA regulations, have supervisory authority over certain aspects of System association operations.
- *FCA Examination and Regulation.* Our examination of System associations ensures that we are aware of any creditworthiness or other concerns at an early stage and can take corrective action. Under our statutory authority, we can take supervisory and enforcement actions against System associations when the need arises.[9]
- *FCA Capital Rules.* We prescribe capital standards that System associations must meet, to ensure the associations have enough capital to operate safely and soundly.[10]

2. Comparison of OFI Funding Characteristics

System bank funding relationships with OFIs have some, but not all, of the risk-reducing features of System bank loans to System associations. They are:

- *GFA Requirement.* A System bank must have the same type of GFA with an OFI that it has with a System association.[11]
- *Pledge of Collateral.* Although some OFIs use System banks as their sole source of funding and pledge all assets to the loan, more typically an OFI has multiple sources of funding and does not pledge all assets as collateral to the System bank. Nevertheless, FCA regulations require a System bank to take as collateral all notes, drafts, and other obligations it funds or discounts for an OFI, and the OFI must endorse each obligation with full recourse or an unconditional guarantee. The bank must also require the OFI to provide extra collateral or other credit enhancements when needed.[12]
- *Bank Supervision.* The 1971 Act and our regulations do not give System banks supervisory authority over OFIs.
- *FCA Examination and Regulation.* The law does not require us to examine OFIs, but the 1971 Act and regulations enable us either to examine OFIs or to have access to other regulators' examination reports. The 1971 Act allows us to examine all OFIs, except federally regulated financial institutions, and allows Federal agencies to give us all reports and other information they have on the condition of any OFI.[13] In addition, under the 1971 Act and our regulations, each OFI that is a State-chartered bank, trust company, or savings institution must authorize its State regulator to give us examination reports. Each OFI that is not a depository institution must consent in writing to be examined by us.[14] However, we do not have general authority to regulate the activities of OFIs (other than the funding relationship with the System bank) or to take supervisory or enforcement actions against OFIs.
- *FCA Capital Rules.* We do not impose capital requirements on OFIs. However, the 1971 Act does limit OFI funding and discounting to OFIs whose debt is less than 10 times their paid-in and unimpaired capital and surplus, or a lesser amount if allowed by the laws of the OFI's jurisdiction.[15] In addition, some OFIs, such as commercial banks and savings institutions, have capital requirements that are similar to our requirements for System institutions.

3. Risk-Weighting Options

We have several choices for revising the risk weighting of loans to OFIs. If we decide that OFI loans, as a class, have a lower risk than other assets in the 100-percent risk-weighting category, we can lower the risk weighting uniformly on all OFI loans.

Another alternative is to place OFI loans in different risk-weighting categories to reflect differences in the type of OFI. Loans to OFIs that are regularly examined and have capital requirements similar to our capital rules, such as commercial banks, might qualify for a lower risk weighting. Other OFIs that are unregulated and do not have capital requirements similar to our capital rules might have a higher risk weighting.

Yet another choice would be to lower the risk weighting on loans to OFIs that meet certain risk mitigation criteria. For example, a proposed June 1999 revision to the Basle Accord seeks to reassess the risk weightings currently assigned to assets.[16] The proposed revision would place a new emphasis on using risk mitigation techniques and differentiating risk exposures. To mitigate risk on an OFI loan, and thus lower the risk weighting, the OFI could pledge additional security in the form of readily marketable, highly liquid securities (such as AAA-or AA-rated securities). Another risk mitigation technique would be for a System bank to analyze an OFI's capital and financial condition and to require the OFI to meet and maintain certain capital standards, through terms of their GFA.

[6] 12 CFR 615.5210(f)(2)(iv)(C).

[7] 12 CFR 615.5210(f)(2)(ii)(I).

[8] 12 CFR 614.4120 and 614.4125.

[9] 12 U.S.C. 2261–2274.

[10] 12 U.S.C. 2154, 2154a: 12 CFR part 615, subparts H through M.

[11] 12 CFR 614.4120, 614.4130, and 614.4560(a)(1).

[12] 12 CFR 614.4570.

[13] 12 U.S.C. 2254(a), 2255, 2257.

[14] 12 U.S.C. 2256; 12 CFR 614.4560(e).

[15] 12 U.S.C. 2015(b)(3).

[16] Information about the Basle Accord proposals is at the Web site for the Bank for International Settlements, *www.bis.org.*

*B. Disclosure of Names of OFIs*

The FCA's regulations on releasing information [17] currently prohibit System institutions from disclosing information about borrowers and stockholders. Also, the FCA has routinely kept confidential the names of borrowers that we have obtained during examinations. However, we have never interpreted these prohibitions as preventing release of the names of PCAs (or other System associations) that, like OFIs, borrow from a System bank but are not retail borrowers. In fact, this information is widely known because each System bank issues publicly available financial statements identifying its PCAs and other affiliated associations.

The reasons for protecting the identity of retail borrowers, who are mostly individual consumers such as farmers and ranchers or rural homeowners, may not be present for OFIs.[18] Keeping the identities of retail borrowers confidential shields them from unwanted marketing solicitations or publicity involving their personal financial business. It is unlikely that publicly identifying OFIs would have these effects. On the contrary, disclosing the names of lenders with OFI relationships could benefit OFIs because it could make prospective retail borrowers aware of these added sources of credit.

In this light, we are considering a requirement to disclose the names of entities that have OFI relationships with System banks. We are interested in receiving your comments and recommendations on the conditions under which to release the information. We note that we are not considering the release of any information about OFIs except the name of the business and other identifying information such as the type of agricultural credit the OFI offers.

*C. Cross-District Lending*

In July 1998, we amended the regulations to authorize a System bank to lend to an OFI whose headquarters are outside of the bank's territory or a majority of whose loan volume is outside of the bank's territory.[19] The final OFI regulations specifically revised § 614.4550 to allow:

(1) FCBs and ACBs to provide funding to any OFI applicant that maintains its headquarters in the funding bank's chartered territory, or has more than 50 percent of its outstanding eligible loan volume in the funding bank's chartered territory; and

(2) OFIs to apply to any other FCB or ACB if the original FCB or ACB denies or otherwise fails to approve an OFI's funding request within 60 days of receipt of a ''completed application'' as defined by 12 CFR 202.2(f).

In addition, an FCB or ACB may grant its consent for an OFI to seek financing from another System bank. The regulation also provides that no OFI will be required to terminate its existing funding or discount relationship with an FCB or ACB if, at a subsequent time, an OFI relocates its headquarters to the chartered territory of another System bank or the loan volume in the relevant territory falls below 50 percent.

The 1998 amendments gave new flexibility to OFIs for choosing a System bank for establishing a funding relationship. But we retained some restrictions because, at the time, System associations were restricted in their ability to seek financing from other System banks. However, the Board's subsequent Philosophy Statement supports broader funding access for borrowers and lending institutions. Therefore, given our continued interest to explore different alternatives that provide greater access to System funding, we are seeking comment on possible ways to provide greater flexibility to OFIs setting up funding relationships with System banks in different districts.

**IV. Questions**

In this ANPRM, we seek your comments on the following:

1. If we lower the risk weighting of capital to be held by System banks for all types of loans to OFIs, what risk-weighting category would be appropriate? Please provide your analysis of the level of risk weighting that you recommend.

2. How should we address the variety of possible OFI types and OFI relationships:

a. Would it be more appropriate to lower the risk weighting on OFI loans on a case-by-case basis, based on underwriting criteria for various risk categories? Why or why not? What underwriting criteria should we require System banks to establish for the various levels of risk weighting?

b. Should we consider the use of risk mitigation techniques (such as a pledge of added security), or differentiate between direct retail credit risk exposure and wholesale credit risk exposure? Why or why not? Please recommend how we should address risk mitigation techniques in our regulations.

c. What is the appropriate level of risk weighting on loans to OFIs that meet risk mitigation criteria? Please provide your recommendations and analysis.

3. Should we allow or require System banks to release the names of OFIs on request? Are there any drawbacks for the System bank, the OFI, or the OFI's customers, if the identities of OFIs are released? Do you believe any limits on the release of such information are necessary? Please provide your recommendations and associated explanation.

4. Should new regulations continue the territorial limits for OFIs' funding access to System banks as addressed in existing § 614.4550? If not, what if any factors should limit an OFI's choice of System bank? Please provide your recommendations and explanation.

5. Are there other regulatory changes we could make or alternatives not addressed above that we should consider to improve a System bank's ability to serve an OFI and its agricultural customers? Please provide your recommendations and explanation for such alternatives.

Dated: April 13, 2000.

**Vivian L. Portis,**

*Secretary, Farm Credit Administration Board.*

[FR Doc. 00–9849 Filed 4–19–00; 8:45 am]

BILLING CODE 6705–01–P

[17] 12 CFR part 618, subpart G.

[18] We note that the financial privacy protections of the recently enacted Gramm-Leach-Bliley Act, Pub. L. 106–102 (Nov. 12, 1999), protect only financial institution customers that are ''consumers''—that is, individuals.

[19] *See* 63 FR 36541 (July 7, 1998).

---

**DEPARTMENT OF TRANSPORTATION**

**Federal Aviation Administration**

**14 CFR Part 39**

**[Docket No. 99–NM–240–AD]**

**RIN 2120–AA64**

## Airworthiness Directives; Airbus Industrie Model A300, A300–600, and A310 Series Airplanes

**AGENCY:** Federal Aviation Administration, DOT.

**ACTION:** Notice of proposed rulemaking (NPRM).

**SUMMARY:** This document proposes the supersedure of an existing airworthiness directive (AD), applicable to certain Airbus Model A300, A300–600, and A310 series airplanes, that currently requires inspections to detect cracks in the lower spar axis of the nacelle pylon between ribs 9 and 10, and repair, if necessary. The existing AD also provides for optional modification of the pylon, which terminates the inspections for Model A300 and A310

series airplanes and increases the threshold and repetitive interval of the inspections for Model A300–600 series airplanes. This action would reduce the inspection threshold and require repetitive inspections following accomplishment of the optional modification for Model A310 series airplanes. This proposal is prompted by issuance of mandatory continuing airworthiness information by a foreign civil airworthiness authority. The actions specified by the proposed AD are intended to prevent fatigue cracking, which could result in reduced structural integrity of the lower spar of the pylon.

**DATES:** Comments must be received by May 22, 2000.

**ADDRESSES:** Submit comments in triplicate to the Federal Aviation Administration (FAA), Transport Airplane Directorate, ANM–114, Attention: Rules Docket No. 99–NM–240–AD, 1601 Lind Avenue, SW., Renton, Washington 98055–4056. Comments may be inspected at this location between 9 a.m. and 3 p.m., Monday through Friday, except Federal holidays.

The service information referenced in this AD may be obtained from Airbus Industrie, 1 Rond Point Maurice Bellonte, 31707 Blagnac Cedex, France. This information may be examined at the FAA, Transport Airplane Directorate, 1601 Lind Avenue, SW., Renton, Washington.

**FOR FURTHER INFORMATION CONTACT:** Norman B. Martenson, Manager, International Branch, ANM–116, FAA, Transport Airplane Directorate, 1601 Lind Avenue, SW., Renton, Washington 98055–4056; telephone (425) 227–2110; fax (425) 227–1149.

**SUPPLEMENTARY INFORMATION:**

## Comments Invited

Interested persons are invited to participate in the making of the proposed rule by submitting such written data, views, or arguments as they may desire. Communications shall identify the Rules Docket number and be submitted in triplicate to the address specified above. All communications received on or before the closing date for comments, specified above, will be considered before taking action on the proposed rule. The proposals contained in this notice may be changed in light of the comments received.

Comments are specifically invited on the overall regulatory, economic, environmental, and energy aspects of the proposed rule. All comments submitted will be available, both before and after the closing date for comments, in the Rules Docket for examination by interested persons. A report summarizing each FAA-public contact concerned with the substance of this proposal will be filed in the Rules Docket.

Commenters wishing the FAA to acknowledge receipt of their comments submitted in response to this notice must submit a self-addressed, stamped postcard on which the following statement is made: ''Comments to Docket Number 99–NM–240–AD.'' The postcard will be date stamped and returned to the commenter.

## Availability of NPRMs

Any person may obtain a copy of this NPRM by submitting a request to the FAA, Transport Airplane Directorate, ANM–114, Attention: Rules Docket No. 99–NM–240–AD, 1601 Lind Avenue, SW., Renton, Washington 98055–4056.

## Discussion

On April 28, 1995, the FAA issued AD 95–10–03, amendment 39–9220 (60 FR 25604, May 12, 1995), applicable to certain Airbus Industrie Model A300, A300–600, and A310 series airplanes, to require inspections to detect cracks in the lower spar axis of the nacelle pylon between ribs 9 and 10, and repair, if necessary. The existing AD also provides for optional modification of the pylon, which terminates the inspections for Model A300 and A310 series airplanes and increases the threshold and repetitive interval of the inspections for Model A300–600 series airplanes. That action was prompted by reports that fatigue cracks have been found between ribs 9 and 10 on the lower spar of the pylon, initiating at the center stiffener beyond the flat area. The requirements of that AD are intended to prevent such fatigue cracking, which could result in reduced structural integrity of the lower spar of the pylon.

## Actions Since Issuance of Previous Rule

Since issuance of AD 95–10–03, the Direction Generale de l'Aviation Civile (DGAC), which is the airworthiness authority for France, has advised the FAA that additional cracks have been found in the lower spar axis of the nacelle pylon between ribs 9 and 10 on Model A310 series airplanes at a lower total number of flight cycles than had been earlier reported. Based on these findings, the FAA has determined that, for Airbus Model A310 series airplanes, it is necessary to reduce the inspection threshold and, for airplanes on which the optional modification has been accomplished, to require that the inspections be repetitively performed.

## Explanation of Relevant Service Information

Airbus has issued Service Bulletin A310–54–2016, Revision 02, dated June 11, 1999 (for Model A310 series airplanes). The actions described in Revision 02 of this service bulletin are identical to those described in the original version and Revision 01 (which were cited as appropriate service information for accomplishment of the inspections). Revision 02 was issued to reduce the initial inspection threshold and, for airplanes modified in accordance with Service Bulletin A310–54–2022, Revision 1, dated March 16, 1999, to specify that the inspection be repetitively performed.

The DGAC classified Service Bulletin A310–54–2016 as mandatory and issued French airworthiness directive 1999–237–285(B), dated June 2, 1999, in order to assure the continued airworthiness of these airplanes in France. French airworthiness directive 1992–049–130(B) R4 was issued to remove Model A310 series airplanes from its applicability and to advise of the issuance of airworthiness directive 1999–237–285(B).

## FAA's Conclusions

These airplane models are manufactured in France and are type certificated for operation in the United States under the provisions of section 21.29 of the Federal Aviation Regulations (14 CFR 21.29) and the applicable bilateral airworthiness agreement. Pursuant to this bilateral airworthiness agreement, the DGAC has kept the FAA informed of the situation described above. The FAA has examined the findings of the DGAC, reviewed all available information, and determined that AD action is necessary for products of this type design that are certificated for operation in the United States.

## Explanation of Requirements of Proposed Rule

Since an unsafe condition has been identified that is likely to exist or develop on other airplanes of the same type design registered in the United States, the proposed AD would supersede AD 95–10–03 to continue to require inspections to detect cracks in the lower spar axis of the nacelle pylon between ribs 9 and 10, and repair, if necessary. The proposed AD would continue to provide for optional modification of the pylon; for Model A300 series airplanes, accomplishment of the modification would terminate the inspections; for Model A300–600 and A310 series airplanes, such

modification would increase the threshold and repetitive interval of the inspections.

**Differences Between Proposed Rule and Service Bulletins**

Operators should note that, although the service bulletins specify that the manufacturer may be contacted for disposition of certain repair conditions, this proposal would require the repair of those conditions to be accomplished in accordance with a method approved by either the FAA, or the DGAC (or its delegated agent). In light of the type of repair that would be required to address the identified unsafe condition, and in consonance with existing bilateral airworthiness agreements, the FAA has determined that, for this proposed AD, a repair approved by either the FAA or the DGAC would be acceptable for compliance with this proposed AD.

**Cost Impact**

The FAA estimates that 140 airplanes of U.S. registry will be affected by this AD.

It will take approximately 4 work hours per airplane to accomplish the inspection that was previously required by AD 95–10–03, and retained in this AD, at an average labor rate of $60 per work hour. Based on these figures, the cost impact of the inspection on U.S. operators is estimated to be $240 per airplane, per inspection cycle.

The total cost impact figure discussed above is based on assumptions that no operator has yet accomplished any of the requirements of this AD action, and that no operator would accomplish those actions in the future if this AD were not adopted.

Should an operator elect to accomplish the proposed optional modification, it would take approximately 104 work hours (52 work hours per pylon) to accomplish it, at an average labor rate of $60 per work hour. The cost of required parts would be approximately $1,200 per airplane. Based on these figures, the total cost impact of the optional modification is estimated to be $7,440 per airplane.

**Regulatory Impact**

The regulations proposed herein would not have a substantial direct effect on the States, on the relationship between the national Government and the States, or on the distribution of power and responsibilities among the various levels of government. Therefore, it is determined that this proposal would not have federalism implications under Executive Order 13132.

For the reasons discussed above, I certify that this proposed regulation (1) is not a ''significant regulatory action'' under Executive Order 12866; (2) is not a ''significant rule'' under the DOT Regulatory Policies and Procedures (44 FR 11034, February 26, 1979); and (3) if promulgated, will not have a significant economic impact, positive or negative, on a substantial number of small entities under the criteria of the Regulatory Flexibility Act. A copy of the draft regulatory evaluation prepared for this action is contained in the Rules Docket. A copy of it may be obtained by contacting the Rules Docket at the location provided under the caption **ADDRESSES**.

**List of Subjects in 14 CFR Part 39**

Air transportation, Aircraft, Aviation safety, Safety.

**The Proposed Amendment**

Accordingly, pursuant to the authority delegated to me by the Administrator, the Federal Aviation Administration proposes to amend part 39 of the Federal Aviation Regulations (14 CFR part 39) as follows:

## PART 39—AIRWORTHINESS DIRECTIVES

1. The authority citation for part 39 continues to read as follows:

**Authority:** 49 U.S.C. 106(g), 40113, 44701.

**§ 39.13 [Amended]**

2. Section 39.13 is amended by removing amendment 39–9220 (60 FR 25604, May 12, 1995), and by adding the following new airworthiness directive (AD), to read as follows:

**Airbus Industrie:** Docket 99–NM–240–AD. Supersedes AD 95–10–03, Amendment 39–9220.

*Applicability:* The following airplanes, certificated in any category:

- Model A300 series airplanes, as listed in Airbus Service Bulletin A300–54–071, Revision 1, dated October 15, 1993
- Model A300–600 series airplanes, as listed in Airbus Service Bulletin A300–54–6011, Revision 1, dated October 15, 1993
- Model A310 series airplanes, as listed in Airbus Service Bulletin A310–54–2016, Revision 02, dated June 11, 1999

**Note 1:** This AD applies to each airplane identified in the preceding applicability provision, regardless of whether it has been modified, altered, or repaired in the area subject to the requirements of this AD. For airplanes that have been modified, altered, or repaired so that the performance of the requirements of this AD is affected, the owner/operator must request approval for an alternative method of compliance in accordance with paragraph (e) of this AD. The request should include an assessment of the effect of the modification, alteration, or repair on the unsafe condition addressed by this AD; and, if the unsafe condition has not been eliminated, the request should include specific proposed actions to address it.

*Compliance:* Required as indicated, unless accomplished previously.

To prevent fatigue cracking, which could result in reduced structural integrity of the lower spar of the pylon, accomplish the following:

**Restatement of Certain Requirements of AD 95–10–03**

*Model A300 Series Airplanes*

(a) For Model A300 B4–2C, B2K–3C, B2–203, B4–103, and B4–203 series airplanes: Prior to the accumulation of 9,000 total landings, or within 500 landings after June 12, 1995 (the effective date of AD 95–10–03, amendment 39–9220), whichever occurs later, perform an internal eddy current inspection to detect cracks in the lower spar axis of the pylon between ribs 9 and 10, in accordance with Airbus Industrie Service Bulletin A300–54–071, dated November 12, 1991; or Revision 1, dated October 15, 1993.

(1) If no crack is found, repeat the inspection thereafter at intervals not to exceed 2,500 landings.

(2) If any crack is found that is less than or equal to 30 mm: Perform subsequent inspections and repair in accordance with the methods and times specified in the service bulletin.

(3) If any crack is found that is greater than 30 mm, but less than 100 mm: Prior to the accumulation of 250 landings after crack discovery, repair in accordance with a method approved by the Manager, International Branch, ANM–116, FAA, Transport Airplane Directorate; or the Direction Generale de l'Aviation Civile (DGAC) (or its delegated agent).

(4) If any crack is found that is greater than or equal to 100 mm: Prior to further flight, repair in accordance with a method approved by the Manager, International Branch, ANM–116; or the DGAC (or its delegated agent).

(5) Accomplishment of the modification specified in Airbus Industrie Service Bulletin A300–54–0079, dated October 15, 1993, constitutes terminating action for the inspections required by paragraph (a) of this AD.

*Model A300–600 Series Airplanes*

(b) For Model A300–600 B4–620, C4–620, B4–622R, and B4–622 series airplanes: Except as provided by paragraph (b)(5) of this AD, prior to the accumulation of 4,000 total landings, or within 500 landings after June 12, 1995 (the effective date of AD 95–10–03), whichever occurs later, perform an internal eddy current inspection to detect cracks in the lower spar axis of the pylon between ribs 9 and 10, in accordance with Airbus Industrie Service Bulletin A300–54–6011, dated November 12, 1991, as amended by Service Bulletin Change Notice O.A., dated July 10, 1992; or Revision 1, dated October 15, 1993.

(1) If no crack is found, repeat the inspection thereafter at intervals not to exceed 2,500 landings.

(2) If any crack is found that is less than or equal to 30 mm: Perform subsequent inspections and repair in accordance with

the methods and times specified in the service bulletin.

(3) If any crack is found that is greater than 30 mm, but less than 100 mm: Prior to the accumulation of 250 landings after crack discovery, repair in accordance with a method approved by the Manager, International Branch, ANM–116; or the Direction Generale de l'Aviation Civile (DGAC) (or its delegated agent).

(4) If any crack is found that is greater than or equal to 100 mm: Prior to further flight, repair in accordance with a method approved by the Manager, International Branch, ANM–116; or the DGAC (or its delegated agent).

(5) Accomplishment of the modification specified in Airbus Industrie Service Bulletin A300–54–6019, dated October 15, 1993, increases the threshold and repetitive interval of the inspections required by paragraph (b) of this AD to the threshold and interval specified in paragraph 2.D. of the Accomplishment Instructions of Airbus Industrie Service Bulletin A300–54–6011, Revision 1, dated October 15, 1993.

**New Requirements of This AD**

*Model A310 Series Airplanes*

(c) For Model A310–221, –222, –322, –324, and –325 series airplanes: Perform an internal eddy current inspection to detect cracks in the lower spar axis of the pylon between ribs 9 and 10, in accordance with Airbus Industrie Service Bulletin A310–54–2016, dated November 12, 1991; or Revision 1, dated October 15, 1993; or Revision 2, dated June 11, 1999; at the time specified in paragraph (d) of this AD.

(1) If no crack is found, repeat the inspection thereafter at intervals not to exceed 2,500 landings.

(2) If any crack is found that is less than or equal to 30 mm: Perform subsequent inspections and repair in accordance with the methods and times specified in the service bulletin.

(3) If any crack is found that is greater than 30 mm, but less than 100 mm: Prior to the accumulation of 250 landings after crack discovery, repair in accordance with a method approved by the Manager, International Branch, ANM–116; or the DGAC (or its delegated agent).

(4) If any crack is found that is greater than or equal to 100 mm: Prior to further flight, repair in accordance with a method approved by the Manager, International Branch, ANM–116; or the DGAC (or its delegated agent).

(5) Accomplishment of the modification specified in Airbus Industrie Service Bulletin A310–54–2022, dated October 15, 1993; or Revision 1, dated March 16, 1999; increases the threshold and repetitive interval of the inspections required by paragraph (c) of this AD to the threshold and interval specified in paragraph 2.D. of the Accomplishment Instructions of Airbus Industrie Service Bulletin A310–54–2016, Revision 02, dated June 11, 1999.

(d) Perform the initial inspection required by paragraph (c) of this AD at the earlier of the times specified by paragraphs (d)(1) and (d)(2) of this AD.

(1) Prior to the accumulation of 25,000 total landings, or within 500 landings after June 12, 1995, whichever occurs later.

(2) At the applicable time specified by paragraph (d)(2)(i), (d)(2)(ii), or (d)(2)(iii) of this AD.

(i) For airplanes that have accumulated fewer than 10,000 landings as of the effective date of this AD: Perform the inspection prior to the accumulation of 3,800 total landings, or within 1,500 landings after the effective date of this AD, whichever occurs later.

(ii) For airplanes that have accumulated 10,000 total landings or more, but fewer than 20,000 total landings, as of the effective date of this AD: Perform the inspection within 1,000 landings after the effective date of this AD.

(iii) For airplanes that have accumulated 20,000 total landings or more as of the effective date of this AD: Perform the inspection within 500 landings after the effective date of this AD.

*Alternative Methods of Compliance*

(e) An alternative method of compliance or adjustment of the compliance time that provides an acceptable level of safety may be used if approved by the Manager, International Branch, ANM–116, FAA, Transport Airplane Directorate. Operators shall submit their requests through an appropriate FAA Principal Maintenance Inspector, who may add comments and then send it to the Manager, International Branch, ANM–116.

**Note 2:** Information concerning the existence of approved alternative methods of compliance with this AD, if any, may be obtained from the International Branch, ANM–116.

**Special Flight Permits**

(f) Special flight permits may be issued in accordance with sections 21.197 and 21.199 of the Federal Aviation Regulations (14 CFR 21.197 and 21.199) to operate the airplane to a location where the requirements of this AD can be accomplished.

**Note 3:** The subject of this AD is addressed in French airworthiness directive 1999–237–285(B), dated June 2, 1999.

Issued in Renton, Washington, on April 14, 2000.

**Charles D. Huber,**

*Acting Manager, Transport Airplane Directorate, Aircraft Certification Service.*

[FR Doc. 00–9898 Filed 4–19–00; 8:45 am]

BILLING CODE 4910–13–P

---

## DEPARTMENT OF TRANSPORTATION

## Federal Aviation Administration

## 14 CFR Part 39

**[Docket No. 98–NM–164–AD]**

**RIN 2120–AA64**

## Airworthiness Directives; Airbus Model A300–600 Series Airplanes

**AGENCY:** Federal Aviation Administration, DOT.

**ACTION:** Notice of proposed rulemaking (NPRM).

**SUMMARY:** This document proposes the supersedure of an existing airworthiness directive (AD), applicable to certain Airbus Model A300–600 series airplanes, that currently requires repetitive ultrasonic inspections to detect cracks in the bolt holes inboard and outboard of rib 9 on the bottom booms of the front and rear wing spars, and repair, if necessary. This action would revise the compliance thresholds for the inspection and would require that the inspections be repeated at reduced intervals. This proposal is prompted by issuance of mandatory continuing airworthiness information by a foreign civil airworthiness authority. The actions specified by the proposed AD are intended to prevent fatigue cracks in the bolt holes of the wing spars, which could result in reduced structural integrity of a wing spar.

**DATES:** Comments must be received by May 22, 2000.

**ADDRESSES:** Submit comments in triplicate to the Federal Aviation Administration (FAA), Transport Airplane Directorate, ANM–114, Attention: Rules Docket No. 98–NM–164–AD, 1601 Lind Avenue, SW., Renton, Washington 98055–4056. Comments may be inspected at this location between 9:00 a.m. and 3:00 p.m., Monday through Friday, except Federal holidays.

The service information referenced in the proposed rule may be obtained from Airbus Industrie, 1 Rond Point Maurice Bellonte, 31707 Blagnac Cedex, France. This information may be examined at the FAA, Transport Airplane Directorate, 1601 Lind Avenue, SW., Renton, Washington.

**FOR FURTHER INFORMATION CONTACT:** Norman B. Martenson, Manager, International Branch, ANM–116, FAA, Transport Airplane Directorate, 1601 Lind Avenue, SW., Renton, Washington 98055–4056; telephone (425) 227–2110; fax (425) 227–1149.

**SUPPLEMENTARY INFORMATION:**

**Comments Invited**

Interested persons are invited to participate in the making of the proposed rule by submitting such written data, views, or arguments as they may desire. Communications shall identify the Rules Docket number and be submitted in triplicate to the address specified above. All communications received on or before the closing date for comments, specified above, will be considered before taking action on the proposed rule. The proposals contained

in this notice may be changed in light of the comments received.

Comments are specifically invited on the overall regulatory, economic, environmental, and energy aspects of the proposed rule. All comments submitted will be available, both before and after the closing date for comments, in the Rules Docket for examination by interested persons. A report summarizing each FAA-public contact concerned with the substance of this proposal will be filed in the Rules Docket.

Commenters wishing the FAA to acknowledge receipt of their comments submitted in response to this notice must submit a self-addressed, stamped postcard on which the following statement is made: ''Comments to Docket Number 98–NM–164–AD.'' The postcard will be date stamped and returned to the commenter.

**Availability of NPRMs**

Any person may obtain a copy of this NPRM by submitting a request to the FAA, Transport Airplane Directorate, ANM–114, Attention: Rules Docket No. 98–NM–164–AD, 1601 Lind Avenue, SW., Renton, Washington 98055–4056.

**Discussion**

On March 29, 1995, the FAA issued AD 95–07–05, amendment 39–9187 (60 FR 17990, April 10, 1995), applicable to certain Airbus Model A300–600 series airplanes, to require repetitive ultrasonic inspections to detect fatigue cracks in the bolt holes inboard and outboard of rib 9 on the bottom booms of the front and rear wing spars, and repair, if necessary. That action was prompted by the discovery of fatigue cracks that emanated from the bolt holes inboard and outboard of rib 9 in the bottom booms of the front and rear wing spars. The requirements of that AD are intended to prevent cracks in the bolt holes of the wing spars, which could result in reduced structural integrity of a wing spar.

**Actions Since Issuance of Previous Rule**

Since the issuance of that AD, the Direction Generale de l'Aviation Civile (DGAC), which is the airworthiness authority for France, received a report indicating that, during routine maintenance, a fatigue crack of 3.58 inches (91 millimeters) in length was discovered on the bolt holes of the wing spars on a Model A300 series airplane that had accumulated 29,919 total flight cycles. Investigation revealed that an initial inspection to detect cracks in the bolt holes of the wing spars, in accordance with that AD, had been performed on this airplane at 23,545 total flight cycles. Procedures for this inspection are described in Airbus Service Bulletin A300–57–6039, dated August 1, 1994 (which was referenced in AD 95–07–05 as the appropriate source of service information).

That service bulletin specified an interval not to exceed 9,000 flight cycles for repetitive inspections, which would have resulted in accomplishment of the next inspection on this airplane at 32,545 total flight cycles. Accomplishment of the next inspection at the scheduled compliance time would have allowed the cracking on this airplane to remain undetected for 2,626 flight cycles. Therefore, the DGAC has concluded that the existing repetitive interval for these inspections does not detect such cracking in a timely manner, and advises that the interval should be reduced.

**Explanation of Relevant Service Information**

Subsequent to the finding of this new cracking, Airbus issued Service Bulletin A300–57–6037, Revision 1, dated August 31, 1995. The inspection and repair procedures described in Revision 1 of the service bulletin are essentially identical to those described in the original issue of the service bulletin. However, Revision 1 of the service bulletin reduces the repetitive inspection intervals from 9,000 flight cycles, as specified in the original issue of the service bulletin, to 4,800 flight cycles.

The DGAC classified Revision 1 of this service bulletin as mandatory and issued French airworthiness directive 94–208–169(B)R2, dated October 8, 1997, in order to assure the continued airworthiness of these airplanes in France.

**FAA's Conclusions**

This airplane model is manufactured in France and is type certificated for operation in the United States under the provisions of section 21.29 of the Federal Aviation Regulations (14 CFR 21.29) and the applicable bilateral airworthiness agreement. Pursuant to this bilateral airworthiness agreement, the DGAC has kept the FAA informed of the situation described above. The FAA has examined the findings of the DGAC, reviewed all available information, and determined that AD action is necessary for products of this type design that are certificated for operation in the United States.

**Explanation of Requirements of Proposed Rule**

Since an unsafe condition has been identified that is likely to exist or develop on other airplanes of the same type design registered in the United States, the proposed AD would supersede AD 95–07–05 to continue to require repetitive ultrasonic inspections to detect cracks in the bolt holes inboard and outboard of rib 9 on the bottom booms of the front and rear wing spars, and repair, if necessary. This proposed AD would require that the repetitive inspections be accomplished at a revised threshold and at reduced intervals. The actions would be required to be accomplished in accordance with the service bulletin described previously, except as discussed below.

**Differences Between Proposed Rule and Service Bulletin**

Operators should note that, unlike particular provisions in the service bulletin regarding adjustment of the compliance times using an ''adjustment-for-range'' formula, this proposed AD would not permit formulaic adjustments of the inspection compliance times. The FAA has determined that such adjustments may present difficulties in determining if the applicable inspections and modifications have been accomplished within the appropriate time frame. Further, while such adjustable compliance times are utilized as part of the Maintenance Review Board program, they do not fit practically into the AD tracking process for operators or for Principal Maintenance Inspectors attempting to ascertain compliance with AD's. Therefore, the FAA has determined that fixed compliance times should be specified for accomplishment of the actions required by this AD.

Additionally, after discussions with the DGAC and the manufacturer, the FAA has determined that flight-hour maximums should be included as part of the compliance threshold and repetitive intervals for the inspections required by this proposed AD. Inclusion of a compliance threshold in terms of total flight hours as well as total flight cycles, and requiring inspection at the earlier of those times, will ensure that airplanes with longer-than-average flight times are inspected at a threshold and intervals necessary to maintain safety. Accordingly, the FAA has specified that the initial inspection must be accomplished at the earliest time an airplane reaches certain accumulated total flight cycles or total flight hours, and that repetitive inspections are to be accomplished at intervals not to exceed certain flight cycles or flight hours, whichever occurs first.

The FAA has determined that such revision of the inspection threshold and

reduction of the intervals of the existing AD does not adversely impact any U.S. operators, since no airplanes on the U.S. Register have yet reached those accumulated flight-cycle or flight-hour thresholds.

**Cost Impact**

There are approximately 75 airplanes of U.S. registry that would be affected by this proposed AD.

The inspection that is currently required by AD 95–07–05, and retained in this AD, takes approximately 1 work hour per airplane to accomplish (excluding 10 work hours for access and close-up), at an average labor rate of $60 per work hour. Based on this figure, the cost impact of the currently required inspection on U.S. operators is estimated to be $4,500, or $60 per airplane, per inspection cycle.

The cost impact figure discussed above is based on assumptions that no operator has yet accomplished any of the current or proposed requirements of this AD action, and that no operator would accomplish those actions in the future if this AD were not adopted.

**Regulatory Impact**

The regulations proposed herein would not have a substantial direct effect on the States, on the relationship between the national Government and the States, or on the distribution of power and responsibilities among the various levels of government. Therefore, it is determined that this proposal would not have federalism implications under Executive Order 13132.

For the reasons discussed above, I certify that this proposed regulation (1) is not a ''significant regulatory action'' under Executive Order 12866; (2) is not a ''significant rule'' under the DOT Regulatory Policies and Procedures (44 FR 11034, February 26, 1979); and (3) if promulgated, will not have a significant economic impact, positive or negative, on a substantial number of small entities under the criteria of the Regulatory Flexibility Act. A copy of the draft regulatory evaluation prepared for this action is contained in the Rules Docket. A copy of it may be obtained by contacting the Rules Docket at the location provided under the caption **ADDRESSES.**

**List of Subjects in 14 CFR Part 39**

Air transportation, Aircraft, Aviation safety, Safety.

**The Proposed Amendment**

Accordingly, pursuant to the authority delegated to me by the Administrator, the Federal Aviation Administration proposes to amend part 39 of the Federal Aviation Regulations (14 CFR part 39) as follows:

## PART 39—AIRWORTHINESS DIRECTIVES

1. The authority citation for part 39 continues to read as follows:

**Authority:** 49 U.S.C. 106(g), 40113, 44701.

**§ 39.13 [Amended]**

2. Section 39.13 is amended by removing amendment 39–9187 (60 FR 17990, April 10, 1995), and by adding a new airworthiness directive (AD), to read as follows:

**Airbus Industrie:** Docket 98–NM–164–AD. Supersedes AD 95–07–05, Amendment 39–9187.

*Applicability:* Model A300–600 series airplanes, certificated in any category, on which Airbus Modification 10161 has not been installed in production.

**Note 1:** This AD applies to each airplane identified in the preceding applicability provision, regardless of whether it has been otherwise modified, altered, or repaired in the area subject to the requirements of this AD. For airplanes that have been modified, altered, or repaired so that the performance of the requirements of this AD is affected, the owner/operator must request approval for an alternative method of compliance in accordance with paragraph (c) of this AD. The request should include an assessment of the effect of the modification, alteration, or repair on the unsafe condition addressed by this AD; and, if the unsafe condition has not been eliminated, the request should include specific proposed actions to address it.

*Compliance:* Required as indicated, unless accomplished previously.

To prevent fatigue cracks in the bolt holes of the wing spars, which could result in reduced structural integrity of a wing spar, accomplish the following:

**Ultrasonic Inspections**

(a) Perform an ultrasonic inspection to detect fatigue cracking of the bolt holes inboard and outboard of rib 9 on the bottom booms of the front and rear wing spars, in accordance with Airbus Service Bulletin A300–57–6037, dated August 1, 1994, or Revision 1, dated August 31, 1995, at the applicable time specified in paragraph (a)(1) or (a)(2) of this AD. Repeat the inspection thereafter at intervals not to exceed 4,800 flight cycles or 11,000 flight hours, whichever occurs first.

(1) For airplanes on which Airbus Modification 8842 (reference Airbus Service Bulletin A300–57–6039) has not been installed: Inspect at the earlier of the times specified by paragraphs (a)(1)(i) and (a)(1)(ii) of this AD.

(i) Prior to the accumulation of 17,000 total flight cycles, or within 2,000 flight cycles after May 10, 1995 (the effective date of AD 95–07–05, amendment 39–9187), whichever occurs later.

(ii) Prior to the accumulation of 39,000 total flight hours.

(2) For airplanes on which Airbus Modification 8842 has been installed: Inspect at the earlier of the times specified by paragraphs (a)(2)(i) and (a)(2)(ii) of this AD.

(i) Within 17,000 flight cycles after accomplishment of Airbus Modification 8842, or within 2,000 flight cycles after May 10, 1995, whichever occurs later.

(ii) Within 39,000 flight hours after accomplishment of Airbus Modification 8842.

**Corrective Action**

(b) If any crack is found, prior to further flight, repair in accordance with Airbus Service Bulletin A300–57–6037, dated August 1, 1994, or Revision 1, dated August 31, 1995. Thereafter, perform the repetitive inspections required by paragraph (a) of this AD.

**Alternative Methods of Compliance**

(c) An alternative method of compliance or adjustment of the compliance time that provides an acceptable level of safety may be used if approved by the Manager, International Branch, ANM–116, FAA, Transport Airplane Directorate. Operators shall submit their requests through an appropriate FAA Principal Maintenance Inspector, who may add comments and then send it to the Manager, International Branch, ANM–116.

**Note 2:** Information concerning the existence of approved alternative methods of compliance with this AD, if any, may be obtained from the International Branch, ANM–116.

**Special Flight Permits**

(d) Special flight permits may be issued in accordance with sections 21.197 and 21.199 of the Federal Aviation Regulations (14 CFR 21.197 and 21.199) to operate the airplane to a location where the requirements of this AD can be accomplished.

**Note 3:** The subject of this AD is addressed in French airworthiness directive 94–208–169(B)R2, dated October 8, 1997.

Issued in Renton, Washington, on April 14, 2000.

**Charles D. Huber,**

*Acting Manager, Transport Airplane Directorate, Aircraft Certification Service.*

[FR Doc. 00–9899 Filed 4–19–00; 8:45 am]

BILLING CODE 4910–13–P

---

## DEPARTMENT OF TRANSPORTATION

## Federal Aviation Administration

## 14 CFR Part 39

**[Docket No. 99–SW–81–AD]**

## Airworthiness Directives; Sikorsky Aircraft-manufactured Model CH–54A Helicopters

**AGENCY:** Federal Aviation Administration, DOT.

**ACTION:** Notice of proposed rulemaking (NPRM).

**SUMMARY:** This document proposes the supersedure of an existing airworthiness directive (AD), applicable to Sikorsky Aircraft-manufactured Model CH–54A helicopters, that currently requires initial and recurring inspections and rework or replacement, if necessary, of the second stage lower planetary plate (plate). This action would require the same actions as the existing AD but would add two additional type certificate (TC) holders to the applicability of the AD and change one TC holder who has transferred ownership of the affected helicopters since the issuance of the existing AD. This proposal is prompted by the discovery that the applicability section of the existing AD is incomplete. The actions specified by the proposed AD are intended to prevent failure of the plate due to fatigue cracking which could result in failure of the main gearbox, failure of the drive system, and subsequent loss of control of the helicopter.

**DATES:** Comments must be received on or before June 19, 2000.

**ADDRESSES:** Submit comments in triplicate to the Federal Aviation Administration (FAA), Office of the Regional Counsel, Southwest Region, Attention: Rules Docket No. 99–SW–81–AD, 2601 Meacham Blvd., Room 663, Fort Worth, Texas 76137. You may also send comments electronically to the Rules Docket at the following address: 9-asw-adcomments@faa.gov. Comments may be inspected at the Office of the Regional Counsel between 9:00 a.m. and 3:00 p.m., Monday through Friday, except Federal holidays.

**FOR FURTHER INFORMATION CONTACT:** Uday Garadi, Aviation Safety Engineer, Rotorcraft Standards Staff, Rotorcraft Directorate, FAA, Fort Worth, Texas 76193–0110, telephone (817) 222–5123, fax (817) 222–5961.

**SUPPLEMENTARY INFORMATION:**

## Comments Invited

Interested persons are invited to participate in the making of the proposed rule by submitting such written data, views, or arguments as they may desire. Communications should identify the Rules Docket number and be submitted in triplicate to the address specified above. All communications received on or before the closing date for comments, specified above, will be considered before taking action on the proposed rule. The proposals contained in this notice may be changed in light of the comments received.

Comments are specifically invited on the overall regulatory, economic, environmental, and energy aspects of the proposed rule. All comments submitted will be available, both before and after the closing date for comments, in the Rules Docket for examination by interested persons. A report summarizing each FAA-public contact concerned with the substance of this proposal will be filed in the Rules Docket.

Commenters wishing the FAA to acknowledge receipt of their mailed comments submitted in response to this notice must submit a self-addressed, stamped postcard on which the following statement is made: ''Comments to Docket No. 99–SW–81–AD.'' The postcard will be date stamped and returned to the commenter.

## Availability of NPRMs

Any person may obtain a copy of this NPRM by submitting a request to the FAA, Office of the Regional Counsel, Southwest Region, Attention: Rules Docket No. 99–SW–81–AD, 2601 Meacham Blvd., Room 663, Fort Worth, Texas 76137.

## Discussion

On March 25, 1999, the FAA issued AD 99–07–16, Amendment 39–11102 (64 FR 15669, April 1, 1999), to require initial and recurring inspections and rework or replacement, if necessary, of the plate. Cracks on the plate, part number 6435–20229–102, initiate at and radiate from the lightening holes in the plate web due to fatigue. That action was prompted by cracked plates that were found during overhaul and inspections. The requirements of that AD are intended to prevent failure of the plate due to fatigue cracking, which could result in failure of the main gearbox, failure of the drive system, and subsequent loss of control of the helicopter.

Since the issuance of that AD, the FAA has discovered that two TC holders were inadvertently omitted from the applicability section and one TC holder has transferred the TC for an affected model helicopter.

Since an unsafe condition has been identified that is likely to exist or develop on other Sikorsky Aircraft-manufactured Model CH–54A helicopters of the same type design, the proposed AD would supersede AD 99–07–16 to require initial and recurring inspections and rework or replacement, if necessary, of the plate.

The FAA estimates that 12 helicopters of U.S. registry would be affected by this proposed AD, that it would take approximately 8 work hours per helicopter to accomplish the proposed inspections and 56 hours to remove and replace the plate, and that the average labor rate is $60 per work hour. Required parts would cost approximately $8,000 per helicopter. Based on these figures, the total cost impact of the proposed AD on U.S. operators is estimated to be $142,080 to replace the plates in the entire fleet.

The regulations proposed herein would not have a substantial direct effect on the States, on the relationship between the national Government and the States, or on the distribution of power and responsibilities among the various levels of government. Therefore, it is determined that this proposal would not have federalism implications under Executive Order 13132.

For the reasons discussed above, I certify that this proposed regulation (1) is not a ''significant regulatory action'' under Executive Order 12866; (2) is not a ''significant rule'' under the DOT Regulatory Policies and Procedures (44 FR 11034, February 26, 1979); and (3) if promulgated, will not have a significant economic impact, positive or negative, on a substantial number of small entities under the criteria of the Regulatory Flexibility Act. A copy of the draft regulatory evaluation prepared for this action is contained in the Rules Docket. A copy of it may be obtained by contacting the Rules Docket at the location provided under the caption **ADDRESSES.**

## List of Subjects in 14 CFR Part 39

Air transportation, Aircraft, Aviation safety, Safety.

## The Proposed Amendment

Accordingly, pursuant to the authority delegated to me by the Administrator, the Federal Aviation Administration proposes to amend part 39 of the Federal Aviation Regulations (14 CFR part 39) as follows:

## PART 39—AIRWORTHINESS DIRECTIVES

1. The authority citation for part 39 continues to read as follows:

**Authority:** 49 U.S.C. 106(g), 40113, 44701.

### § 39.13 [Amended]

2. Section 39.13 is amended by removing Amendment 39–11102 (64 FR 15669, April 1, 1999), and by adding a new airworthiness directive (AD), to read as follows:

**Siller Helicopters; Aviation International Rotors, Inc. (Air, Inc); Columbia Helicopters, Inc.; Chet Raspberry, Inc. (CRI); Silver Bay Logging, Inc.:** Docket No. 99–SW–81–AD. Supersedes AD 99–07–16, Amendment 39–11102, Docket No. 97–SW–60–AD.

*Applicability:* Model CH–54A helicopters with lower planetary plate, part number (P/N) 6435–20229–102, installed, certificated in any category.

**Note 1:** This AD applies to each helicopter identified in the preceding applicability provision, regardless of whether it has been otherwise modified, altered, or repaired in the area subject to the requirements of this AD. For helicopters that have been modified, altered, or repaired so that the performance of the requirements of this AD is affected, the owner/operator must request approval for an alternative method of compliance in accordance with paragraph (d) of this AD. The request should include an assessment of the effect of the modification, alteration, or repair on the unsafe condition addressed by this AD; and, if the unsafe condition has not been eliminated, the request should include specific proposed actions to address it.

*Compliance:* Required as indicated, unless accomplished previously.

To prevent failure of the second stage lower planetary plate (plate), P/N 6435–20229–102, due to fatigue cracking, which could lead to failure of the main gearbox, failure of the drive system, and subsequent loss of control of the helicopter, accomplish the following:

(a) On or before accumulating 1,300 hours time-in-service (TIS), conduct a fluorescent magnetic particle inspection of the plate, P/N 6435–20229–102, in the circumferential and longitudinal directions using the wet continuous method. Pay particular attention to the area around the 9 lightening holes.

(1) If any crack is discovered, replace the plate with an airworthy plate prior to further flight.

(2) If no crack is discovered, rework the plate as follows:

(i) Locate the center of each 1.750 inch-diameter lightening hole and machine holes 0.015 to 0.020 oversize on a side (0.030 to 0.040 diameter oversize). Machined surface roughness must not exceed 63 microinches AA rating (see Figure 1).

(ii) Radius each hole 0.030 to 0.050 inches on each edge as shown in Figure 1.

(iii) Mask the top and bottom surfaces of the plate to expose 3.20 inch minimum width circumferential band as shown in Figure 1.

(iv) Vapor blast or bead exposed surfaces to remove protective finish. Use 220 aluminum oxide grit at a pressure of 80 to 90 pounds per square inch.

(v) Shot peen exposed surfaces and inside and edges of lightening holes to 0.008–0.012A intensity. Use cast steel shot, size 170; 200 percent coverage is required. Use the tracer dye inspection method to ensure the required coverage. Also, visually inspect the shot peened surfaces for correct shot peen coverage. Inspect the intensity of the shot by performing an Almen strip height measurement.

(vi) Clean reworked surfaces using acetone. Touch up the reworked areas using Presto Black or an equivalent touchup solution. Ensure that the touchup solution is at a temperature between 70 °F to 120 °F during use. Keep the reworked surfaces wet with touchup solution for 3 minutes to obtain a uniform dark color. Rinse and dry the reworked areas.

(vii) Polish the reworked surfaces with a grade 00 or finer steel wool and polish with a soft cloth. Coat the reworked surfaces with preservative oil.

(viii) Identify the reworked plate by adding ''TS–107'' after the part number using a low-stress depth-controlled impression-stamp with a full fillet depth of not more than 0.003 inch (see Figure 1).

BILLING CODE 4910–13–P

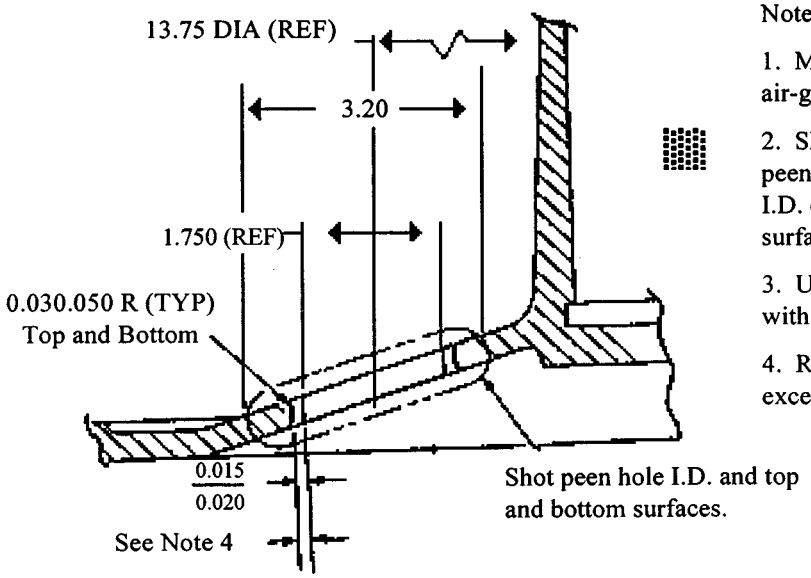


Notes:

1. Mask top and bottom areas to protect from liquid air-grit and shot peen.

2. Shaded area to be liquid air-grit blasted and shot peened includes plate top and bottom surfaces and I.D. of all lightening holes. Feather shot peened surface edges.

3. Use low-stress depth controlled impression-stamp with full fillet depth of no more than 0.003 inch.

4. Reworked machined surface roughness shall not exceed 63 microinches AA rating.

Section B-B

(Typical Nine Places)

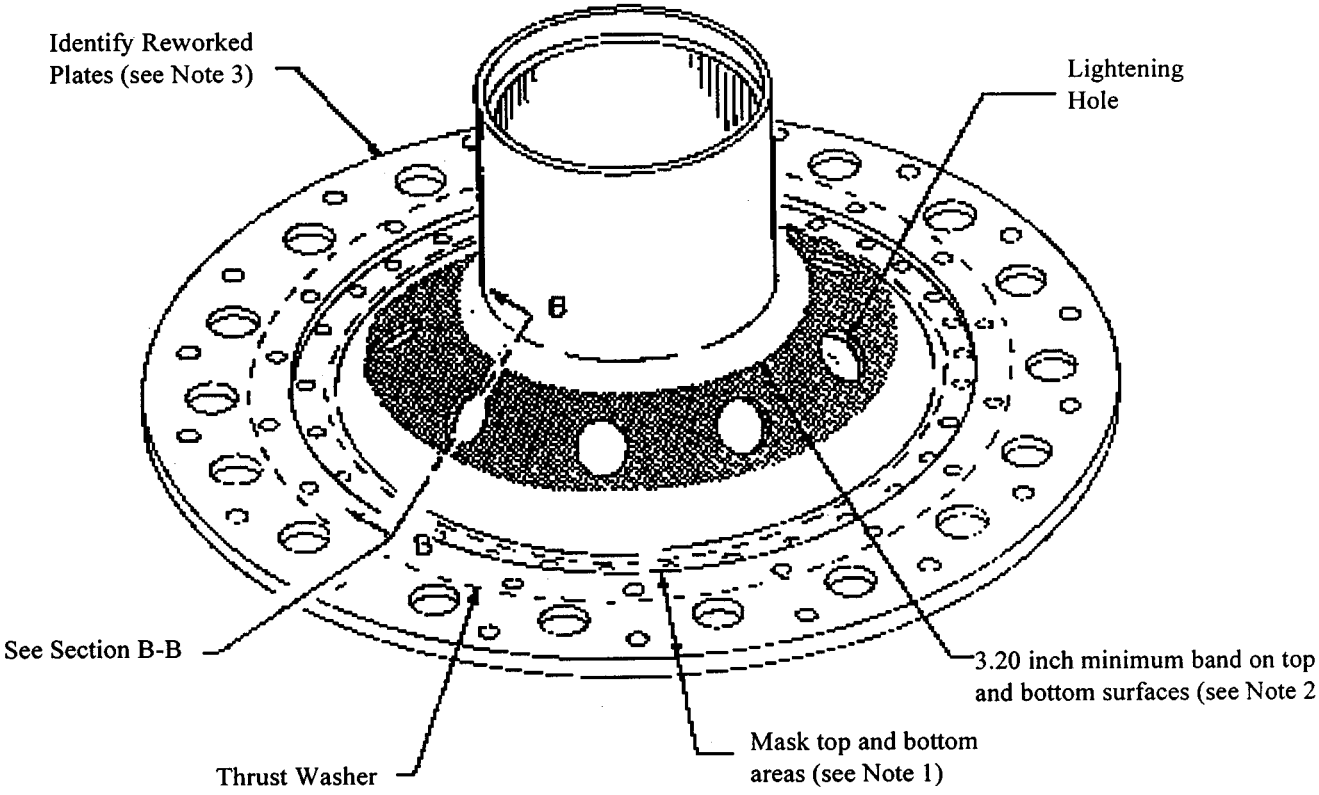


Rework of Second Stage
Lower Planetary Plate (6435-20229-102)
Figure 1

(b) For any plate, P/N 6435–20229–102, that has been reworked and identified with ''TS–107,'' on or before the accumulation of 1,500 hours TIS and thereafter at intervals not to exceed 70 hours TIS, accomplish the following:

(1) Inspect the plate for a crack in the area around all nine lightening holes using a Borescope or equivalent inspection method (see Figure 2).

(2) If a crack is found, replace the plate with an airworthy plate prior to further flight.

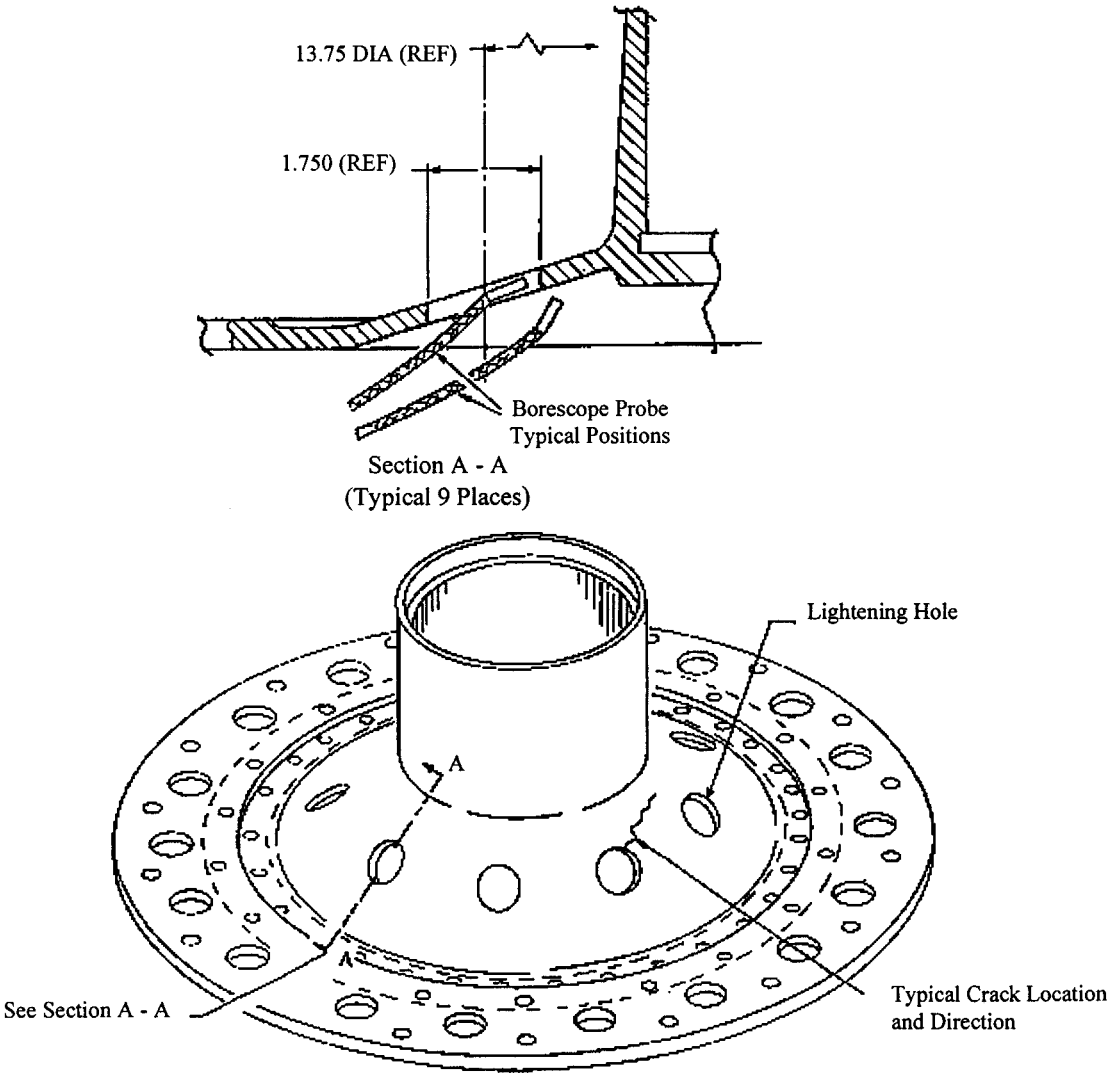


Borescope Inspection of
Second Stage Lower Planetary Plate
Figure 2

BILLING CODE 4910–13–C

(c) On or before the accumulation of 2,600 hours TIS, remove from service plates, P/N 6435–20229–102, reidentified as P/N 6435–20229–102–TS–107 after rework. This AD revises the airworthiness limitation section of the maintenance manual by establishing a retirement life of 2,600 hours TIS for the main gearbox assembly second stage lower planetary plate, P/N 6435–20229–102, reidentified as P/N 6435–20229–102–TS–107 after rework.

(d) An alternative method of compliance or adjustment of the compliance time that provides an acceptable level of safety may be used if approved by the Manager, Rotorcraft Certification Office, Rotorcraft Directorate, FAA. Operators shall submit their requests through an FAA Principal Maintenance Inspector, who may concur or comment and then send it to the Manager, Rotorcraft Certification Office.

**Note 2:** Information concerning the existence of approved alternative methods of compliance with this AD, if any, may be obtained from the Rotorcraft Certification Office.

(e) Special flight permits may be issued in accordance with sections 21.197 and 21.199 of the Federal Aviation Regulations (14 CFR 21.197 and 21.199) to operate the helicopter to a location where the requirements of this AD can be accomplished.

Issued in Fort Worth, Texas, on April 13, 2000.

**Eric Bries,**

*Acting Manager, Rotorcraft Directorate, Aircraft Certification Service.*

[FR Doc. 00–9900 Filed 4–19–00; 8:45 am]

BILLING CODE 4910–13–P

## RAILROAD RETIREMENT BOARD

## 20 CFR Part 349

**RIN 3220–AB25**

## Finality of Decisions Regarding Unemployment and Sickness Insurance

**AGENCY:** Railroad Retirement Board.

**ACTION:** Proposed rule.

**SUMMARY:** The Railroad Retirement Board proposes to adopt regulations pertaining to the finality of decisions under the Railroad Unemployment Insurance Act (Act). The present rules dealing with finality of decisions under that statute are incomplete and are contained in a Board Order which is not readily available to the public. Therefore, the Board has determined that the present rules should be revised and published as a regulation.

**DATES:** Submit comments on or before June 19, 2000.

**ADDRESSES:** Address any comments concerning this proposed rule to the Secretary to the Board, Railroad Retirement Board, 844 North Rush Street, Chicago, Illinois 60611.

**FOR FURTHER INFORMATION CONTACT:** Marguerite P. Dadabo, Senior Attorney, Railroad Retirement Board, (312) 751–4945, TTD (312) 751–4701.

**SUPPLEMENTARY INFORMATION:** The Board's rules and procedures regarding the finality of decisions with respect to benefits under the Railroad Unemployment Insurance Act are presently contained in a Board Order, which is not readily available to the public. Also the Board Order does not contain any time limits on reopening. The proposed regulation addresses the finality of benefit decisions. This proposed rule is similar to part 261 of the Board's regulations on reopening of decisions under the Railroad Retirement Act (20 CFR 261).

Proposed § 349.1 describes who may open a final decision issued by the agency. Proposed § 349.2 describes when a final decision may be reopened. A final decision may be reopened within 12 months of the date of notice of such decision. A final decision may also be reopened within 4 years of the date of notice if new and material evidence is furnished or if the decision was not reasonably consistent with the evidence of record at the time the decision was made. A decision may be reopened at any time if the decision was obtained by fraud or similar fault, or if the decision was that the employee was not a qualified employee and is later found to be one because of a correction in his or her record of compensation, or if the decision was wholly or partially unfavorable to a claimant, but only to correct clerical error or an error that appears on the face of the evidence that was considered when the decision was made. See proposed § 349.2(c).

Proposed § 349.3 provides that a change of legal interpretation or administrative ruling upon which a decision was based is not a basis for reopening.

Proposed § 349.4 provides that a decision may be reopened after the 1 year and 4 year time limits set forth in § 349.2 if the Board had begun an investigation within those time limits. However, if the Board does not diligently pursue the investigation, the agency will not reopen the decision if the decision was favorable to the claimant.

Proposed §§ 349.5–349.7 are procedural and provide that if a decision is reopened, the claimant will be given notice and will have a right to reconsideration and/or a hearing. Any hearing shall be conducted in accordance with part 320 of the Board's regulations (20 CFR 320).

Finally, proposed § 349.8 provides that the three-member Board has the discretion to reopen or not to reopen any decision under these regulations.

The Board, with the concurrence of the Office of Management and Budget, has determined that this is not a significant regulatory action under Executive Order 12866; therefore, no regulatory impact analysis is required. There are no information collections associated with this rule.

### List of Subjects in 20 CFR Part 349

Railroad employees, Railroad unemployment insurance.

For the reasons set out in the preamble, the Railroad Retirement Board proposes to add a new part 349 to 20 CFR Chapter II as follows:

## PART 349—FINALITY OF DECISIONS REGARDING UNEMPLOYMENT AND SICKNESS INSURANCE

Sec.
349.1 Reopening and revising decisions.
349.2 Conditions for reopening.
349.3 Change of legal interpretation or administrative ruling.
349.4 Late completion of timely investigation.
349.5 Notice of revised decision.
349.6 Effect of revised decision.
349.7 Time and place to request a review and/or hearing on revised decision.
349.8 Discretion of the three-member Board to reopen or not to reopen.

**Authority:** 45 U.S.C. 355 and 362(l).

### § 349.1 Reopening and revising decisions.

(a) This part sets forth the Board's rules governing finality of decisions with respect to benefits under the Railroad Unemployment Insurance Act. After the expiration of the time limits for review as set forth in part 320 of this chapter, decisions may be reopened and revised only under the conditions described in this subpart, by the bureau, office or entity that made the earlier decision or by a bureau, office, or other entity at a higher level which has the claim properly before it. Whether a final decision is reopened or not reopened is solely within the discretion of the Board.

(b) A *final decision,* as that term is used in this part, means any decision under § 320.5 of this chapter where the time limit for review, as set forth in part 320 of this chapter or in the Railroad Unemployment Insurance Act, has expired.

(c) *Reopening* a final decision under this part means a conscious determination on the part of the agency to reconsider an otherwise final

decision for purposes of revising that decision.

(d) *New and material evidence,* as that phrase is used in this part, means evidence which was unavailable to the agency at the time the decision was made, and which the claimant could not reasonably have been expected to have submitted at that time.

**§ 349.2 Conditions for reopening.**

A final decision may be reopened:

(a) Within 12 months of the date of the notice of such decision, for any reason;

(b) Within four years of the date of the notice of such decision:

(1) If there is new and material evidence; or

(2) If the decision was not reasonably consistent with the evidence of record at the time of adjudication.

(c) At any time if:

(1) The decision was obtained by fraud or similar fault;

(2) The decision was that the claimant was not a qualified employee, and he or she is now qualified because compensation was credited to the employee's record of compensation in accordance with part 211 of this chapter:

(i) To correct errors apparent on the face of the compensation record;

(ii) To enter items transferred by the Social Security Administration which were credited under the Social Security Act when they should have been credited to the employee's railroad retirement compensation record; or

(iii) To correct errors made in the allocation of earnings to individuals or periods which would have made him or her a qualified employee at the time of the decision if the earnings had been credited to his or her earnings record at that time;

(3) The decision is wholly or partially unfavorable to a claimant, but only to correct a clerical error or an error that appears on the face of the evidence that was considered when the decision was made.

**§ 349.3 Change of legal interpretation or administrative ruling.**

A change of legal interpretation or administrative ruling upon which a decision is based does not render a decision erroneous and does not provide a basis for reopening.

**§ 349.4 Late completion of timely investigation.**

(a) A decision may be revised after the applicable time period in §§ 349.2(a) or (b) expires if the Board begins an investigation into whether to revise the decision before the applicable time period expires and the agency diligently pursues the investigation to the conclusion. The investigation may be based on a request by a claimant or on action by the Board.

(b) *Diligently pursued* for purposes of this section means that in view of the facts and circumstances of a particular case, the necessary action was undertaken and carried out as promptly as the circumstances permitted. Diligent pursuit will be presumed to have been met if the investigation is concluded and, if necessary, the decision is revised within six months from the date the investigation began.

(c) If the investigation is not diligently pursued to its conclusion, the decision will be revised if a revision is applicable and if it is favorable to the claimant. It will not be revised if it would be unfavorable to the claimant.

**§ 349.5 Notice of revised decision.**

(a) When a decision is revised, notice of the revision will be mailed to the parties to the decision at their last known address. The notice will state the basis for the revised decision and the effect of the revision. The notice will also inform the parties of the right to further review.

(b) If a hearings officer or the three-member Board proposes to revise a decision, and the revision would be based only on evidence included in the record on which the prior decision was based, all parties will be notified in writing of the proposed action. If a revised decision is issued by a hearings officer, any party may request that it be reviewed by the three-member Board, or the three-member Board may review the decision on its own initiative.

**§ 349.6 Effect of revised decision.**

A revised decision is binding unless:

(a) The revised decision is being reconsidered or appealed in accord with part 320 of this chapter;

(b) The three-member Board reviews the revised decision; or

(c) The revised decision is further revised consistent with this part.

**§ 349.7 Time and place to request a review and/or hearing on revised decision.**

A party to a revised decision may request, as appropriate, further review of the decision in accordance with the rules set forth in part 320 of this chapter. Further review or a hearing will be held according to the rules set forth in part 320 of this chapter.

**§ 349.8 Discretion of the three-member Board to reopen or not to reopen a final decision.**

In any case in which the three-member Board may deem proper, the Board may direct that any decision, which is otherwise subject to reopening under this part, shall not be reopened or direct that any decision, which is otherwise not subject to reopening under this part, shall be reopened.

Dated: April 11, 2000.

By Authority of the Board.

For the Board,

**Beatrice Ezerski,**

*Secretary to the Board.*

[FR Doc. 00–9860 Filed 4–19–00; 8:45 am]

BILLING CODE 7905–01–P

## DEPARTMENT OF THE TREASURY

## 31 CFR Part 1

## Internal Revenue Service; Privacy Act of 1974, Proposed Implementation

**AGENCY:** Office of the Secretary, Treasury.

**ACTION:** Proposed rule.

**SUMMARY:** In accordance with the requirements of the Privacy Act of 1974, as amended, 5 U.S.C. 552a, the Treasury Department, Internal Revenue Service, gives notice of a proposed amendment to exempt the system of records entitled ''Criminal Investigation Audit Trail Records System—Treasury/IRS 46.051'' from certain provisions of the Privacy Act. The exemption is intended to comply with legal prohibitions against the disclosure of certain kinds of information and to protect certain information on individuals maintained in this system of records.

**DATES:** Comments must be received no later than May 22, 2000.

**ADDRESSES:** Comments should be sent to the Office of Governmental Liaison and Disclosure, Internal Revenue Service, 1111 Constitution Avenue, NW, Washington, DC 20224. Comments will be made available for inspection and copying in the Freedom of Information Reading Room upon request.

**FOR FURTHER INFORMATION CONTACT:** Fu-An Chao, Chief, Systems Development and Support, Criminal Investigation, (202) 622–7803.

**SUPPLEMENTARY INFORMATION:** The Internal Revenue Service's Criminal Investigation Division seeks to establish and maintain the proposed new system of records as a more comprehensive means of performing its responsibilities.

Criminal Investigation carries out many law enforcement related functions. Among Criminal Investigation's principal responsibilities are investigating and referring for prosecution criminal cases, centering largely on violations of tax laws,

including income tax evasion, refund fraud, and other crimes contributing to the federal tax gap. Criminal Investigation also investigates violations of certain money laundering laws.

Many of these law enforcement related functions have been automated and are available on Criminal Investigation computer systems. To ensure the integrity of the system data, audit records are maintained to identify all events that occur while users access or attempt to access the computer system.

The returns and returns information contained within this system constitute investigatory material compiled for law enforcement purposes under Title 26 of the United States Code.

Pursuant to the Privacy Act of 1974, the Department of the Treasury is publishing separately the notice of a new system of records, to be maintained by the Internal Revenue Service.

Under 5 U.S.C. 552a(j)(2) and (k)(2), the head of an agency may promulgate rules to exempt any system of records within the agency from certain provisions of the Privacy Act of 1974 if the system contains investigatory material compiled for law enforcement purposes. The Criminal Investigation Audit Trail Records System—Treasury/IRS 46.051 contains information relating to investigatory material compiled for law enforcement purposes pursuant to 26 U.S.C. 7213, 7213A and 18 U.S.C. 1030(a)(2)(B). Such investigatory material includes: identities of individuals under investigation, identities of potential witnesses, and identities of investigating agents.

The exemptions under 5 U.S.C. 552a(j)(2) and (k)(2), relating to investigatory material are hereby claimed for this system. The Department of the Treasury is hereby giving notice of a proposed rule to exempt this system of records described above from certain provisions of the Privacy Act pursuant to 5 U.S.C. 552a(j)(2) and (k)(2) and authority of 31 CFR 1.23(c). The reasons for exempting this system of records from certain provisions of 5 U.S.C. 552a are set forth below:

(1) 5 U.S.C. 552a(c)(3). This provision of the Privacy Act provides for the release of the disclosure accounting required by 5 U.S.C. 552a(c)(1) and (2) to the individual named in the record at the individual's request. The reasons for exempting the system of records from the foregoing provision are as follows:

(i) The release of disclosure accounting would put the subject of an investigation on notice of the existence of an investigation and that such person is the subject of that investigation;

(ii) Such release of the disclosure accounting would provide the subject of an investigation with an accurate accounting of the date, nature, name and address of the person or agency to whom the disclosure was made. The release of such information to the subject of an investigation would provide the subject with significant information concerning the nature of the investigation and could result in the altering or destruction of documentary evidence, the improper influencing of witnesses, and other activities that could impede or compromise the investigation.

(iii) Release to the individual of the disclosure accounting would alert the individual as to which agencies were investigating this person and the scope of the investigation, and could aid the individual in impeding or compromising investigations by those agencies.

(2) 5 U.S.C. 552a(c)(4), (d)(1), (2), (3), and (4), (e)(4)(G) and (H), (f) and (g). These provisions of the Privacy Act relate to an individual's right to notification of the existence of records pertaining to such individual; requirements for identifying an individual who requests access to records; the agency procedures relating to access to records and the contents of the information contained in such records; and the civil remedies available to the individual in the event of adverse determinations by an agency concerning access to or amendment of information contained in record systems. The reasons for exempting the system of records from the foregoing provisions are as follows: To notify an individual at the individual's request of the existence of records in an investigative file pertaining to such individual or to grant access to an investigative file could interfere with investigative and enforcement proceedings; deprive co-defendants of a right to a fair trial or an impartial adjudication; constitute an unwarranted invasion of the personal privacy of others; disclose the identity of confidential sources and reveal confidential information supplied by such sources; and disclose investigative techniques and procedures.

(3) 5 U.S.C. 552a(e)(4)(I). This provision of the Privacy Act requires the publication of the categories of sources of records in each system of records. In cases where an exemption from this provision has been claimed, the reasons are as follows:

(i) Revealing categories of sources of information could disclose investigative techniques and procedures;

(ii) Revealing categories of sources of information could cause sources who supply information to investigators to refrain from giving such information because of fear of reprisal, or fear of breach of promises of anonymity and confidentiality.

(4) 5 U.S.C. 552a(e)(1). This provision of the Privacy Act requires each agency to maintain in its records only such information about an individual as is relevant and necessary to accomplish a purpose of the agency required to be accomplished by statute or executive order. The reasons for exempting the system of records from the foregoing provision are as follows:

(i) The Internal Revenue Service will limit its inquiries to information which is necessary for the enforcement and administration of tax laws. However, an exemption from the foregoing provision is needed because, particularly in the early stages of an investigation, it is not possible to determine the relevance or necessity of specific information.

(ii) Relevance and necessity are questions of judgment and timing. What appear relevant and necessary when collected may subsequently be determined to be irrelevant or unnecessary. It is only after the information is evaluated that the relevance or necessity of such information can be established with certainty.

(iii) When information is received by the Internal Revenue Service relating to violations of law within the jurisdiction of other agencies, the Internal Revenue Service processes this information through Internal Revenue Service systems in order to forward the material to the appropriate agencies.

(5) 5 U.S.C. 552a(e)(2). This provision of the Privacy Act requires an agency to collect information to the greatest extent practicable directly from the subject individual when the information may result in an adverse determination about an individual's rights, benefits, and privileges under federal programs. The reasons for exempting the system of records from the foregoing provision are as follows:

(i) In certain instances the subject of a criminal investigation cannot be required to supply information to investigators. In those instances, information relating to a subject's criminal activities must be obtained from other sources;

(ii) In a criminal investigation it is necessary to obtain evidence from a variety of sources, other than the subject of the investigation, in order to accumulate and verify the evidence necessary for the successful prosecution of persons suspected of violating criminal laws.

(6) 5 U.S.C. 552a(e)(3). This provision of the Privacy Act requires that an agency must inform the subject of an investigation who is asked to supply information of (A) the authority under which the information is sought and whether disclosure of the information is mandatory or voluntary, (B) the purposes for which the information is intended to be used, (C) the routine uses which may be made of the information, and (D) the effects on the subject, if any, of not providing the requested information. The reasons for exempting the system of records from the foregoing provision are as follows:

(i) The disclosure to the subject of an investigation of the purposes for which the requested information is intended to be used would provide the subject with significant information concerning the nature of the investigation and could result in impeding or compromising the investigation.

(ii) Individuals may be contacted during preliminary information gathering, surveys, or compliance projects concerning the administration of the internal revenue laws before any individual is identified as the subject of an investigation. Informing the individual of the matters required by this provision could impede or compromise subsequent investigations.

(7) 5 U.S.C. 552a(e)(5). This provision of the Privacy Act requires an agency to maintain all records which are used in making any determination about an individual with such accuracy, relevance, timeliness, and completeness as is reasonably necessary to assure fairness to the individual in the determination. The reasons for exempting the system of records from the foregoing provision are as follows: Since the law defines ''maintain'' to include the collection of information, compliance with the foregoing provision would prohibit the initial collection of any data not shown to be accurate, relevant, timely, and complete at the moment of its collection. In gathering information during the course of a criminal investigation, it is not always feasible or possible to determine completeness, accuracy, timeliness, or relevancy prior to collection of the information. Facts are first gathered and then placed into a cohesive order which objectively proves or disproves criminal behavior on the part of a suspect. Seemingly irrelevant, untimely, or incomplete information when gathered may acquire new significance as an investigation progresses. The restrictions of the foregoing provision could impede investigators in the preparation of a complete investigative report.

(8) 5 U.S.C. 552a(e)(8). This provision of the Privacy Act requires an agency to make reasonable efforts to serve notice on an individual when any record on such individual is made available to any person under compulsory legal process when such process becomes a matter of public record. The reasons for exempting the system of records from the foregoing provision are as follows: The notice requirement of the foregoing provision could prematurely reveal the existence of criminal investigations to individuals who are the subjects of such investigations.

The Department of the Treasury has determined that this proposed rule is not a ''significant regulatory action'' under Executive Order 12866.

Pursuant to the requirements of the Regulatory Flexibility Act, 5 U.S.C. 601–612, for the reasons set forth above, it is hereby certified that this rule will not have significant economic impact on a substantial number of small entities.

In accordance with the provisions of the Paperwork Reduction Act of 1995 (44 U.S.C. 3501 *et seq.*), the Department of the Treasury has determined that this proposed rule would not impose new recordkeeping, application, reporting, or other types of information collection requirements.

**List of Subjects in 31 CFR Part 1**

Privacy.

Part 1 of Title 31 of the Code of Federal Regulations is amended as follows:

## Part 1—[Amended]

1. The authority citation for Part 1 continues to read as follows:

**Authority:** 5 U.S.C. 301 and 31 U.S.C. 321. Subpart A also issued under 5 U.S.C. 552a as amended. Subpart C also issued under 5 U.S.C. 552a.

### § 1.36 [Amended]

2. Section 1.36 of Subpart C is amended by adding the following text in numerical order to the table in paragraphs (a)(1) and (b)(1) under the heading THE INTERNAL REVENUE SERVICE

* * * * *

(a) * * *

(1) * * *

| Name of system | No. |
|---|---|
| * * * * * | |
| Criminal Investigation Audit Trail Records System ..... | 46.051 |
| * * * * * | |

* * * * *

(b) * * *

(1) * * *

| Name of system | No. |
|---|---|
| * * * * * | |
| Criminal Investigation Audit Trail Records System ..... | 46.051 |
| * * * * * | |

* * * * *

Dated: March 7, 2000.

**Shelia Y. McCann,**

*Deputy Assistant Secretary (Administration).*

[FR Doc. 00–9869 Filed 4–19–00; 8:45 am]

BILLING CODE 4830–01–P

# Notices

Federal Register
Vol. 65, No. 77
Thursday, April 20, 2000

This section of the FEDERAL REGISTER contains documents other than rules or proposed rules that are applicable to the public. Notices of hearings and investigations, committee meetings, agency decisions and rulings, delegations of authority, filing of petitions and applications and agency statements of organization and functions are examples of documents appearing in this section.

## DEPARTMENT OF COMMERCE

**[Docket No. 991208326–9326–01]**

**RIN 0605–XX06**

## Privacy Act of 1974; Altered System of Records

**AGENCY:** Department of Commerce.

**ACTION:** Notice of amendment of Privacy Act System of Records: Commerce System 14.

**SUMMARY:** In accordance with the Privacy Act (5 U.S.C. 552a(e) (4) and (11), the Department of Commerce is issuing notice of our intent to amend the system of records entitled Commerce Department System 14, ''Litigation, Claims, and Administrative Proceeding Records,'' to add to this system records compiled in conjunction with a newly established complaint procedure for sexual orientation discrimination claims. We invite public comment on the proposed change in this publication.

**DATES:** *Effective Date:* The amendments will become effective May 22, 2000.

*Comment Date:* Written comments must be submitted on or before May 22, 2000.

**ADDRESSES:** Comments may be mailed to Kathryn E. Hawker, Chief, Compliance Division, Office of Civil Rights, U.S. Department of Commerce, Room 7840, 14th & Constitution Avenue, NW, Washington, DC 20230, 202–482–4993.

**SUPPLEMENTARY INFORMATION:** The amendment adds to this system files containing records of claims filed under a new complaint procedure for sexual orientation discrimination claims that will be established by Department Administrative Order. This complaint process is being established to implement Executive Order 11478, as amended by Executive Order 12106, and as further amended by Executive Order 13087 (collectively, the Executive Order). This Executive Order prohibits employment discrimination based on sexual orientation in Federal employment and provides that ''this policy of equal opportunity applies to and must be an integral part of every aspect of personnel policy and practices in the employment, development, advancement, and treatment of civilian employees of the Federal government, to the extent permitted by law.'' The new complaint process provides a mechanism for ensuring that the requirements of the Executive Order are being met throughout the Department.

The Department's sexual orientation process is modeled on the Equal Employment Opportunity (EEO) complaint process. Employees and applicants who believe they have been subject to discrimination based on sexual orientation or related retaliation must first contact an EEO Counselor, who attempts to resolve the issues informally. If the issues are not resolved through counseling, the complainant may file a formal complaint of discrimination with the Department's Office of Civil Rights, which investigates the issues. The Director, Office of Civil Rights issues a final decision on the merits. The Department's Alternative Dispute Resolution Process may be used at any time throughout the complaint process. Final agency decisions may be appealed to the Department's Chief Financial Officer/Assistant Secretary for Administration.

### Classification

This notice is not subject to the notice and comment requirements of the Administrative Procedure Act. 5 U.S.C. 553(a)(2).

This notice is exempt from review under Executive Order 12866.

**Brenda Dolan,**

*Departmental Freedom of Information Act and Privacy Act Officer.*

Accordingly, the Litigation, Claims, and Administrative Proceeding Records system notice originally published at 46 FR 63517, December 31, 1981, is amended by the addition of the following information and updates:

### COMMERCE/DEPT–14

**SYSTEM NAME:**

Litigation, Claims, and Administrative Proceeding Records.

**SYSTEM LOCATION:**

Insert before current paragraph i:

''For matters involving the Department's Sexual Orientation Discrimination Complaint Process: Files containing informal complaint records are maintained by the Bureau EEO Officer. Files containing records of formal complaints are maintained in the Departmental Office of Civil Rights, U.S. Department of Commerce, 14th Street and Constitution Avenue, NW, Room 6010, Washington, DC 20230.

Change current paragraph i. to paragraph j.

**CATEGORIES OF INDIVIDUALS COVERED BY THE SYSTEM: ***

**CATEGORIES OF RECORDS IN THE SYSTEM: ***

**AUTHORITY FOR MAINTENANCE OF THE SYSTEM:**

Add after ''E.O. 10450;': ''E.O. 11478'', as amended.

**ROUTINE USES OF RECORDS MAINTAINED IN THE SYSTEM, INCLUDING CATEGORIES OF USERS AND PURPOSES OF SUCH USES:**

The names, social security numbers, home address and salary may be disclosed to the appropriate federal, state, or local agency responsible for investigating, prosecuting, enforcing, or implementing a statute, rule, regulation, or order, where the disclosing agency becomes aware of an indication of a violation or potential violation of civil or criminal law or regulation; to a congressional office from the record of an individual in response to an inquiry from that congressional office made at the request of that individual; to an authorized appeal grievance examiner, formal complaints examiner, administrative judge, equal employment opportunity investigator, arbitrator or other duly authorized official engaged in investigation or settlement of a grievance, complaint or appeal filed by an employee; in response to a request for discovery or for appearance of a witness, information that is relevant to the subject matter involved in a pending judicial or administrative proceeding.

**POLICIES AND PRACTICES FOR STORING, RETRIEVING, ACCESSING, RETAINING, AND DISPOSING OF RECORDS IN THE SYSTEM:**

**STORAGE:**

Add after ''Paper records in file folders'': ''and electronic records in computer files.

**RETRIEVABILITY:**

Add after ''Files alphabetically by name'': ''or numerically by complaint number.

**SAFEGUARDS:**

After first sentence, add: ''Access to electronic files is limited to those whose official duties require access.''

**RETENTION AND DISPOSAL: ***

**SYSTEM MANAGER(S) AND ADDRESS:**

Add before last paragraph:

''For records at location i.: Chief, Compliance Division, Office of Civil Rights, U.S. Department of Commerce, Washington, DC 20230.''

Change last paragraph as follows: Strike ''e, f and i.:'' and replace with ''e, f, and j.:''

**NOTIFICATION PROCEDURE:**

Strike ''For records at location i.:'' and replace with ''For records at location j.:''

Prior to the above sentence, add:

For records at location i.: Information may be obtained from: Chief, Compliance Division, Office of Civil Rights, U.S. Department of Commerce, Washington, DC 20230.''

**RECORDS ACCESS PROCEDURES: ***

**CONTESTING RECORD PROCEDURES: ***

**RECORD SOURCE CATEGORIES: ***

**SYSTEMS EXEMPTED FROM CERTAIN PROVISIONS OF THE ACT: ***

* No changes are being made.

[FR Doc. 00–9931 Filed 4–19–00; 8:45 am]

**BILLING CODE 3510–BP–P**

## DEPARTMENT OF COMMERCE

### Bureau of Export Administration

### Action Affecting Export Privileges; Thane-Coat, Inc., Jerry Vernon Ford and Preston John Engebretson

In the matters of: Thane-Coat, Inc., 12725 Royal Drive, Stafford, Texas 77477, Jerry Vernon Ford, President, Thane-Coat, Inc., 12725 Royal Drive, Stafford, Texas 77477 and with an address at 7707 Augustine Drive, Houston, Texas 77036, and Preston John Engebretson, Vice-President, Thane-Coat, Inc., 12725 Royal Drive, Stafford, Texas 77477 and with an address at 8903 Bonhomme Road, Houston, Texas 77074, Respondents.

### Decision and Order on Renewal of Temporary Denial Order

On October 13, 1999, I issued a Decision and Order on Renewal of Temporary Denial Order (hereinafter ''Order'' or ''TDO''), renewing for 180 days, in a ''non-standard'' format, a May 5, 1997 Order naming, *inter alia,* Thane-Coat, Inc.; Jerry Vernon Ford, president, Thane-Coat, Inc.; and Preston John Engebretson, vice-president, Thane-Coat, Inc. (hereinafter referred to collectively as the ''Respondents''), as persons temporarily denied all U.S. export privileges. 64 FR 56483–56485 (October 30, 1999). Unless renewed, the Order will expire on April 10, 2000.

On March 20, 2000, pursuant to Section 766.24 of the Export Administration Regulations (currently codified at 15 CFR Parts 730–774 (1999)) (hereinafter the ''Regulations''), issued pursuant to the Export Administration Act of 1979, as amended (50 U.S.C.A. app. §§ 2401–2420 (1991 & Supp. 1999)) (hereinafter the ''Act''),[1] the Office of Export Enforcement, Bureau of Export Administration, United States Department of Commerce (hereinafter ''BXA''), requested that I renew the Order against Thane-Coat, Inc., Jerry Vernon Ford, and Preston John Engebretson for 180 days in a non-standard format, consistent with the terms agreed to by and between the parties in April 1998.

In its request, BXA stated that, as a result of an ongoing investigation, it had reason to believe that, during the period from approximately June 1994 through approximately July 1996, Thane-Coat, Inc., through Ford and Engebretson, and using its affiliated companies, TIC Ltd. and Export Materials, Inc., made approximately 100 shipments of U.S.-origin pipe coating materials, machines, and parts to the Dong Ah Consortium in Benghazi, Libya. These items were for use in coating the internal surface of prestressed concrete cylinder pipe for the Government of Libya's Great Man-Made River Project.[2] Moreover, BXA's investigation gave it reason to believe that the Respondents and the affiliated companies employed a scheme to export U.S.-origin products from the United States, through the United Kingdom, to Libya, a country subject to a comprehensive economic sanctions program, without the authorizations required under U.S. law, including the Regulations. The approximate value of the 100 shipments at issue was $35 million. In addition, the Respondents and the affiliated companies undertook several significant and affirmative actions in connection with the solicitation of business on another phase of the Great Man-Made River Project.

BXA has stated that it believes that the matters under investigation and the information obtained to date in that investigation support renewal of the TDO issued against the Respondents. In that regard, in April 1998, BXA and the Respondents reached an agreement, whereby BXA sought a renewal of the TDO in a ''non-standard'' format, denying all of the Respondents' U.S. export privileges to the United Kingdom, the Bahamas, Libya, Cuba, Iraq, North Korea, Iran, and any other country or countries that may be made subject in the future to a general trade embargo by proper legal authority. In return, the Respondents agreed that, among other conditions, at least 14 days in advance of any export that any of the Respondents intends to make of any item from the United States to any destination world-wide, the Respondents will provide to BXA's Dallas Field Office (i) notice of the intended export, (ii) copies of all documents reasonably related to the subject transaction, including, but not limited to, the commercial invoice and bill of lading, and (iii) the opportunity, during the 14-day notice period, to inspect physically the item at issue to ensure that the intended shipment is in compliance with the Export Administration Act, the Export Administration Regulations, or any order issued thereunder. BXA has sought renewal of the TDO in a ''non-standard'' format; respondents have not opposed renewal of the TDO in the ''non-standard'' format.

Based on BXA's showing, I find that it is appropriate to renew the order temporarily denying the export privileges to Thane-Coat, Inc., Jerry Vernon Ford, and Preston John Engebretson in a ''non-standard'' format, incorporating the terms agreed to by and between the parties in April 1998. I find that such renewal is necessary in the public interest to prevent an imminent violation of the Regulations and to give notice to companies in the United States and abroad to cease dealing with these persons in any commodity, software, or technology subject to the Regulations and exported or to be exported to the United Kingdom, the Bahamas, Libya, Cuba, Iraq, North Korea, Iran, and any other country or countries that may be

[1] The act expired on August 20, 1994. Executive Order 12924 (3 CFR, 1994 Comp. 917 (1995)), extended by Presidential Notices of August 15, 1995 (3 CFR, 1995 Comp. 501 (1996)), August 14, 1996 (3 CFR 1996 Comp. 298 (1997)), August 13, 1997 (3 CFR, 1997 Comp. 306 (1998)), August 13, 1998 (3 CFR, 1998 Comp. 294 (1999)), and August 10, 1999 (64 *Fed. Reg.* 44101, August 13, 1999), continued the Regulations in effect under the International Emergency Economic Powers Act (currently codified at 50 U.S.C.A. §§ 1701–1706 (1991 & Supp. 1999)).

[2] BXA understands that the ultimate goal of this project is to bring fresh water from wells drilled in southeast and southwest Libya through prestressed concrete cylinder pipe to the coastal cities of Libya. This multibillion dollar, multiphase engineering endeavor is being performed by the Dong Ah Construction Company of Seoul, South Korea.

made subject in the future to a general trade embargo by proper legal authority, or in any other activity subject to the Regulations with respect to these specific countries. Moreover, I find such renewal is in the public interest in order to reduce the substantial likelihood that Thane-Coat, Inc., Ford and Engebretson will engage in activities which are in violation of the Regulations.

*Accordingly, it is Therefore Ordered:*

*First,* that Thane-Coat, Inc., 12725 Royal Drive, Stafford, Texas 77477, and all of its successors or assigns, officers, representatives, agents, and employees when acting on its behalf, Jerry Vernon Ford, President, Thane-Coat, Inc., 12725 Royal Drive, Stafford, Texas 77477, and 7707 Augustine Drive, Houston, Texas 77036, and all of his successors, or assigns, representatives, agents and employees when acting on his behalf, and Preston John Engebretson, Vice-President, Thane-Coast, Inc., 12725 Royal Drive, Stafford, Texas 77477 and 8903 Bonhomme Road, Houston, Texas 77074, and all of his successors, or assigns, representatives, agents, and employees when acting on his behalf (all of foregoing parties hereinafter collectively referred to as the ''denied persons''), may not, directly or indirectly, participate in any way in any transaction involving any commodity, software or technology (hereinafter collectively referred to as ''item'') subject to the Export Administration Regulations (hereinafter the ''Regulations'') and exported or to be exported from the United States to the United Kingdom, the Bahamas, Libya, Cuba, Iraq, North Korea, or Iran, or to any other country or countries that may be made subject in the future to a general trade embargo pursuant to proper legal authority (hereinafter the ''Covered Countries''), or in any other activity subject to the Regulations with respect to the Covered Countries, including, but not limited to:

A. Applying for, obtaining, or using any license Exception, or export control document:

B. Carrying or negotiations concerning, or ordering, buying, receiving, using, selling, delivering, storing, disposing of, forwarding, transporting, financing, or otherwise servicing in any way, any transaction involving any item that is subject to the Regulations and that is exported or to be exported from the United States to any of the Covered Countries, or in any other activity subject to the Regulations; or

C. Benefitting in any way from any transaction involving any item exported or to be exported from the United States to any of the Covered Countries that is subject to the Regulations, or in any activity subject to the Regulations.

*Second,* that no person may, directly or indirectly, do any of the following:

A. Export or reexport to or on behalf of any of the denied persons any item subject to the Regulations to any of the Covered Countries.

B. Take any action that facilitates the acquisition, or attempted acquisition by any of the denied persons of the ownership, possession, or control of any item subject to the Regulations that has been or will be exported from the United States to any of the Covered Countries, including financing or other support activities related to a transaction whereby any of the denied persons acquires or attempts to acquire such ownership, possession or control;

C. Take any action to acquire from or to facilitate the acquisition or attempted acquisition from any of the denied persons of any item subject to the Regulations that has been exported from the United States to any of the Covered Countries;

D. Obtain from any of the denied persons in the United States any item subject to the Regulations with knowledge or reason to know that the item will be, or is intended to be, exported from the United States to any of the Covered Countries; or

E. Engage in any transaction to service any item subject to the Regulations that has been or will be exported from the United States to any of the Covered Countries, and which is owned, possessed or controlled by any of the denied persons, or service any item, of whatever origin, that is owned, possessed or controlled by any of the denied persons if such service involves the use of any item subject to the Regulations that has been or will be exported from the United States to any of the Covered Countries. For purposes of this paragraph, servicing means installation, maintenance, repair, modification or testing.

*Third,* that, at least 14 days in advance of any export that any of the denied persons intends to make of any item from the United States to any destination world-wide, the denied person will provide to BXA's Dallas Field Office (i) notice of the intended export, (ii) copies of all documents reasonably related to the subject transaction, including, but not limited to, the commercial invoice and bill of lading, and (iii) the opportunity, during the 14-day notice period, to inspect physically the item at issue to ensure that the intended shipment is in compliance with the Export Administration Act, the Export Administration Regulations, or any order issued thereunder.

*Fourth,* that, after notice and opportunity for comment, as provided in Section 766.23 of the Regulations, any person, firm, corporation, or business organization related to any of the denied persons by affiliation, ownership, control, or position of responsibility in the conduct of trade or related services, may also be made subject to the provisions of this Order.

*Fifth,* that this Order does not prohibit any export, reexport, or other transaction subject to the Regulations where the only items involved that are subject to the Regulations are the foreign-produced direct product of U.S.-origin technology.

*Sixth,* that, in accordance with the provisions of Section 766.24(e) of the Regulations, Thane-Coat, Ford, or Engebretson may, at any time, appeal this Order by filing a full written statement in support of the appeal with the Office of the Administrative Law Judge, U.S. Coast Guard ALJ Docketing Center, 40 South Gay Street, Baltimore, Maryland 21202–4022.

*Seventh,* that this Order is effective immediately and shall remain in effect for 180 days.

*Eighth,* that, in accordance with the provisions of Section 766.24(d) of the Regulations, BXA may seek renewal of this Order by filing a written request not later than 20 days before the expiration date. Any respondent may oppose a request to renew this Order by filing a written submission with the Assistant Secretary for Export Enforcement, which must be received not later than seven days before the expiration date of the Order.

A copy of this Order shall be served on each Respondent and shall be published in the **Federal Register**.

Entered this 10th day of April, 2000.

**F. Amanda DeBusk,**

*Assistant Secretary for Export Enforcement.*

[FR Doc. 00–9861 Filed 4–19–00; 8:45 am]

BILLING CODE 3510–DT–M

## COMMITTEE FOR THE IMPLEMENTATION OF TEXTILE AGREEMENTS

### Adjustment of Import Limits for Certain Cotton and Man-Made Fiber Textile Products Produced or Manufactured in the Philippines

April 14, 2000.

**AGENCY:** Committee for the Implementation of Textile Agreements (CITA).

**ACTION:** Issuing a directive to the Commissioner of Customs adjusting limits.

**EFFECTIVE DATE:** April 20, 2000.

**FOR FURTHER INFORMATION CONTACT:** Naomi Freeman, International Trade Specialist, Office of Textiles and Apparel, U.S. Department of Commerce, (202) 482–4212. For information on the quota status of these limits, refer to the Quota Status Reports posted on the bulletin boards of each Customs port,

call (202) 927–5850, or refer to the U.S. Customs website at http://www.customs.gov. For information on embargoes and quota re-openings, call (202) 482–3715.

**SUPPLEMENTARY INFORMATION:**

**Authority:** Section 204 of the Agricultural Act of 1956, as amended (7 U.S.C. 1854); Executive Order 11651 of March 3, 1972, as amended.

The current limits for certain categories are being adjusted for swing, special shift and carryforward.

A description of the textile and apparel categories in terms of HTS numbers is available in the CORRELATION: Textile and Apparel Categories with the Harmonized Tariff Schedule of the United States (see **Federal Register** notice 64 FR 71982, published on December 22, 1999). Also see 64 FR 54872, published on October 8, 1999.

**D. Michael Hutchinson,**

*Acting Chairman, Committee for the Implementation of Textile Agreements.*

**Committee for the Implementation of Textile Agreements**

April 14, 2000.

Commissioner of Customs,
*Department of the Treasury, Washington, DC 20229.*

Dear Commissioner: This directive amends, but does not cancel, the directive issued to you on October 4, 1999, by the Chairman, Committee for the Implementation of Textile Agreements. That directive concerns imports of certain cotton, wool and man-made fiber textiles and textile products and silk blend and other vegetable fiber apparel, produced or manufactured in the Philippines and exported during the twelve-month period which began on January 1, 2000 and extends through December 31, 2000.

Effective on April 20, 2000, you are directed to adjust the limits for the following categories, as provided for under the Uruguay Round Agreement on Textiles and Clothing:

| Category | Adjusted twelve-month limit [1] |
|---|---|
| Levels in Group I | |
| 237 | 1,891,208 dozen. |
| 338/339 | 2,995,305 dozen. |
| 342/642 | 758,709 dozen. |
| 345 | 199,149 dozen. |
| 347/348 | 3,130,726 dozen. |
| 350 | 140,263 dozen. |
| 351/651 | 864,309 dozen. |
| 361 | 2,414,239 numbers. |
| 369–S [2] | 412,970 kilograms. |
| 633 | 60,765 dozen. |
| 638/639 | 2,541,167 dozen. |
| 643 | 830,517 numbers. |
| 645/646 | 781,263 dozen. |
| 647/648 | 1,553,569 dozen. |
| 847 | 348,433 dozen. |
| Group II | |
| 200–227, 300–326, 332, 359–O [3], 360, 362, 363, 369–O [4], 400–414, 434–438, 440, 442, 444, 448, 459pt. [5], 464, 469pt. [6], 600–607, 613–629, 644, 659–O [7], 666, 669–O [8], 670–O [9], 831, 833–838, 840–846, 850–858 and 859pt. [10], as a group. | 199,230,072 square meters equivalent. |

[1] The limits have not been adjusted to account for any imports exported after December 31, 1999.

[2] Category 369–S: only HTS number 6307.10.2005.

[3] Category 359–O: all HTS numbers except 6103.42.2025, 6103.49.8034, 6104.62.1020, 6104.69.8010, 6114.20.0048, 6114.20.0052, 6203.42.2010, 6203.42.2090, 6204.62.2010, 6211.32.0010, 6211.32.0025, 6211.42.0010 (Category 359–C); and 6406.99.1550 (Category 359pt.).

[4] Category 369–O: all HTS numbers except 6307.10.2005 (Category 369–S); 5601.10.1000, 5601.21.0090, 5701.90.1020, 5701.90.2020, 5702.10.9020, 5702.39.2010, 5702.49.1020, 5702.49.1080, 5702.59.1000, 5702.99.1010, 5702.99.1090, 5705.00.2020 and 6406.10.7700 (Category 369pt.).

[5] Category 459pt.: all HTS numbers except 6405.20.6030, 6405.20.6060, 6405.20.6090, 6406.99.1505 and 6406.99.1560.

[6] Category 469pt.: all HTS numbers except 5601.29.0020, 5603.94.1010 and 6406.10.9020.

[7] Category 659–O: all HTS numbers except 6103.23.0055, 6103.43.2020, 6103.43.2025, 6103.49.2000, 6103.49.8038, 6104.63.1020, 6104.63.1030, 6104.69.1000, 6104.69.8014, 6114.30.3044, 6114.30.3054, 6203.43.2010, 6203.43.2090, 6203.49.1010, 6203.49.1090, 6204.63.1510, 6204.69.1010, 6210.10.9010, 6211.33.0010, 6211.33.0017, 6211.43.0010 (Category 659–C); 6502.00.9030, 6504.00.9015, 6504.00.9060, 6505.90.5090, 6505.90.6090, 6505.90.7090, 6505.90.8090 (Category 659–H); 6406.99.1510 and 6406.99.1540 (Category 659pt.).

[8] Category 669–O: all HTS numbers except 6305.32.0010, 6305.32.0020, 6305.33.0010, 6305.33.0020, 6305.39.0000 (Category 669–P); 5601.10.2000, 5601.22.0090, 5607.49.3000, 5607.50.4000 and 6406.10.9040 (Category 669pt.).

[9] Category 670–O: all HTS numbers except 4202.12.8030, 4202.12.8070, 4202.92.3020, 4202.92.3031, 4202.92.9026 and 6307.90.9907 (Category 670–L).

[10] Category 859pt.: only HTS numbers 6115.19.8040, 6117.10.6020, 6212.10.5030, 6212.10.9040, 6212.20.0030, 6212.30.0030, 6212.90.0090, 6214.10.2000 and 6214.90.0090.

The Committee for the Implementation of Textile Agreements has determined that these actions fall within the foreign affairs exception to the rulemaking provisions of 5 U.S.C. 553(a)(1).

Sincerely,

**D. Michael Hutchinson,**

*Acting Chairman, Committee for the Implementation of Textile Agreements.*

[FR Doc. 00–9876 Filed 4–19–00; 8:45 am]

BILLING CODE 3510–DR–F

## COMMITTEE FOR THE IMPLEMENTATION OF TEXTILE AGREEMENTS

### Adjustment of Import Restraint Limits for Certain Cotton, Man-Made Fiber, Silk Blend and Other Vegetable Fiber Textiles and Textile Products Produced or Manufactured in Thailand

April 14, 2000.

**AGENCY:** Committee for the Implementation of Textile Agreements (CITA).

**ACTION:** Issuing a directive to the Commissioner of Customs adjusting limits.

**EFFECTIVE DATE:** April 20, 2000.

**FOR FURTHER INFORMATION CONTACT:** Ross Arnold, International Trade Specialist, Office of Textiles and Apparel, U.S. Department of Commerce, (202) 482–4212. For information on the quota status of these limits, refer to the Quota Status Reports posted on the bulletin boards of each Customs port, call (202) 927–5850, or refer to the U.S. Customs website at http://www.customs.gov. For information on embargoes and quota re-openings, call (202) 482–3715.

**SUPPLEMENTARY INFORMATION:**

**Authority:** Section 204 of the Agricultural Act of 1956, as amended (7 U.S.C. 1854); Executive Order 11651 of March 3, 1972, as amended.

The current limits for certain categories are being reduced for carryforward used. The current limits are being increased in Categories 340 and 347/348/847 for the recrediting of unused carryforward.

A description of the textile and apparel categories in terms of HTS numbers is available in the CORRELATION: Textile and Apparel Categories with the Harmonized Tariff Schedule of the United States (see **Federal Register** notice 64 FR 71982, published on December 22, 1999). Also see 64 FR 68336, published on December 7, 1999.

**D. Michael Hutchinson,**

*Acting Chairman, Committee for the Implementation of Textile Agreements.*

Committee for the Implementation of Textile Agreements

April 14, 2000.

Commissioner of Customs,
*Department of the Treasury, Washington, DC*

*20229.*

Dear Commissioner: This directive amends, but does not cancel, the directive issued to you on December 1, 1999, by the Chairman, Committee for the Implementation of Textile Agreements. That directive concerns imports of certain cotton, wool, man-made fiber, silk blend and other vegetable fiber textiles and textile products, produced or manufactured in Thailand and exported during the period which began on January 1, 2000 and extends through December 31, 2000.

Effective on April 20, 2000, you are directed to adjust the limits for the following categories, as provided for under the Uruguay Round Agreement on Textiles and Clothing:

| Category | Adjusted twelve-month limit [1] |
|---|---|
| Sublevels in Group II | |
| 336/636 | 361,721 dozen. |
| 338/339 | 2,111,579 dozen |
| 340 | 322,012 dozen. |
| 347/348/847 | 940,539 dozen. |
| 638/639 | 2,503,210 dozen. |
| 647/648 | 1,294,991 dozen |

[1] The limits have not been adjusted to account for any imports exported after December 31, 1999.

The Committee for the Implementation of Textile Agreements has determined that these actions fall within the foreign affairs exception to the rulemaking provisions of 5 U.S.C. 553(a)(1).

Sincerely,

**D. Michael Hutchinson,**

*Acting Chairman, Committee for the Implementation of Textile Agreements.*

[FR Doc. 00–9875 Filed 4–19–00; 8:45 am]

BILLING CODE 3510–DR–F

## DEPARTMENT OF DEFENSE

### Department of the Air Force

### Notice of Intent to Grant an Exclusive Patent License

Pursuant to the provisions of Part 404 of Title 37, Code of Federal Regulations, which implements Public Law 96–517, the Department of the Air Force announces its intention to grant SMJ Carbon Technology, a company doing business in Nashua, New Hampshire (NH) an exclusive license in any right, title and interest the Air Force has in U.S. Patent Application entitled ''CARBON AND CERMAIC MATRIX COMPOSITES FABRICATED BY A RAPID AND LOW-COST PROCESS INCORPORATING IN-SITU POLYMERIZATION OF WETTING MONOMERS.'' The inventors, Phillip G. Wapner, Wesley P. Hoffman and Steven Jones were all government employees at the time of the invention. The invention was filed in the U.S. Patent and Trade Office on June 8, 1998.

The license described above will be granted unless an objection thereto, together with a request for an opportunity to be heard, if desired, is received in writing by the addressee set forth below within 60 days from the date of publication of this Notice. Information concerning the application may be obtained, on request, from the same addressee.

All communications concerning this Notice should be sent to Mr. Randy Heald, Associate General Counsel (Acquisition), SAF/GCQ, 1500 Wilson Blvd., Suite 304, Arlington, VA 22209–2310. Mr. Heald can be reached at 703–588–5091 or by fax at 703–588–8037.

**Janet A. Long,**

*Air Force Federal Register Liaison Officer.*

[FR Doc. 00–9862 Filed 4–19–00; 8:45 am]

BILLING CODE 5001–05–P

## DEPARTMENT OF ENERGY

### Energy Information Administration

### Agency Information Collection Activities: Proposed Collection, Comment Request

**AGENCY:** Energy Information Administration, DOE.

**ACTION:** Agency information collection activities: Proposed collection, comment request.

**SUMMARY:** The Energy Information Administration (EIA) is soliciting comments concerning proposed revisions and three-year extensions to the Oil and Gas Reserves Survey Forms EIA–23, EIA–23P and EIA–64A. Titles of these forms are ''Annual Survey of Domestic Oil and Gas Reserves'' (EIA–23), ''Oil and Gas Well Operator List Update Report'' (EIA–23P), and ''Annual Report of the Origin of Natural Gas Liquids Production'' (EIA–64A), respectively.

**DATES:** Written comments must be submitted on or before June 19, 2000. If you anticipate difficulty in submitting comments within that period, contact the person listed below as soon as possible.

**ADDRESSES:** Send comments to Rafi Zeinalpour, U.S. Department of Energy, Energy Information Administration, Reserves and Production Division, 1999 Bryan Street, Suite 1110, Dallas, Texas 75201–6801. Alternatively, Rafi Zeinalpour may be reached by phone at (214) 720–6191, at the e-mail address of rzeinalp@eia.doe.gov or by FAX at (214) 720–6155.

**FOR FURTHER INFORMATION CONTACT:** Requests for additional information or copies of the forms and instructions should be directed to Rafi Zeinalpour at the address listed above.

**SUPPLEMENTARY INFORMATION:**

I. Background
II. Current Actions
III. Request for Comments

### I. Background

The Federal Energy Administration Act of 1974 (Pub. L. No. 93–275, 15 U.S.C. 761 *et seq.*) and the Department of Energy Organization Act (Pub. L. No. 95–91, 42 U.S.C. 7101 *et seq.*) require the Energy Information Administration (EIA) to carry out a centralized, comprehensive and unified energy information program. This program collects, evaluates, assembles, analyzes and disseminates information on energy resource reserves, production, demand, technology and related economic and statistical information. This information is used to assess the adequacy of energy resources to meet near and longer-term domestic demands.

The EIA, as part of its effort to comply with the Paperwork Reduction Act of 1995 (Pub. L. 104–13, 44 U.S.C. Chapter 35), provides the general public and other Federal agencies with opportunities to comment on collections of energy information conducted by or in conjunction with the EIA. Any comments received help the EIA to prepare data requests that maximize the utility of the information collected and to assess the impact of collection requirements on the public. Also, the EIA will later seek approval by the Office of Management and Budget (OMB) of the collections under Section 3507(h) of the Paperwork Reduction Act of 1995.

Operators of crude oil and natural gas wells are the target respondents of Forms EIA–23 and EIA–23P. The amount of crude oil, associated-dissolved natural gas, non-associated natural gas and lease condensate production and reserves by individual field are requested of large and intermediate size producers on Form EIA–23. A sample of small operators are required to submit less detailed information on a different version of the form and the majority of small operators are not asked to report annually on Form EIA–23. The selected sample of small operators provide production and available reserves information for crude oil, natural gas and lease condensate at a State or geographic sub-division level on the Form EIA–23. Form EIA–23P is a postcard form used to collect information on possible oil and gas well operators that may be included in future EIA–23 surveys. Information obtained

from Form EIA–23P is used to confirm and/or update general operator information, primarily about small companies with which no contact has been made in the last few years.

Operators of natural gas plants are the target respondents of the Form EIA–64A. The amount of natural gas processed, natural gas liquids produced, resultant shrinkage of the natural gas and natural gas used in processing are requested of all natural gas plant operators.

In response to Public Law 95–91 Section 657, estimates of U.S. oil and gas reserves are to be reported annually. These estimates are essential to the development, implementation and evaluation of energy policy and legislation. Data are used directly in the EIA annual publication, U.S. Crude Oil, Natural Gas and Natural Gas Liquids Reserves, and are incorporated in a number of other publications and analyses. Secondary publications which use the data include EIA's Annual Energy Review, Annual Energy Outlook, Petroleum Supply Annual and Natural Gas Annual.

**II. Current Actions**

This notice is for a proposed three-year extension of Form EIA–23, ''Annual Survey of Domestic Oil and Gas Reserves'', Form EIA–23P, ''Oil and Gas Well Operator List Update Report'', and Form EIA–64A, ''Annual Report of the Origin of Natural Gas Liquids Production'', until December 31, 2003. Form EIA–23P will be extended without modification. Currently available reliable State sources will be used to confirm and/or update operator information thereby reducing the number of Form EIA–23P mail-outs and thus the burden on respondents.

More efficient utilization of space on Form EIA–64A is proposed by reducing the number of available lines for sources of the natural gas and increasing the number of available lines for explanatory notes and comments. This change should allow for more complete information and a reduction in paper attachments.

Modifications to the Schedule A Form (field level detailed report) and the information collected on Form EIA–23 are proposed. First, a single page will now contain information on three individual fields instead of data on four fields as shown on the current form. This will increase the readability and the ease of manually completing this form.

Second, information on two additional reserves classifications will be requested from individual large and intermediate sized operators. These additions are the gross operated volumes of reserves sold and/or acquired by these companies during the survey year. This information should be readily available, since in the majority of cases, for companies selling properties this should be the same volume of reserves as those reported on the previous year's survey as year-end reserves. For companies acquiring properties, these gross reserves volumes would be the same as those determined during the evaluation process prior to the acquisition. The reserves volumes for sold and acquired properties will also provide a more complete understanding of the sources of growths and reductions in reserves and an independent evaluation of the gross annual volumes of reserves under new operators. These modifications to Form EIA–23 are also anticipated to reduce the reporting burden time for the large and intermediate operators.

The format for Form EIA–23, Schedule A, will be revised first to include these two new classifications and also to allow the reporting of production from wells without available values of reserves in the same location on the form as production from wells with available values of reserves. Reporting all production information in the same location should increase the accuracy of the data and the efficiency of completing the form. The form location for reporting proved non-producing reserves will be moved to the location previously used for reporting production associated with wells without available values of reserves. As a result of this move, the location of the total values of reserves will now be at the end of the rows on the Form EIA–23. These changes should increase data accuracy and reduce both confusion and the time required to complete the form.

On the Form EIA–23, Summary Report, which is completed by small operators, two changes are proposed. First, the form would not have the State and/or geographic sub-divisions preprinted. Instead, the operator would identify and enter on the form all areas in which they have operated properties. This will eliminate one page of the report and increase the accuracy and readability of the information. Additionally, the lines for data entry have been expanded to allow for easier manual input. The units for reporting crude oil, natural gas and lease condensate production and reserves would also be changed from thousands of barrels and millions of cubic feet units to barrels and thousands of cubic feet, which is more routinely used by small operators. This should increase accuracy and eliminate rounding errors for the small operators.

Many U.S. government agencies have an interest in the definitions of proved oil and gas reserves and the quality, reliability and usefulness of estimates of reserves. Among these are the Energy Information Administration (EIA), Department of Energy; Minerals Management Service (MMS), Department of Interior; Internal Revenue Service (IRS), Department of the Treasury; and the Securities and Exchange Commission (SEC). Each of these organizations has specific purposes for collecting, using or estimating proved reserves. The EIA has a congressional mandate to provide accurate annual estimates of U.S. proved crude oil, natural gas and natural gas liquids reserves and publishes an annual reserves report to meet this requirement. The MMS is second only to the IRS in generating Federal revenue. The MMS maintains estimates of proved reserves to carry out their responsibilities in leasing, collecting royalty payments and regulating the activities of oil and gas companies on Federal lands and water. For the IRS, proved reserves and occasionally probable reserves are an essential component of calculating taxes for companies owning or producing oil and gas. The SEC requires publicly traded petroleum companies to annually file a reserves statement as part of their 10–K filing. The basic purpose of the 10–K filing is to give the investing public a clear and reliable financial basis to assess the relative value, as a financial asset, of a company's reserves, especially in comparison to other similar oil and gas companies.

The Society of Petroleum Engineers (SPE) adopted new oil and gas reserves definitions in March 1997 for the three categories of proved, probable and possible reserves. The SPE is an international organization of petroleum engineers with 50,000 members worldwide. The World Petroleum Congresses (WPC) ratified the same definitions in October 1996 and is a co-sponsor of the definitions. These definitions were thoroughly discussed and reviewed for several years prior to adoption by the WPC. The EIA, through its observer's position on the committee, strongly supported the adoption of the new SPE/WPC definitions. Consequently, the EIA has recently adopted the SPE/WPC definitions. This action has been somewhat delayed, however, in order to allow time for all major U.S. government agencies having a significant interest in proved oil and gas reserves to adopt the new definitions concurrently. The MMS has

adopted and currently uses the new SPE/WPC definitions and these definitions are fundamentally consistent with IRS usage. The SEC has had extensive dialogue starting in 1997 with the EIA, petroleum industry and investment community on the new SPE/WPC definitions. The SEC has yet to reach a decision to modify their definitions or to adopt the SEC definitions to be more consistent with the SPE/WPC definitions. The dialogue will continue. The EIA, SPE, WPC and the SEC all recognize that definitions of proved reserves are not static and will continue to evolve over time.

These new definitions contain at least two major changes from the previous SPE definitions adopted in 1987. First, *probabilistic* calculation techniques (i.e., a range of reserves estimates with uncertainties associated with each level of reserve estimates) were accepted as valid methods of estimating proved reserves along with the traditional *deterministic* techniques (i.e., a discrete reserve estimate with an associated level of certainty). Second, the use of an oil or gas price averaged over a longer historical period of time, typically one year, rather than the price listed on a single day was recommended in the SPE/WPC definitions to be consistent with the purpose of economic estimation of reserves.

The EIA believes that allowing and accepting probabilistic estimates of reserves is both state-of-the-art and a means for improving the understanding of proved reserves The EIA expects that most filers will continue to utilize the deterministic methodology to determine reserves but will accept probabilistic estimates when appropriate. Reserves calculated using any type of evaluation methodology rely upon the skill, integrity and judgment of the evaluator and require an ample amount of reliable data.

The EIA also believes that using an average annual price for oil and gas rather than a so called ''market price'' on December 31 of the reporting year as the SEC currently requires, will lead to more reliable proved reserves estimates, as well as more meaningful estimates of those reserves' economic value. Estimating reserves requires consideration of both technical and economic components. In 1998, U.S. proved reserves of crude oil registered the largest percentage decline in 53 years. The annualized oil price decline from $17.40 per barrel in 1997 to $10.88 per barrel in 1998 had a significant impact on proved reserves. Moreover, using end of year prices [$15.04 per barrel in December 1997 to $8.03 in December 1998], further exacerbated the reduction in proved reserves for most producers and for the nation. As the oil price falls, each additional dollar decline has a proportionally larger negative impact on the reported volume of proved reserves.

The adoption of these new definitions of proved reserves by the EIA will not require respondents to change the way they report information on Form EIA–23.

Respondents should use the same methods when estimating reserves for the EIA as they do for the SEC. If there is an apparent conflict in requirements and assumptions, give precedence to the methods used for the SEC.

Operators should note in the footnotes whether end of year or annual average prices were used and whether probabilistic or deterministic methods were utilized at the field level.

## III. Request for Comments

Prospective respondents and other interested parties should comment on the actions discussed in Item II. The following guidelines are provided to assist in the preparation of comments. Please indicate to which form(s) your comments apply.

*General Issues*

A. Is the proposed collection of information necessary for the proper performance of the functions of the agency and does the information have practical utility? Practical utility is defined as the actual usefulness of information to or for an agency, taking into account its accuracy, adequacy, reliability, timeliness and the agency's ability to process the information it collects.

B. What enhancements can be made to the quality, utility and clarity of the information to be collected?

*As a Potential Respondent*

A. Are the instructions and definitions clear and sufficient? If not, which instructions need clarification?

B. Can the information be submitted by the due date?

C. Public reporting burden for this collection is estimated to average 4 hours for small operators, 32 hours for intermediate operators, and 160 hours for large operators on Form EIA–23. In addition, proposed Form EIA–23 modifications are anticipated to reduce these reporting burden estimates for intermediate operators by 4 hours and for large operators by 16 hours. For operators reporting on Form EIA–23P, reporting burden is estimated at 15 minutes. For natural gas plant operators reporting on Form EIA–64A, the reporting burden is estimated at 6 hours. The estimated burden includes the total time, effort or financial resources expended to generate, maintain, retain, disclose and provide the information. Please comment on the accuracy of the burden estimates.

D. The agency estimates that the only costs to the respondents are for the time it will take them to complete the collection. Please comment if respondents will incur start-up costs for reporting or any recurring annual costs for operation, maintenance and purchase of services associated with the information collection.

E. What additional actions could be taken to minimize the burden of this collection of information? Such actions may involve the use of automated, electronic, mechanical or other technological collection techniques or other forms of information technology.

F. Does any other Federal, State or local agency collect similar information? If so, specify the agency, the data element(s) and the methods of collection.

*As a Potential User*

A. Is the information useful at the levels of detail indicated on the form?

B. For what purpose(s) would the information be used? Be specific.

C. Are there alternate sources for the information and are they useful? If so, what are their weaknesses and/or strengths?

Comments submitted in response to this notice will be summarized and/or included in the request for OMB approval of the form. These comments will also become a matter of public record.

**Statutory Authority:** Section 3506 (c)(2)(A) of the Paperwork Reduction Act of 1995 (Pub. L. No. 104–13, 44 U.S.C. Chapter 35).

Issued in Washington, DC, April 14, 2000.

**Jay H. Casselberry,**

*Agency Clearance Officer, Statistics and Methods Group, Energy Information Administration.*

[FR Doc. 00–9912 Filed 4–19–00; 8:45 am]

BILLING CODE 6450–01–P

---

## DEPARTMENT OF ENERGY

## Federal Energy Regulatory Commission

**[Docket No. ER00–1816–001]**

## DTE-River Rouge No. 1, L.L.C.; Notice of Filing

April 14, 2000.

Take notice that on April 12, 2000, DTE-River Route No. 1, L.L.C. tendered for filing a response to Staff's deficiency

letter issued in this docket on April 7, 2000 and a revised FERC Electric Tariff, Original Volume No. 1.

Copies of the filing were served upon parties to the above-captioned proceeding and the Michigan Public Service Commission.

Any person desiring to be heard or to protest such filing should file a motion to intervene or protest with the Federal Energy Regulatory Commission, 888 First Street, NE., DC 20426, in accordance with Rules 211 and 214 of the Commission's Rules of Practice and Procedure (18 CFR 385.211 and 385.214). All such motions and protests should be filed on or before April 24, 2000. Protests will be considered by the Commission to determine the appropriate action to be taken, but will not serve to make protestants parties to the proceedings. Any person wishing to become a party must file a motion to intervene. Copies of this filing are on file with the Commission and are available for public inspection. This filing may also be viewed on the Internet at http://www.ferc.fed.us/online/rims.htm (call 202–208–2222 for assistance).

**David P. Boergers,**

*Secretary.*

[FR Doc. 00–9913 Filed 4–19–00; 8:45 am]

BILLING CODE 6717–01–M

## DEPARTMENT OF ENERGY

### Federal Energy Regulatory Commission

**[Docket No. RP00–245–000]**

### East Tennessee Natural Gas Company; Notice of Proposed Changes in FERC Gas Tariff

April 14, 2000.

Take notice that on April 12, 2000, East Tennessee Natural Gas Company (East Tennessee) tendered for filing as part of its FERC Gas Tariff, Second Revised Volume No. 1, the tariff sheets listed in Appendix A to the filing, to be effective May 1, 2000:

East Tennessee states that, on March 14, 2000, East Tennessee was acquired from El Paso Energy (El Paso) and became a wholly owned subsidiary of Duke Energy Corporation (Duke). East Tennessee states that, pursuant to the Stock Purchase Agreement, El Paso entered into a Transition Agreement to ensure the smooth operation of the East Tennessee pipeline system for a period of up to nine months from the closing date (transition period). Among other things, the Transition Agreement requires El Paso to perform certain capacity management activities on behalf of East Tennessee for the daily operations of the system during the transition period.

East Tennessee states that, as part of El Paso's transition to interactive Internet communications in compliance with the Commission's Order No. 587-I, El Paso has undertaken a major rewrite of its pipelines' critical computer system functions (the ''PASSKEY'' system). El Paso has advised Duke that it intends to complete the move to the Internet by May 1, 2000. East Tennessee states that, because El Paso will be performing certain capacity management activities for East Tennessee utilizing the PASSKEY System during the transition period, East Tennessee is modifying its existing tariff and pro forma service agreements to reflect the system and tariff changes made by the El Paso pipelines.

East Tennessee states that the purpose of this filing is to obtain Commission approval for the tariff modifications in East Tennessee's tariff mirroring the El Paso pipelines' proposals in order to implement the PASSKEY System rewrite and the Service Upgrades by May 1, 2000 for the duration of the transition period and to update East Tennessee's mailing addresses and contact information as a result of the acquisition by Duke. At the end of the transition period, East Tennessee will file revised tariff sheets to reflect the end of the transition period and the implementation of the LINKr System for East Tennessee, and will make any additional changes necessary to conform the operations of the East Tennessee pipeline system with those of the other Duke pipelines.

East Tennessee states that copies of its filing have been mailed to all affected customers and interested state commissions.

Any person desiring to be heard or to protest said filing should file a motion to intervene or a protest with the Federal Energy Regulatory Commission, 888 First Street, NE, Washington, DC 20426, in accordance with sections 385.214 or 385.211 of the Commission's Rules and Regulations. All such motions or protests must be filed in accordance with section 154.210 of the Commission's Regulations. Protests will be considered by the Commission in determining the appropriate action to be taken, but will not serve to make protestants parties to the proceedings. Any person wishing to become a party must file a motion to intervene. Copies of this filing are on file with the Commission and are available for public inspection in the Public Reference Room. This filing may be viewed on the web at http://www.ferc.fed.us/online/rims.htm (call 202–208–2222 for assistance).

**David P. Boergers,**

*Secretary.*

[FR Doc. 00–9865 Filed 4–19–00; 8:45 am]

BILLING CODE 6717–01–M

## DEPARTMENT OF ENERGY

### Federal Energy Regulatory Commission

**[Docket No. GT00–25–000]**

### TransColorado Gas Transmission Company; Notice of Tariff Filing

April 14, 2000.

Take notice that on April 12, 2000, TransColorado Gas Transmission Company (TransColorado) tendered for filing to become part of its FERC Gas Tariff, Original Volume No. 1, the tariff sheets listed to Appendix A to the filing, to be effective May 15, 2000.

TransColorado states that due to a change in the TransColorado partnership, changes have been proposed to modify the reference to the person to whom communications should be addressed regarding TransColorado's tariff and references to a former partner, El Paso TransColorado Company, have been removed. In addition, miscellaneous tariff ''clean-up'' type revisions have also been made.

TransColorado states that a copy of this filing has been served upon TransColorado's customers, the Colorado Public Utilities Commission and New Mexico Public Regulatory Commission.

Any person desiring to be heard or to protest said filing should file a motion to intervene or a protest with the Federal Energy Regulatory Commission, 888 First Street, NE., Washington, DC 20426, in accordance with Sections 385.214 or 385.211 of the Commission's Rules and Regulations. All such motions or protests must be filed in accordance with Section 154.210 of the Commission's Regulations. Protests will be considered by the Commission in determining the appropriate action to be taken, but will not serve to make protestants parties to the proceedings. Any person wishing to become a party must file a motion to intervene. Copies of this filing are on file with the Commission and are available for public inspection in the Public Reference Room. This filing may be viewed on the web at http://www.ferc.fed.us/online/

rims.htm (call 202–208–2222 for assistance).

**David P. Boergers,**

*Secretary.*

[FR Doc. 00–9863 Filed 4–19–00; 8:45 am]

BILLING CODE 6717–01–M

## DEPARTMENT OF ENERGY

### Federal Energy Regulatory Commission

### Notice of Application for Amendment of License and Soliciting Comments, Motions To Intervene, and Protests

April 14, 2000.

Take notice that the following application has been filed with the Commission and is available for public inspection.

a. *Application Type:* Amendment of License to Change Project Boundary Approve Revised Exhibits.

b. *Project No.:* 1389–025.

c. *Date Filed:* November 24, 1999 and March 31, 2000.

d. *Applicant:* Southern California Edison Company.

e. *Name of Project:* Rush Creek.

f. *Location:* The project is located on the Rush Creek near the Town of June Lake, in Mono and Inyo Counties, California.

g. *Filed Pursuant to:* Federal Power Act, 16 U.S.C. 791(a) 825(r) and 799 and 801.

h. *Applicant Contact:* Bryant C. Danner, Executive Vice President and General Council, Southern California Edison Company, 2244 Walnut Grove Avenue, P.O. Box 800, Rosemead, CA 91770, (626) 302–4459.

i. *FERC Contact:* Any questions on this notice should be addressed to Mr. Mohamad Fayyad at (202) 219–2665, or e-mail address: mohamad.fayyad@ferc.fed.us.

j. *Deadline for filing comments and or motions:* May 18, 2000.

All documents (original and eight copies) should be filed with: David P. Boergers, Secretary, Federal Energy Regulatory Commission, 888 First Street, NE., Washington DC 20426.

Please include the project number (P–1389–025) on any comments or motions filed.

k. *Description of Request:* SCE is proposing to expand the project boundary at the southern end of Agnew Lake to include a 15-foot-wide corridor for an existing 2.4-kV project's electrical distribution line. This line was in existence but not previously mapped. This would increase the amount of federal lands within the project boundary by 0.34 acre. In addition, SCE is proposing to delete from the license a 150-foot-long, 2.3-kV transmission line, which SCE says is part of its interconnected transmission system.

l. *Locations of the Application:* A copy of the application is available for inspection and reproduction at the Commission's Public Reference Room, located at 888 First Street, NE., Room 2A, Washington, DC 20426, or by calling (202) 208–1371. This filing may be viewed on http://www.ferc.fed.us/online/rims.htm (call (202) 208–2222 for assistance). A copy is also available for inspection and reproduction at the address in item (h) above.

m. Individuals desiring to be included on the Commission's mailing list should so indicate by writing to the Secretary of the Commission.

Comments, Protests, or Motions to Intervene—Anyone may submit comments, a protest, or a motion to intervene in accordance with the requirements of Rules of Practice and Procedure, 18 CFR 385.210, .211, .214. In determining the appropriate action to take, the Commission will consider all protests or other comments filed, but only those who file a motion to intervene in accordance with the Commission's Rules may become a party to the proceeding. Any comments, protests, or motions to intervene must be received on or before the specified comment date for the particular application.

Filing and Service of Responsive Documents—Any filings must bear in all capital letters the title ''COMMENTS'', ''RECOMMENDATIONS FOR TERMS AND CONDITIONS'', ''PROTEST'', OR ''MOTION TO INTERVENE'', as applicable, and the Project Number of the particular application to which the filing refers. Any of the above-named documents must be filed by providing the original and the number of copies provided by the Commission's regulations to: The Secretary, Federal Energy Regulatory Commission, 888 First Street, NE., Washington, DC 20426. A copy of any motion to intervene must also be served upon each representative of the Applicant specified in the particular application.

Agency Comments—Federal, state, and local agencies are invited to file comments on the described application. A copy of the application may be obtained by agencies directly from the Applicant. If an agency does not file comments within the time specified for filing comments, it will be presumed to have no comments. One copy of an agency's comments must also be sent to the Applicant's representatives.

**David P. Boergers,**

*Secretary.*

[FR Doc. 00–9866 Filed 4–19–00; 8:45 am]

BILLING CODE 6717–01–M

## DEPARTMENT OF ENERGY

### Federal Energy Regulatory Commission

**[Project No. 2000–010]**

### New York Power Authority; Notice of Proposed Restricted Service List for a Programmatic Agreement for Managing Properties Included in or Eligible for Inclusion in the National Register of Historic Places

April 14, 2000.

Rule 2010 of the Federal Energy Regulatory Commission's (Commission) Rules of Practice and Procedure provides that, to eliminate unnecessary expense or improve administrative efficiency, the Secretary may establish a restricted service list for a particular phase or issue in a proceeding.[1] The restricted service list should contain the names of persons on the service list who, in the judgment of the decisional authority establishing the list, are active participants with respect to the phase or issue in the proceeding for which the list is established.

The Commission staff is consulting with the New York State Historic Preservation Officer (hereinafter, SHPO) and the Advisory Council on Historic Preservation (hereinafter, Council) pursuant to the Council's regulations, 36 CFR Part 800, implementing Section 106 of the National Historic Preservation Act, as amended (16 U.S.C. Section 470 f), to prepare a Programmatic Agreement for managing properties included in, or eligible for inclusion in, the National Register of Historic Places at the St. Lawrence-FDR Power Project (Project No. 2000–010).

The Programmatic Agreement, when executed by the Commission, the SHPO, and the Council, would satisfy the Commission's section 106 responsibilities for all individual undertakings, carried out in accordance with the license until the license expires or is terminated (36 CFR 800.14). The Commission's responsibilities pursuant to Section 106 for the above project would be fulfilled through the Programmatic Agreement, which the Commission proposes to draft in consultation with certain parties listed

[1] 18 CFR 385.2010.

below. The executed Programmatic Agreement would be incorporated into any Order issuing license.

The New York Power Authority, as prospective licensee for Project No. 2000–010, is invited to participate in consultations to develop the Programmatic Agreement and to sign as a concurring party to the Programmatic Agreement.

For purposes of commenting on the Programmatic Agreement, we propose to restrict the service list for the St. Lawrence-FDR Power Project as follows:

Ms. Salli Benefict, Mohawk Nation Council, Box 35, Rooseveltown, NY 13683

Mr. David Blaha, Environmental Resources Management, 2666 Riva Road, Suite 200, Annapolis, MD 21401

Ms. Maxine Cole, Akwesasne Task Force on the Environment, P.O. Box 992, Hogansburn, NY 13655

Dr. Laura Henley Dean, Advisory Council on Historic Preservation, The Old Post Office Building, Suite 803, 1100 Pennsylvania Avenue, NW, Washington, D.C. 20004

Mr. Robert Dean, Dean & Barbour, P.O. Box 176, Old Route 17, Steamburg, NY 14783

Mr. Ken Jock, St. Regis Mohawk Tribal Council, RR#1, Box 8A, Hogansburn, NY 13655

Dr. Robert Kuhn, New York Office of Parks, Recreation, and Historic Preservation, Peebles Island, P.O. Box 189, Waterford, NY 12188–0189

Mr. Henry Lickers, Mohawk Council of Akwesasne, P.O. Box 579, Cornwall, Ontario K6H 5T3

Mr. William Slade, New York Power Authority, 123 Main Street, White Plains, NY 10601

Mr. Thomas Tatham, New York Power Authority, 1633 Broadway, 22–C, New York, NY 10019–6756

Mr. James Teitt, Environmental Resources Management, 355 East Campus View Blvd., Suite 250, Columbus, OH 43235

Any person on the official Service List for the above-captioned proceedings may request inclusion on the restricted service list, or may request that a restricted service list not be established, by filing a motion to that effect within 15 days of this notice date.

An original and 8 copies of any such motion must be filed with the Secretary of the Commission (888 First Street, NE, Washington, DC 20426) and must be served on each person whose name appears on the official Service list. If no such motions are filed, the restricted service list will be effective at the end of the 15 day period. Otherwise, a further notice will be issued ruling on the motion.

**David P. Boergers,**

*Secretary.*

[FR Doc. 00–9867 Filed 4–19–00; 8:45 am]

BILLING CODE 6717–01–M

## ENVIRONMENTAL PROTECTION AGENCY

**[FRL–6582–6]**

## Agency Information Collection Activities: Proposed Collection; Comment Request; Invitation for Bids and Request for Proposals (IFBs and RFPs)

**AGENCY:** Environmental Protection Agency (EPA).

**ACTION:** Notice.

**SUMMARY:** In compliance with the Paperwork Reduction Act (44 U.S.C. 3501 *et seq.*), this document announces that EPA is planning to submit the following continuing Information Collection Request (ICR) to the Office of Management and Budget (OMB): Invitation for Bids and Request for Proposals (IFBs and RFPs), EPA ICR No. 1038.10, OMB Control No. 2030–0006, expires 9/30/2000. Before submitting the ICR to OMB for review and approval, EPA is soliciting comments on specific aspects of the proposed information collection as described below.

**DATES:** Comments must be submitted on or before June 19, 2000.

**ADDRESSES:** 1200 Pennsylvania Ave NW, Ariel Rios Building, Attn 3802R, Washington, DC 20460.

**FOR FURTHER INFORMATION CONTACT:** Leigh Pomponio, (202) 564–4364, e-mail: *pomponio.leigh@epamail.epa.gov.* A hard copy of the ICR may be obtained by contacting the named individual.

**SUPPLEMENTARY INFORMATION:**

*Affected entities:* Entities potentially affected by this action are those companies or organizations, large and small businesses, that want to supply the EPA with supplies or services.

*Title:* Invitation for Bids and Request for Proposals (IFBs and RFPs), OMB Control No. 2030–0006, EPA ICR No., 1038.10, expiring 9/30/2000.

*Abstract:* EPA requires contractors to submit information in order to be considered for the award of a contract. Information requested includes: prices for the supplies/services requested, information on past performance, technical and cost information, and general financial and organizational information. Information provided by vendors in response to an RFP/IFB is used to evaluate which vendor will provide the best product in terms of quality, timeliness, and price. Responses to IFBs/RFPs are required to be considered for a contract award. The legal authority for this collection is 41 U.S.C. 253. Contractor confidential business information submitted in connection with an IFB or RFP response is protected from public release in accordance with 40 CFR 2.201 *et seq.* An agency may not conduct or sponsor, and a person is not required to respond to, a collection of information unless it displays a currently valid OMB control number. The OMB control numbers for EPA's regulations are listed in 40 CFR part 9 and 48 CFR Chapter 15.

The EPA would like to solicit comments to:

(i) Evaluate whether the proposed collection of information is necessary for the proper performance of the functions of the agency, including whether the information will have practical utility;

(ii) Evaluate the accuracy of the agency's estimate of the burden of the proposed collection of information, including the validity of the methodology and assumptions used;

(iii) Enhance the quality, utility, and clarity of the information to be collected; and

(iv) Minimize the burden of the collection of information on those who are to respond, including through the use of appropriate automated electronic, mechanical, or other technological collection techniques or other forms of information technology, *e.g.,* permitting electronic submission of responses.

*Burden Statement:* Burden estimate for responding to IFBs is 8 hours per submission. Annual collection by the Agency is estimated to be 288 bids. At an average cost of $461.30 for each submission, the annual cost to respondents is $132,854.40. Burden for responding to RFPs is estimated at 251 hours per submission. Annual receipt of proposals by the Agency is expected to be 973. At an average cost of $14,508.10 the annual cost for RFP information collection is estimated at $14,116,381. The total respondent burden for both IFBs and RFPs is 246,527 hours. Total annual cost for IFBs and RFPs is estimated at $14,249,235. Burden means the total time, effort, or financial resources expended by persons to generate, maintain, retain, or disclose or provide information to or for a Federal agency. This includes the time needed to review instructions; develop, acquire, install, and utilize technology and systems for the purposes of collecting, validating, and verifying information,

processing and maintaining information, and disclosing and providing information; adjust the existing ways to comply with any previously applicable instructions and requirements; train personnel to be able to respond to a collection of information; search data sources; complete and review the collection of information; and transmit or otherwise disclose the information.

Dated: April 14, 2000.

**Leigh Pomponio,**

*Acting Manager, Policy Service Center.*

[FR Doc. 00–9923 Filed 4–19–00; 8:45 am]

BILLING CODE 6560–50–P

## ENVIRONMENTAL PROTECTION AGENCY

**[FRL–6582–5]**

### Meeting of the Local Government Advisory Committee

**AGENCY:** Environmental Protection Agency (EPA).

**ACTION:** Notice.

**SUMMARY:** The Local Government Advisory Committee will meet on May 11–12, 2000, in Denver, Colorado. Subcommittee sessions will take place on May 12th. The Committee will engage in a strategic planning exercise during this meeting in order to determine their agenda and structure through the end of 2001 and develop work plans to accomplish their goals.

The Committee will hear comments from the public between 2:45 p.m. and 3:00 p.m. on May 11th. Each individual or organization wishing to address the Committee will be allowed a minimum of three minutes. Please contact the Designated Federal Officer (DFO) at the number listed below to schedule agenda time. Time will be allotted on a first come, first serve basis.

This is an open meeting and all interested persons are invited to attend. Meeting minutes will be available after the meeting and can be obtained by written request from the DFO. Members of the public are requested to call the DFO at the number listed below if planning to attend so that arrangements can be made to comfortably accommodate attendees as much as possible. However, seating will be on a first come, first serve basis.

**DATES:** The meeting will begin at 9:00 a.m. on Thursday, May 11th and conclude at 4:00 p.m. on the 12th.

**ADDRESSES:** The meetings will be held in Denver, Colorado at the EPA Region VIII Office located at 999 18th Street in the Rocky Mountain and Bison Conference Rooms.

Requests for Minutes and other information can be obtained by writing the DFO at 1200 Pennsylvania Avenue, NW (1306A), Washington, DC 20460.

**FOR FURTHER INFORMATION CONTACT:** The DFO for this Committee is Denise Zabinski Ney. She is the point of contact for information concerning any Committee matters and can be reached by calling (202) 564–3684 or by email at ney.denise@epa.gov.

Dated: April 12, 2000.

**Denise Zabinski Ney,**

*Designated Federal Officer, Local Government Advisory Committee.*

[FR Doc. 00–9922 Filed 4–19–00; 8:45 am]

BILLING CODE 6560–50–P

## ENVIRONMENTAL PROTECTION AGENCY

**[FRL–6581–9]**

### Notice of Proposed Administrative Cost Recovery Settlement Pursuant to the Comprehensive Environmental Response, Compensation, and Liability Act; Double A Metals Site

**AGENCY:** Environmental Protection Agency.

**ACTION:** Notice; request for public comment.

**SUMMARY:** In accordance with Section 122(i) of the Comprehensive Environmental Response, Compensation, and Liability Act, as amended (''CERCLA''), notice is hereby given of a proposed administrative cost recovery settlement under Section 122(h)(1) of CERCLA concerning the Double A Metals Site at 3321 South Pulaski, Chicago, Illinois (''Site''), which was signed by the EPA Director, Superfund Division, Region 5, on March 31, 2000. The settlement resolves an EPA claim under Section 107(a) of CERCLA against V.M.S. & D. Realty, Inc. The settlement requires the settling party to pay, to the Hazardous Substances Superfund, $106,763.45 and thirty (30) percent of any settlement or judgment amount that resolves issues related to the property transfer of the Site from Jepscor Metals, Inc. to V.M.S. & D. Realty, Inc.

For thirty (30) days following the date of publication of this notice, the Agency will receive written comments relating to the settlement. The Agency will consider all comments received and may modify or withdraw its consent to the settlement if comments received disclose facts or considerations which indicate that the settlement is inappropriate, improper, or inadequate. The Agency's response to any comments received will be available for public inspection at the Superfund Records Center, located at 77 West Jackson Boulevard, Seventh Floor, Chicago, Illinois.

**DATES:** Comments must be submitted on or before May 22, 2000.

**ADDRESSES:** The proposed settlement and additional background information relating to the settlement are available for public inspection at Superfund Records Center, located at 77 West Jackson Boulevard, Seventh Floor, Chicago, Illinois. A copy of the proposed settlement may be obtained from Superfund Records Center, located at 77 West Jackson Boulevard, Seventh Floor, Chicago, Illinois. Comments should reference the Double A Metals Site and EPA Docket No. V-W–00–C–587 and should be addressed to Steven J. Murawski, Assistant Regional Counsel, 77 West Jackson Boulevard (C–14J), Chicago, Illinois, 60604.

**FOR FURTHER INFORMATION CONTACT:** Steven J. Murawski, Assistant Regional Counsel, 77 West Jackson Boulevard (C-14J), Chicago, Illinois, 60604.

Dated: March 31, 2000.

**William E. Muno,**

*Director, Superfund Division, Region 5.*

[FR Doc. 00–9924 Filed 4–19–00; 8:45 am]

BILLING CODE 6560–50–P

## ENVIRONMENTAL PROTECTION AGENCY

**[PB–402404–MI; FRL–6494–6]**

### Lead-Based Paint Activities in Target Housing and Child-Occupied Facilities; State of Michigan Authorization Application

**AGENCY:** Environmental Protection Agency (EPA).

**ACTION:** Notice.

**SUMMARY:** On November 1, 1999, the State of Michigan submitted an application for EPA approval to administer and enforce training and certification requirements, training program accreditation requirements, and work practice standards for lead-based paint activities in target housing and child-occupied facilities under section 402 of the Toxic Substances Control Act (TSCA). This notice announces the receipt of Michigan's application, provides a 45-day public comment period, and provides an opportunity to request a public hearing on the application. The State of Michigan has provided a certification

that its program meets the requirements for approval of a State program under section 404 of TSCA. Therefore, pursuant to section 404, the program is deemed authorized as of the date of submission. If EPA finds that the program does not meet the requirements for approval of a State program, EPA will disapprove the program, at which time a notice will be issued in the **Federal Register** and the Federal program will take effect in the State of Michigan.

**DATES:** Comments, identified by docket control number PB–402404–MI, must be received on or before June 5, 2000. In addition, a public hearing request may be submitted on or before June 5, 2000.

**ADDRESSES:** Comments and the public hearing request may be submitted by mail, electronically, or in person. Please follow the detailed instructions for each method as provided in Unit I. of the **SUPPLEMENTARY INFORMATION.** To ensure proper receipt by EPA, it is imperative that you identify docket control number PB–402404–MI in the subject line on the first page of your response.

**FOR FURTHER INFORMATION CONTACT:** David Turpin, Regional Lead Coordinator, Environmental Protection Agency, Region V, Pesticides and Toxics Branch, 77 West Jackson Boulevard (DT–8J), Chicago, IL 60604; telephone: (312) 886-7836; e–mail address: turpin.david@epa.gov.

**SUPPLEMENTARY INFORMATION:**

## I. General Information

### *A. Does this Action Apply to Me?*

This action is directed to the public in general. This action may, however, be of interest to firms and individuals engaged in lead-based paint activities in the State of Michigan. Since other entities may also be interested, the Agency has not attempted to describe all the specific entities that may be affected by this action. If you have any questions regarding the applicability of this action to a particular entity, consult the person listed under **FOR FURTHER INFORMATION CONTACT.**

### *B. How Can I Get Additional Information, Including Copies of this Document or Other Related Documents?*

1. *Electronically*. You may obtain electronic copies of this document, and certain other related documents that might be available electronically, from the EPA Internet Home Page at http://www.epa.gov/. To access this document, on the Home Page select ''Laws and Regulations'' and then look up the entry for this document under the ''**Federal Register**—Environmental Documents.'' You can also go directly to the **Federal Register** listings at http://www.epa.gov/fedrgstr/.

2. *In person*. The Agency has established an official record for this action under docket control number PB–402404–MI. The official record consists of the documents specifically referenced in this action, this notice, the State of Michigan's authorization application, any public comments received during an applicable comment period, and other information related to this action, including any information claimed as Confidential Business Information (CBI). This official record includes the documents that are physically located in the docket, as well as the documents that are referenced in those documents. The public version of the official record does not include any information claimed as CBI. The public version of the official record, which includes printed, paper versions of any electronic comments submitted during an applicable comment period, is available for inspection from 8 a.m. to 4:30 p.m., Monday through Friday, excluding legal holidays. The docket is located at the EPA Region V Office, Environmental Protection Agency, Pesticides and Toxics Branch, 8th Floor, 77 West Jackson Boulevard, Chicago, IL 60604.

### *C. How and to Whom Do I Submit Comments and Hearing Requests?*

You may submit comments and hearing requests through the mail, in person, or electronically. To ensure proper receipt by EPA, it is imperative that you identify docket control number PB–402404–MI in the subject line on the first page of your response.

1. *By mail*. Submit your comments and hearing requests to: Environmental Protection Agency, Region V, Pesticides and Toxics Branch, 77 West Jackson Boulevard (DT–8J), Chicago, IL 60604.

2. *In person or by courier*. Deliver your comments and hearing requests to: Environmental Protection Agency, Pesticides and Toxics Branch, 8th Floor, 77 West Jackson Boulevard, Chicago, IL 60604. The regional office is open from 8 a.m. to 4:30 p.m., Monday through Friday, excluding legal holidays.

3. *Electronically*. You may submit your comments and hearing requests electronically by e-mail to: ''turpin.david@epa.gov'' or mail your computer disk to the address identified above. Do not submit any information electronically that you consider to be CBI. Electronic comments and hearing requests must be submitted as an ASCII file avoiding the use of special characters and any form of encryption. Comments and data and hearing requests will also be accepted on standard disks in WordPerfect 6.1/8.0 or ASCII file format. All comments and hearing requests in electronic form must be identified by docket control number PB–402404–MI. Electronic comments and hearing requests may also be filed online at many Federal Depository Libraries.

### *D. How Should I Handle CBI Information That I Want to Submit to the Agency?*

Do not submit any information electronically that you consider to be CBI. You may claim information that you submit to EPA in response to this document as CBI by marking any part or all of that information as CBI. Information so marked will not be disclosed except in accordance with procedures set forth in 40 CFR part 2. In addition to one complete version of the comment that includes any information claimed as CBI, a copy of the comment that does not contain the information claimed as CBI must be submitted for inclusion in the public version of the official record. Information not marked confidential will be included in the public version of the official record without prior notice. If you have any questions about CBI or the procedures for claiming CBI, please consult the person identified under **FOR FURTHER INFORMATION CONTACT.**

## II. Background

### *A. What Action is the Agency Taking?*

The State of Michigan has provided a certification letter stating that its lead-based paint training and certification program meets the requirements for authorization of a State program under section 404 of TSCA and has requested approval of the State of Michigan's lead-based paint training and certification program. Therefore, pursuant to section 404 of TSCA, the program is deemed authorized as of the date of submission (i.e., November 1, 1999). If EPA subsequently finds that the program does not meet all the requirements for approval of a State program, EPA will work with the State to correct any deficiencies in order to approve the program. If the deficiencies are not corrected, a notice of disapproval will be issued in the **Federal Register** and a Federal program will be implemented in the State.

Pursuant to section 404(b) of TSCA (15 U.S.C. 2684(b)), EPA provides notice and an opportunity for a public hearing on a State or Tribal program application before approving the application. Therefore, by this notice EPA is soliciting public comment on whether

the State of Michigan's application meets the requirements for EPA approval. This notice also provides an opportunity to request a public hearing on the application. If a hearing is requested and granted, EPA will issue a **Federal Register** notice announcing the date, time, and place of the hearing. EPA's final decision on the application will be published in the **Federal Register**.

*B. What is the Agency's Authority for Taking this Action?*

On October 28, 1992, the Housing and Community Development Act of 1992, Public Law 102–550, became law. Title X of that statute was the Residential Lead-Based Paint Hazard Reduction Act of 1992. That Act amended TSCA (15 U.S.C. 2601 *et seq.*) by adding Title IV (15 U.S.C. 2681–2692), entitled ''Lead Exposure Reduction.''

Section 402 of TSCA authorizes and directs EPA to promulgate final regulations governing lead-based paint activities in target housing, public and commercial buildings, bridges, and other structures. Those regulations are to ensure that individuals engaged in such activities are properly trained, that training programs are accredited, and that individuals engaged in these activities are certified and follow documented work practice standards. Under section 404 of TSCA, a State may seek authorization from EPA to administer and enforce its own lead-based paint activities program.

On August 29, 1996 (61 FR 45777) (FRL–5389–9), EPA promulgated final TSCA section 402/404 regulations governing lead-based paint activities in target housing and child-occupied facilities (a subset of public buildings). Those regulations are codified at 40 CFR part 745, and allow both States and Indian Tribes to apply for program authorization. Pursuant to section 404(h) of TSCA, EPA is to establish the Federal program in any State or Tribal Nation without its own authorized program in place by August 31, 1998.

States and Tribes that choose to apply for program authorization must submit a complete application to the appropriate Regional EPA Office for review. Those applications will be reviewed by EPA within 180 days of receipt of the complete application. To receive EPA approval, a State or Tribe must demonstrate that its program is at least as protective of human health and the environment as the Federal program, and provides for adequate enforcement (section 404(b) of TSCA, 15 U.S.C. 2684(b)). EPA's regulations (40 CFR part 745, subpart Q) provide the detailed requirements a State or Tribal program must meet in order to obtain EPA approval.

A State may choose to certify that its lead-based paint activities program meets the requirements for EPA approval, by submitting a letter signed by the Governor or Attorney General stating that the program meets the requirements of section 404(b) of TSCA. Upon submission of such certification letter, the program is deemed authorized. This authorization becomes ineffective, however, if EPA disapproves the application or withdraws the program authorization.

## III. State Program Description Summary

The following summary of the State of Michigan's proposed program has been provided by the applicant. Michigan Public Health Code, Act No. 368 of the Public Acts of 1978 assigns to the Michigan Department of Community Health (MDCH), among other responsibilities, the continuous and diligent endeavor to prevent disease, prolong life, and promote the public health through organized programs, including prevention and control of environmental health hazards; prevention and control of diseases; prevention and control of health problems of particularly vulnerable population groups. In carrying out its responsibility, the department shall:

1. Have general supervision of the interests of the health and life of the people of the state.
2. Implement and enforce laws for which responsibility is vested in the Department.
3. Make investigations and inquiries as to the causes, prevention and control of environmental health hazards, nuisances and sources of illness.

The Department may exercise authority and promulgate rules to properly safeguard the public health; to prevent the spread of diseases and the existence of sources of contamination; and to implement and carry out the powers of and duties vested by law in the Department. To assure compliance with laws enforced by the Department, the Department may inspect, investigate, or authorize inspections and investigations to be made.

The Lead Abatement Act, Public Acts 219 and 220 of 1998 enacted legislation to address lead-based paint hazards. The Michigan Department of Community Health, Community Public Health Administration's Lead Hazard Remediation Program (LHRP), is the recognized agency for the administration of the lead hazard control regulations. These regulations ensure that persons engaged in lead-based paint activities perform them in a safe manner to prevent exposure of building occupants to lead hazards. Individuals conducting lead-based paint inspections, risk assessments and abatements in target housing and child-occupied facilities are required to be properly trained and certified.

Michigan lead hazard remediation regulations also require the accreditation of training providers, establish a lead poisoning education and prevention program, establish work practice standards for lead-based paint activities, define rights and duties of regulated persons, and prescribe enforcement actions and noncompliance remedies.

All persons providing training in lead-based paint identification and abatement must be accredited. Accreditation of the training program is contingent upon the training program employing a training manager who meets the qualifications set forth in the promulgated rules. Training courses must include designated curricula for respective disciplines, and maintenance of records.

Lead professionals such as inspectors, risk assessors, supervisors and abatement workers must be certified. Individuals seeking certification or re-certification shall successfully complete an accredited training course in the appropriate discipline, pass a third party certification examination within 6 months of course completion, and meet the appropriate experience and education requirements for each discipline.

Work practice standards for conducting lead-based paint activities such as an inspection, lead-hazard screen, risk assessment or abatement have been established by statute and promulgated rules. These activities may only be performed by certified individuals in accordance with documented methodologies.

Authority for enforcement actions is established for the Michigan Department of Community Health under sections 5466(1), 5475(2) and 5476(2) of the Lead Abatement Act of 1998, being sections 333.5466, 333.5475, and 333.5476 of the Michigan Compiled Laws, and Rule 325.9925.

## IV. Federal Overfiling

Section 404(b) of TSCA makes it unlawful for any person to violate, or fail or refuse to comply with, any requirement of an approved State or Tribal program. Therefore, EPA reserves the right to exercise its enforcement authority under TSCA against a violation of, or a failure or refusal to

comply with, any requirement of an authorized State or Tribal program.

**V. Submission to Congress and the Comptroller General**

The Congressional Review Act, 5 U.S.C. 801 *et seq.*, as added by the Small Business Regulatory Enforcement Fairness Act of 1996, generally provides that before certain actions may take effect, the agency promulgating the action must submit a report, which includes a copy of the action, to each House of the Congress and to the Comptroller General of the United States. EPA will submit a report containing this action and other required information to the U.S. Senate, the U.S. House of Representatives, and the Comptroller General of the United States prior to publication of this document in the **Federal Register**. This action is not a ''major rule'' as defined by 5 U.S.C. 804(2).

**List of Subjects**

Environmental protection, Hazardous substances, Lead, Reporting and recordkeeping requirements.

Dated: March 20, 2000.

**Norman Niedergang,**

*Acting Regional Administrator, Region V.*

[FR Doc. 00–9927 Filed 4–19–00; 8:45 am]

BILLING CODE 6560–50–F

## FEDERAL COMMUNICATIONS COMMISSION

### Notice of Public Information Collection(s) Being Reviewed by the Federal Communications Commission for Extension Under Delegated Authority, Comments Requested

April 14, 2000.

**SUMMARY:** The Federal Communications Commission, as part of its continuing effort to reduce paperwork burden invites the general public and other Federal agencies to take this opportunity to comment on the following information collection(s), as required by the Paperwork Reduction Act of 1995, Public Law 104–13. An agency may not conduct or sponsor a collection of information unless it displays a currently valid control number. No person shall be subject to any penalty for failing to comply with a collection of information subject to the Paperwork Reduction Act (PRA) that does not display a valid control number. Comments are requested concerning: (a) Whether the proposed collection of information is necessary for the proper performance of the functions of the Commission, including whether the information shall have practical utility; (b) the accuracy of the Commission's burden estimate; (c) ways to enhance the quality, utility, and clarity of the information collected; and (d) ways to minimize the burden of the collection of information on the respondents, including the use of automated collection techniques or other forms of information technology.

**DATES:** Written comments should be submitted on or before June 19, 2000. If you anticipate that you will be submitting comments, but find it difficult to do so within the period of time allowed by this notice, you should advise the contact listed below as soon as possible.

**ADDRESSES:** Direct all comments to Les Smith, Federal Communications Commissions, Room 1 A–804, 445 Twelfth Street, SW, Washington, DC 20554 or via the Internet to lesmith@fcc.gov.

**FOR FURTHER INFORMATION CONTACT:** For additional information or copies of the information collections contact Les Smith at (202) 418–0217 or via the Internet at lesmith@fcc.gov.

**SUPPLEMENTARY INFORMATION:**

*OMB Approval Number:* 3060–0768.

*Title:* 28 GHz Band Segmentation Plan.

*Type of Review:* Extension of a currently approved collection.

*Form Number:* Not applicable.

*Respondents:* Businesses or other for-profit entities; not for profit institutions.

*Number of Respondents:* 15 respondents submitting paperwork approximately 4 times per year.

*Estimated Time Per Response:* 1.5 hours.

*Frequency of Response:* On occasion.

*Total Annual Burden:* 90 hours.

*Total Annual Costs:* $18,000.

*Needs and Uses:* The various collections of information accounted for in OMB# 3060–0768 are contained in C.F.R. Parts 25 and 101 of the Commission's rules. The Commission uses the information in carrying out its duties as set forth in Sections 308 and 309 of the Communications Act of 1934, as amended. Specifically, the Commission and other applicants and/or licensees in the 28 GHz band use the information to determine the technical coordination of systems that are designed to share the same band segment in the 28 GHz band.

*OMB Approval Number:* 3060–0769.

*Title:* Aeronautical Services Transition Plan.

*Type of Review:* Extension of a currently approved collection.

*Form Number:* Not applicable.

*Respondents:* Businesses or other for-profit entities.

*Number of Respondents:* 6.

*Estimated Time Per Response:* 2 hours.

*Frequency of Response:* On occasion.

*Total Annual Burden:* 12 hours.

*Total Annual Costs:* $5,400.

*Needs and Uses:* The information is used by engineering staff at the Commission to determine whether transition arrangements impact reliability of aeronautical communications services.

*OMB Number:* 3060–0611.

*Title:* Section 74.783 Station Identification.

*Form Number:* None.

*Type of Review:* Revision of currently approved collection.

*Respondents:* Business or other for-profit, State, Local or Tribal Government

*Number of Respondents:* 200.

*Estimated Time per Response:* 0.166 hours.

*Total Annual Burden:* 33 hours.

*Total Annual Costs:* $0.

*Needs and Uses:* On December 8, 1998, the Commission adopted a Report and Order in MM Docket No. 98–98, in the matter of Amendment of Part 73 and Part 74 Relating to Call Sign Assignments for Broadcast Stations. With this Report and Order, the Commission modified its practices and procedures with regard to the assignment of call signs to radio and television broadcast stations. Existing procedures were replaced by an on-line system for the electronic preparation and submission of requests for the reservation and authorization of new and modified call signs. Access to the call sign system is made via the Internet.

Section 74.783(e) permits any low power television (LPTV) station to request a four-letter call sign after receiving its construction permit. All initial LPTV construction permits will continue to be issued with a five-character LPTV call sign. This Report and Order requires LPTV respondents to use the on-line electronic system. To enable these respondents to use this on-line system, the Commission eliminated the requirement that holders of LPTV construction permits submit with their call sign requests a certification that the station has been constructed, that physical construction is underway at the transmitter site, or that a firm equipment order has been placed. The on-line reservation and authorization system was approved by OMB under Control Number 3060–0188. All burden associated with call sign requests are included in Control Number 3060–0188.

Section 74.783(b) requires television translator stations, whose station

identification is made by the television station whose signals are being rebroadcast by the translator, to furnish current information with regard to the translator's call letters and location, and the name, address and telephone number of the licensee to be contacted in the event of malfunction of the translator.

The furnishing of current information is used by the primary station licensee and/or FCC staff in field investigations to contact the translator licensee in the event of malfunction of the translator.

Federal Communications Commission.

**Magalie Roman Salas,**

*Secretary.*

[FR Doc. 00–9901 Filed 4–19–00; 8:45 am]

**BILLING CODE 6712–01–P**

---

## FEDERAL COMMUNICATIONS COMMISSION

### Notice of Public Information Collection(s) Being Reviewed by the Federal Communications Commission, Comments Requested

April 14, 2000.

**SUMMARY:** The Federal Communications Commission, as part of its continuing effort to reduce paperwork burden invites the general public and other Federal agencies to take this opportunity to comment on the following information collection, as required by the Paperwork Reduction Act of 1995, Public Law 104–13. An agency may not conduct or sponsor a collection of information unless it displays a currently valid control number. No person shall be subject to any penalty for failing to comply with a collection of information subject to the Paperwork Reduction Act (PRA) that does not display a valid control number. Comments are requested concerning (a) whether the proposed collection of information is necessary for the proper performance of the functions of the Commission, including whether the information shall have practical utility; (b) the accuracy of the Commission's burden estimate; (c) ways to enhance the quality, utility, and clarity of the information collected; and (d) ways to minimize the burden of the collection of information on the respondents, including the use of automated collection techniques or other forms of information technology.

**DATES:** Written comments should be submitted on or before June 19, 2000. If you anticipate that you will be submitting comments, but find it difficult to do so within the period of time allowed by this notice, you should advise the contact listed below as soon as possible.

**ADDRESSES:** Direct all comments to Les Smith, Federal Communications Commissions, 445 12th Street, S.W., Room 1–A804, Washington, DC 20554 or via the Internet to lesmith@fcc.gov.

**FOR FURTHER INFORMATION CONTACT:** For additional information or copies of the information collections contact Les Smith at (202) 418–0217 or via the Internet at lesmith@fcc.gov.

**SUPPLEMENTARY INFORMATION:**

*OMB Approval Number:* 3060–0683.

*Title:* Direct Broadcast Satellite Service—47 CFR Section 100.

*Type of Review:* Extension of a currently approved collection.

*Form Number:* Not applicable.

*Respondents:* Businesses or other for-profit entities.

*Number of Respondents:* 8.

*Estimated Time Per Response:* 400 hours.

*Frequency of Response:* On occasion.

*Total Annual Burden:* 3,200 hours.

*Total Annual Costs:* $0.

*Needs and Uses:* The information requested under CFR Part 100 of the Commission's rules is used by the Commission to determine whether applicants are legally, technically and financially qualified to hold a DBS authorization. Without such information, the Commission could not make determinations for authorization to provide service to successful applicants and would therefore not be able to fulfill its statutory obligations in accordance with the Communications Act of 1934, as amended.

Federal Communications Commission.

**Magalie Roman Salas,**

*Secretary.*

[FR Doc. 00–9902 Filed 4–19–00; 8:45 am]

**BILLING CODE 6712–01–P**

---

## FEDERAL COMMUNICATIONS COMMISSION

**[Report No. AUC–00–33–B (Auction No. 33); DA 00–781]**

### Auction of Licenses for the 700 MHz Guard Bands Scheduled for June 14, 2000; Auction Notice and Filing Requirements for 104 Licenses in the 700 MHz Guard Band Auction Scheduled for June 14, 2000 Minimum Opening Bids and Other Procedural Issues

**AGENCY:** Federal Communications Commission.

**ACTION:** Notice.

**SUMMARY:** This public notice announces the procedures and minimum opening bids for the upcoming auction of licenses for fixed and mobile services in the 746–747/776–777 and 762–764/792–794 MHz bands (''Auction No. 33'') scheduled to commence on June 14, 2000.

**DATES:** Auction No. 33 is scheduled for June 14, 2000.

**FOR FURTHER INFORMATION CONTACT:** *Auctions and Industry Analysis Division:* Howard Davenport, Attorney, Auctions Legal Branch at (202) 418–0660; Kathy Garland, Project Manager, Auctions Operations Branch at (717) 338–2888, or Craig Bomberger, Analyst, Auctions Operations Branch at (202) 418–0660. *Media Contact:* Meribeth McCarrick at (202) 418–0654. *Commercial Wireless Division:* Roger Noel, Chief, Licensing and Technical Analysis Branch, at (202) 418–0620.

**SUPPLEMENTARY INFORMATION:** This is a summary of a Public Notice released April 10, 2000. The complete text of the public notice, including Attachments A through H, is available for inspection and copying during normal business hours in the FCC Reference Center (Room CY–A257), 445 12th Street, SW, Washington, DC. Attachments C, D, and H where corrected in DA 00–850, released April 13, 2000 and is also available in the FCC Reference Center. It may also be purchased from the Commission's copy contractor, International Transcription Services, Inc. (ITS, Inc.) 1231 20th Street, NW, Washington, D.C. 20036, (202) 857–3800. It is also available on the Commission's web site at *http://www.fcc.gov.*

**List of Attachments available at the FCC:**

Attachment A—Auction No. 33 Licenses to be Auctioned Revised Upfront Payments and Minimum Opening Bids

Attachment B—FCC Auction Seminar Registration Form Auction No. 33

Attachment C—Electronic Filing and Review of the FCC Form 175 (Corrected in DA 00–850 released April 13, 2000)

Attachhment D—Guidelines for Completion of FCC Form 175 and Exhibits (Corrected in DA 00–850 released April 13, 2000)

Attachment E—Auction-Specific Instructions for FCC Remittance Advice (FCC Form 159)

Attachment F—FCC Bidding Preference/Remote Software Order Form Auction No. 33

Attachment G—Bid Increments and Exponential Smoothing

Attachment H—Accessing the FCC Network Using Windows 95/98

(Corrected in DA 00–850 released April 13, 2000)

Attachment I—Summary Listing of Documents from the Commission and the Wireless Telecommunications Bureau Addressing Application of the Anti-Collusion Rules

Attachment J—Incumbent Television Licenses on Channels 59 through 68

## I. General Information

*A. Introduction*

1. This public notice announces the procedures and minimum opening bids for the upcoming auction of licenses for fixed and mobile services in the 746–747/776–777 and 762–764/792–794 MHz bands (''Auction No. 33''). On March 10, 2000, the Wireless Telecommunications Bureau (''Bureau'') released a public notice, seeking comment on the establishment of reserve prices or minimum opening bids for Auction No. 33, in accordance with the Balanced Budget Act of 1997. *See* DA 00–559, Auction of Licenses for the 700 MHz Guard Bands Scheduled for June 14, 2000 (*Auction No. 33 Comment Public Notice*) 65 FR 14561 (March 17, 2000). In addition, the Bureau sought comment on a number of procedures to be used in Auction No. 33. The Bureau received four comments and five reply comments in response to the *Auction No. 33 Comment Public Notice.*

(i) Background of Proceeding

2. The 746–806 MHz band has historically been used exclusively by television stations (Channels 60–69). Incumbent analog television broadcasters are permitted by statute to continue operations in this band until their markets are converted to digital television (''DTV''). *See* Advanced Television Systems and Their Impact Upon Existing Television Broadcast Service (*Fifth Report and Order*) 63 FR 15774 (April 1, 1998). The Budget Act directed the Commission to reallocate this spectrum for public safety and commercial use by December 31, 1997, and to commence competitive bidding for the commercial licenses on the reallocated spectrum after January 1, 2001. In November 1999, Congress enacted a consolidated appropriations statute that revised the latter instruction. This legislation accelerated the schedule for auction of the commercial spectrum bands, and requires that the proceeds from the auction of these bands be deposited in the U.S. Treasury by September 30, 2000.

(ii) Licenses To Be Auctioned

3. The licenses available in this auction consist of one 4 megahertz license (a pair of 2 megahertz blocks) and one 2 megahertz license (a pair of 1 megahertz blocks) in each of 52 Major Economic Areas (MEAs). These licenses are listed in this public notice on Attachment A. The following table contains the Block/Frequency Band cross-references for Auction No. 33:

FREQUENCIES (MHZ)

| License suffix | Frequencies |
|---|---|
| A | 746–747, 776–777 |
| B | 762–764, 792–794 |

*B. Rules and Disclaimers*

**(i) Relevant Authority**

4. Prospective bidders must familiarize themselves thoroughly with the Commission's rules relating to the 700 MHz band, contained in title 47, part 27 of the Code of Federal Regulations, and those relating to application and auction procedures, contained in title 47, part 1 of the Code of Federal Regulations.

5. Prospective bidders must also be thoroughly familiar with the procedures, terms and conditions (collectively, ''Terms'') contained in this public notice; the *Auction No. 33 Comment Public Notice;* Service Rules for the 746–764 and 776–794 MHz Bands, and Revisions to Part 27 of the Commission's Rules) (*700 MHz Second Report & Order*), FCC 00–90, 65 FR 17594 (April 4, 2000), and First Report and Order, FCC 00–5 (*700 MHz First Report & Order*), 65 FR 3139 (January 20, 2000) *recon pending;* Reallocation of Television Channels 60–69, the 746–806 MHz Band, ET Docket No. 97–157, (*Report and Order*), 63 FR 6669 (February 10, 1998), *recon.*, 63 FR 63798 (November 17, 1998) (*Reallocation Reconsideration*).

6. The terms contained in the Commission's rules, relevant orders and public notices are not negotiable. The Commission may amend or supplement the information contained in our public notices at any time, and will issue public notices to convey any new or supplemental information to bidders. It is the responsibility of all prospective bidders to remain current with all Commission rules and with all public notices pertaining to this auction. Copies of most Commission documents, including public notices, can be retrieved from the FCC Internet node via anonymous ftp@ftp.fcc.gov or the FCC Auctions World Wide Web site at *http://www.fcc.gov/wtb/auctions.* Additionally, documents may be obtained for a fee by calling the Commission's copy contractor, International Transcription Service, Inc. (ITS), at (202) 314–3070. When ordering documents from ITS, please provide the appropriate FCC number (for example, FCC 00–5 for the *700 MHz First Report & Order*).

**(ii) Prohibition of Collusion**

7. To ensure the competitiveness of the auction process, the Commission's rules prohibit applicants for the same geographic license area from communicating with each other during the auction about bids, bidding strategies, or settlements. This prohibition begins with the filing of short-form applications, and ends on the down payment due date after the auction. Bidders competing for licenses in the same geographic license areas are encouraged not to use the same individual as an authorized bidder. A violation of the anti-collusion rule could occur if an individual acts as the authorized bidder for two or more competing applicants, and conveys information concerning the substance of bids or bidding strategies between the bidders he/she is authorized to represent in the auction. Also, if the authorized bidders are different individuals employed by the same organization (*e.g.*, law firm or consulting firm), a violation could similarly occur. At a minimum, in such a case, applicants should certify on their applications that precautionary steps have been taken to prevent communication between authorized bidders and that applicants and their bidding agents will comply with the anti-collusion rule.

8. The Bureau, however, cautions that merely filing a certifying statement as part of an application will not outweigh specific evidence that collusive behavior has occurred nor will it preclude the initiation of an investigation when warranted. In Auction No. 33, for example, the rule would apply to any applicants bidding for the same MEA. Therefore, applicants that apply to bid for ''all markets'' would be precluded from communicating with all other applicants after filing the FCC Form 175. However, applicants may enter into bidding agreements *before* filing their FCC Form 175 short-form applications, as long as they disclose the existence of the agreement(s) in their Form 175 short-form applications. If parties agree in principle on all material terms prior to the short-form filing deadline, those parties must be identified on the short-form application under § 1.2105(c), even if the agreement has not been reduced

to writing. If the parties have not agreed in principle by the filing deadline, an applicant would not include the names of those parties on its application, and may not continue negotiations with other applicants for the same geographic license areas. By signing their FCC Form 175 short-form applications, applicants are certifying their compliance with § 1.2105(c). In addition, § 1.65 of the Commission's Rules requires an applicant to *maintain* the accuracy and completeness of information furnished in its pending application and to notify the Commission within 30 days of any substantial change that may be of decisional significance to that application. Thus, § 1.65 requires an auction applicant to notify the Commission of any violation of the anti-collusion rules upon learning of such violation. Bidders are therefore required to make such notification to the Commission immediately upon discovery.

(iii) Protection of Public Safety Operations

9. Section 337(d)(4) of the Budget Act requires that the Commission establish rules insuring that public safety services licensees using spectrum reallocated pursuant to subsection (a)(1) shall not be subject to harmful interference from television broadcast licensees. The Conference Report pertaining to that section states that the Commission should ensure that public safety service licensees in the 746–806 MHz band ''continue to operate free of interference from any new commercial licensees.'' To achieve this end, the Commission established ''Guard Bands'' in the 746–747 MHz, 762–764 MHz, 776–777 MHz, and 792–794 MHz bands. The Commission required that entities operating in the Guard Bands adhere to the same out-of-band emission (''OOBE'') criteria that was adopted for 700 MHz public safety users. In addition, these entities must coordinate their frequency use with public safety frequency coordinators and also comply with the adjacent channel coupled power out-of-band emission limits. In addition, operations in the Guard Bands are restricted to entities that do not use a cellular system architecture.

(iv) Protection of Television Services

10. Licensees operating on the spectrum associated with Channels 60, 62, 65, and 67 must comply with the co-channel and adjacent channel provisions of § 27.60 of our rules. For example, an entity operating on any portion of the 746–747 MHz Guard Band, which is contained in Channel 60, must provide co-channel protection to Channel 60, and adjacent channel protection to Channels 59 and 61.

a. Negotiations With Incumbent Broadcast Licensees

11. As the Commission noted in the *700 MHz First Report & Order:* ''The Congressional plan set forth in sections 336 and 337 of the [Communications] Act and in the 1997 Budget Act is to transition this spectrum from its current use for broadcast services to commercial use and public safety services.'' Congress also has directed the Commission to auction 36 MHz of spectrum, six of which are the subject of this auction, allocated for commercial use at least six years before the relocation deadline for incumbent broadcasters in this spectrum, while adopting interference limits and other technical restrictions necessary to protect full-service analog and digital television service during the transition to DTV. In these circumstances, the Commission will consider specific regulatory requests needed to implement voluntary agreements reached between incumbent licensees and new licensees in these bands. In considering whether the public interest would be served by approving specific requests, the Commission would, for example, consider the benefits to consumers of the provision of new wireless services, such as next generation mobile services or Internet fixed access services. The Commission would also consider whether such agreements would help clear spectrum for public safety use in these bands and could result in the provision of new wireless service in rural and other relatively underserved communities. On the other hand, the Commission would also consider loss of service to the broadcast community of the licensee. For example, the Commission would consider the availability of the licensee's former analog programming within the service area, through simulcast of that programming on the licensee's DTV channel or distribution of the programming on cable or DBS, or the availability of similar broadcast services within the service area (e.g., whether the lost service is the only network service, the only source for local service, or the only source for otherwise unique broadcast service).

b. Canadian and Mexican Border Regions

12. There are currently separate agreements with Canada and Mexico covering TV broadcast use of the UHF 470–806 MHz band. Such agreements do not reflect the additional use or services adopted in the *700 MHz First Report & Order* and the *700 MHz Second Report & Order* for 746–764 and 776–794 MHz bands. While the Commission staff has been involved in discussions with both countries regarding coordination of interference criteria for the use of these bands in the border areas for the additional services, agreements have yet to be reached. Therefore, until such agreements have been finalized, the Commission found it necessary to adopt certain interim requirements for licenses in these bands along the Canada and Mexico borders. Accordingly, licenses issued for these bands within 120 km of the borders will be made subject to whatever future agreements the United States develops with those two countries. In that the existing agreements for the protection of TV stations in those countries are still in effect and must be recognized until they are replaced or modified to reflect the new uses, the Commission decided that licenses in the border areas will be granted on the condition that harmful interference may not be caused to, but must accept interference from, UHF TV transmitters in Canada and Mexico. Furthermore, the Commission pointed out that modifications may be necessary to comply with whatever provisions are ultimately specified in future agreements with Canada and Mexico regarding the use of these bands. Pending further negotiations, the Commission has adopted the protection criteria found in § 90.545 of the Commission's Rules, 47 CFR 90.545, as an interim criteria for protecting Canadian and Mexican TV and DTV stations. Potential bidders should be aware that a petition for reconsideration of the TV protection criteria has been filed. Based on future Commission action on this petition, the protection criteria and license conditions, as described, could be modified.

(v) Due Diligence

13. The FCC makes no representations or warranties about the use of this spectrum for particular services. Applicants should be aware that an FCC auction represents an opportunity to become an FCC licensee in this service, subject to certain conditions and regulations. An FCC auction does not constitute an endorsement by the FCC of any particular services, technologies or products, nor does an FCC license constitute a guarantee of business success. Applicants should perform their individual due diligence before proceeding as they would with any new business venture.

14. Potential bidders are reminded that there are a number of incumbent broadcast television licensees already

licensed and operating in the 746–764 and 776–794 MHz bands (television Channels 60–62 and 65–67), six megahertz of which will be subject to the upcoming auction. The Commission made clear that geographic area licensees operating on the spectrum associated with Channels 60, 62, 65, and 67 must comply with the co-channel and adjacent channel provision of § 90.545 of the Commission's rules. In addition, geographic area licensees operating fixed stations in the 746–764 MHz band must comply with the relevant provisions for ''base stations'' in §§ 90.309 and 90.545 of the Commissions rules; and licensees operating fixed stations in the 776–794 MHz band must comply with the relevant provisions for ''control stations'' in those sections of the rules.

15. These limitations may restrict the ability of such geographic licensees to use certain portions of the electromagnetic spectrum or provide service to certain regions in their geographic license areas. Listed in Attachment J are the facilities of incumbent television permittees and licensees on television Channels 59–68. However, prospective bidders should not rely solely on this list, but should carefully review the Commission's databases and records before formulating bidding strategies. Records relating to these stations are available for public inspection during regular business hours in the Reference Information Center at the Federal Communications Commission, 445 Twelfth Street, SW, CY–A257, Washington, DC 20554. The Commission makes no representation or guarantees regarding the accuracy or completeness of the information in Attachment J. In addition, the Commission makes no representations or guarantees regarding the accuracy or completeness of information that has been provided by incumbent licensees and incorporated into the databases. Potential bidders are strongly encouraged to physically inspect any sites located in or near the geographic area for which they plan to bid.

Potential bidders should also be aware of the following filings:

- QUALCOMM Incorporated, Petition for Declaratory Ruling Giving Effect to the Mandate of the District of Columbia Circuit Court of Appeals, Service Rules for the 746–764 and 776–794 MHz Bands and Revisions to Part 27 of the Commission's Rules, Petition for Declaratory Ruling (filed January 28, 2000).
- ''Wireless Telecommunications Bureau Seeks Comment On QUALCOMM Incorporated's Petition for Declaratory Ruling Seeking 700 MHz Band License Pursuant to Ruling of U.S. Circuit Court of Appeals,'' *Public Notice,* DA 00–219 (rel. February 4, 2000); Extension of Filing Deadline for Comments to QUALCOMM Incorporated's Petition for Declaratory Ruling, *Public Notice,* DA 00–273 (rel. February 11, 2000). 65 FR 9266 (February 24, 2000)

*Potential bidders should also be aware that certain applications (including those for modification), petitions for rulemaking, waiver requests, requests for special temporary authority (''STA''), petitions to deny, petitions for reconsideration, and applications for review may be pending before the Commission that relate to the facilities in Attachment J. We note that resolution of these pending matters could have an impact on the availability of spectrum for licensees in the 746–764 and 776–794 MHz bands. While the Commission will continue to act on pending matters, some of these matters may not be resolved by the time of auction. Potential bidders are strongly encouraged to conduct their own research prior to Auction No. 33 in order to determine the existence of pending proceedings that might affect their decisions regarding participation in the auction. Participants in Auction No. 33 are strongly encouraged to continue such research during the auction.*

(vi) Bidder Alerts

16. All applicants must certify on their FCC Form 175 applications under penalty of perjury that they are legally, technically, financially and otherwise qualified to hold a license, and not in default on any payment for Commission licenses (including down payments) or delinquent on any non-tax debt owed to any Federal agency. Prospective bidders are reminded that submission of a false certification to the Commission is a serious matter that may result in severe penalties, including monetary forfeitures, license revocations, exclusion from participation in future auctions, and/or criminal prosecution.

17. As is the case with many business investment opportunities, some unscrupulous entrepreneurs may attempt to use Auction No. 33 to deceive and defraud unsuspecting investors. Common warning signals of fraud include the following:

- The first contact is a ''cold call'' from a telemarketer, or is made in response to an inquiry prompted by a radio or television infomercial.
- The offering materials used to invest in the venture appear to be targeted at IRA funds, for example by including all documents and papers needed for the transfer of funds maintained in IRA accounts.
- The amount of the minimum investment is less than $25,000.
- The sales representative makes verbal representations that: (a) The Internal Revenue Service (''IRS''), Federal Trade Commission (''FTC''), Securities and Exchange Commission (''SEC''), FCC, or other government agency has approved the investment; (b) the investment is not subject to state or federal securities laws; or (c) the investment will yield unrealistically high short-term profits. In addition, the offering materials often include copies of actual FCC releases, or quotes from FCC personnel, giving the appearance of FCC knowledge or approval of the solicitation.

18. Information about deceptive telemarketing investment schemes is available from the FTC at (202) 326–2222 and from the SEC at (202) 942–7040. Complaints about specific deceptive telemarketing investment schemes should be directed to the FTC, the SEC, or the National Fraud Information Center at (800) 876–7060. Consumers who have concerns about specific 700 MHz proposals may also call the FCC Consumer Center at (888) CALL–FCC ((888) 225–5322).

(vii) National Environmental Policy Act (NEPA) Requirements

19. The licensee must comply with the Commission's rules regarding the National Environmental Policy Act (NEPA). The construction of a 700 MHz facility is a federal action and the permitee must comply with the Commission's NEPA rules for each such facility. *See* 47 CFR 1.1305–1.1319. The Commission's NEPA rules require that, among other things, the permitee consult with expert agencies having NEPA responsibilities, including the U.S. Fish and Wildlife Service, the State Historic Preservation Office, the Army Corp of Engineers and the Federal Emergency Management Agency (through the local authority with jurisdiction over floodplains). The permitee must prepare environmental assessments for facilities that may have a significant impact in or on wilderness areas, wildlife preserves, threatened or endangered species or designated critical habitats, historical or archaeological sites, Indian religious sites, floodplains, and surface features. The permitee must also prepare environmental assessments for facilities that include high intensity white lights in residential neighborhoods or excessive radio frequency emission.

*C. Auction Specifics*

(i) Auction Date

20. The auction will begin on Wednesday, June 14, 2000. The initial schedule for bidding will be announced by public notice at least one week before the start of the auction. Unless otherwise announced, bidding on all licenses will be conducted on each business day until bidding has stopped on all licenses.

(ii) Auction Title

21. Auction No. 33—700 MHz Guard Band

(iii) Bidding Methodology

22. The bidding methodology for Auction No. 33 will be simultaneous multiple round bidding. Bidding will be permitted only from remote locations, either electronically (by computer) or telephonically.

(iv) Pre-Auction Dates and Deadlines

23. The following are important events and deadlines related to Auction No. 33:

April 27, 2000
Auction Seminar
May 9, 2000; 6 p.m. ET
Short-Form Application (FCC FORM 175)
May 26, 2000; 6 p.m. ET
Upfront Payments (via wire transfer)
May 30, 2000; 6 p.m. ET
Orders for Remote Bidding Software
June 12, 2000
Mock Auction
June 14, 2000
Auction Begins

(v) Requirements for Participation

24. Those wishing to participate in the auction must:

- Submit a short form application (FCC Form 175) electronically by 6 p.m. ET, May 9, 2000.
- Submit a sufficient upfront payment and an FCC Remittance Advice Form (FCC Form 159) by 6 p.m. ET May 26, 2000.
- Comply with all provisions outlined in this public notice.

(vi) General Contact Information

25. The following is a list of general contact information relating to Auction No. 33:

**General Auction Information**

General Auction Questions
Seminar Registration
Orders for Remote Bidding Software
FCC Auctions Hotline, (888) 225–5322, Press Option #2, or direct (717) 338–2888. Hours of service: 8 a.m.–6:00 p.m. ET

*Auction Legal Information*

Auction Rules, Policies, Regulations
Auctions and Industry Analysis Division, Legal Branch (202) 418–0660

*Licensing Information*

Rules, Policies, Regulations
Licensing Issues
Incumbency/Protection Issues
Commercial Wireless Division, (202) 418–0620

*Technical Support*

Electronic Filing Assistance
Software Downloading
FCC Auctions Technical Support Hotline, (202) 414–1250 (Voice), (202) 414–1255 (TTY). Hours of service: 8 a.m.–6 p.m. ET

*Payment Information*

Wire Transfers
Refunds
FCC Auctions Accounting Branch, (202) 418–1995, (202) 418–2843 (Fax)

*Telephonic Bidding*

*FCC Copy Contractor*

Will be furnished only to qualified bidders
Additional Copies of Commission Documents
International Transcription Services, Inc., 445 12th Street, SW Room CY–B400, Washington, DC 20554, (202) 314–3070

*Press Information*

Meribeth McCarrick, (202) 418–0654

*FCC Forms*

(800) 418–3676 (outside Washington, DC),
(202) 418–3676 (in the Washington Area)
*http://www.fcc.gov/formpage*

*FCC Internet Sites*

*http://www.fcc.gov/wtb/auctions*
*http://www.fcc.gov*
*ftp://ftp.fcc.gov*

**II. Short-Form (FCC Form 175) Application Requirements**

26. Guidelines for completion of the short-form (FCC Form 175) are set forth in Attachment D to this public notice. The short-form application seeks the applicant's name and address, legal classification, status, bidding credit eligibility, identification of the authorization(s) sought, the authorized bidders and contact persons, and specific ownership information.

*A. Ownership Disclosure Requirements (Form 175 Exhibit A)*

27. All applicants must comply with the uniform part 1 ownership disclosure standards and provide information required by §§ 1.2105 and 1.2112 of the Commission's rules. Specifically, in completing Form 175, applicants will be required to file an Exhibit A providing a full and complete statement of the ownership of the bidding entity. The ownership disclosure standards for the short-form are set forth in § 1.2112 of the Commission's rules.

*B. Consortia and Joint Bidding Arrangements (Form 175 Exhibit B)*

28. Applicants will be required to identify on their short-form applications any parties with whom they have entered into any consortium arrangements, joint ventures, partnerships or other agreements or understandings which relate in any way to the licenses being auctioned, including any agreements relating to post-auction market structure. *See* 47 CFR 1.2105(a)(2)(viii), 1.2105(c)(1). Applicants will also be required to certify on their short-form applications that they have not entered into any explicit or implicit agreements, arrangements or understandings of any kind with any parties, other than those identified, regarding the amount of their bids, bidding strategies, or the particular construction permits on which they will or will not bid. *See* 47 CFR 1.2105(a)(2)(ix). As discussed, if an applicant has had discussions, but has not reached a joint bidding agreement by the short-form deadline, it would not include the names of parties to the discussions on its application and may not continue discussions with applicants for the same geographic license area(s) after the deadline. In cases where applicants have entered into consortia or joint bidding arrangements, applicants must submit an Exhibit B to the FCC Form 175.

29. A party holding a non-controlling, attributable interest in one applicant will be permitted to acquire an ownership interest in, form a consortium with, or enter into a joint bidding arrangement with other applicants for construction permits in the same geographic license area provided that (i) the attributable interest holder(s) certify that it has not and will not communicate with any party concerning the bids or bidding strategies of more than one of the applicants in which it holds an attributable interest, or with which it has formed a consortium or entered into a joint bidding arrangement; and (ii) the arrangements do not result in a change in control of any of the applicants. While the anti-collusion rules do not prohibit non-auction related business negotiations among auction applicants,

bidders are reminded that certain discussions or exchanges could broach on impermissible subject matters because they may convey pricing information and bidding strategies.

*C. Small Business Bidding Credits (Form 175 Exhibit C)*

30. In the *700 MHz Second Report & Order,* the Commission adopted small business provisions to promote and facilitate the participation of small businesses in competitive bidding for Guard Band licenses in the 700 MHz band.

(i) Eligibility

31. Bidding credits are available to small businesses and very small businesses as defined in 47 CFR 27.502(a). For purposes of determining which entities qualify as very small businesses or small businesses, the Commission will consider the gross revenues of the applicant, its controlling interests, and affiliates of the applicant and its controlling interests. The Commission does not impose specific equity requirements on controlling interests. Once principals or entities with a controlling interest are determined, only the revenues of those principals or entities, the applicant and its affiliates will be counted in determining small business eligibility. The term ''control'' includes both *de facto* and *de jure* control of the applicant. Typically, *ownership of at least 50.1 percent of an entity's voting stock evidences de jure control. De facto* control is determined on a case-by-case basis. The following are some common indicia of control:

- The entity constitutes or appoints more than 50 percent of the board of directors or management committee;
- The entity has authority to appoint, promote, demote, and fire senior executives that control the day-to-day activities of the licensee; or
- The entity plays an integral role in management decisions.

32. A consortium of small businesses, or very small businesses is a conglomerate organization formed as a joint venture between or among mutually independent business firms, each of which *individually* satisfies the definition of small or very small business in § 27.502. Thus, each consortium member must disclose its gross revenues along with those of its affiliates, controlling interests, and controlling interests' affiliates. We note that although the gross revenues of the consortium members will not be aggregated for purposes of determining eligibility for small or very small business credits, this information must be provided to ensure that each individual consortium member qualifies for any bidding credit awarded to the consortium.

(ii) Application Showing

33. Applicants must file supporting documentation as Exhibit C to their FCC Form 175 short form applications to establish that they satisfy the eligibility requirements to qualify as a small business or very small business (or consortia of small or very small businesses) for this auction. Specifically, for Auction No. 33, applicants applying to bid as small or very small businesses (or consortia of small or very small businesses) will be required to disclose on Exhibit C to their FCC Form 175 short-form applications, *separately and in the aggregate,* the gross revenues for the preceding three years of each of the following: (a) the applicant; (b) the applicant's affiliates; (c) the applicant's controlling interests; and (d) the affiliates of the applicant's controlling interests. Certification that the average gross revenues for the preceding three years do not exceed the applicable limit is not sufficient. A statement of the total gross revenues for the preceding three years is also insufficient. The applicant must provide separately for itself, its affiliates, and its controlling interests, a schedule of gross revenues for *each* of the preceding three years, as well as a statement of total average gross revenues for the three-year period. If the applicant is applying as a consortium of very small or small businesses, this information must be provided for each consortium member.

(iii) Bidding Credits

34. Applicants that qualify under the definitions of small business and very small business (or consortia of small or very small businesses) as are set forth in 47 CFR 27.502, are eligible for a bidding credit that represents the amount by which a bidder's winning bids are discounted. The size of a bidding credit in the 700 MHz guard band auction depends on the average gross revenues for the preceding three years of the bidder and its controlling interests and affiliates:

- A bidder with average gross revenues of not more than $40 million for the preceding three years receives a 15 percent discount on its winning bids for 700 MHz Guard Band manager licenses (''small business'');
- A bidder with average gross revenues of not more than $15 million for the preceding three years receives a 25 percent discount on its winning bids for 700 MHz Guard Band manager licenses (''very small business'').

35. Bidding credits are not cumulative: qualifying applicants receive either the 15 percent or the 25 percent bidding credit, but not both.

36. Bidders in Auction No. 33 should note that unjust enrichment provisions apply to winning bidders that use bidding credits and subsequently assign or transfer control of their licenses to an entity not qualifying for the same level of bidding credit. Finally, bidders should also note that there are no installment payment plans in Auction No. 33.

*D. Other Information (Form 175 Exhibits D and E)*

37. Applicants owned by minorities or women, as defined in 47 CFR 1.2110(b)(2), may attach an exhibit (Exhibit D) regarding this status. This applicant status information is collected for statistical purposes only and assists the Commission in monitoring the participation of ''designated entities'' in its auctions. Applicants wishing to submit additional information may do so in Exhibit E, Miscellaneous Information to the FCC Form 175.

*E. Minor Modifications to Short-Form Applications (FCC Form 175)*

38. After the short-form filing deadline (May 9, 2000), applicants may make only minor changes to their FCC Form 175 applications. Applicants will not be permitted to make major modifications to their applications (*e.g.,* change their license selections, change the certifying official or change control of the applicant or change bidding credits). *See* 47 CFR 1.2105. Permissible minor changes include, for example, deletion and addition of authorized bidders (to a maximum of three) and revision of exhibits. Applicants should make these changes on-line, and submit a letter to Amy Zoslov, Chief, Auctions and Industry Analysis Division, Wireless Telecommunications Bureau, Federal Communications Commission, 445 12th Street, SW, Suite 4-A760 Washington, DC 20554, briefly summarizing the changes. Questions about other changes should be directed to Howard Davenport of the Auctions and Industry Analysis Division at (202) 418–0660.

*F. Maintaining Current Information in Short-Form Applications (FCC Form 175)*

39. Applicants have an obligation under 47 CFR 1.65, to maintain the completeness and accuracy of information in their short-form applications. Amendments reporting substantial changes of possible decisional significance in information

contained in FCC Form 175 applications, as defined by 47 CFR 1.2105(b)(2), will not be accepted and may in some instances result in the dismissal of the FCC Form 175 application.

**III. Pre-Auction Procedures**

*A. Auction Seminar*

40. On Thursday, April 27, 2000, the FCC will sponsor a free seminar for Auction No. 33 at the Federal Communications Commission, located at 445 12th Street, S.W., Washington, D.C. The seminar will provide attendees with information about pre-auction procedures, conduct of the auction, FCC remote bidding software, and the 700 MHz Guard Band service and auction rules. The seminar will also provide an opportunity for prospective bidders to ask questions of FCC staff.

41. To register, complete the registration form that is included as Attachment B of this public notice and submit it by Tuesday, April 25, 2000. Registrations are accepted on a first-come, first-served basis.

*B. Short-Form Application (FCC Form 175)—Due May 9, 2000*

42. In order to be eligible to bid in this auction, applicants must first submit a FCC Form 175 application. This application must be submitted electronically and received at the Commission by 6 p.m. ET on May 9, 2000. Late applications will not be accepted.

43. There is no application fee required when filing a FCC Form 175. However, to be eligible to bid, an applicant must submit an upfront payment. *See* part III.D.

(i) Electronic Filing

44. Applicants must file their FCC Form 175 applications electronically. Applications may generally be filed at any time from April 27, 2000 until 6 p.m. ET on May 9, 2000. Applicants are strongly encouraged to file early, and applicants are responsible for allowing adequate time for filing their applications. Applicants may update or amend their electronic applications multiple times until the filing deadline on May 9, 2000.

45. Information about accessing the FCC Form 175 is included in Attachment C. Technical support is available at (202) 414–1250 (voice) or (202) 414–1255 (text telephone (TTY)); the hours of service are 8 a.m. to 6 p.m. ET, Monday through Friday.

(ii) Completion of the FCC Form 175

46. Applicants must carefully review 47 CFR 1.2105, and must complete all items on the FCC Form 175. Instructions for completing the FCC Form 175 are in Attachment D of this public notice. Applicants are encouraged to begin preparing the required attachments for FCC Form 175 prior to submitting the form. Attachments C and D to this public notice provide information on the required attachments and appropriate formats.

(iii) Electronic Review of FCC Form 175

47. The FCC Form 175 electronic review system may be used to review and print applicants' FCC Form 175 information. Applicants may also view other applicants' completed FCC Form 175s after the filing deadline has passed and the FCC has issued a public notice explaining the status of the applications. For this reason, it is important that applicants do not include their Taxpayer Identification Numbers (TINs) on any Exhibits to their FCC Form 175 applications. See Attachment C for details on accessing the review system.

*C. Application Processing and Minor Corrections*

48. After the deadline for filing the FCC Form 175 applications has passed, the FCC will process all timely submitted applications to determine which are acceptable for filing, and subsequently will issue a public notice identifying: (a) those applications accepted for filing (including FCC account numbers and the licenses for which they applied); (b) those applications rejected; and (c) those applications that have minor defects that may be corrected, and the deadline for filing such corrected applications.

49. As described more fully in the Commission's rules, after the May 9, 2000, short form filing deadline, applicants may make only minor corrections to their FCC Form 175 applications. Applicants will not be permitted to make major modifications to their applications (e.g., change their license selections, change the certifying official, change control of the applicant, or change bidding credit eligibility).

*D. Upfront Payments—Due May 26, 2000*

50. In order to be eligible to bid in the auction, applicants must submit an upfront payment accompanied by a FCC Remittance Advice Form (FCC Form 159). After completing the FCC Form 175, filers will have access to an electronic version of the FCC Form 159 that can be printed and faxed to Mellon Bank in Pittsburgh, PA. All upfront payments must be received at Mellon Bank by 6 p.m. ET on May 26, 2000.

Please note that:

- All payments must be made in U.S. dollars.
- All payments must be made by wire transfer.
- Upfront payments for Auction No. 33 go to a lockbox number different from the ones used in previous FCC auctions, and different from the lockbox number to be used for post-auction payments.
- Failure to deliver the upfront payment by the May 26, 2000 deadline will result in dismissal of the application and disqualification from participation in the auction.

(i) Auction Payments by Wire Transfer

51. Wire transfer payments must be received at Mellon Bank by 6 p.m. ET on May 26, 2000. To avoid untimely payments, applicants should discuss arrangements (including bank closing schedules) with their banker several days before they plan to make the wire transfer, and allow sufficient time for the transfer to be initiated and completed before the deadline. Applicants will need the following information:

ABA Routing Number: 043000261,
Receiving Bank: Mellon Pittsburgh,
BNF: FCC/AC 910–1174, OBI Field:
(Skip one space between each information item)
''AUCTIONPAY'',
TAXPAYER IDENTIFICATION NO.
(same as FCC Form 159, block 26),
PAYMENT TYPE CODE (enter ''A33U''),
FCC CODE 1 (same as FCC Form 159, block 23A: ''33''),
PAYER NAME (same as FCC Form 159, block 2),
LOCKBOX NO. #358405.

**Note:** The BNF and Lockbox number are specific to the upfront payments for this auction; do not use BNF or Lockbox numbers from previous auctions.

52. Applicants must fax a completed FCC Form 159 to Mellon Bank at (412) 236–5702 at least one hour before placing the order for the wire transfer (but on the same business day). On the cover sheet of the fax, write ''Wire Transfer—Auction Payment for Auction Event No. 33.''

*Applicants are strongly encouraged to confirm timely transmission and receipt of their upfront payment at Mellon Bank and can do so by contacting their sending financial institution.*

(ii) FCC Form 159

53. A completed FCC Remittance Advice Form (FCC Form 159) must be faxed to Mellon Bank to accompany each upfront payment wire transfer. Proper completion of FCC Form 159 is critical to ensuring correct credit of upfront payments. Detailed instructions for completion of FCC Form 159 are included in Attachment E to this public

notice. An electronic version of the FCC form 159 is available after submitting the FCC Form 175. The FCC Form 159 can be completed electronically, but must be filed with Mellon Bank via facsimile.

(iii) Amount of Upfront Payment

54. In the Part 1 Order, Memorandum Opinion and Order, and Notice of Proposed Rule Making (*Part 1 Order*), the Commission delegated to the Bureau the authority and discretion to determine an appropriate upfront payment for each license being auctioned. *See* 62 FR 13540 (March 21, 1997). In the *Auction No. 33 Comment Public Notice,* the Bureau proposed upfront payments for Auction No. 33. Several comments were submitted regarding the amount of upfront payments proposed for this auction, and a revised list of upfront payments appears as Attachment A.

55. Comments concerning the proposed upfront payment were submitted by AMTA, and Motorola. According to Motorola, the proposed amounts for upfront payments are extremely high given the level of incumbency and restrictions required of licensees in this band. Furthermore, Motorola argues that a Guard Band Manager, where TV incumbency is an issue, may not realize any return on its license investment until December of 2006 and Guard Band Managers are unlikely to be in a position to assess the nature of adjacent commercial operations prior to bidding. Moreover, Motorola claims that the proposed upfront payments preclude participation by small business and private land mobile coordinators. To address these concerns, Motorola urges that the Bureau use the same formula employed in the 1999 220 MHz auction (''Auction No. 24'') to set minimum opening bids and upfront payments. According to Motorola, applying the formula in this proceeding would result in upfront payments that total $2,108,178 for Block A and $4,209,287 for Block B licenses. AMTA raises similar concerns in recommending that the Commission reduce the upfront payments to one-third or one-quarter of their current valuations. AMTA also notes that this spectrum is affected by the existence of co-channel or adjacent channel television broadcast stations in virtually every market of significant size around the nation and that these licensees are not required to vacate the spectrum until 2006 and that some licensees may be eligible for an extension of that deadline. AMTA cites several other factors, including anticipated interference from Commercial Mobile Radio Service (''CMRS'') operating in the neighboring 30 MHz and the technical requirement that must be adopted to ensure interference protection for public safety systems.

56. In its reply comments, AMTA points out that all parties who addressed this issue took the position that the proposed upfront payments are too high. AMTA cites several factors in support of its position. AMTA urges that the Commission use the upfront payments proposed by Motorola as absolute upper limits, with further reductions in markets that are encumbered. In its reply comments, ITA strongly supports Motorola's alternative formula for use in calculating upfront payments. Similarly, Mobex, in its reply comments, stated that adoption of such a standard will provide better assurance that the Guard Band licenses will be sold, in keeping with the Commission's goals to provide spectrum to the public at a reasonable price in an expeditious manner. MRFAC emphasizes on reply that if the Commission hopes to ensure true competitive bidding between and among a variety of qualified bidders, it should significantly reduce the amounts proposed for upfront payments. On reply, PCIA questions the amount of the proposed upfront payment in light of the incumbency on the channels, the fact that most of the spectrum to be auctioned will be unusable for six years, the fact that the licensing format is new and untested, the cost associated with being a Band Manager, and the level of interference protection that must be provided to adjacent channel public safety systems.

57. Upon careful consideration of the comments and reply comments, the Bureau has decided to exercise its discretion to adjust the upfront payments and has set them forth in Attachment A. The revised figures are approximately one-third of the original proposal. In making this reduction, we recognize the concerns expressed regarding incumbency and interference issues and uncertainty in when the spectrum may become unencumbered. We also respond to concerns raised concerning the opportunity for small businesses to participate in this auction.

58. Please note that upfront payments are not attributed to specific licenses, but instead will be translated to bidding units to define a bidder's maximum bidding eligibility. For Auction No. 33, the amount of the upfront payment will be translated into bidding units on a one-to-one basis, *e.g.,* a $1,000,000 upfront payment provides the bidder with 1,000,000 bidding units. The total upfront payment defines the maximum number of bidding units on which the applicant will be permitted to bid (including standing high bids) in any single round of bidding. Thus, an applicant does not have to make an upfront payment to cover all licenses that an applicant has selected on FCC Form 175, but rather to cover the maximum number of bidding units that are associated with licenses on which the bidder wishes to place bids and hold high bids at any given time.

59. In order to be able to place a bid on a license, in addition to having specified that license on the FCC Form 175, a bidder must have an eligibility level that meets or exceeds the number of bidding units assigned to that license. At a minimum, an applicant's total upfront payment must be enough to establish eligibility to bid on at least one of the licenses applied for on the FCC Form 175, or else the applicant will not be eligible to participate in the auction.

60. In calculating its upfront payment amount, an applicant should determine the *maximum* number of bidding units it may wish to bid on in any single round, and submit an upfront payment covering that number of bidding units. In order to make this calculation, an applicant should add together the upfront payments for all licenses on which it seeks to bid in any given round. Bidders should check their calculations carefully as there is no provision for increasing a bidder's maximum eligibility after the upfront payment deadline.

**Note:** An applicant may, on its FCC Form 175, apply for every license being offered, but its actual bidding in any round will be limited by the bidding units reflected in its upfront payment.

(iv) Applicant's Wire Transfer Information for Purposes of Refunds

61. The Commission will use wire transfers for all Auction No. 33 refunds. To ensure that refunds of upfront payments are processed in an expeditious manner, the Commission is requesting that all pertinent information as listed be supplied to the FCC. Applicants may either submit the information electronically after filing their short-form application or fax the wire transfer instructions by May 26, 2000, to the FCC, Financial Operations Center, Auctions Accounting Group, ATTN: Michelle Bennett or Gail Glasser, at (202) 418–2843. Should the payer fail to submit the requested information, the refund will be returned to the original payer. For additional information, please call (202) 418–1995.

Name of Bank, ABA Number, Contact and Phone Number, Account Number to Credit, Name of Account Holder,

Correspondent Bank (if applicable), ABA Number, Account Number.

(Applicants should also note that implementation of the Debt Collection Improvement Act of 1996 requires the FCC to obtain a Taxpayer Identification Number (TIN) before it can disburse refunds.) Eligibility for refunds is discussed in part V.D.

*E. Auction Registration*

62. Approximately ten days before the auction, the FCC will issue a public notice announcing all qualified bidders for the auction. Qualified bidders are those applicants whose FCC Form 175 applications have been accepted for filing and have timely submitted upfront payments sufficient to make them eligible to bid on at least one of the licenses for which they applied.

63. All qualified bidders are automatically registered for the auction. Registration materials will be distributed prior to the auction by two separate overnight mailings, each containing a portion of the confidential identification codes required to place bids. These mailings will be sent only to the contact person at the contact address listed in the FCC Form 175.

64. Applicants that do not receive both registration mailings will not be able to submit bids. Therefore, any qualified applicant that has not received both mailings by noon on Friday, June 9, 2000, must contact the Auctions Hotline at 717–338–2888. Receipt of both registration mailings is critical to participating in the auction and each applicant is responsible for ensuring it has received all of the registration material.

65. Qualified bidders should note that lost login codes, passwords or bidder identification numbers can be replaced only by appearing *in person* at the FCC Auction Headquarters located at 445 12th St., SW, Washington, DC 20554. Only an authorized representative or certifying official, as designated on the applicant's FCC Form 175, may appear in person with two forms of identification (one of which must be a photo identification) in order to receive replacement codes. Qualified bidders requiring replacement codes must call technical support prior to arriving at the FCC to arrange preparation of new codes.

*F. Remote Electronic Bidding Software*

66. Qualified bidders are allowed to bid electronically or by telephone. If choosing to bid electronically, each bidder must purchase their own copy of the remote electronic bidding software. Electronic bids will only be accepted from those applicants purchasing the software. However, the software may be copied by the applicant for use by its authorized bidders at different locations. The price of the FCC's remote bidding software is $175.00 and must be ordered by Tuesday, May 30, 2000. For security purposes, the software is only mailed to the contact person at the contact address listed on the FCC Form 175. Please note that auction software is tailored to a specific auction, so software from prior auctions will not work for Auction No. 33. If bidding telephonically, the telephonic bidding phone number will be supplied in the second Federal Express mailing of confidential login codes. Qualified bidders that do not purchase the software may only bid telephonically. To indicate your bidding preference, an FCC Bidding Preference/Remote Software Order Form can be accessed when submitting the FCC Form 175 and completed electronically. A copy of this form is included as Attachment F in this public notice.

*G. Mock Auction*

67. All qualified bidders will be eligible to participate in a mock auction scheduled for Monday, June 12, 2000. The mock auction will enable applicants to become familiar with the electronic software prior to the auction. Free demonstration software will be available for use in the mock auction. Participation by all bidders is strongly recommended. Details will be announced by public notice.

**IV. Auction Event**

68. The first round of bidding for Auction No. 33 will begin on Wednesday, June 14, 2000. The initial bidding schedule will be announced in the public notice listing the qualified bidders which is released approximately 10 days before the start of the auction.

*A. Auction Structure*

(i) Simultaneous Multiple Round Auction

69. In the *Auction No. 33 Comment Public Notice*, we proposed to award 104 Guard Band Manager licenses in the 700 MHz guard bands in a single, simultaneous multiple round auction. We received no comment on this issue. We conclude that it is operationally feasible and appropriate to auction the 700 MHz Guard Band manager licenses through a single, simultaneous multiple round auction. Unless otherwise announced, bids will be accepted on all licenses in each round of the auction. This approach, we believe, allows bidders to take advantage of any synergies that exist among licenses and is most administratively efficient. For Auction No. 33, no applicant may be deemed the winning bidder of both the Block A and the Block B license in a single geographic service area.

(ii) Maximum Eligibility and Activity Rules

70. In the *Auction No. 33 Comment Public Notice*, we proposed that the amount of the upfront payment submitted by a bidder would determine the initial maximum eligibility (as measured in bidding units) for each bidder. We received no comments on this issue.

71. For Auction No. 33 we will adopt this proposal. The amount of the upfront payment submitted by a bidder determines the initial maximum eligibility (in bidding units) for each bidder. Note again that upfront payments are not attributed to specific licenses, but instead will be translated into bidding units to define a bidder's initial maximum eligibility. The total upfront payment defines the maximum number of bidding units on which the applicant will initially be permitted to bid. As there is no provision for increasing a bidder's maximum eligibility during the course of an auction (as described under ''Auction Stages'' as set forth in part IV.A.(iv), prospective bidders are cautioned to calculate their upfront payments carefully. The total upfront payment does not define the total dollars a bidder may bid on any given license.

72. In order to ensure that the auction closes within a reasonable period of time, an activity rule requires bidders to bid actively throughout the auction, rather than wait until the end before participating. Bidders are required to be active on a specific percentage of their maximum eligibility during each round of the auction.

73. A bidder's activity level in a round is the sum of the bidding units associated with licenses on which the bidder is active. A bidder is considered active on a license in the current round if it is either the high bidder at the end of the previous bidding round and does not withdraw the high bid in the current round, or if it submits an acceptable bid in the current round (*see* ''Minimum Accepted Bids'' in part IV.B.(iii)). The minimum required activity level is expressed as a percentage of the bidder's maximum bidding eligibility, and increases by stage as the auction progresses. Because these procedures have proven successful in maintaining the pace of previous auctions as set forth under ''Auction Stages'' in part IV.A.(iv) and ''Stage Transitions'' in part

IV.A.(v), we adopt them for Auction No. 33.

(iii) Activity Rule Waivers and Reducing Eligibility

74. In the *Auction No. 33 Comment Public Notice*, we proposed that each bidder in the auction would be provided five activity rule waivers that may be used in any round during the course of the auction. We received no comment on this issue.

75. Based upon our experience in previous auctions, we adopt our proposal that each bidder be provided five activity rule waivers that may be used in any round during the course of the auction. Use of an activity rule waiver preserves the bidder's current bidding eligibility despite the bidder's activity in the current round being below the required minimum level. An activity rule waiver applies to an entire round of bidding and not to a particular license. We are satisfied that our practice of providing five waivers over the course of the auction provides a sufficient number of waivers and maximum flexibility to the bidders, while safeguarding the integrity of the auction.

76. The FCC automated auction system assumes that bidders with insufficient activity would prefer to use an activity rule waiver (if available) rather than lose bidding eligibility. Therefore, the system will automatically apply a waiver (known as an ''automatic waiver'') at the end of any round where a bidder's activity level is below the minimum required unless: (a) There are no activity rule waivers available; or (b) the bidder overrides the automatic application of a waiver by reducing eligibility, thereby meeting the minimum requirements.

77. A bidder with insufficient activity that wants to reduce its bidding eligibility rather than use an activity rule waiver must affirmatively override the automatic waiver mechanism during the round by using the reduce eligibility function in the software. In this case, the bidder's eligibility is permanently reduced to bring the bidder into compliance with the activity rules as described in ''Auction Stages'' (*see* part IV.A.(iv)). Once eligibility has been reduced, a bidder will not be permitted to regain its lost bidding eligibility.

78. Finally, a bidder may proactively use an activity rule waiver as a means to keep the auction open without placing a bid. If a bidder submits a proactive waiver (using the proactive waiver function in the bidding software) during a round in which no bids are submitted, the auction will remain open and the bidder's eligibility will be preserved. An automatic waiver invoked in a round in which there are no new valid bids or withdrawals will not keep the auction open.

(iv) Auction Stages

79. In the *Auction No. 33 Comment Public Notice*, we proposed to conduct the auction in three stages and employ an activity rule. We further proposed that, in each round of Stage One, a bidder desiring to maintain its current eligibility would be required to be active on licenses encompassing at least 80 percent of its current bidding eligibility. In each round of Stage Two, a bidder desiring to maintain its current eligibility would be required to be active on at least 90 percent of its current bidding eligibility. Finally, we proposed that a bidder in Stage Three, in order to maintain eligibility, would be required to be active on 98 percent of its current bidding eligibility. We received no comment on these proposals.

80. We conclude that the auction will be composed of three stages, which are each defined by an increasing activity rule. We will adopt our proposals for the activity rules. Here are the activity levels for each stage of the auction. The FCC reserves the discretion to further alter the activity percentages before and/or during the auction.

*Stage One:* During the first stage of the auction, a bidder desiring to maintain its current eligibility will be required to be active on licenses that represent at least 80 percent of its current bidding eligibility in each bidding round. Failure to maintain the required activity level will result in a reduction in the bidder's bidding eligibility in the next round of bidding (unless an activity rule waiver is used). During Stage One, reduced eligibility for the next round will be calculated by multiplying the sum of bidding units of the bidder's standing high bids and valid bids during the current round by five-fourths (5/4).

*Stage Two:* During the second stage of the auction, a bidder desiring to maintain its current eligibility is required to be active on 90 percent of its current bidding eligibility. Failure to maintain the required activity level will result in a reduction in the bidder's bidding eligibility in the next round of bidding (unless an activity rule waiver is used). During Stage Two, reduced eligibility for the next round will be calculated by multiplying the sum of bidding units of the bidder's standing high bids and valid bids during the current round by ten-ninths (10/9).

*Stage Three:* During the third stage of the auction, a bidder desiring to maintain its current eligibility is required to be active on 98 percent of its current bidding eligibility. Failure to maintain the required activity level will result in a reduction in the bidder's bidding eligibility in the next round of bidding (unless an activity rule waiver is used). In this final stage, reduced eligibility for the next round will be calculated by multiplying the sum of bidding units of the bidder's standing high bids and valid bids during the current round by fifty-fortyninths (50/49).

CAUTION: Since activity requirements increase in each auction stage, bidders must carefully check their current activity during the bidding period of the first round following a stage transition. This is especially critical for bidders that have standing high bids and do not plan to submit new bids. In past auctions, some bidders have inadvertently lost bidding eligibility or used an activity rule waiver because they did not re-verify their activity status at stage transitions. Bidders may check their activity against the required minimum activity level by using the bidding software's bidding module.

Because the foregoing procedures have proven successful in maintaining proper pace in previous auctions, we adopt them for Auction No. 33.

(v) Stage Transitions

81. In the *Auction No. 33 Comment Public Notice,* we proposed that the auction would generally advance to the next stage (*i.e.*, from Stage One to Stage Two, and from Stage Two to Stage Three) when the auction activity level, as measured by the percentage of bidding units receiving new high bids, is below 10 percent for three consecutive rounds of bidding in each stage. However, we further proposed that the Bureau would retain the discretion to change stages unilaterally by announcement during the auction. This determination, we proposed, would be based on a variety of measures of bidder activity, including, but not limited to, the auction activity level, the percentages of licenses (as measured in bidding units) on which there are new bids, the number of new bids, and the percentage increase in revenue. We received no comments on this subject.

82. We adopt our proposal. Thus, the auction will start in Stage One. Under the FCC's general guidelines the auction will start in Stage One and will advance to the next stage (*i.e.*, from Stage One to Stage Two, and from Stage Two to Stage Three) when, in each of three consecutive rounds of bidding, the high bid has increased on 10 percent or less of the licenses being auctioned (as measured in bidding units). However,

the Bureau will retain the discretion to regulate the pace of the auction by announcement. This determination will be based on a variety of measures of bidder activity, including, but not limited to, the auction activity level, the percentages of licenses (as measured in bidding units) on which there are new bids, the number of new bids, and the percentage increase in revenue. We believe that these stage transition rules, having proven successful in prior auctions, are appropriate for use in Auction No. 33.

(vi) Auction Stopping Rules

83. For Auction No. 33, the Bureau proposed to employ a simultaneous stopping rule. Under this rule, bidding will remain open on all licenses until bidding stops on every license. The auction will close for all licenses when one round passes during which no bidder submits a new acceptable bid on any license, applies a proactive waiver, or withdraws a previous high bid. After the first such round, bidding closes simultaneously on all licenses.

84. The Bureau also proposed a modified version of the simultaneous stopping rule. This modified version will close the auction for all licenses after the first round in which no bidder submits a proactive waiver, a withdrawal, or a new bid on any license on which it is not the standing high bidder. Thus, absent any other bidding activity, a bidder placing a new bid on a license for which it is the standing high bidder will not keep the auction open under this modified stopping rule. The Bureau further sought comment on whether this modified stopping rule should be used unilaterally or only in stage three of the auction.

85. The Bureau further proposed retaining the discretion to keep an auction open even if no new acceptable bids or proactive waivers are submitted and no previous high bids are withdrawn in a round. In this event, the effect will be the same as if a bidder had submitted a proactive waiver. Thus, the activity rule will apply as usual, and a bidder with insufficient activity will either lose bidding eligibility or use an activity rule waiver (if it has any left).

86. In addition, we proposed that the Bureau reserve the right to declare that the auction will end after a specified number of additional rounds (''special stopping rule''). If the Bureau invokes this special stopping rule, it will accept bids in the final round(s) only for licenses on which the high bid increased in at least one of the preceding specified number of rounds. We proposed to exercise this option only in circumstances such as where the auction is proceeding very slowly, where there is minimal overall bidding activity or where it appears likely that the auction will not close within a reasonable period of time. Before exercising this option, the Bureau is likely to attempt to increase the pace of the auction by, for example, moving the auction into the next stage where bidders will be required to maintain a higher level of bidding activity), increasing the number of bidding rounds per day.

87. No comments were received on any of these issues therefore we adopt all of the proposals concerning the auction stopping rules. Auction No. 33 will begin under the simultaneous stopping rule, and the Bureau will retain the discretion to invoke the other versions of the stopping rule. Adoption of these rules, we believe, is most appropriate for Auction No. 33 because our experience in prior auctions demonstrates that the auction stopping rules balance the interests of administrative efficiency and maximum bidder participation. The substitutability between and among licenses in different geographic areas and the importance of preserving the ability of bidders to pursue backup strategies support the use of these stopping rules.

(vii) Auction Delay, Suspension, or Cancellation

88. In the *Auction No. 33 Comment Public Notice*, we proposed that, by public notice or by announcement during the auction, the Bureau may delay, suspend, or cancel the auction in the event of natural disaster, technical obstacle, evidence of an auction security breach, unlawful bidding activity, administrative or weather necessity, or for any other reason that affects the fair and competitive conduct of competitive bidding.

89. Because this approach has proven effective in resolving exigent circumstances in previous auctions, we will adopt our proposed auction cancellation rules. By public notice or by announcement during the auction, the Bureau may delay, suspend or cancel the auction in the event of natural disaster, technical obstacle, evidence of an auction security breach, unlawful bidding activity, administrative or weather necessity, or for any other reason that affects the fair and competitive conduct of competitive bidding. In such cases, the Bureau, in its sole discretion, may elect to: resume the auction starting from the beginning of the current round; resume the auction starting from some previous round; or cancel the auction in its entirety. Network interruption may cause the Bureau to delay or suspend the auction. We emphasize that exercise of this authority is solely within the discretion of the Bureau, and its use is not intended to be a substitute for situations in which bidders may wish to apply their activity rule waivers.

*B. Bidding Procedures*

(i) Round Structure

90. The initial bidding schedule will be announced in the public notice listing the qualified bidders which is released approximately 10 days before the start of the auction. This public notice will be included with the registration mailings. The round structure for each bidding round contains a single bidding round followed by the release of the round results. Multiple bidding rounds may be conducted in a given day. Details regarding round results formats and locations will be included in the Qualified Bidder Public Notice.

91. The FCC has discretion to change the bidding schedule in order to foster an auction pace that reasonably balances speed with the bidders' need to study round results and adjust their bidding strategies. The FCC may increase or decrease the amount of time for the bidding rounds and review periods, or the number of rounds per day, depending upon the bidding activity level and other factors.

(ii) Reserve Price or Minimum Opening Bid

92. *Background*. The Balanced Budget Act of 1997 calls upon the Commission to prescribe methods by which a reasonable reserve price will be required or a minimum opening bid established when FCC licenses are subject to auction (*i.e.*, because they are mutually exclusive), unless the Commission determines that a reserve price or minimum opening bid is not in the public interest. Consistent with this mandate, the Commission directed the Bureau to seek comment on the use of a minimum opening bid and/or reserve price prior to the start of each auction. *See* FCC 97–413, Amendment of Part 1 of the Commission's Rules-Competitive Bidding Procedures (*Third Report and Order*) 63 FR 770 (January 7, 1998). Among other factors, the Bureau must consider the amount of spectrum being auctioned, levels of incumbency, the availability of technology to provide service, the size of the geographic service areas, the extent of interference with other spectrum bands, and any other relevant factors that could have an impact on valuation of the spectrum

being auctioned. The Commission concluded that the Bureau should have the discretion to employ either or both of these mechanisms for future auctions.

93. In the *Auction No. 33 Comment Public Notice*, the Bureau proposed to establish minimum opening bids for Auction No. 33 and to retain discretion to lower the minimum opening bids. Specifically, for Auction No. 33, the Commission proposed calculating the minimum opening bid based on information available in the form of a Congressional estimate of the value of the spectrum. In response to the *Auction No. 33 Comment Public Notice,* AMTA, ITA, Mobex and Motorola all filed comments concerning the proposed minimum opening bids.

94. In its comments, AMTA states that it is unlikely that its members will elect to participate unless the Commission significantly reduces the minimum opening bids proposed for the Guard Band spectrum. AMTA cites several factors in support of its position. First AMTA points out that the Guard Band spectrum will not become available until 2006 and that deadline may be further extended. Also AMTA asserts that the Guard Band spectrum is susceptible to interference from CMRS systems operating in the neighboring 30 MHz and that the economic utility of the Guard Band allocation will be affected by the technical requirements adopted to ensure interference protection for public safety systems. According to AMTA, these factors support a reduction to one-third or one-quarter of the proposed valuations in minimum opening bids in the Guard Band auction.

95. ITA claims that the Commission needs to revisit the amount set for the minimum opening bids in order to give consideration to the interference protection that must be provided public safety users. According to ITA, the protection requirements have the potential to erode the ability of the Guard Band Manager to fully maximize use of the spectrum. Further, according to ITA, the Guard Band Manager must also consider potential interference from adjacent band commercial users and avoid causing interference to incumbent broadcast operations. ITA argues that basing minimum bids upon traditional calculations, when there is the possibility that use of the spectrum cannot be fully maximized simply makes it that much more difficult to attract a wide pool of prospective Guard Band Managers. In view of these factors, ITA strongly encourages the Commission to reevaluate the methodology it used in setting the opening minimum bids. ITA did not state what minimum opening bid would be appropriate.

96. Mobex claims that the minimum opening bids: (i) Are cost prohibitive for most small businesses; (ii) contradict the requirements of the 1996 Telecommunications Act, specifically section 309(j); and (iii) will have a long term negative impact on the few remaining small businesses in the SMR industry, including Mobex. According to Mobex, the Commission's excessive minimum opening bids effectively preclude countless small businesses from realistically participating in the auction proceeding. Mobex cites to section 309(j) of the Telecommunications Act, which Mobex says requires the Commission to avoid excessive concentration of licenses by disseminating licenses among a wide variety of applicants, including small businesses. Mobex did not indicate what would be a more acceptable minimum opening bid.

97. Motorola argues that the proposed minimum opening bid amounts fail to account for: (i) The presence of incumbent broadcast stations; (ii) the possibility of interference from adjacent commercial licensees; and (iii) the barrier to entry these amounts present for small businesses and associations likely to be interested in the role of Guard Band Manager. Motorola further argues that the Commission did not explain the valuation expected for the Guard Band licenses as compared to the amount anticipated to be raised by the licenses available on the other 30 megahertz of spectrum allocated for commercial use in the 700 MHz band. Thus, Motorola says that it has no way of knowing what specific value the Bureau placed on the Guard Band spectrum. Motorola adds that because of TV incumbency issues, there are some markets where a Guard Band Manager may not be able to recognize a return on its license until December, 2006. Further, Motorola claims that the Guard Band spectrum faces potential interference from users of the remaining 30 megahertz of commercial spectrum in the 700 MHz band. Moreover, Motorola argues that the current values for upfront payments preclude small businesses and private land mobile frequency coordinators from participation in the auction. Motorola asserts that the bidding credits do not help because the credits are not applied to upfront payment amounts and the time constraints to raise the capital are extremely short due to the Congressional requirement to deposit the proceeds by September 30, 2000. Motorola recommends that the Bureau use the same formula that it used in setting the minimum opening bids for the 220 MHz spectrum in Auction No. 24 and that the Bureau maintain the 33% ratio, used in this proceeding, between minimum opening bids and upfront payments. Furthermore, Motorola claims that markets which are encumbered should be subject to a further reduction in minimum opening bids.

98. Reply comments were submitted by AMTA, ITA, Mobex , MRFAC, and PCIA.

99. On reply, AMTA notes that all of the initial comments filed in this proceeding took the position that the proposed minimum opening bids were unreasonably high. AMTA says that collectively the factors cited by commenters support a reduction in both the upfront payment and minimum opening bids in Auction No. 33. AMTA argues that those few parties that are able to participate in the auction will have to pass on unreasonably high acquisition costs to potential lessees, thus negatively impacting, if not eliminating, participation by small businesses. AMTA reiterates that the Commission should reduce the upfront payments and the minimum opening bids for the Guard Band spectrum to one-third or one-quarter of their current valuations to bring the valuations in line with the 220 MHz auction figures. AMTA concludes by stating that it supports Motorola's proposal to maintain a ratio of 33% between minimum opening bids and upfront payments and that the Commission should use Motorola's proposal as the absolute upper limits, with further reductions in markets that are encumbered.

100. In its reply comments, ITA also notes that all of those filing comments agreed that the Commission should revisit the amount of minimum opening bids. According to ITA, because the guard band manager must protect public safety users from interference, while avoiding interference to incumbent broadcast operations, it is much more difficult to attract a wide pool of prospective bidders. ITA states that it supports Motorola's proposal to apply the valuations used in the 220 MHz auction to set upfront payments and minimum opening bids.

101. In its reply comments, Mobex notes that all parties who submitted initial comments are in agreement that the Commission's proposed minimum opening bids would be cost prohibitive for many small businesses Mobex states that the Commission should reduce the valuation for the Guard Band, citing arguments of potential interference from users within the 30 megahertz block, the

lack of out-of-band limitations on the 30 megahertz block, the requirement to protect public safety users, and the existence of co-channel or adjacent channel television broadcast stations in virtually every market of significant size around the nation. Mobex also notes that a financial return on the guard band spectrum may be delayed until December, 2006 and beyond. In view of the foregoing, Mobex urges the Commission to adopt the valuations proposed by Motorola in this proceeding.

102. MRFAC states that the minimum opening bid amounts are too high, considering that the spectrum in many of these markets will be encumbered until December, 2006, or even beyond. According to MRFAC, no rational investor would risk these kind of sums for an encumbered asset. MRFAC, therefore, urges that the Commission use minimum opening bids that are in line with those for the 220 MHz auction.

103. As in the case of the amount of upfront payments, the Bureau is persuaded by the comments and reply comments that it is appropriate to make a downward adjustment in the minimum opening bids. In doing so, we recognize concerns expressed with regard to when the spectrum may become available, interference and technical issues, and other factors cited in response to the *Auction No. 33 Comment Public Notice*. Accordingly, the Bureau has lowered the proposed minimum opening bids for the licenses in the Guard Band, establishing minimum opening bids that are approximately one-third of the original proposal, as set forth in Attachment A.

(iii) Bid Increments and Minimum Accepted Bids

104. In the *Auction No. 33 Comment Public Notice,* we proposed to use a smoothing methodology to calculate minimum bid increments. We further proposed to retain the discretion to change the minimum bid increment if circumstances so dictate. We received no comment on this issue.

105. We will adopt our proposal for a smoothing formula. The smoothing methodology is designed to vary the increment for a given license between a maximum and minimum value based on the bidding activity on that license. This methodology allows the increments to be tailored to the activity level of a license, decreasing the time it takes for active licenses to reach their final value. The formula used to calculate this increment is included as Attachment G.

106. We adopt our proposal of initial values for the maximum of 0.2, or 20 percent of the license value, and a minimum of 0.1, or 10 percent of the license value. The Bureau retains the discretion to change the minimum bid increment if it determines that circumstances so dictate. The Bureau will do so by announcement in the Automated Auction System. Under its discretion, the Bureau may also implement an absolute dollar floor for the bid increment to further facilitate a timely close of the auction. The Bureau may also use its discretion to adjust the minimum bid increment without prior notice if circumstances warrant. As an alternative approach, the Bureau may, in its discretion, adjust the minimum bid increment gradually over a number of rounds as opposed to single large changes in the minimum bid increment (*e.g.*, by raising the increment floor by one percent every round over the course of ten rounds). The Bureau also retains the discretion to use alternate methodologies, such as a flat percentage increment for all licenses, for Auction No. 33 if circumstances warrant.

(iv) High Bids

107. Each bid will be date-and time-stamped when it is entered into the FCC computer system. In the event of tie bids, the Commission will identify the high bidder on the basis of the order in which the Commission receives bids. The bidding software allows bidders to make multiple submissions in a round. As each bid is individually date-and time-stamped according to when it was submitted, bids submitted by a bidder earlier in a round will have an earlier date and time stamp than bids submitted later in a round.

(v) Bidding

108. During a bidding round, a bidder may submit bids for as many licenses as it wishes, subject to its eligibility, as well as withdraw high bids from previous bidding rounds, remove bids placed in the same bidding round, or permanently reduce eligibility. Bidders also have the option of making multiple submissions and withdrawals in each bidding round. If a bidder submits multiple bids for a single license in the same round, the system takes the last bid entered as that bidder's bid for the round, and the date-and time-stamp of that bid reflects the latest time the bid was submitted.

109. Please note that all bidding will take place remotely either through the automated bidding software or by telephonic bidding. (Telephonic bid assistants are required to use a script when entering bids placed by telephone. Telephonic bidders are therefore reminded to allow sufficient time to bid by placing their calls well in advance of the close of a round. Normally, four to five minutes are necessary to complete a bid submission.) There will be no on-site bidding during Auction No. 33.

110. A bidder's ability to bid on specific licenses in the first round of the auction is determined by two factors: (a) the licenses applied for on FCC Form 175; and (b) the upfront payment amount deposited. The bid submission screens will be tailored for each bidder to include only those licenses for which the bidder applied on its FCC Form 175. A bidder also has the option to further tailor its bid submission screens to call up specified groups of licenses.

111. The bidding software requires each bidder to login to the FCC auction system during the bidding round using the FCC account number, bidder identification number, and the confidential security codes provided in the registration materials. Bidders are strongly encouraged to download and print bid confirmations *after* they submit their bids.

112. The bid entry screen of the automated auction system software for Auction No. 33 allows bidders to place multiple increment bids, which will let bidders increase high bids from one to nine bid increments. A single bid increment is defined as the difference between the standing high bid and the minimum acceptable bid for a license. The bidding software will display the bid increment for each license.

113. To place a bid on a license, the bidder must increase the standing high bid by one to nine times the bid increment. This is done by entering a whole number between 1 and 9 in the bid increment multiplier (Bid Mult) field in the software. This value will determine the amount of the bid (Amount Bid) by multiplying the bid increment multiplier by the bid increment and adding the result to the high bid amount according to the following formula:

Amount Bid = High Bid + (Bid Mult * Bid Increment)

114. Thus, bidders may place a bid that exceeds the standing high bid by between one and nine times the bid increment. For example, to bid the minimum acceptable bid, which is equal to one bid increment, a bidder will enter ''1'' in the bid increment multiplier column and press submit.

115. For any license on which the FCC is designated as the high bidder (*i.e.*, a license that has not yet received a bid in the auction or where the high bid was withdrawn and a new bid has not yet been placed), bidders will be limited to bidding only the minimum acceptable bid. In both of these cases no

increment exists for the licenses, and bidders should enter ''1'' in the Bid Mult field. Note that in this case, any whole number between 1 and 9 entered in the multiplier column will result in a bid value at the minimum acceptable bid amount. Finally, bidders are cautioned in entering numbers in the Bid Mult field because, as explained in the following section, a high bidder that withdraws its standing high bid from a previous round, even if mistakenly or erroneously made, is subject to bid withdrawal payments.

(vi) Bid Removal and Bid Withdrawal

116. In the *Auction No. 33 Comment Public Notice,* we proposed bid removal and bid withdrawal rules. With respect to bid withdrawals, we proposed limiting each bidder to withdrawals in no more than two rounds during the course of the auction. The two rounds in which withdrawals are utilized, we proposed, would be at the bidder's discretion. We received no comment on this issue.

117. In previous auctions, we have detected bidder conduct that, arguably, may have constituted strategic bidding through the use of bid withdrawals. While we continue to recognize the important role that bid withdrawals play in an auction, *i.e.*, reducing risk associated with efforts to secure various geographic area licenses in combination, we conclude that, for Auction No. 33, adoption of a limit on their use to two rounds is the most appropriate outcome. By doing so we believe we strike a reasonable compromise that will allow bidders to use withdrawals. Our decision on this issue is based upon our experience in prior auctions, particularly the PCS D, E and F block auctions, and 800 MHz SMR auction, and is in no way a reflection of our view regarding the likelihood of any speculation or ''gaming'' in this auction.

118. The Bureau will therefore limit the number of rounds in which bidders may place withdrawals to two rounds. These rounds will be at the bidder's discretion and there will be no limit on the number of bids that may be withdrawn in either of these rounds. Withdrawals during the auction will still be subject to the bid withdrawal payments specified in 47 CFR 1.2104(g). Bidders should note that abuse of the Commission's bid withdrawal procedures could result in the denial of the ability to bid on a market. If a high bid is withdrawn, the license will be offered in the next round at the second highest bid price, which may be less than, or equal to, in the case of tie bids, the amount of the withdrawn bid, without any bid increment. The Commission will serve as a ''place holder'' on the license until a new acceptable bid is submitted on that license.

119. *Procedures.* Before the close of a bidding round, a bidder has the option of removing any bids placed in that round. By using the ''remove bid'' function in the software, a bidder may effectively ''unsubmit'' any bid placed within that round. A bidder removing a bid placed in the same round is not subject to withdrawal payments. Removing a bid will affect a bidder's activity for the round in which it is removed, *i.e.* a bid that is subsequently removed does not count toward the bidder's activity requirement. This procedure, about which we received no comments, will enhance bidder flexibility during the auction. Therefore, we will adopt these procedures for Auction No. 33.

120. Once a round closes, a bidder may no longer remove a bid. However, in the next round, a bidder may withdraw standing high bids from previous rounds using the ''withdraw bid'' function (assuming that the bidder has not exhausted its withdrawal allowance). A high bidder that withdraws its standing high bid from a previous round during the auction is subject to the bid withdrawal payments specified in 47 CFR 1.2104(g). The procedure for withdrawing a bid and receiving a withdrawal confirmation is essentially the same as the bidding procedure described in ''High Bids,'' part IV.B.(iv).

121. *Calculation.* Generally, the Commission imposes payments on bidders that withdraw high bids during the course of an auction. Specifically, a bidder (''Bidder X'') that withdraws a high bid during the course of an auction is subject to a bid withdrawal payment equal to the difference between the amount withdrawn and the amount of the subsequent winning bid. If a high bid is withdrawn on a license that remains unsold at the close of the auction, Bidder X will be required to make an interim payment equal to three (3) percent of the net amount of the withdrawn bid. This payment amount is deducted from any upfront payments or down payments that Bidder X has deposited with the Commission. If, in a subsequent auction, that license receives a valid bid in an amount equal to or greater than the withdrawn bid amount, then no final bid withdrawal payment will be assessed, and Bidder X may request a refund of the interim three (3) percent payment. If, in a subsequent auction, the selling price for that license is less than Bidder X's withdrawn bid amount, then Bidder X will be required to make a final bid withdrawal payment, less the three percent interim payment, equal to either the difference between Bidder X's net withdrawn bid and the subsequent net winning bid, or the difference between Bidder X's gross withdrawn bid and the subsequent gross winning bid, whichever is less.

(vii) Round Results

122. Bids placed during a round will not be published until the conclusion of that bidding period. After a round closes, the Commission will compile reports of all bids placed, bids withdrawn, current high bids, new minimum accepted bids, and bidder eligibility status (bidding eligibility and activity rule waivers), and post the reports for public access. Reports reflecting bidders' identities and bidder identification numbers for Auction No. 33 will be available before and during the auction. Thus, bidders will know in advance of this auction the identities of the bidders against which they are bidding.

(viii) Auction Announcements

123. The FCC will use auction announcements to announce items such as schedule changes and stage transitions. All FCC auction announcements will be available on the FCC remote electronic bidding system, as well as on the Internet.

(ix) Maintaining the Accuracy of FCC Form 175 Information

124. As noted in part II.E., after the short-form filing deadline, applicants may make only minor changes to their FCC Form 175 applications. For example, permissible minor changes include deletion and addition of authorized bidders (to a maximum of three) and certain revisions to exhibits. Filers must make these changes on-line, and submit a letter summarizing these changes to: Amy Zoslov, Chief, Auctions and Industry Analysis Division, Wireless Telecommunications Bureau, Federal Communications Commission, 445 12th Street, S.W., Washington, D.C. 20554.

A separate copy of the letter should be mailed to Howard Davenport, Auctions and Industry Analysis Division), briefly summarizing the changes. Questions about other changes should be directed to Howard Davenport, Auctions and Industry Analysis Division at (202) 418–0660.

**V. Post-Auction Procedures**

*A. Down Payments and Withdrawn Bid Payments*

125. After bidding has ended, the Commission will issue a public notice declaring the auction closed, identifying the winning bids and bidders for each license, and listing bid withdrawal payments due.

126. Within ten business days after release of the auction closing public notice, each winning bidder must submit sufficient funds (in addition to its upfront payment) to bring its total amount of money on deposit with the Government to 20 percent of its net winning bids (actual bids less any applicable bidding credits). *See* 47 CFR 1.2107(b). In addition, by the same deadline all bidders must pay any withdrawn bid amounts due under 47 CFR 1.2104(g), as discussed in ''Bid Removal and Bid Withdrawal,'' part IV.B.(vi). (Upfront payments are applied first to satisfy any withdrawn bid liability, before being applied toward down payments.) In the *700 MHz Second Report and Order,* in light of the statutory deadline for depositing auction proceeds, the Commission delegated to the Bureau authority to suspend payment deadlines and require that winning bidders on all licenses in the 700 MHz bands pay the full balance of their winning bids upon submission of their long-form application. (*See* 700 MHz Second Report and Order at ¶ 105.) The Bureau will announce via Public Notice if it chooses to exercise this authority.

*B. Long-Form Application*

127. Within ten business days after release of the auction closing public notice, winning bidders must file: (1) FCC Form 601 and all required exhibits electronically via the Universal Licensing System (''ULS''); and (2) FCC Form 602 manually pursuant to § 1.919 of the Commission's Rules. Winning bidders may file a single application for all markets won at auction. Winning bidders that are small businesses or very small businesses must include and exhibit demonstrating their eligibility for bidding credits. *See* 47 CFR 1.2112(b). Further, more detailed filing instructions will be provided to auction winners at the close of the auction.

*C. Default and Disqualification*

128. Any high bidder that defaults or is disqualified after the close of the auction (*i.e.*, fails to remit the required down payment within the prescribed period of time, fails to submit a timely long-form application, fails to make full payment, or is otherwise disqualified) will be subject to the payments described in 47 CFR 1.2104(g)(2). In such event the Commission may re-auction the license or offer it to the next highest bidder (in descending order) at their final bid. *See* 47 CFR 1.2109(b) and (c). In addition, if a default or disqualification involves gross misconduct, misrepresentation, or bad faith by an applicant, the Commission may declare the applicant and its principals ineligible to bid in future auctions, and may take any other action that it deems necessary, including institution of proceedings to revoke any existing licenses held by the applicant. *See* 47 CFR 1.2109(d).

*D. Refund of Remaining Upfront Payment Balance*

129. All applicants that submitted upfront payments but were not winning bidders for a 700 MHz guard band license may be entitled to a refund of their remaining upfront payment balance after the conclusion of the auction. No refund will be made unless there are excess funds on deposit from that applicant after any applicable bid withdrawal payments have been paid.

130. Bidders that drop out of the auction completely may be eligible for a refund of their upfront payments before the close of the auction. However, bidders that reduce their eligibility and remain in the auction are not eligible for partial refunds of upfront payments until the close of the auction. Qualified bidders that have exhausted all of their activity rule waivers, have no remaining bidding eligibility, and have not withdrawn a high bid during the auction must submit a refund request which includes wire transfer instructions and a Taxpayer Identification Number (''TIN''), to: Federal Communications Commission, Financial Operations Center, Auctions Accounting Group, Shirley Hanberry, 445 12th Street, S.W., Room 1–A824 Washington, DC 20554.

131. Bidders are encouraged to file their refund information electronically using the Refund Information portion of the FCC Form 175, but bidders can also fax their request to the Auctions Accounting Group at (202) 418–2843. Once the request has been approved, a refund will be sent to the party identified in the refund information.

**Note:** Refund processing generally takes up to two weeks to complete. Bidders with questions about refunds should contact Michelle Bennett or Gail Glasser at (202) 418–1995.

Federal Communications Commission.

**Louis J. Sigalos,**

*Deputy Chief, Auctions and Industry Analysis Division.*

[FR Doc. 00–9905 Filed 4–19–00; 8:45 am]

BILLING CODE 6712–01–P

---

## FEDERAL COMMUNICATIONS COMMISSION

**[Report No. AUC–00–31–E (Auction No. 31); DA 00–785]**

## 747–762 and 777–792 MHz Band Auction Filing Dates and Changes to Attachment J

**AGENCY:** Federal Communications Commission.

**ACTION:** Notice.

**SUMMARY:** This document announces new dates relevant to the upcoming auction of licenses in the 747–762 and 77–792 MHz bands (Auction No. 31) scheduled to begin June 7, 2000.

**DATES:** Auction No. 31 will begin June 7, 2000.

**FOR FURTHER INFORMATION CONTACT:** Howard Davenport, Auctions and Industry Analysis Division, at (202) 418–0660 or Kathy Garland, Auctions Operations at (717) 338–2801.

**SUPPLEMENTARY INFORMATION:** This is a summary of a Public Notice released April 12, 2000. The complete text of the public notice, including corrected Attachment J (Incumbent Television Licenses on Channels 59–68) is available for inspection and copying during normal business hours in the FCC Reference Center (Room CY–A257), 445 12th Street, SW, Washington, DC 20554. It may also be purchased from the Commission's copy contractor, International Transcription Services, Inc. (ITS, Inc.), 1231 20th Street, NW, Washington, DC 20036, (202) 857–3800. It is also available on the Commission's web site at *http://www.fcc.gov.*

1. The upcoming auction of licenses in the 747–762 and 777–792 MHz bands has been postponed until June 7, 2000. *See* DA 00–573, 747–762 and 777–792 MHz Band Auction Postponed Until June 7, 2000 (*Postponement Public Notice*) 65 FR 16202 (March 27, 2000). In the light of the postponement, the Wireless Telecommunications Bureau (''Bureau'') announces changes to related dates. The new dates and the dates already announced are as follows:

Deadline for Seminar Registration ..... April 21, 2000; 5:30 p.m. ET.

| | |
|---|---|
| Start Date for Submission of FCC Form 175 | April 24, 2000. |
| Seminar Date | April 24, 2000. |
| Filing Deadline for FCC Form 175 | May 8, 2000; 6:00 p.m. ET. |
| Upfront Payments | May 22, 2000; 6:00 p.m. ET. |
| Deadline for Submitting (via fax) Refund Wire Transfer Instructions | May 22, 2000; 6:00 p.m. ET. |
| Deadline for Ordering Remote Bidding Software | May 23, 2000; 6:00 p.m. ET. |
| Mock Auction Begins | June 2, 2000. |
| Auction Begins | June 7, 2000. |

2. The Bureau also makes a minor correction to Attachment J of an earlier public notice. *See* DA 00–292, Auction of Licenses in the 747–762 and 777–792 MHz Bands Scheduled for May 10, 2000 (*Announcing Public Notice*) 65 FR 12251 (March 8, 2000). Attachment J has been amended to add the digital television stations that must also be protected from interference during the transitional period. This minor change reinforces and highlights the requirement that new licensees in the 747–762 and 777–792 MHz bands must provide full protection to both analog television and digital television operations during the transitional period. *See* FCC 00–5, Service Rules for the 746–764 and 776–794 MHz Bands, and Revisions to Part 27 of the Commission's Rules (*First Report and Order*) 65 FR 3139 (January 20, 2000).

3. The Commission delegated to the Bureau the authority to suspend payment deadlines and require that winning bidders on *all* licenses in the 700 MHz bands pay the full balance of their winning bids upon submission of their long-form application. *See* FCC 00–90, Service Rules for the 746–764 and 776–794 MHz Bands, and Revisions to Part 27 of the Commission's Rules (*Second Report and Order*) 65 FR 17594 (April 4, 2000). The Bureau will announce in a *Public Notice* if it chooses to exercise this authority.

4. Finally, in light of upcoming auctions, the Bureau also reminds participants that under the anti-collusion rules, after the short-form filing deadline, applicants may not discuss the substance of their bids or bidding strategies with other bidders that have applied to bid in the same geographic license areas, with the exception of those with whom they have entered into agreements and identified on the short-form application. *See* DA 96–1460, Wireless Telecommunications Bureau Provides Guidance on the Anti-Collusion Rule for D, E and F Block Bidders, (*Public Notice*), (released August 28, 1996). 11 FCC Rcd. 10134.

Federal Communications Commission.

**Louis J. Sigalos,**

*Deputy Chief, Auctions and Industry Analysis Division.*

[FR Doc. 00–9904 Filed 4–19–00; 8:45 am]

BILLING CODE 6712–01–U

## FEDERAL DEPOSIT INSURANCE CORPORATION

### Sunshine Act Meeting

Pursuant to the provisions of the ''Government in the Sunshine Act'' (5 U.S.C. 552b), notice is hereby given that at 10:00 a.m. on Tuesday, April 18, 2000, the Federal Deposit Insurance Corporation's Board of Directors will meet in closed session, pursuant to sections 552b(c)(2), (c)(6), (c)(8), (c)(9)(A)(ii), (c)(9)(B), and (c)(10), of Title 5, United States Code, to consider matters relating to the Corporation's supervisory, corporate, and personnel activities.

The meeting will be held in the Board Room on the sixth floor of the FDIC Building located at 550—17th Street, NW, Washington, DC.

Requests for further information concerning the meeting may be directed to Mr. Robert E. Feldman, Executive Secretary of the Corporation, at (202) 898–6757.

Dated: April 14, 2000.

Federal Deposit Insurance Corporation.

**Robert E. Feldman,**

*Executive Secretary.*

[FR Doc. 00–9984 Filed 4–18–00; 12:42 pm]

BILLING CODE 6714–01–M

## FEDERAL ELECTION COMMISSION

### Sunshine Act Meeting

**AGENCY:** Federal Election Commission.

*Previously announced date and time: Thursday, April 13, 2000; 10 a.m., meeting open to the public.*

The following items were added to the agenda:

Final Audit Report on Michigan Republican State Committee (MRSC)

Financial Control and Compliance Manual for Presidential Primary Candidates Receiving Public Financing—Proposed 2000 Edition

The following item was withdrawn from the agenda:

Revisions to Instructions for Forms 3 and 3X

**DATE & TIME:** *Wednesday, April 26, 2000 at 10 a.m.*

**PLACE:** 999 E Street, NW, Washington, DC.

**STATUS:** This meeting will be closed to the public.

**ITEMS TO BE DISCUSSED:** Compliance matters pursuant to 2 U.S.C. § 437g

Audits conducted pursuant to 2 U.S.C. § 437g, § 438(b), and Title 26, U.S.C.

Matters concerning participation in civil actions or proceedings or arbitration

Internal personnel rules and procedures or matters affecting a particular employee

**DATE & TIME:** *Thursday, April 27, 2000 at 10 a.m.*

**PLACE:** 999 E Street, NW, Washington, DC (Ninth Floor).

**STATUS:** This meeting will be open to the public.

**ITEMS TO BE DISCUSSED:** Correction and Approval of Minutes

Draft Advisory Opinion 2000–05: The Oneida Nation of New York by counsel, Markham C. Erickson

Notice of Proposed Rulemaking: Election Cycle Reporting

Administrative Matters

**PERSON TO CONTACT FOR INFORMATION:** Mr. Ron Harris, Press Officer, Telephone: (202) 694–1220.

**Mary W. Dove,**

*Acting Secretary of the Commission.*

[FR Doc. 00–10023 Filed 4–18–00; 3:18 pm]

BILLING CODE 6715–01–M

## FEDERAL RESERVE SYSTEM

### Change in Bank Control Notices; Acquisitions of Shares of Banks or Bank Holding Companies

The notificants listed below have applied under the Change in Bank Control Act (12 U.S.C. 1817(j)) and § 225.41 of the Board's Regulation Y (12 CFR 225.41) to acquire a bank or bank

holding company. The factors that are considered in acting on the notices are set forth in paragraph 7 of the Act (12 U.S.C. 1817(j)(7)).

The notices are available for immediate inspection at the Federal Reserve Bank indicated. The notices also will be available for inspection at the offices of the Board of Governors. Interested persons may express their views in writing to the Reserve Bank indicated for that notice or to the offices of the Board of Governors. Comments must be received not later than May 4, 2000.

A. Federal Reserve Bank of Minneapolis (JoAnne F. Lewellen, Assistant Vice President), 90 Hennepin Avenue, Minneapolis, Minnesota 55480–0291:

1. The Emison Investments Limited Partnership, Eden Prairie, Minnesota; to acquire voting shares of Community Bank Group, Inc., Eden Prairie, Minnesota; and thereby indirectly acquire voting shares of Community Bank Winsted, Winsted, Minnesota, and Community Bank Minnesota Valley, Jordan, Minnesota.

B. Federal Reserve Bank of Kansas City (D. Michael Manies, Assistant Vice President), 925 Grand Avenue, Kansas City, Missouri 64198–0001:

1. Randy Allan Deason, Chouteau, Oklahoma; to acquire voting shares of BOC Banshares, Inc., Chouteau, Oklahoma, and thereby indirectly acquire voting shares of Bank of Commerce, Chouteau, Oklahoma.

C. Federal Reserve Bank of Dallas (W. Arthur Tribble, Vice President), 2200 North Pearl Street, Dallas, Texas 75201–2272:

1. Robert B. Mathieu, Delhi, Louisiana; to acquire additional voting shares of Delhi Bancshares, Inc., Delhi, Louisiana, and thereby indirectly acquire additional voting shares of Guaranty Bank & Trust Company of Delhi, Delhi, Louisiana.

Board of Governors of the Federal Reserve System, April 14, 2000.

**Jennifer J. Johnson,**

*Secretary of the Board.*

[FR Doc. 00–9884 Filed 4–19–00; 8:45 am]

**BILLING CODE 6210–01–P**

---

## FEDERAL RESERVE SYSTEM

### Formations of, Acquisitions by, and Mergers of Bank Holding Companies; Correction

This notice corrects a notice (FR Doc. 00–9055) published on page 19766 of the issue for Wednesday, April 12, 2000.

Under the Federal Reserve Bank of New York heading, the entry for The Dai-Ichi Kangyo Fuji Trust & Banking Co., Ltd., Tokyo, Japan, is revised to read as follows:

A. Federal Reserve Bank of New York (Betsy Buttrill White, Senior Vice President), 33 Liberty Street, New York, New York 10045–0001:

1. The Dai-Ichi Kangyo Fuji Trust & Banking Co., Ltd., Tokyo, Japan; to become a bank holding company through the ownership of 100 percent of, and by the conversion of its U.S. subsidiary, DKF Trust Company (USA), New York, New York, an insured New York state-chartered trust company, into a bank, as defined by the BHC Act.

Comments on this application must be received by May 5, 2000.

Board of Governors of the Federal Reserve System, April 14, 2000.

**Jennifer J. Johnson,**

*Secretary of the Board.*

[FR Doc. 00–9883 Filed 4–19–00; 8:45 am]

**BILLING CODE 6210–01–P**

---

## FEDERAL RESERVE SYSTEM

### Formations of, Acquisitions by, and Mergers of Bank Holding Companies

The companies listed in this notice have applied to the Board for approval, pursuant to the Bank Holding Company Act of 1956 (12 U.S.C. 1841 *et seq.*) (BHC Act), Regulation Y (12 CFR Part 225), and all other applicable statutes and regulations to become a bank holding company and/or to acquire the assets or the ownership of, control of, or the power to vote shares of a bank or bank holding company and all of the banks and nonbanking companies owned by the bank holding company, including the companies listed below.

The applications listed below, as well as other related filings required by the Board, are available for immediate inspection at the Federal Reserve Bank indicated. The application also will be available for inspection at the offices of the Board of Governors. Interested persons may express their views in writing on the standards enumerated in the BHC Act (12 U.S.C. 1842(c)). If the proposal also involves the acquisition of a nonbanking company, the review also includes whether the acquisition of the nonbanking company complies with the standards in section 4 of the BHC Act (12 U.S.C. 1843). Unless otherwise noted, nonbanking activities will be conducted throughout the United States. Additional information on all bank holding companies may be obtained from the National Information Center website at www.ffiec.gov/nic/.

Unless otherwise noted, comments regarding each of these applications must be received at the Reserve Bank indicated or the offices of the Board of Governors not later than May 15, 2000.

A. Federal Reserve Bank of New York (Betsy Buttrill White, Senior Vice President), 33 Liberty Street, New York, New York 10045–0001:

1. Troy Financial Corporation, Troy, New York; to acquire 100 percent of the voting shares of The Troy Commercial Bank, Troy, New York.

B. Federal Reserve Bank of Richmond (A. Linwood Gill, III, Vice President), 701 East Byrd Street, Richmond, Virginia 23261–4528:

1. Carolina First Corporation, Greenville, South Carolina; to merge with Anchor Financial Corporation, Myrtle Beach, South Carolina, and thereby indirectly acquire The Anchor Bank, Myrtle Beach, South Carolina; and shares of RHBT Financial Corporation, Rock Hill, South Carolina; and Rock Hill Bank & Trust, Rock Hill, South Carolina.

2. First Bancorp, Troy, North Carolina; to merge with First Savings Bancorp, Inc., Southern Pines, North Carolina, and thereby indirectly acquire First Savings Bank of Moore County, Inc., SSB, Southern Pines, North Carolina.

C. Federal Reserve Bank of Chicago (Phillip Jackson, Applications Officer), 230 South LaSalle Street, Chicago, Illinois 60690–1414:

1. Firstbank Corporation, Alma, Michigan; to acquire 100 percent of the voting shares of Firstbank-St. Johns (in organization), St. Johns, Michigan.

D. Federal Reserve Bank of St. Louis (Randall C. Sumner, Vice President), 411 Locust Street, St. Louis, Missouri 63166–2034:

1. G.A.C., Inc., St. Louis, Missouri; to become a bank holding company by acquiring 100 percent of the voting shares of Gateway National Bank of St. Louis, St. Louis, Missouri.

E. Federal Reserve Bank of Kansas City (D. Michael Manies, Assistant Vice President), 925 Grand Avenue, Kansas City, Missouri 64198–0001:

1. First Liberty Capital Corporation ESOP, Hugo, Colorado; to become a bank holding company by acquiring 25 percent of the voting shares of First Liberty Capital Corporation, Hugo, Colorado, and thereby indirectly acquire First National Bank of Hugo, Hugo, Colorado.

F. Federal Reserve Bank of San Francisco (Maria Villanueva, Consumer Regulation Group), 101 Market Street, San Francisco, California 94105–1579:

1. Frontier Financial Corporation, Everett, Washington; to acquire up to 100 percent of the voting shares of Liberty Bay Financial Corporation,

Poulsbo, Washington, and thereby indirectly acquire North Sound Bank, Poulsbo, Washington.

Board of Governors of the Federal Reserve System, April 14, 2000.

**Jennifer J. Johnson,**

*Secretary of the Board.*

[FR Doc. 00–9885 Filed 4–19–00; 8:45 am]

BILLING CODE 6210–01–P

## DEPARTMENT OF HEALTH AND HUMAN SERVICES

### Centers for Disease Control And Prevention

**[60 Day–00–33]**

### Proposed Data Collections Submitted for Public Comment and Recommendations

In compliance with the requirement of Section 3506 (c) (2) (A) of the Paperwork Reduction Act of 1995, the Centers for Disease Control and Prevention (CDC) is providing an opportunity for public comment on proposed data collection projects. To request more information on the proposed projects or to obtain a copy of the data collection plans and instruments, call the CDC/ATSDR Reports Clearance Officer at (404) 639–7090.

Comments are invited on: (a) Whether the proposed collection of information is necessary for the proper performance of the functions of the agency, including whether the information shall have practical utility; (b) the accuracy of the agency's estimate of the burden of the proposed collection of information; (c) ways to enhance the quality, utility, and clarity of the information to be collected; and (d) ways to minimize the burden of the collection of information on respondents, including through the use of automated collection techniques for other forms of information technology. Send comments to CDC/ATSDR Reports Clearance Officer, 1600 Clifton Road, MS–D24, Atlanta, GA 30333. Written comments should be received within 60 days of this notice.

**1. Proposed Projects**

National Survey of Laboratory Practices for Selected Coagulation Tests in Hospital Laboratories—New—As part of the continuing effort to support public health objectives of treatment, disease prevention and surveillance programs, the Public Health Practice Program Office (PHPPO), Division of Laboratory Systems seeks to collect information on coagulation testing practices among U.S. hospital laboratories. The purpose of this project is to define the state of testing practices in a random sample of up to 800 U.S. hospital laboratories for selected coagulation analytes by conducting a questionnaire survey of these laboratories. The objectives of this survey are to collect data to assess the variability of selected analytical and non-analytical variables, such as normal ranges, used for selected coagulation tests. There has not been a systematic and nationally based survey of coagulation testing practices among U.S. hospital laboratories. Such a surveillance is needed due to the impact that coagulation testing practices can have on the diagnosis and management of coagulation disorders.

There is ample evidence of variability in coagulation testing practices based on published literature corresponding to experiences of individual institutions that deal with analytical (e.g., impact of instrument and kit reagents on laboratory results) as well as pre-analytical (such as specimen treatment) and post-analytical (such as results presentation) issues. However, there has not been a systematic survey of national hospital laboratories that has documented the nature and extent of such variability for selected coagulation tests. Preliminary observations document substantial inter-institutional variability in coagulation testing practices, with likely effect on patient outcome.

This study will explore current practices for one or more selected coagulation tests to document the extent and nature of variability in the testing processes. It is anticipated that information from this study will be used for several purposes. First, results from this project may be used in a future study in order to surmise the potential impact of various testing practices on patient outcomes. A second anticipated use of this study's results is to implement targeted laboratory improvement efforts. Finally, this study may form the basis for a future study to assess the extent and nature of problems in diagnosis and treatment of patients caused by inaccurate laboratory results. Because hypo- and hypercoagulability disorders are prevalent in the U.S. and they are defined to a great extent by laboratory tests, a well designed laboratory practice survey is expected to be of great public health significance for the nation.

We plan to sample up to 800 laboratories that perform selected coagulation tests. The time required to complete a survey will be approximately 0.5 hours. We anticipate that, of the respondents, approximately 80 will be Coagulation Laboratory Directors (physicians) and approximately 720 will be Coagulation Laboratory Supervisors. The total burden hours to complete the survey is estimated to be 400. Based on hourly wage estimates, the cost to respondents could be approximately $9,000. Because we expect the Laboratory Directors and Supervisors to complete the survey during their usual working hours. We anticipate that there will be no actual cost to the respondents.

ESTIMATES OF ANNUALIZED BURDEN HOURS

| Type of respondents | Number of respondents | Frequency of response | Average time per response | Annual hour burden |
|---|---|---|---|---|
| Laboratory Director | 80 | 1 | 30/60 | 40 |
| Laboratory Supervisor | 720 | 1 | 30/60 | 360 |
| Totals | 800 | ..... | ..... | 400 |

Dated: April 13, 2000.

**Nancy Cheal,**

*Acting Associate Director for Policy, Planning, and Evaluation, Centers for Disease Control and Prevention (CDC).*

[FR Doc. 00–9886 Filed 4–19–00; 8:45 am]

BILLING CODE 4163–18–P

## DEPARTMENT OF HEALTH AND HUMAN SERVICES

### Food and Drug Administration

**[Docket No. 79N–0113; DESI 2847]**

### Parenteral Multivitamin Products; Drugs for Human Use; Drug Efficacy Study Implementation; Amendment

**AGENCY:** Food and Drug Administration, HHS.

**ACTION:** Notice.

**SUMMARY:** The Food and Drug Administration (FDA) is amending the conditions for marketing an effective adult parenteral multivitamin drug product that published in the **Federal Register** of September 17, 1984 (49 FR 36446). The agency is notifying manufacturers of modifications in the adult formulation and certain portions of the labeling for the products.

**DATES:** Supplements to approved new drug applications (NDA's) and abbreviated new drug applications (ANDA's) are due on or before June 19, 2000.

**ADDRESSES:** Communication in response to this notice should be identified with the reference number DESI 2847 and directed to the attention of the appropriate office named below.

Supplements to full NDA's (identify with NDA number): Division of Metabolic and Endocrine Drug Products (HFD–510), Center for Drug Evaluation and Research, Food and Drug Administration, 5600 Fishers Lane, Rockville, MD 20857.

Original ANDA's: Office of Generic Drugs (HFD–600), Center for Drug Evaluation and Research, Food and Drug Administration, 7500 Standish Pl., Rockville, MD 20855.

Requests for opinion of the applicability of this notice to a specific product: Division of Prescription Drug Compliance and Surveillance (HFD–330), Food and Drug Administration, 7500 Standish Pl., Rockville, MD 20855.

**FOR FURTHER INFORMATION CONTACT:** Mary E. Catchings, Center for Drug Evaluation and Research (HFD–7), Food and Drug Administration, 5600 Fishers Lane, Rockville, MD 20857, 301–594–2041.

**SUPPLEMENTARY INFORMATION:** In a notice published in the **Federal Register** of September 17, 1984 (49 FR 36446), FDA announced the conditions for marketing an effective parenteral multivitamin preparation. The effective 12-vitamin formulation set forth in the notice was based on the clinical evaluation of a guideline formulation recommended in 1975 by the American Medical Association (AMA). The notice also stated that, because parenteral multivitamin products are used and evaluated in patients with a variety of disease conditions, future adjustments to the formulation may be necessary.

On August 21, 1985, FDA's Division of Metabolic and Endocrine Drug Products and the AMA's Division of Personal and Public Health Policy sponsored a public workshop on ''Multivitamin Preparations for Parenteral Use.'' At the workshop, additional data from clinical testing of the 1975 AMA formulation and a variety of other data were presented and discussed in light of available information on parenteral vitamin therapy. After examining the data, the AMA–FDA workshop committee recommended that the dosage of vitamins $B_1$, $B_6$, C, and folic acid be increased and that vitamin K be added to the formulation. Based on a review of the committee's recommendations, the Director of the Center for Drug Evaluation and Research has concluded that the 1975 AMA formulation for parenteral multivitamins should be modified to reflect the advice of the committee.

Accordingly, this notice amends portions of the section *Conditions for Approval and Marketing* in the September 17, 1984, notice as follows (in accordance with current labeling practice, amounts previously listed in international units (IU) have been converted to weights):

Paragraph 1(a)(i) is revised as follows:

1. *Adult formulation (intended for ages 11 and older*)

| Ingredient | Amount per Unit Dose |
|---|---|
| *Fat Soluble Vitamins* | |
| A (retinol) | 1 milligram (mg) |
| D (ergocalciferol or cholecalciferol) | 5 micrograms (µg) |
| E (alpha-tocopherol) | 10 mg |
| K (phylloquinone) | 150 µg |
| Water-Soluble Vitamins | |
| C (ascorbic acid) | 200 mg |
| Folic acid | 600 µg |
| Niacin | 40 mg |
| $B_2$ (riboflavin) | 3.6 mg |
| $B_1$ (thiamine) | 6.0 mg |
| $B_6$ (pyridoxine) | 6.0 mg |
| $B_{12}$ (cyanocobalamin) | 5 µg |
| Pantothenic acid | 15.0 mg |
| Biotin | 60 µg |

2. *Labeling conditions.*

(a) The label must bear the statement ''Rx only.''

(b) *Indication.* Paragraph 2(b)(i)(a) is revised as follows (This language may be editorially adapted to a specific product's labeling, as appropriate.):

*Adult.* This formulation is indicated as a daily multivitamin maintenance dosage for adults and for children age 11 and above receiving parenteral

nutrition. It is also indicated in other situations where intravenous administration is required. Such situations include surgery, extensive burns, fractures and other trauma, severe infectious diseases, and comatose states, which may provoke a stress situation with profound alterations in the body's metabolic demands and consequent tissue depletion of nutrients. This product (administered in intravenous fluids under proper dilution) contributes intake of these vitamins that are necessary toward maintaining the body's normal resistance and repair processes.

The physician should not await the development of clinical signs of vitamin deficiency before initiating vitamin therapy.

Patients with multiple vitamin deficiencies or with markedly increased requirements may be given multiples of the daily dosage for 2 or more days, as indicated by the clinical status. Clinical testing indicates that some patients do not maintain adequate levels of certain vitamins when this formulation in recommended amounts is the sole source of vitamins.

(c) *Contraindications:*

Known hypersensitivity to any of the vitamins or excipients in this product or a preexisting hypervitaminosis. Allergic reaction has been known to occur following intravenous administration of thiamine and vitamin K. The formulation is contraindicated prior to blood sampling for detection of megaloblastic anemia, as the folic acid and the cyanocobalamin in the vitamin solution can mask serum deficits.

In addition, the following sections required by 21 CFR 201.57 should read as follows:

1. *Precautions:* (The following paragraph should be added and should appear in bold type.)

Caution should be exercised when administering this multivitamin formulation to patients on warfarin sodium-type anticoagulant therapy. In such patients, periodic monitoring of prothrombin time is essential in determining the appropriate dosage of anticoagulant therapy.

2. *Drug Reactions:* This section is revised to read ''Drug Interactions'' and to add aminophylline 125 mg and ampicillin 500 mg to this list.

Supplements to approved NDA's or ANDA's providing for appropriate revision of the labeling of drug products affected by this notice should be submitted on or before June 19, 2000.

This notice is issued under the Federal Food, Drug, and Cosmetic Act (secs. 201(n), 502, 505, 52 Stat. 1041, 1050–1053, as amended (21 U.S.C. 321(n), 352, 355)) and under the authority delegated to the Director of the Center for Drug Evaluation and Research (21 CFR 5.70).

Dated: March 28, 2000.

**Janet Woodcock,**

*Director, Center for Drug Evaluation and Research.*

[FR Doc. 00–9848 Filed 4–19–00; 8:45 am]

BILLING CODE 4160–01–F

---

## DEPARTMENT OF HEALTH AND HUMAN SERVICES

### Food and Drug Administration

### General and Plastic Surgery Devices Panel of the Medical Devices Advisory Committee; Notice of Meeting

**AGENCY:** Food and Drug Administration, HHS.

**ACTION:** Notice.

This notice announces a forthcoming meeting of a public advisory committee of the Food and Drug Administration (FDA). The meeting will be open to the public.

*Name of Committee:* General and Plastic Surgery Devices Panel of the Medical Devices Advisory Committee.

*General Function of the Committee:* To provide advice and recommendations to the agency on FDA's regulatory issues.

*Date and Time:* The meeting will be held on May 8, 2000, 8 a.m. to 5 p.m.

*Location:* Marriott Washingtonian Center, Salons F and G, 9751 Washingtonian Blvd., Gaithersburg, MD.

*Contact Person:* David Krause, Center for Devices and Radiological Health (HFZ–410), Food and Drug Administration, 9200 Corporate Blvd., Rockville, MD 20850, 301–594–3090, ext. 141, or FDA Advisory Committee Information Line, 1–800–741–8138 (301–443–0572 in the Washington, DC area), code 12519. Please call the Information Line or access the Internet at http://www.fda.gov/cdrh/panelmtg.html for up-to-date information on this meeting.

*Agenda:* The committee will discuss, make recommendations, and vote on two premarket approval applications for: (1) An in situ polymerizable surgical mesh intended to be used to seal air leaks following thoracic cavity surgery; and (2) an interactive wound and burn dressing intended to be used for the treatment of diabetic foot ulcers.

*Procedure:* Interested persons may present data, information, or views, orally or in writing, on issues pending before the committee. Written submissions may be made to the contact person by May 1, 2000. Oral presentations from the public will be scheduled between approximately 8:15 a.m. and 8:45 a.m., 11:15 a.m. and 11:45 a.m., 1:15 p.m. and 1:45 p.m., and 4 p.m. and 4:30 p.m. Time allotted for each presentation may be limited. Those desiring to make formal oral presentations should notify the contact person before May 1, 2000, and submit a brief statement of the general nature of the evidence or arguments they wish to present, the names and addresses of proposed participants, and an indication of the approximate time requested to make their presentation.

FDA regrets that it was unable to publish this notice 15 days prior to the General and Plastic Surgery Devices Panel of the Medical Devices Advisory Committee meeting. Because the agency believes there is some urgency to bring these issues to public discussion and qualified members of the General and Plastic Surgery Devices Panel of the Medical Devices Advisory Committee were available at this time, the Commissioner of Food and Drugs concluded that it was in the public interest to hold this meeting even if there was not sufficient time for the customary 15-day public notice.

Notice of this meeting is given under the Federal Advisory Committee Act (5 U.S.C. app. 2).

Dated: April 14, 2000.

**Linda A. Suydam,**

*Senior Associate Commissioner.*

[FR Doc. 00–9908 Filed 4–19–00; 8:45 am]

BILLING CODE 4160–01–F

---

## DEPARTMENT OF HEALTH AND HUMAN SERVICES

### Food and Drug Administration

### Neurological Devices Panel of the Medical Devices Advisory Committee; Notice of Meeting

**AGENCY:** Food and Drug Administration, HHS.

**ACTION:** Notice.

This notice announces a forthcoming meeting of a public advisory committee of the Food and Drug Administration (FDA). The meeting will be open to the public.

*Name of Committee:* Neurological Devices Panel of the Medical Devices Advisory Committee.

*General Function of the Committee:* To provide advice and recommendations to the agency on FDA's regulatory issues.

*Date and Time:* The meeting will be held on May 11, 2000, 8:30 a.m. to 5 p.m.

*Location:* Corporate Bldg., conference room 020B, 9200 Corporate Blvd., Rockville, MD.

*Contact Person:* Janet L. Scudiero, Center for Devices and Radiological Health (HFZ–410), Food and Drug Administration, 9200 Corporate Blvd., Rockville, MD 20850, 301–594–1184, ext. 176, or FDA Advisory Committee Information Line, 1–800–741–8138 (301–443–0572 in the Washington, DC area), code 12513. Please call the Information Line or access the Internet address at http://www.fda.gov/cdrh/upadvmtg.html for up-to-date information on this meeting.

*Agenda:* The committee will discuss, make recommendations and vote on a premarket approval application for an embolization device.

*Procedure:* Interested persons may present data, information, or views, orally or in writing, on issues pending before the committee. Written submissions may be made to the contact person by April 24, 2000. Oral presentations from the public will be scheduled between approximately 9 a.m. and 9:30 a.m., and 3 p.m. and 3:30 p.m. Time allotted for each presentation may be limited. Those desiring to make formal oral presentations should notify the contact person before April 24, 2000, and submit a brief statement of the general nature of the evidence or arguments they wish to present, the names and addresses of proposed participants, and an indication of the approximate time requested to make their presentation.

Notice of this meeting is given under the Federal Advisory Committee Act (5 U.S.C. app. 2).

Dated: April 14, 2000.

**Linda A. Suydam,**

*Senior Associate Commissioner.*

[FR Doc. 00–9909 Filed 4–19–00; 8:45 am]

BILLING CODE 4160–01–F

---

## DEPARTMENT OF HEALTH AND HUMAN SERVICES

### Substance Abuse and Mental Health Services Administration

### Agency Information Collection Activities: Submission for OMB Review; Comment Request

Periodically, the Substance Abuse and Mental Health Services Administration (SAMHSA) will publish a list of information collection requests under OMB review, in compliance with the Paperwork Reduction Act (44 U.S.C. Chapter 35). To request a copy of these documents, call the SAMHSA Reports Clearance Officer on (301) 443–7978.

**State Prevention Needs Assessments: Alcohol and Other Drugs, Cohort V**

(New)—SAMHSA's Center for Substance Abuse Prevention (CSAP) has awarded contracts to three States (Cohort V) to collect data to assess the nature and extent of substance abuse prevention services needs. The data collection by these States will bring to 30 (Cohorts I–V) the number of States that have implemented a family of prevention needs assessment studies, and will constitute the third cohort to apply the core set of measures, instruments, and methodologies developed and standardized under prior State needs assessment State contracts.

Data will be collected in school surveys and community resource assessments (CRA). The information collected in this project will be combined with existing information from other sources; States may use multiple approaches to assess statewide and substate distributions of risk and protective factors for substance use, of prevention resources, and of prevention services needs. These needs assessment studies will permit cross-State comparison of risk and protection variables to assist State services planning and allocation of State Block Grant funds, and to assist Federal response to the Government Performance and Results Act (GPRA). The estimated annualized burden for the three-year project is shown below.

| State/study | Estimates of number of respondents (3 year totals) | Number of responses per respondent (3 year totals) | Average burden per response (hours) | Total response burden (hours) |
|---|---|---|---|---|
| Alabama: | | | | |
| Student Survey | 6,500 | 1 | 0.75 | 4,875 |
| School Survey Admin. (Contact) | 60 | 1 | 0.50 | 30 |
| School Survey Admin. (Teacher) | 241 | 1 | 0.70 | 169 |
| CRA | 355 | 1 | 1.00 | 355 |
| Michigan: | | | | |
| Student Survey | 12,000 | 1 | 0.75 | 9,000 |
| Student Survey Admin. (Contact) | 146 | 1 | 0.50 | 73 |
| Student Survey Admin. (Teacher) | 438 | 1 | 0.70 | 307 |
| CRA | 310 | 1 | 1.00 | 310 |
| Tennessee: | | | | |
| Student Survey | 100,000 | 1 | 0.75 | 75,000 |
| Student Survey Admin. (Contact) | 250 | 1 | 0.50 | 125 |
| Student Survey Admin. (Teacher) | 3,333 | 1 | 0.70 | 2,333 |
| CRA | 1,100 | 1 | 1.00 | 1,100 |
| Totals | 124,733 | ..... | ..... | 93,677 |
| 3-year average | 41,578 | ..... | ..... | 31,226 |

Written comments and recommendations concerning the proposed information collection should be sent within 30 days of this notice to: Clarissa Rodrigues-Coelho, Human Resources and Housing Branch, Office of Management and Budget, New Executive Office Building, Room 10235, Washington, D.C. 20503.

Dated: April 12, 2000.

**Richard Kopanda,**

*Executive Officer, SAMHSA.*

[FR Doc. 00–9887 Filed 4–19–00; 8:45 am]

BILLING CODE 4162–20–P

## DEPARTMENT OF HOUSING AND URBAN DEVELOPMENT

**[Docket No. FR–4561–N–30]**

### Notice of Submission of Proposed Information Collection to OMB; Multifamily Housing Service Coordinator Program

**AGENCY:** Office of the Chief Information Officer, HUD.

**ACTION:** Notice.

**SUMMARY:** The proposed information collection requirement described below has been submitted to the Office of Management and Budget (OMB) for review, as required by the Paperwork Reduction Act. The Department is soliciting public comments on the subject proposal.

**DATES:** *Comments Due Date:* May 22, 2000.

**ADDRESSES:** Interested persons are invited to submit comments regarding this proposal. Comments should refer to the proposal by name and/or OMB approval number (2502–0447) and should be sent to: Joseph F. Lackey, Jr., OMB Desk Officer, Office of Management and Budget, Room 10235, New Executive Office Building, Washington, DC 20503.

**FOR FURTHER INFORMATION CONTACT:** Wayne Eddins, Reports Management Officer, Q, Department of Housing and Urban Development, 451 Seventh Street, Southwest, Washington, DC 20410; e-mail Wayne__Eddins@HUD.gov; telephone (202) 708–2374. This is not a toll-free number. Copies of the proposed forms and other available documents submitted to OMB may be obtained from Mr. Eddins.

**SUPPLEMENTARY INFORMATION:** The Department has submitted the proposal for the collection of information, as described below, to OMB for review, as required by the Paperwork Reduction Act (44 U.S.C. Chapter 35). The Notice lists the following information (1) The title of the information collection proposal; (2) the office of the agency to collect the information; (3) the OMB approval number, if applicable; (4) the description of the need for the information and its proposed use; (5) the agency form number, if applicable; (6) what members of the public will be affected by the proposal; (7) how frequently information submissions will be required; (8) an estimate of the total number of hours needed to prepare the information submission, including number of respondents, frequency of response, and hours of response; (9) whether the proposal is new, an extension, reinstatement, or revision of an information collection requirement; and (10) the name and telephone number of an agency official familiar with the proposal and of the OMB Desk Officer for the Department.

This Notice also lists the following information:

*Title of Proposal:* Multifamily Housing Service Coordinator Program.

*OMB Approval Number:* 2502–0447.

*Form Numbers:* HUD–92456, HUD–50080–SCMF, SF–269, SF–424, SF–424–B, HUD–2880, SF–LLL.

*Description of the Need for the Information and Its Proposed Use:* This package revises and reinstates information collection and reporting requirements for the Service Coordinator Program. It adds three new financial and performance reports, as well as a new grant application package.

*Respondents:* Business or other Not-for-profit, Not-for-profit institutions.

*Frequency of Submission:* Quarterly Semi-annually.

*Reporting Burden:*

| | Number of respondents | x | Frequency of response | x | Hours per response | = | Burden hours |
|---|---|---|---|---|---|---|---|
| Reporting | 4,060 | | 9 | | .85 | | 47,400 |

*Total Estimated Burden Hours:* 47,400.

*Status:* Reinstate with change.

**Authority:** Section 3507 of the Paperwork Reduction Act of 1995, 44 U.S.C. 35, as amended.

Dated: April 14, 2000.

**Wayne Eddins,**

*Departmental Reports Management Officer, Office of the Chief Information Officer.*

[FR Doc. 00–9930 Filed 4–19–00; 8:45 am]

BILLING CODE 4210–01–M

## DEPARTMENT OF THE INTERIOR

### Fish and Wildlife Service

### Endangered and Threatened Species Permit Application

**AGENCY:** Fish and Wildlife Service, Interior.

**ACTION:** Notice of receipt of permit application and availability of Habitat Conservation Plan and Environmental Assessment.

**SUMMARY:** This notice advises the public that Magic Carpet Woods Association (Applicant) has applied to the Fish and Wildlife Service (Service) for an incidental take permit pursuant to section 10(a)(1)(B) of the Endangered Species Act of 1973, as amended (Act). This notice is provided pursuant to section 10(c) of the Endangered Species Act of 1973, as amended (16 U.S.C. 1531, *et seq.*). The application has been assigned permit number TE 025433. The applicant requests a permit to authorize the incidental take associated with harassment (*i.e.,* harm) of the piping plover (*Charadrius melodus*) which is federally listed as endangered. The permit is requested for a period of 25 years. The take would occur as a result of residential construction adjacent to Lake Michigan in Leelanau Township, Leelanau County, Michigan.

The Service also announces the availability of a Habitat Conservation Plan (HCP), draft Implementing Agreement, and Draft Environmental Assessment (EA) for the incidental take application. Copies of the application package may be obtained by making a request to the Regional Office address below. Requests must be submitted in writing to be processed. This notice is provided pursuant to Section 10(c) of the Act and National Environmental Policy Act Regulations (40 CFR 1506.6).

**DATES:** Written comments on the permit application and HCP should be received on or before May 22, 2000.

**ADDRESSES:** Individuals wishing copies of the permit application, HCP, Implementing Agreement, or Draft EA, may contact the Service's Regional Office, Fort Snelling, Minnesota. The documents will also be available for public inspection, by appointment, during normal business hours at the Regional Office or the East Lansing Field Office. Written data or comments concerning the application, EA, or HCP should be submitted to the Regional Office. Please reference permit under TE–025433 in such comments.

U.S. Fish and Wildlife Service, 1 Federal Drive, Fort Snelling,

Minnesota 55111–4056, Telephone: 612/713–5343, Fax: 612/713–5292.

Field Supervisor, U.S. Fish and Wildlife Service, East Lansing Field Office, 2651 Coolidge Rd., Suite 101, East Lansing, Michigan 48823–6316, Telephone: 517/351–6274.

**FOR FURTHER INFORMATION CONTACT:** Pete Fasbender, Regional HCP Coordinator, U.S. Fish and Wildlife Service, Fort Snelling, Minnesota, telephone 612/713–5343.

**SUPPLEMENTARY INFORMATION:** Under Section 9 of the Act and applicable federal regulations, the ''taking'' of a species listed as endangered or threatened is prohibited. However, the Service, under limited circumstances, may issue permits to ''take'' listed species, provided such take is incidental to, and not the purpose of, an otherwise lawful activity. Regulations governing permits for endangered species are promulgated in 50 CFR 17.22 Regulations governing permits for threatened species are promulgated in 50 CFR 17.32.

## Background

Piping plovers are sensitive to human disturbance and the effects of human activity throughout the Great Lakes and Atlantic Coast breeding range lead to its listing as an endangered species in 1985. Human activity remains the primary threat to the species survival in the Great Lakes region. The proposed residential development consists of 13 single family residences located within the forested portion of a 91 acre tract at the north end of Kehl Road in Leelanau Township, Leelanau County, Michigan (SW¼SE¼, SE¼SW¼ Section 14, T32N R11W). Of the total 91 acre parcel proposed for development, a maximum of 3 acres may be potential piping plover habitat. The shoreline beach/dune area is an average of 85 feet wide (1999) and consists of equal portions of non-vegetated beach and vegetated low dunes with an abrupt edge along the forested area. The beach within the proposed development is not good nesting habitat and there are no records of piping plover nesting or other use on the property. Excellent nesting habitat occurs 0.5 mile west of the proposed development. Three and two pairs of piping plovers nested within Leelanau State Park in 1998 and 1999, respectively. Seven young plovers fledged in 1998, while seven hatched but disappeared prior to fledging in 1999. The Service believes the Applicant's property provides valuable foraging habitat for plovers nesting nearby. There is also potential for future plover nesting on the Applicant's property if an expanded plover population exhibits variation in breeding habitat characteristics or natural forces alter current beach characteristics.

The open dune portion of the Applicant's property contains several hundred individual Pitcher's thistle (*Cirsium pitcheri*), a threatened plant species. Boardwalks may be constructed through the vegetated dunes, but otherwise the project will not result in any construction on or other physical alteration of the beach portion of the property. Construction of the proposed project would result in human activity along a section of beach presently associated with undeveloped land. The HCP provides conservation or protective measures which would minimize or avoid potential negative effects to piping plovers of the proposed development. Protective measures include seasonal restriction of human use of the beach, control of domestic animals and other wild or feral predators, control of garbage, and the presence of a piping plover steward during selected periods. Unregulated trespass of the proposed development is expected to be eliminated by the presence of residence owners. No critical habitat for listed species currently occurs on the project site. However its consideration as piping plover critical habitat is expected by June 2000. The Proposed Action consists of the issuance of an incidental take permit and implementation of the HCP, which includes measures to minimize or avoid impacts of the project on the piping plover. The EA considers four alternatives to the Proposed Action. We will evaluate the permit application, the HCP, and comments submitted thereon to determine whether the application meets the requirements of section 10(a) of the Act. If the requirements are met, the Service will issue a permit to Magic Carpet Woods Association for the incidental take of the piping plover from human activity associated with residential development on the Association property. The final permit decision will be made no sooner than 30 days from the date of this notice.

Dated: April 12, 2000.

**T.J. Miller,**

*Acting Assistant Regional Director, Ecological Services, Region 3, Fort Snelling, Minnesota.*

[FR Doc. 00–9673 Filed 4–19–00; 8:45 am]

BILLING CODE 4310–55–M

## DEPARTMENT OF THE INTERIOR

## Fish and Wildlife Service

## Availability of a Draft Environmental Assessment, Preliminary Finding of No Significant Impact, and Notice of Receipt of an Application for an Enhancement of Survival Permit by The Nature Conservancy, Virginia Chapter, To Administer a ''Safe Harbor'' Program in Southeast Virginia

**AGENCY:** Fish and Wildlife Service, Interior.

**ACTION:** Notice.

**SUMMARY:** The Nature Conservancy, Virginia Chapter, (Applicant) has applied to the U.S. Fish and Wildlife Service (Service) for an enhancement of survival permit (ESP) pursuant to Section 10(a)(1)(A) of the Endangered Species Act of 1973, as amended (Act). The proposed ESP would authorize the incidental take of a federally endangered species, the red-cockaded woodpecker, *Picoides borealis* (RCW). The permit would authorize incidental take only on land that is enrolled in the proposed Safe Harbor program. (See the **SUPPLEMENTARY INFORMATION** section below.)

The Service also announces the availability of a draft environmental assessment (EA) and safe harbor plan for the ESP application. Copies of the EA and/or safe harbor plan may be obtained by making a request to the Northeast Regional Office (see **ADDRESSES**). Requests must be in writing to be processed. This notice also advises the public that the Service has made a preliminary determination that issuing the ESP is not a major Federal action significantly effecting the quality of the human environment within the meaning of Section 102(2)(C) of the National Environmental Policy Act of 1969, as amended (NEPA). The Finding of No Significant Impact (FONSI) is based on information contained in the EA and the safe harbor plan. The final determination will be made no sooner than 30 days from the date of this notice. An excerpt of the FONSI appears in the **SUPPLEMENTARY INFORMATION** section of this notice. This notice is provided pursuant to Section 10(c) of the Act and NEPA Regulations (40 CFR 1506.6).

**DATES:** Written comments on the permit application, EA/FONSI, and safe harbor plan should be sent to the Service's Northeast Regional Office (see **ADDRESSES**) and should be received on or before May 22, 2000.

**ADDRESSES:** Persons wishing to review the application, safe harbor plan, and

EA may obtain a copy by writing the Service's Northeast Regional Office, 300 Westgate Center Drive, Hadley, Massachusetts 01035. Documents will also be available for public inspection by appointment during normal business hours at the Regional Office, (Attn: Endangered Species Permits), or at the following Field Offices: Field Supervisor, Virginia Field Office, 6669 Short Lane, Gloucester, Virginia 23061; or Red-cockaded Woodpecker Recovery Coordinator, U.S. Fish and Wildlife Service, College of Forest and Recreational Resources, 261 Lehotsky Hall, Box 341003, Clemson, South Carolina 29634–1003 (telephone 864/656–2432). Written data or comments concerning the application, EA, or safe harbor plan should be submitted to the Regional Office. Requests for the documents must be in writing to be processed. Please reference permit number TE–0015147 in such comments, or in requests of the documents discussed herein.

**FOR FURTHER INFORMATION CONTACT:** Ms. Diane Lynch, Regional Permit Coordinator, (see **ADDRESSES** above), telephone: 413–253–8628; or Karen Mayne, Supervisor, Virginia Field Office, (see **ADDRESSES** above), telephone 804–693–6694 extension 103.

**SUPPLEMENTARY INFORMATION:** The RCW is a territorial, nonmigratory breeding bird species. RCWs live in social units called groups which generally consist of a breeding pair, the current year's offspring, and one or more helpers (normally adult male offspring of the breeding pair from previous years). Groups maintain year-round territories near their roost and nest trees. The RCW is unique among the North American woodpeckers in that it is the only woodpecker that excavates its roost and nest cavities in living pine trees. Each group member has its own cavity, although there may be multiple cavities in a single pine tree. The aggregate of cavity trees is called a cluster. RCWs forage for insects almost exclusively on pine trees and they generally prefer pines greater than 10 inches diameter at breast height. Foraging habitat is contiguous with the cluster. The number of acres required to supply adequate foraging habitat depends on the quantity and quality of the pine stems available.

The RCW is endemic to the pine forests of the Southeastern United States and was once widely distributed across 16 states. The species evolved in a fire-maintained mature pine forest ecosystem. The RCW has declined primarily due to the conversion of old stand pine forests to young pine plantations, agricultural fields, and residential and commercial developments, and to hardwood encroachment in existing pine forests due to fire suppression. The species is still widely distributed (presently occurs in 13 southeastern States), but remaining populations are highly fragmented and isolated. Presently, the largest known populations occur on federally owned lands such as military installations and national forests.

In Virginia, the majority of the known remaining RCWs (16 birds as of December, 1999), including all of the known breeding pairs, occur on The Nature Conservancy's Piney Grove Preserve in Sussex County. This is the northern most population of RCWs remaining. The Virginia Department of Game and Inland Fisheries, the U.S. Fish and Wildlife Service, and The Nature Conservancy concur that the future of the RCW in Virginia rests on management of the Piney Grove Preserve and the surrounding private lands.

The Service and several other agencies/organizations are working cooperatively to further develop an overall conservation strategy for the RCW population and the ecosystem upon which it depends. One component of this strategy is to expand the safe harbor program to other states and regions within the RCW's historic range. The Service recognizes that landowners presently have no legal or economic incentive to undertake proactive management actions, such as hardwood midstory removal, prescribed burning, or protecting future cavity trees, that will benefit and help recover the RCW. Indeed, landowners actually have a disincentive to undertake these actions because of land use limitations that could result if their management activities attract RCWs. However, some Virginia private landowners near the Piney Grove Preserve may be willing to take or permit actions that would benefit the RCW on their property if the possibility of future land use limitations could be reduced or eliminated.

Thus, the Applicant is proposing this Safe Harbor program, which is designed to encourage voluntary RCW habitat restoration or enhancement activities by relieving a landowner who enters into a cooperative agreement with the Service from any additional responsibility under the Act beyond that which exists at the time he or she enters into the agreement; *i.e.,* to provide a ''safe harbor.'' The cooperative agreement will identify any existing RCW clusters and will describe the actions that the landowner commits to take or allows to be taken to improve RCW habitat on the property (*e.g.*, hardwood midstory removal, establishment of cavities etc.), and the time period within which those actions are to be taken and maintained. Participating landowners who enter into cooperative agreements with the applicant will be included within the scope of the ESP by Certificates of Inclusion administered by The Nature Conservancy in coordination with the Virginia Department of Game and Inland Fisheries and the Service. A participating landowner must maintain the baseline habitat requirements on his/her property (*i.e.*, any existing RCW groups and associated habitat), but will be allowed to incidentally take RCWs at some point in the future on other habitat on the property if RCWs are attracted to the site by the proactive management measures undertaken by the landowner. No incidental taking of any existing RCW group is permitted under this program. Further details about this program are found in the safe harbor plan.

The EA considers the environmental consequences of two alternatives, including the preferred alternative—to implement the Safe Harbor program. The likely effects of the no-action alternative are the continued lack of management to benefit the RCW in many of the natural pine stands that remain near the Piney Grove Preserve, and the continued absence of RCWs on those lands. The proposed action alternative is the issuance of an enhancement of survival permit and implementation of the Safe Harbor program. The Service believes that the Safe Harbor will benefit the RCW in Virginia by providing additional habitat for future growth of the population.

The Service has made a preliminary determination that the issuance of the ESP is not a major Federal action significantly effecting the quality of the human environment within the meaning of Section 102(2)(C) of NEPA. This preliminary information may be revised due to public comment received in response to this notice and is based on information contained in the EA and safe harbor plan. An appropriate excerpt from the FONSI reflecting the Service's finding on the application is provided below:

Based on the analysis conducted by the Service, it has been determined that:

1. Issuance of an ESP would not have significant effects on the human environment in the project area.

2. Implementation of the safe harbor plan will result in a net conservation benefit for the RCW.

3. The proposed take will not appreciably reduce the likelihood of

survival and recovery of the species in the wild.

4. The indirect impacts that may result from issuance of the ESP are addressed by other regulations and statutes under the jurisdiction of other government entities. The validity of the Service's ESP is contingent upon the Applicant's compliance with the terms of the permit and all other laws and regulations under the control of State, local, and other Federal governmental entities.

The Service will also evaluate whether the issuance of a Section 10(a)(1)(A) ESP complies with Section 7 of the Act by conducting an intra-Service Section 7 consultation. The results of the biological opinion, in combination with the above findings, will be used in the final analysis to determine whether or not to issue the ESP.

Dated: April 12, 2000.

**Mamie Parker,**

*Deputy Regional Director, Region 5.*

[FR Doc. 00–9888 Filed 4–19–00; 8:45 am]

**BILLING CODE 4310–55–P**

---

## DEPARTMENT OF THE INTERIOR

### Fish and Wildlife Service

### The Rhinoceros and Tiger Conservation Act of 1998; Request for Public Input Into the Development and Execution of an Educational Outreach Program Action Plan; Announcement of Two Public Meetings

**AGENCY:** Fish and Wildlife Service, Interior.

**ACTION:** Notice.

**SUMMARY:** The Rhinoceros and Tiger Conservation Act of 1994 was amended in 1998 to prohibit the sale, importation, or exportation of products labeled or advertised as containing rhinoceros or tiger products, and to carry out an associated educational outreach program. Prior to developing and carrying out such an educational outreach effort, we seek input and guidance from the public on the needed components for such an effort. To guide this effort, we have developed a draft interim educational plan with the goals of a long-term plan clearly identified but action items developed only for a short time frame until we can meet with the public and solicit input for the development of future action items.

With this notice, we request your comments and input on the draft Educational Outreach Program Interim Action Plan and seek partnerships to carry out the final plan, and we announce two public meetings to discuss the draft Educational Outreach Program Interim Action Plan and suggested modifications for future activities under a long-term plan.

**DATES:** (1) Draft Educational Outreach Program Interim Action Plan review: If you wish to view a copy of the draft Educational Outreach Program Interim Action Plan, please submit a written request for a copy of this document to the address listed below within 30 days of the date of publication of this notice. We will consider written comments and suggestions you submit regarding the Educational Outreach Program Interim Action Plan if we receive them by June 19, 2000.

(2) Public Meetings: You are invited to participate in one or both of our Educational Outreach Action Plan public meetings, one to be held on the east coast on May 18, 2000, 1:30–4:30 p.m., and the second to be held on the west coast on June 4, 2000, 1:30–4:30 p.m.

**ADDRESSES:** (1) Educational Outreach Program Interim Action Plan review: Office of Management Authority; U.S. Fish and Wildlife Service; 4401 North Fairfax Drive; Room 700; Arlington, VA 22203. Comments on the draft Educational Outreach Program Interim Action Plan may be submitted by any one of several methods. You may mail comments to the above address. You may also comment via E-mail to r9oma__cites@fws.gov. Please submit E-mail comments as an ASCII file, avoiding the use of special characters and any form of encryption. Please also include ''Attn: Rhinoceros and Tiger Conservation Act of 1998'' and your name and return address in your E-mail message. If you do not receive a confirmation from the system that we have received your E-mail message, contact us directly at the telephone number listed below. Finally, you may hand-deliver comments to the above address.

Comments and materials received will be available for public inspection, by appointment, from 8 a.m. to 4 p.m., Monday through Friday, at the above address.

(2) Public Meetings: The two public meetings will be held (see **DATES** above) to discuss the Educational Outreach Action Plan. The first meeting will be held in New York at The College of Insurance, 101 Murray Street, New York, NY and the second in San Francisco at The Galleria Park Hotel, 191 Sutter Street, San Francisco, CA.

Directions to either location can be obtained by contacting the Office of Management Authority (see **FOR FURTHER INFORMATION CONTACT** below). Please note that both locations are accessible to the handicapped and all persons planning to attend the meeting will be required to present photo identification when entering the building. Persons planning to attend the meeting who require interpretation for the hearing impaired should notify the Office of Management Authority as soon as possible.

**FOR FURTHER INFORMATION CONTACT:** Teiko Saito, Chief, Office of Management Authority, Branch of CITES Operations, phone 703/358–2095, fax 703/358–2298, E-mail: r9oma__cites@fws.gov.

**SUPPLEMENTARY INFORMATION:**

### Background

Congress passed the Rhinoceros and Tiger Conservation Act of 1994 (the Act) to assist in the conservation of rhinoceroses and tigers by supporting critical conservation programs in nations whose activities directly or indirectly affect rhino and tiger populations. The Act also established the Rhinoceros and Tiger Conservation Fund to provide financial resources for on-the-ground conservation programs and to promote education to increase public awareness of the plight of rhinos and tigers in the wild.

Rhinoceroses and tigers are among the most critically endangered large mammals in the world and are the focus of extensive global conservation efforts aimed at halting their decline. Consumer demand for and trade in the parts and products of these species supply luxury markets as well as markets for cultural and medicinal needs. One of the most complex and far-reaching of these demands is for use in traditional medicines.

Commercial international trade of raw rhino horn and tiger bone and their derivative products is prohibited by the Convention on International Trade in Endangered Species of Wild Fauna and Flora (CITES), in addition to domestic legislation in the United States and China. The Act of 1994 was amended and strengthened by the Rhinoceros and Tiger Conservation Act of 1998, which (a) outlined specific trade prohibitions of rhino and tiger products and (b) mandated a national educational outreach program.

(a) The Act of 1998 ''prohibits the sale, importation, exportation, or attempts to sell, import, or export, any product, item, or substance intended for human consumption or application, containing, or labeled or advertised as containing, any substance derived from any species of rhinoceros or tiger.''

Further, specific criminal and civil penalties for violating this law are included, as well as enforcement strategies. This Act sets prohibitions on items labeled or advertised as containing rhino or tiger products, even if the presence of rhino and tiger ingredients cannot be verified scientifically. These new prohibitions will reduce the promotion of these ingredients in consumer products, thereby decreasing consumer demand and potentially benefitting the species in the wild.

(b) The amended Act also requires that the Secretary of the Interior develop and carry out an educational outreach program in the United States for the conservation of rhinoceros and tiger species. The contents of the Educational Outreach Program Action Plan will include:

(1) Guidelines for the National Educational Outreach Program;

(2) Active pursuit of opinions from organizations and people actively involved in the traditional medicines trade;

(3) Aggressive advertising of the laws protecting rhinoceros and tiger species, focusing on the laws prohibiting trade in products containing, or labeled or advertised as containing, their parts or products;

(4) Widespread distribution of information regarding the negative effects of the toxics and heavy metals found in some packaged traditional medicines; and

(5) Information on the status of rhinoceros and tiger species populations and the reasons for protecting the species.

Through this **Federal Register** notice and the two scheduled public meetings, we are seeking public input into the development and execution of the Educational Outreach Program Action Plan. Our practice is to make comments, including names and addresses of respondents, available for public review during regular business hours. Individual respondents may request that we withhold their home address from the public record, which we will honor to the extent allowable by law. In limited circumstances, we would withhold from release a respondent's identity, as allowable by law. If you wish us to withhold your name and/or address, you must state this clearly at the beginning of your comment. However, we will not consider anonymous comments. We generally make all submissions from organizations or businesses, and from individuals identifying themselves as representatives or officials of organizations or businesses, available for public inspection in their entirety.

We hope to work closely with the nonprofit conservation community and traditional medicine communities as well as the public in creating a strong outreach plan and carrying out the contents of that plan. We recognize that a number of groups are already actively involved in educating the public about rhinoceros and tiger products and the conservation of these species, and we wish to integrate our efforts with theirs. Partnerships hold the key to successfully informing the public about the conservation needs of rhinoceros and tiger species. We are looking to identify partner organizations that we can work with in carrying out the long-term objectives and actions of a national outreach plan. The purpose of the two scheduled public meetings is to solicit additional public input into the completion of a final Educational Outreach Program Action Plan, as well as to serve as a starting point for future interactions with communities that have historically used products containing rhino horn and tiger part derivatives. After receiving public input, we will develop a long-term national educational outreach plan and program that will rely strongly on public involvement in its future implementation.

**Author:** This notice was prepared by Cynthia Perera and Anne St. John, Office of Management Authority, under the authority of The Rhinoceros and Tiger Conservation Act of 1998 (16 U.S.C. 5301).

Dated: April 7, 2000.

**Jamie Rappaport Clark,**

*Director, U.S. Fish and Wildlife Service.*

[FR Doc. 00–9914 Filed 4–19–00; 8:45 am]

BILLING CODE 4310–55–P

---

## DEPARTMENT OF THE INTERIOR

### Bureau of Land Management

**[NV–030–1920–00–4032]**

### Environmental Statements; Notice of Intent: Walker River Basin, NV; Water and/or Water Rights From Willing Sellers

Amendment to the February 1, 2000 Notice of Intent to Prepare an Environmental Impact Statement for obtaining water and/or water rights from willing sellers in the Walker River Basin for the purposes of protecting the Walker Lake ecosystem from degradation resulting from increasing total dissolved solids (TDS) in the lake; possible use in a settlement of the United States' water rights claims in the Walker River Basin should a settlement be negotiated; and to assist in recovery of the threatened Lahontan cutthroat trout in the Walker River Basin.

**AGENCY:** Bureau of Land Management, Carson City Field Office, 5665 Morgan Mill Road, Carson City, NV 89701.

**ACTION:** Amendment to the February 1, 2000 notice of intent to prepare an environmental impact statement for obtaining water and/or water rights from willing sellers in the Walker River Basin, notice of scoping period. The initial public scoping period will be extended to July 31, 2000. The public review and comment period on the draft EIS will be increased to 75 days.

---

**SUMMARY:** The Bureau of Land Management (BLM), Carson City Field Office, in cooperation with the Bureau of Indian Affairs (BIA), Phoenix Area Office, The Bureau of Reclamation (BOR), Lahontan Basin Area Office and the U.S. Fish and Wildlife Service (FWS), Nevada Fish and Wildlife Office, will extend the initial public scoping period until July 31, 2000 and increase the time allowed for public review and comment on the draft EIS to 75 days. This extended initial public scoping period is necessary for the following reasons: (1) To allow potential cooperating agencies to make decisions in regards to their status in this project and participate early in the NEPA process, (2) the complex issues, to be investigated in this EIS, require additional time for consideration and refinement, and (3) additional time is needed to develop alternatives for consideration in the EIS. The increased time allowed for public review and comment on the draft EIS is necessary to allow local governments adequate time for review of the document and consideration of these matters at regularly scheduled meeting of the County Board of Commissioners.

**EFFECTIVE DATES:** The initial public scoping period is extended until July 31, 2000.

A Draft EIS (DEIS) is expected to be completed by November 24, 2000 and made available for public review and comment. The public review and comment period on the DEIS will be 75 days from the date the Notice of Availability (NOA) is published in the **Federal Register** which is anticipated to occur on November 24, 2000.

**FOR FURTHER INFORMATION CONTACT:** For additional information, write to the Field Manager of the Carson City Field Office at the address listed in the agency section of this notice, call or email Walt Devaurs (BLM Team Leader) at (775) 885–6150, wdevaurs@nv.blm.gov or

Mike McQueen (BLM NEPA Coordinator) at (775) 885–6120, mmcqueen@nv.blm.gov.

**SUPPLEMENTARY INFORMATION:** The proposed EIS schedule is as follows:

| | |
|---|---|
| Begin Initial Public Comment Period. | Feb. 1, 2000. |
| End Initial Public Scoping Period. | July 31, 2000. |
| Issue Draft EIS (75 day public review). | Nov. 24, 2000. |
| End Draft EIS Public Review. | Feb. 7, 2000. |
| Issue Final EIS (30 day public review). | June 1, 2001. |
| Issue Record of Decision. | Aug. 5, 2001. |
| End 30-day Appeal Period/Implementation. | Sept. 5, 2001. |

Dated: April 14, 2000.

**Mike McQueen,**

*Field Office Manager.*

[FR Doc. 00–9892 Filed 4–19–00; 8:45 am]

BILLING CODE 4310–HC–P

## DEPARTMENT OF THE INTERIOR

### Bureau of Land Management

**[CO–500 0777–XQ]**

### Front Range Resource Advisory Council (Colorado) Meeting

**AGENCY:** Bureau of Land Management, Interior.

**ACTION:** Notice of Meeting.

**SUMMARY:** In accordance with the Federal Advisory Committee Act of 1972 (FACA), 5 U.S.C. Appendix, notice is hereby given that the next meeting of the Front Range Resource Advisory Council (Colorado) will be held on May 11, 2000 in Canon City, Colorado.

The meeting is scheduled to begin at 9:15 a.m. at the Holy Cross Abbey Community Center, 2951 E. Highway 50, Canon City, Colorado. Topics will include a discussion on the Mining Regulations and update on the Recreation Guidelines for Colorado.

All Resource Advisory Council meetings are open to the public. Interested persons may make oral statements to the Council at 9:30 a.m. or written statements may be submitted for the Council's consideration. The Center Manager may limit the length of oral presentations depending on the number of people wishing to speak.

**DATES:** The meeting is scheduled for Thursday, May 11, 2000, from 9:15 a.m. to 4 p.m.

**ADDRESSES:** Bureau of Land Management (BLM), Front Range Center, 3170 East Main Street, Canon City, Colorado 81212.

**FOR FURTHER INFORMATION CONTACT:** Ken Smith at (719) 269–8553.

**SUPPLEMENTARY INFORMATION:** Summary minutes for the Council meeting will be maintained in the Front Range Center and will be available for public inspection and reproduction during regular business hours within thirty (30) days following the meeting.

Dated: April 11, 2000.

**Stuart L. Freer,**

*Associate Front Range Center Manager.*

[FR Doc. 00–9856 Filed 4–19–00; 8:45 am]

BILLING CODE 4310–JB–P

## DEPARTMENT OF THE INTERIOR

### Bureau of Land Management

**[ID–080–1210–PG]**

### Notice of Resource Advisory Council Meeting

**AGENCY:** Bureau of Land Management, Upper Columbia—Salmon Clearwater District, Idaho.

**ACTION:** Notice of Resource Advisory Council Meeting.

**SUMMARY:** In accordance with the Federal Land Policy and Management Act and the Federal Advisory Committee Act of 1972 (FACA), 5 U.S.C. Appendix, the Bureau of Land Management (BLM) announces the meeting of the Upper Columbia—Salmon Clearwater District Resource Advisory Council (RAC) on Tuesday, May 9, 2000 at the District Office, 1808 N. Third St., Coeur d'Alene, Idaho. A telephone patch will be available at the Salmon-Challis National Forest Headquarters office located on U.S. 93, one mile south of Salmon, Idaho.

Agenda items include an update from the Recreation Sub-Group on its findings concerning the potential use of funds collected through the Salmon-Challis National Forest's Salmon River fee demonstration project and identification of future issues for RAC consideration. The meeting will begin at 10:00 a.m. (PDT). The public may address the Council during the public comment period from 10:20 a.m.–10:50 a.m. (PDT). Those wishing to address the Council should contact Ted Graf, RAC Coordinator, at (208) 769–5004 at least 24 hours prior to the meeting.

**SUPPLEMENTARY INFORMATION:** All Resource Advisory Council meetings are open to the public. Interested persons may make oral statements to the Council, or written statements may be submitted for the Council's consideration. Depending on the number of persons wishing to make oral statements, a per-person time limit may be established by the Designated Federal Official.

The Council's responsibilities include providing recommendations concerning long-range planning and establishing resource management priorities.

**FOR FURTHER INFORMATION CONTACT:** Ted Graf (208)769–5004.

Dated: April 13, 2000.

**Ted Graf,**

*Acting District Manager.*

[FR Doc. 00–9889 Filed 4–19–00; 8:45 am]

BILLING CODE 4310–GG–M

## DEPARTMENT OF THE INTERIOR

### Bureau of Land Management

**[AZ–910–0777–26–241A]**

### State of Arizona Resource Advisory Council Meeting

**AGENCY:** Bureau of Land Management, Interior.

**ACTION:** Arizona Resource Advisory Council Meeting notice.

**SUMMARY:** This notice announces a meeting and tour of the Arizona Resource Advisory Council (RAC). The meeting will be held on May 11, 2000, at the Sierra Suites Hotel, 391 E. Fry Blvd., located in Sierra Vista, Arizona. It will begin at 9:00 a.m. and will conclude at approximately 4:00 p.m. The agenda items to be covered include the review of the March 31, 2000, meeting minutes; BLM State Director's Update on legislation, regulations, and statewide planning efforts; Update on Wild Horse and Burro Strategic Plan Comments; Video Presentation of Secretary Babbitt's Address on National Landscape Conservation System; Presentation on Wilderness Access/Valid Existing Rights and Recent IBLA Decisions; Update Proposed Field Office Rangeland Resource Teams; Reports from BLM Field Office Managers; Reports by the Standards and Guidelines, Recreation and Public Relations, Wild Horse and Burro Working Groups; Reports from RAC members; and Discussion of future meetings. A public comment period will be provided at 11:00 a.m. on May 11, 2000, for any interested publics who wish to address the Council. On May 12, the RAC will tour the BLM San Pedro Riparian National Conservation Area. The tour will highlight some of the issues facing the San Pedro River and the riparian corridor, including

recreation, wildlife, water and border issues.

**FOR FURTHER INFORMATION CONTACT:** Deborah Stevens, Bureau of Land Management, Arizona State Office, 222 North Central Avenue, Phoenix, Arizona 85004–2203, (602) 417–9215.

**Denise P. Meridith,**

*Arizona State Director.*

[FR Doc. 00–9890 Filed 4–19–00; 8:45 am]

BILLING CODE 4310–32–M

## DEPARTMENT OF THE INTERIOR

## Bureau of Land Management

**[MT010–1220–DA]**

## Notice of Pryor Mountain Area Off-Highway Vehicle (OHV) Designation

**AGENCY:** Bureau of Land Management, DOI.

**ACTION:** Notice is hereby given that 92,000 acres of public land will be designated as open, closed, or limited to OHV use in the Pryor Mountain area pursuant to 43 CFR, Part 8342.1 and Executive Order 11644.

**SUMMARY:** The area affected has been previously designated. This notice is to update and correct errors in the September 25, 1979 and August 4, 1987 designations. The area affected is located approximately 80 miles south of Billings, Montana, in Carbon County described as follows:

All OHV use on the following public lands are limited to designated open roads and authorized use.

T.7S., R.25E., all public lands in Sections 22, 23, 27–29, Section 32 SESE, 33 & 34.

T.8S., R.25E., all public land in Sections 3, 4, 9, 10, 14, 15, 22 & 23 and in Section 5 all public lands east of the Pryor Gap Road.

T.8S., R.26E., all public lands in Sections 31 & 32.

T.9S., R.26E., all public lands in Sections 1–4, 10–15, 22–27, 34, 35, and public lands north of Helt Road [1016] in Sections 5, 6, 8, 9.

T.9S., R.27E., all public land.

T.8S., R.28E., all public land.

T.9S., R.28E., all public land.

The following roads are designated open within the Pryor Mountain area:

Bear Canyon Ridge Road [1031] from East Horsehaven [1030] T.9S., R.26E., Section 2, meandering north to the Custer National Forest in Section 2.

Bear Canyon Road [1014] from the intersection of Helt Road [1016], NW, Section 9, T.9S., R.26E., meandering northeast for approximately 3 miles to within ½ mile of the National forest where it divides into two roads, [1014, 1041] both of which are open to the Custer National Forest.

Bent Springs Road [1039] from T.7S., R.25E., Section 29 meandering east for about 2½ miles to the Custer National Forest.

Burnt-Timber Ridge Road [1018] starting in Section 25, T.9S., R.27E., meandering north for approximately 10 miles becoming USFS Road 2849 through public land Section 18, T.8S., R.28E.

Crooked Creek Road [1017] from T.9S., R.27E., Section 33, meandering north to the Custer National Forest Section 3, T.9S., R.27E.

Dandy Mine Road [1034] from junction of Red Pryor Mountain Road, T.9S., R.27E., Section 9 meandering east to the junction of Crooked Creek Road [1017] T.9S., R.27E., Section 9.

Demi John Flat Road [1035] is designated as open. The road starts at Crooked Creek Road [1017] at the north boundary of Section 3, T.9S., R.27E., and southerly approximately 2 miles to the south boundary of Section 10.

East Horsehaven Road [1030] starting in T.9S., R.27E., Section 18, meandering north then northeast in Section 6, T.9S., R.27E., to the Custer National Forest.

East Petroglyph Canyon Road [1040] from T.9S., R.26E., Section 24 meandering south for approximately 1¼ miles to Montana State land, Section 36.

Gyp Spring Road [1015] starting at T.10S., R.27E., Section 4, meandering NW for approximately 6 miles to T.9S., R.26E. Section 9.

Helt Road [1016] from T.9S., R.27E., Section 33 meandering north then west, approximately 14 miles to the NWNE, Section 1, T.9S., R.25E.

Inferno Canyon Road [1050] from T.8S., R.25E., south boundary of Section 11, USFS boundary extends southwesterly approximately 1½ miles to the south boundary of Section 15. Also that portion of the road which connects Bent Spring Road, Timber Canyon Road, Water Canyon Road and Inferno Canyon Road that crosses public land is designated open.

Lower Timber Ridge Road [1048] goes north across T.8S., R.25E. Section 4, ¾ mile to Timber Ridge Road [1047].

Miller Trail Road [1046] starts in SESE of Section 32, T.7N., R.25E. and proceeds approximately 2¼ miles to the NE corner, Section 34, Custer National Forest boundary.

Red Pryor Mountain Road [1022] starting T.9S., R.27E., Section 17, at the junction of Helt Road [1016] meandering north for approximately 3 miles to the Custer National Forest.

Stockman Trail [1013] from T.9S., R.26E., Section 6, meandering north for approximately 2 miles through the Custer National Forest.

Sykes Road East Loop [1033] from the intersection of Sykes Ridge Road [1019] in the NW Section 34, T.9S., R.28E., to the point it returns to Sykes Ridge Road [1019] in the NWNE Section 28.

Sykes Ridge Road [1019] starting at T.58N., R.95W., Section 23 meandering north for approximately 12 miles to T.8S., R.28E., Section 17.

Sykes Spring Road [1052] starts at junction of Sykes Ridge Road [1019], SW Section 23, T.58N., R95W north to Montana-Wyoming line.

Timber Canyon Road [1049] from T.7S., R.25E. Section 9 meandering northeast for about 1 mile then ends.

Timber Ridge Road [1047] from USFS boundary at the east boundary of Section 3, T.8S., R.25E., and extends west approximately 2 miles to the west boundary of the SENW, Section 4.

Water Canyon Road [1051] T.8S., R.25E., Section 10 from west line of Section 10 approximately 1 mile to Custer National Forest.

West Horsehaven Road [1021] starting in T.9E., R.26E., Section 10 meandering northeast then southeast to the junction of East Horsehaven [1030].

West Petroglyph Canyon Road [1036] from T.9S., R.26E., Section 24 meandering southeast for approximately 1¼ miles to T.9S., R.26E., Section 26.

**DATES:** Any issues or concerns should be submitted to the BLM at the below address on or before May 22, 2000.

**FOR FURTHER INFORMATION CONTACT:** David Jaynes, Assistant Field Manager, BLM, PO BOX 36800, 5001 Southgate Drive, Billings, Montana 59107 or 406–896–5013.

Dated: April 14, 2000.

**Sandra S Brooks,**

*Field Manager.*

[FR Doc. 00–9891 Filed 4–19–00; 8:45 am]

BILLING CODE 4310–$$–P

## DEPARTMENT OF THE INTERIOR

## Bureau of Reclamation

## State of Nevada Assembly Bill 380, Newlands Project, NV

**AGENCY:** Bureau of Reclamation, Interior.

**ACTION:** Notice of intent to prepare an environmental document (environmental assessment or environmental impact statement) and notice of public meetings.

**SUMMARY:** Pursuant to Section 102(2)(C) of the National Environmental Policy Act (NEPA) of 1969, as amended, the Bureau of Reclamation (Reclamation)

proposes to prepare an environmental document. The environmental document is for the purpose of evaluating the effects of Reclamation providing approximately $7,000,000 of Federal funds over a period of years, along with monies from other entities, to partially support the Newlands Project Water Rights fund, a program for the acquisition and retirement of 6,500 acres of surface water rights in Reclamation's Newlands Project. This action is outlined in the State of Nevada Assembly Bill Number 380 (A.B. 380).

At present it is not clear whether the scope of the action and anticipated project impacts will require preparation of an environmental impact statement (EIS) instead of an environmental assessment (EA). However, to ensure the timely and appropriate level of NEPA compliance and to limit potential future delays to the project schedule, Reclamation is proceeding as if the project impacts can be adequately analyzed through preparation of an EA. Reclamation will reevaluate the need for an EIS after obtaining written and oral comments on the project scope, alternatives and environmental impacts, and after Reclamation's evaluation of potential impacts of the proposed project. Reclamation will publish a notice of change if a decision is made to prepare an EIS rather than an EA. However, the scoping process to be conducted will suffice for either course of action.

There are no known environmental justice issues associated with the proposed action. The water acquisition program supported by Reclamation funds will avoid, where possible, any adverse impacts to Indian Trust Assets. If adverse impacts cannot be avoided, appropriate mitigation or compensation will be provided.

**DATES:** Four scoping meetings will be held to solicit comments from interested parties to assist in determining the scope of the environmental analysis and to identify the significant issues related to this proposed action. The meeting dates are:

- Monday, May 8, 2000, at 7:00 p.m., in Fallon, Nevada.
- Tuesday, May 9, 2000, at 7:00 p.m., in Fernley, Nevada.
- Wednesday, May 10, 2000, at 7:00 p.m., in Nixon, Nevada.
- Thursday, May 11, 2000, at 7:00 p.m., in Carson City, Nevada.

Written comments on the scope of the environmental documents should be submitted by May 25, 2000, to the address listed below.

**ADDRESSES:** The meeting locations are as follows:

- Fallon—Fallon Convention Center, 100 Campus Way, Fallon, NV 89406; telephone: (775) 423–4556.
- Fernley—Fernley Town Complex, 595 Silver Lace Blvd., Suite 117, Fernley, NV 89408; telephone: (775) 575–5455.
- Nixon—Pyramid Lake Paiute Tribe Council Chambers, 208 Capital Hill (Highway 447) Nixon, NV 89424; telephone: (775) 574–1000.
- Carson City—Nevada State Library, 100 N Stewart Street, Conference Room A, Carson City, NV 89701; telephone: (775) 684–3313.

Written comments on the scope of the environmental documents should be submitted to Caryn Huntt DeCarlo, Environmental Specialist, Bureau of Reclamation, Lahontan Basin Area Office, Attention: LO–450, P.O. Box 640, Carson City, NV 89702.

Our practice is to make comments, including names and home addresses of respondents, available for public review. Individual respondents may request that we withhold their home address from public disclosure, which we will honor to the extent allowable by law. There also may be circumstances in which we would withhold a respondent's's identity from public disclosure, as allowable by law. If you wish us to withhold your name and/or address, you must state this prominently at the beginning of your comment. We will make all submissions from organizations or businesses, and from individuals identifying themselves as representatives or officials of organizations or businesses, available for public disclosure in their entirety.

**FOR FURTHER INFORMATION CONTACT:** Caryn Huntt DeCarlo at telephone and TDD: (775) 882–3436, Lahontan Basin Area Office, Attention: LO–450, P.O. Box 640, Carson City, NV 89702.

**SUPPLEMENTARY INFORMATION:** The purpose of the Newlands Project Water Rights Fund program is to provide a mechanism for meeting some of the goals outlined in A.B. 380 through acquisition and retirement of 6,500 acres of surface water rights. The goals of A.B. 380 include resolving certain administrative and judicial proceedings involving challenges to Newlands Project and Truckee Meadows water rights. These proceedings are time consuming and costly for all parties involved, and the need for resolution is the purpose of A.B. 380 and the water rights acquisition and retirement program.

### Special Services

Persons requiring any special services should contact Caryn Huntt DeCarlo at (775) 882–3436. Please notify Ms. Huntt DeCarlo as far in advance of the particular meeting as possible, but no later than 3 working days prior to the meeting to enable Reclamation to secure the services. If a request cannot be honored, the requester will be notified.

Dated: April 14, 2000.

**Frank Michny,**

*Regional Environmental Officer.*

[FR Doc. 00–9894 Filed 4–19–00; 8:45 am]

BILLING CODE 4310–94–P

---

## DEPARTMENT OF THE INTERIOR

## Bureau of Reclamation

## Notice of Availability of a Draft Agency Handbook on the National Environmental Policy Act

**AGENCY:** Bureau of Reclamation, Interior.

**ACTION:** Notice of availability of a draft agency handbook on the National Environmental Policy Act.

**SUMMARY:** Pursuant to the Council on Environmental Quality's Regulations for Implementing the Procedural Provisions of the National Environmental Policy Act (NEPA), Section 1507.3, the Bureau of Reclamation has prepared a handbook to provide basic guidance to its employees on NEPA issues. Comments on the document will be accepted.

**DATES:** A 60-day public review period commences with the publication of this notice. Comments must be submitted to Reclamation at the addresses provided below no later than June 19, 2000.

**ADDRESSES:** Written comments on the NEPA Handbook should be addressed to the Bureau of Reclamation, Office of Policy, Attention: Dr. Darrell Cauley, Manager—Environmental and Planning Coordination, D–5100, Denver Federal Center, PO Box 25007, Denver, CO 80225–0007.

Our practice is to make comments, including names and home addresses of respondents, available for public review. Individual respondents may request that we withhold their home address from public disclosure, which we will honor to the extent allowable by law. There also may be circumstances in which we would withhold a respondent's identity from public disclosure, as allowable by law. If you wish us to withhold your name and/or address, you must state this prominently at the beginning of your comment. We will make all submissions from organizations or businesses, and from individuals identifying themselves

as representatives or officials of organizations or businesses, available for public disclosure in their entirety.

The entire document is available at http://www.usbr.gov/nepa on the Internet. Copies of the NEPA Handbook may also be requested from Theresa Taylor at the above address or via the INTERNET at nepa@do.usbr.gov or by calling (303) 445–2826.

Copies of the NEPA Handbook are available for public inspection and review at the following locations:

- Bureau of Reclamation, Reclamation Service Center Library, Building 67, Room 167, Denver Federal Center, 6th and Kipling, Denver, Colorado 80225; telephone: (303) 445–2072
- Natural Resources Library, U.S. Department of the Interior, 1849 C Street NW, Main Interior Building, Washington, DC 20240–0001

**FOR FURTHER INFORMATION CONTACT:** Theresa Taylor, Bureau of Reclamation, Office of Policy, at (303) 445–2826.

**SUPPLEMENTARY INFORMATION:** The NEPA Handbook was developed to assist Reclamation employees who are required to comply with the National Environmental Policy Act and various other environmental laws as part of their daily work. The document was first published in 1991. After Reclamation was reorganized in 1994 to reflect a decentralization of decision making and authority, the NEPA Handbook needed major revisions to reflect the reorganization and to update the content. The handbook was extensively revised and has gone through various stages of reviews both internally and with the Council on Environmental Quality. At the commencement of the public review, comments received will be considered as part of a final revision of the handbook.

Dated: April 13, 2000.

**Elizabeth Cordova-Harrison,**

*Deputy Director, Office of Policy.*

[FR Doc. 00–9893 Filed 4–19–00; 8:45 am]

**BILLING CODE 4310–94–M**

## DEPARTMENT OF LABOR

### Mine Safety and Health Administration

### Proposed Information Collection Request; Submitted for Public Comment and Recommendations; Safety Standards for Roof Bolts in Metal and Nonmetal Mines and Underground Coal Mines

**ACTION:** Notice.

**SUMMARY:** The Department of Labor, as part of its continuing effort to reduce paperwork and respondent burden conducts a preclearance consultation program to provide the general public and Federal agencies with an opportunity to comment on proposed and/or continuing collections of information in accordance with the Paperwork Reduction Act of 1995 (PRA95) [44 U.S.C. 3506(c)(2)(A)]. This program helps to ensure that requested data can be provided in the desired format, reporting burden (time and financial resources) is minimized, collection instruments are clearly understood, and the impact of collection requirements on respondents can be properly assessed.

**DATES:** Submit comments on or before June 19, 2000.

**ADDRESSES:** Send comments to Theresa M. O'Malley, Program Analysis Officer, Office of Program Evaluation and Information Resources, 4015 Wilson Boulevard, Room 715, Arlington, VA 22203–1984. Commenters are encouraged to send their comments on a computer disk, or via Internet E-mail to tomalley@msha.gov, along with an original printed copy. Ms. O'Malley can be reached at (703) 235–1470 (voice), or (703) 235–1563 (facsimile). Ms. O'Malley can be reached at tomalley@msha.gov (Internet E-mail), (703) 235–1470 (voice), or (703) 235–1563 (facsimile).

**SUPPLEMENTARY INFORMATION:**

### I. Background

30 CFR 56/57.3203 and 75.204 address the quality of rock fixtures and their installation. Roof and rock bolts and accessories are an integral part of ground control systems and are used to prevent the fall of roof, face, and ribs. These standards require that metal and nonmetal and coal mine operators obtain a certification from the manufacturer that rock bolts and accessories are manufactured and tested in accordance with the 1995 American Society for Testing and Materials (ASTM) publication ''Standard Specification for Roof and Rock Bolts and Accessories'' (ASTM F432–95).

### II. Desired Focus of Comments

Currently, the Mine Safety and Health Administration (MSHA) is soliciting comments concerning the proposed extension of the information collection related to the Safety Standards for Roof Bolts in Metal and Nonmetal Mines and Underground Coal Mines. MSHA is particularly interested in comments which:

- Evaluate whether the proposed collection of information is necessary for the proper performance of the functions of the agency, including whether the information will have practical utility;
- Evaluate the accuracy of the agency's estimate of the burden of the proposed collection of information, including the validity of the methodology and assumptions used;
- Enhance the quality, utility, and clarity of the information to be collected; and
- Minimize the burden of the collection of information on those who are to respond, including through the use of appropriate automated, electronic, mechanical, or other technological
- Enhance the quality, utility, and clarity of the information to be collected; and
- Minimize the burden of the collection of information on those who are to respond, including through the use of appropriate automated, electronic, mechanical, or other technological collectin techniques or other forms of information technology, *e.g.*, permitting electronic submissions of responses.

A copy of the proposed information collection request may be viewed on the Internet by accessing the MSHA Home Page (*http://www.msha.gov*) and then choosing ''Statutory and Regulatory Information'' and ''Paperwork Reduction Act Supporting Statements (*http://www.msha.gov/regspwork.htm*)'', or contacting the employee listed above in the For Further Information Contact section of this notice.

### *III. Current Actions*

MSHA is seeking to continue the requirement for mine operators to obtain certification from the manufacturer that roof and rock bolts and accessories are manufactured and tested in accordance with the applicable American Society for Testing and Materials (ASTM) specifications and make that certification available to an authorized representative of the Secretary.

*Type of Review:*

*Agency:* Mine Safety and Health Administration.

*Title:* Safety Standards for Roof Bolts in Metal and Nonmetal Mines and Underground Coal Mines (30 CFR 56.3203(a), 57.3203(a), and 75.204(a)).

*OMB Number:* 1219–0121.

*Affected Public:* Business or other for-profit.

| Cite/reference | Total respondents | Frequency | Total responses | Average time per response (hours) | Burden hours* |
|---|---|---|---|---|---|
| 30 CFR 56/57.3203(a) | 252 M/NM Surface | On Occasion | 1,008 | 0.05 | 50.4 |
| | 190 M/NM Underground | On Occasion | 1,520 | 0.05 | 76.0 |
| 75.204(a) | 761 Coal Underground | On Occassion | 6,088 | 0.05 | 304.4 |
| Total | 1,203 | | 8,616 | | 430.8 |

*Discrepancies due to rounding.

*Total Burden Cost (capital/startup):* $0.

*Total Burden Cost (operating/maintaining):* $0.

Comments submitted in response to this notice will be summarized and/or included in the request for Office of Management and Budget approval of the information collection request; they will also become a matter of public record.

Dated: April 14, 2000.

**George M. Fesak,**

*Director, Program Evaluation and Information Resources.*

[FR Doc. 00–9910 Filed 4–19–00; 8:45 am]

BILLING CODE 4510–43–M

## NATIONAL SCIENCE FOUNDATION

### Notice of Permits Issued Under the Antarctic Conservation Act of 1978

**AGENCY:** National Science Foundation.

**ACTION:** Notice of permits issued under the Antarctic Conservation of 1978, Public Law 95–541.

**SUMMARY:** The National Science Foundation (NSF) is required to publish notice of permits issued under the Antarctic Conservation Act of 1978. This is the required notice.

**FOR FURTHER INFORMATION CONTACT:** Nadene G. Kennedy, Permit Office, Office of Polar Programs, Rm. 755, National Science Foundation, 4201 Wilson Boulevard, Arlington, VA 22230.

**SUPPLEMENTARY INFORMATION:** On February 9, 2000, the National Science Foundation published a notice in the **Federal Register** of permit applications received. Permits were issued on March 23, 2000 to the following applicant:

Raytheon Polar Service Company (RPSC)

Permit No. 2001–001
Permit No. 2001–002
Permit No. 2001–003
Permit No. 2001–004
Permit No. 2001–005

**Nadene G. Kennedy,**

*Permit Officer.*

[FR Doc. 00–9880 Filed 4–19–00; 8:45 am]

BILLING CODE 7555–01–M

## NATIONAL SCIENCE FOUNDATION

### Notice of Permit Modification Issued Under the Antarctic Conservation Act of 1978

**AGENCY:** National Science Foundation.

**ACTION:** Notice of permit modification issued under the Antarctic Conservation Act of 1978, Public Law 95–541.

**SUMMARY:** The National Science Foundation (NSF) is required to publish notice of permits issued under the Antarctic Conservation Act of 1978. This is the required notice.

**FOR FURTHER INFORMATION CONTACT:** Nadene G. Kennedy, Permit Officer, Office of Polar Programs, Rm. 755, National Science Foundation, 4201 Wilson Boulevard, Arlington, VA 22230.

**SUPPLEMENTARY INFORMATION:** On February 17, 2000, notice was published in the **Federal Register** of a request for modification to permit 2000WM–01 (ASA) for waste management activities at all U.S. Antarctic Program facilities in Antarctica. The requested modification transfers responsibility for waste management activities from the incumbent support contractor, Antarctic Support Associates, to Raytheon Polar Services Company. The transfer modified the permit to change the permit holder from Antarctic Support Associates to Raytheon Polar Services Company, who is the sole holder of the permit. All special conditions of the original permit remain the same except for the change in name of the permit holder. All references to Antarctic Support Associates now apply to Raytheon Polar Services Company.

**Nadene G. Kennedy,**

*Permit Officer.*

[FR Doc. 00–9881 Filed 4–19–00; 8:45 am]

BILLING CODE 7555–01–M

## RAILROAD RETIREMENT BOARD

### Agency Forms Submitted for OMB Review

**SUMMARY:** In accordance with the Paperwork Reduction Act of 1995 (44 U.S.C. Chapter 35), the Railroad Retirement Board (RRB) has submitted the following proposal(s) for the collection of information to the Office of Management and Budget for review and approval.

**Summary of Proposal(s)**

(1) *Collection title:* Survivor Questionnaire.

(2) *Form(s) submitted:* RL–94–F.

(3) *OMB Number:* 3220–0032.

(4) *Expiration date of current OMB clearance:* 6/30/2000.

(5) *Type of request:* Extension of a currently approved collection.

(6) *Respondents:* Individuals or households.

(7) *Estimated annual number of respondents:* 8,000.

(8) *Total annual responses:* 8,000.

(9) *Total annual reporting hours:* 1,391.

(10) *Collection description:* Under Section 6 of the Railroad Retirement Act, benefits are payable to the survivors or the estate of deceased railroad employees. The Collection obtains information about the survivors if any, the payment of burial expenses and administration of estate when unknown to the Railroad Retirement Board. The information is used to determine whether and to whom benefits are payable.

**FOR FURTHER INFORMATION CONTACT:** Copies of the forms and supporting documents can be obtained from Chuck Mierzwa, the agency clearance officer (312–751–3363). Comments regarding the information collection should be addressed to Ronald J. Hodapp, Railroad Retirement Board, 844 North Rush Street, Chicago, Illinois, 60611–2092 and the OMB reviewer, Joe Lackey (202–395–7316), Office of Management and Budget, Room 10230, New Executive Office Building, Washington, D.C. 20503.

**Chuck Mierzwa,**

*Clearance Officer.*

[FR Doc. 00–9859 Filed 4–19–00; 8:45 am]

BILLING CODE 7905–01–M

## SECURITIES AND EXCHANGE COMMISSION

**[Release No. 35–27164]**

## Filings Under the Public Utility Holding Company Act of 1935, as Amended (''Act'')

April 14, 2000.

Notice is hereby given that the following filing(s) has/have been made with the Commission pursuant to provisions of the Act and rules promulgated under the Act. All interested persons are referred to the application(s) and/or declaration(s) for complete statements of the proposed transaction(s) summarized below. The application(s) and/or declaration(s) and any amendment(s) is/are available for public inspection through the Commission's Branch of Public Reference.

Interested persons wishing to comment or request a hearing on the application(s) and/or declaration(s) should submit their views in writing by May 9, 2000, to the Secretary, Securities and Exchange Commission, Washington, D.C. 20549–0609, and serve a copy on the relevant applicant(s) and/or declarant(s) at the address(es) specified below. Proof of service (by affidavit or, in the case of an attorney at law, by certificate) should be filed with the request. Any request for hearing should identify specifically the issues of facts or law that are disputed. A person who so requests will be notified of any hearing, if ordered, and will receive a copy of any notice or order issued in the matter. After May 9, 2000, the application(s) and/or declaration(s), as filed or as amended, may be granted and/or permitted to become effective.

### Conectiv, et al. (70–9607)

Conectiv, a registered public utility holding company, and its public-utility subsidiary companies, Atlantic City Electric Company (''ACE'') and Delmarva Power & Light Company (''DPL'', and, together with Conectiv and ACE, ''Applicants''), all located at 800 King Street, Wilmington, Delaware 19899, have filed a declaration under section 12(d) of the Act and rules 44 and 54 under the Act.

The Applicants propose the joint sale by ACE and DPL of a 7.51 percent ownership interest in the Peach Bottom Atomic Power Station Units 2 and 3 (''Peach Bottom''), located in York County, Pennsylvania, the PECO Energy Company (''PECO''), a section 3(a)(2) exempt holding company under the Act. At present, ACE and DPL jointly own a 15.02 percent interest in Peach Bottom. PECO presently owns a 42.49 percent interest in Peach Bottom.

ACE is a New Jersey corporation that distributes and sells electricity at retail in southern New Jersey. DPL is a Delaware and Virginia corporation that distributes and sells electricity at retail in Delaware, Maryland and Virginia, and gas at retail in Delaware.

The proposed sale of ACE's and DPL's interests in Peach Bottom to PECO (the ''Transaction'') is related to several other transactions involving the sale of Applicants' interests in various nuclear assets. In addition to this Transaction, ACE and DPL have agreed to sell all of their remaining ownership interests in several nuclear generating plants, including Peach Bottom, to PSEG Power, L.L.C. (''PSEG Power''), a wholly owned non-utility subsidiary of Public Service Enterprise Group Incorporated (''PSEG''), an exempt public utility holding company under the Act. Public Service Electric & Gas Company (''PSE&G''), a wholly owned public utility subsidiary of PSEG, owns the remaining 42.49 percent interest in Peach Bottom. [1]

According to the terms of the two Purchase Agreements between ACE and PECO and between DPL and PECO, each dated as of September 27, 1999, ACE and DPL will each receive $2,550,000 for their interests in Peach Bottom, and each will also receive 3.755 percent of the net book value of the Nuclear Fuel Supplies [2] that would qualify as ''utility assets'' under the Act as of the anticipated closing date of the Transaction. Applicants state that the sale of these Nuclear Fuel Supplies will result in additional proceeds of approximately $10 million to each of ACE and DPL. Therefore, Applicants estimate that the combined total proceeds to be shared by ACE and DPL from the sale of their interests in Peach Bottom to PECO will be approximately $25.1 million. In addition, PECO will assume essentially all of ACE and DPL's environmental and decommissioning liabilities for Peach Bottom, in proportion to the ownership share being transferred.

The net book value of the Applicants' interests in Peach Bottom totalled $9,394,000 as of December 31, 1999.[3] Applicants state that the prices, terms and conditions of the Transaction were based on those of recent comparable nuclear asset sales. Applicants further state that PECO and PSE&G, as co-owners of 84.98 percent of Peach Bottom, each hold the right of first refusal over any proposed sale of Applicants' interests in Peach Bottom.

ACE, consistent with New Jersey state law, will apply the proceeds it receives from the sale of Peach Bottom to partially offset stranded costs it will recover from its retail customers in New Jersey. DPL will use the proceeds for various activities consistent with its corporate strategy.

### The Southern Company (70–9631)

The Southern Company (''Southern''), a registered holding company, 270 Peachtree Street, N.W., Atlanta, Georgia 30303, and its electric utility subsidiary companies (''Electric Subsidiaries''), Georgia Power Company (''Georgia''), 241 Ralph McGill Boulevard, N.E., Atlanta, Georgia 30308, Gulf Power Company (''Gulf''), One Energy Place, Pensacola, Florida 32520, Mississippi Power Company (''Mississippi''), 2992 West Beach, Gulfport, Mississippi 39501, and Savannah Electric and Power Company (''Savannah'') (collectively, ''Applicants''), 600 Bay Street East, Savannah, Georgia 31401, have filed an application-declaration (''Application-Declaration'') under sections 6(a), 7, 9(a), 10, and 12(b) of the Act and rules 45, 53 and 54 under the Act.

In summary, Applicants, request authority for Southern to organize and acquire all of the outstanding capital stock of a special purpose financing vehicle (''SPV''). Applicants also request authority for the SPV to issue commercial paper for the benefit of the Electric Subsidiaries and other subsidiaries of Southern. In addition, Applicants request authority for each Electric Subsidiary to borrow the proceeds from the sales of commercial paper issued for its benefit. Further,

[1] It is ACE and DPL's understanding that at or before closing, PSEG Power will designate its subsidiary, PSEG Nuclear L.L.C. (''PSEG Nuclear''), as the party that will receive the ownership interests at closing. Applicants state that PSEG Nuclear is an exempt wholesale generator under section 32 of the Act. Under that section, no Commission approval is required for these transactions.

[2] Nuclear Fuel Supplies include the nuclear fuel assemblies in the reactor core, natural uranium, converted uranium, enriched uranium and any other form of uranium, under contract or in inventory, and located at or in transit to the Peach Bottom station, as well as all nuclear fuel constituents in all stages of the fuel cycle that are in the process of production, conversion, enrichment or fabrication.

[3] The net book value of Peach Bottom and other plant-related assets including inventories were written down to their estimated fair market value (net of estimated selling costs) due to impairment. The write-down took place in the third quarter of 1999. The extraordinary charge related to impaired assets was determined in accordance with Statements of Financial Accounting Standards No. 121. The extraordinary charge was decreased by the the regulatory asset established for the amount of stranded costs expected to be recovered through regulated electricity delivery rates.

Applicants request authority for Georgia to guarantee borrowings from the SPV by Southern Electric Generating Company, a wholly owned subsidiary of Georgia and Alabama Power Company, itself an electric public utility subsidiary of Southern.[4]

Applicants propose that the SPV sell the commercial paper directly to or through a dealer or dealers from time to time prior to June 30, 2004 (''Authorization Period'') in an aggregate principal amount at any one time outstanding of up to $3.5 billion. Georgia, Gulf, Mississippi, and Savannah propose to borrow the proceeds of these sales in outstanding amounts that will not during the Authorization Period exceed $1.7 billion, $300 million, $350 million, and $90 million, respectively. The commercial paper notes will be issued in denominations of not less than $50,000 and will not by their terms be prepayable prior to maturity. Maturities will be determined by market conditions, the effective interest costs, and the anticipated cash flows of the particular requesting Electric Subsidiary, including the proceeds of other borrowings, at the time of issuance.

The notes will mature in one year or less, subject to extensions; provided, however, none of the notes will mature in more than 390 days. The discount rate (or the interest rate in the case of interest-bearing notes), including any commissions, will not be in excess of the discount rate per annum (or the equivalent interest rate) prevailing at the date of issuance for commercial paper of comparable quality having the same maturity. The terms of each of these borrowings by an Electric Subsidiary will be identical to those of the related commercial paper issued for its benefit.

It is further proposed that Georgia guarantee loans by the SPV to SEGCO. The aggregate amount of these guarantees will not during the Authorization Period exceed $150 million.

The proceeds from the proposed borrowings by the Electric Subsidiaries and SEGCO will be used for general corporate purposes, including the financing in part of their respective construction programs.

[4] Applicants state that borrowings by Alabama and SEGCO will be exempt from Commission review under rule 52 under the Act.

For the Commission by the Division of Investment Management, under delegated authority.

**Jonathan G. Katz,**

*Secretary.*

[FR Doc. 00–9915 Filed 4–19–00; 8:45 am]

BILLING CODE 8010–01–M

## SECURITIES AND EXCHANGE COMMISSION

**[Investment Company Act Release No. 24392; 812–11958]**

## Nations Fund Trust and Banc of America Advisors, Inc.; Notice of Application

April 13, 2000.

**AGENCY:** Securities and Exchange Commission (''Commission'').

**ACTION:** Notice of an application under section 17(b) of the Investment Company Act of 1940 (the ''Act'') for an exemption from section 17(a) of the Act.

**SUMMARY OF APPLICATION:** Applicants request an order to permit certain series of a registered open-end management investment company to acquire all of the assets and assume all of the liabilities of certain other series of the investment company. Because of certain affiliations, applicants may not rely on rule 17a–8 under the Act.

**APPLICANTS:** Nations Fund Trust (''NFT'') and Banc of America Advisors, Inc. (''BAAI'').

**FILING DATES:** The application was filed on February 1, 2000. Applicants have agreed to file an amendment during the notice period, the substance of which is reflected in this notice.

**HEARING OR NOTIFICATION OF HEARING:** An order granting the application will be issued unless the Commission orders a hearing. Interested persons may request a hearing by writing to the Commission's Secretary and serving applicants with a copy of the request, personally or by mail. Hearing requests should be received by the Commission by 5:30 p.m. on May 8, 2000, and should be accompanied by proof of service on applicants, in the form of an affidavit or, for lawyers, a certificate of service. Hearing requests should state the nature of the writer's interest, the reason for the request, and the issues contested. Persons who wish to be notified of a hearing may request notification by writing to the Commission's Secretary.

**ADDRESSES:** Secretary, Securities and Exchange Commission, 450 Fifth Street, NW, Washington, DC 20549–0609. Applicants, One Bank of America Plaza, 101 South Tryon Street, Charlotte, NC 28255.

**FOR FURTHER INFORMATION CONTACT:** Lawrence W. Pisto, Senior Counsel, at (202) 942–0527, or George J. Zornada, Branch Chief, at (202) 942–0564 (Office of Investment Company Regulation, Division of Investment Management).

**SUPPLEMENTARY INFORMATION:** The following is a summary of the application. The complete application may be obtained for a fee at the Commission's Public Reference Branch, 450 Fifth Street, NW, Washington, DC 20549–0102 (tel. (202) 942–8090).

### Applicants' Representations

1. NFT, a Massachusetts business trust, is registered under the Act as an open-end management investment company. NFT presently offers 36 series, including Nations Managed Value Index Fund and Nations Managed SmallCap Value Index Fund (the ''Acquired Series'') and Nations Managed Index Fund and Nations Small Cap Index Fund (the ''Acquiring Series''). Collectively, the Acquired Series and the Acquiring Series are referred to as the ''Series.'' [1]

2. BAAI is the investment adviser to each of the Series. The adviser is a wholly-owned indirect subsidiary of the Bank of America Corporation and is registered as an investment adviser under the Investment Advisers Act of 1940.

3. Currently, Bank of America Corporation and entities that are under common control with BAAI (the ''Bank of America Group''), hold of record, in their name and in the names of their nominees, more than 5% (and with respect to certain of the Series more than 25%) of the outstanding voting securities of the Series. All of the securities are held for the benefit of others in a fiduciary or representative capacity. None of the Bank of America Group owns an economic interest in any of the Series.

4. On December 9, 1999, the board of trustees of NFT (the ''Board''), including a majority of the trustees who are not ''interested persons'' within the meaning of section 2(a)(19) of the Act (''Disinterested Trustees''), approved an Agreement and Plan of Reorganization (the ''Reorganization Agreement,'' and the transaction the ''Reorganization''). Under the Reorganization Agreement, on the day following the closing date (the ''Closing Date''), which is currently

[1] The Acquired Series and the Acquiring Series correspond with each other as follows: Nations Managed Value Index Fund with Nations Managed Index Fund; and Nations Managed SmallCap Value Index Fund with Nations SmallCap Index Fund.

anticipated to be May 12, 2000, the Acquiring Series will acquire all the assets and liabilities of the corresponding Acquired Series in exchange for shares of the Acquiring Series that have an aggregate net asset value (''NAV'') equal to the aggregate NAV of the Acquired Series determined as of 4 p.m. EST on the Closing Date (''Valuation Time''). The value of assets will be determined in the manner set forth in the Series' then-current prospectus and statement of additional information. On the day following the Closing Date or on such other date as may be mutually agreed, each Acquired Series will make a pro rata distribution of shares of the Acquiring Series to shareholders of the Acquired Series and liquidate.

5. Applicants state that the Acquired Series pursue investment objectives, follow investment strategies and present investments risks that are generally similar to those of the corresponding Acquiring Series. Applicants state that all of the Series offer identical Primary A and Investor A shares.[2] Shareholders of the Acquired Series will not incur any sales charges in connection with the Reorganization. BAAI or another entity in the Bank of America Group will be responsible for the customary expenses of the Reorganization.

6. The Board, including all the Disinterested Trustees, determined that the Reorganization is in the best interests of each of the Acquired Series and each of the Acquiring Series, and that the interests of the shareholders of the Acquired Series and Acquiring Series would not be diluted by the Reorganization. In assessing the Plan, the factors considered by the Board included, among others, (a) the terms and conditions of the Reorganization, (b) the expense ratios, fees and expenses of the Acquired Series compared to the Acquiring Series, (c) the compatibility of investment objectives, (d) the fact that BAAI or an affiliate will bear the expenses incurred in connection with the Reorganization, and (e) the tax-free nature of the Reorganization.

7. The Reorganization Agreement is subject to a number of conditions precedent, including that: (1) The shareholders of the Acquired Series approve the Reorganization Agreement, (b) definitive proxy solicitation materials shall have been filed with the Commission and distributed to shareholders of the Acquired Series, (c) the Acquiring and Acquired Series receive an opinion of tax counsel that the Reorganization will be tax-free for each Series and its shareholders, and (d) applicants receive from the Commission an exemption from section 17(a) of the Act for the Reorganization. The Reorganization Agreement may be terminated and the Reorganization abandoned at any time by consent of the Board; the Board may also terminate the Reorganization Agreement if its conditions are not satisfied. Applicants agree not to make any material changes to the Reorganization Agreement without prior Commission approval.

8. Definitive proxy solicitation materials have been filed with the Commission and were mailed to shareholders of the Acquired Series on February 4, 2000. A special meeting of shareholders is scheduled for April 21, 2000.

**Applicants' Legal Analysis**

1. Section 17(a) of the Act generally prohibits an affiliated person of a registered investment company, or an affiliated person of that person, acting as principal, from selling any security to, or purchasing any security from, the company. Section 2(a)(3) of the Act defines an ''affiliated person'' of another person to include (a) any person that directly or indirectly owns, controls, or holds with power to vote 5% or more of the outstanding voting securities of the other person; (b) any person 5% or more of whose outstanding voting securities are directly or indirectly owned, controlled or held with power to vote by the other person; (c) any person directly or indirectly controlling, controlled by, or under common control with the other person; and (d) if the other person is an investment company, any investment adviser of that company. Applicants state that the Series may be deemed affiliated persons and thus the Reorganization prohibited by section 17(a).

2. Rule 17a–8 under the Act exempts from the prohibitions of section 17(a) mergers, consolidations, or purchases or sales of substantially all of the assets of registered investment companies that are affiliated persons, or affiliated persons of an affiliated person, solely by reason of having a common investment adviser, common directors/trustees, and/or common officers, provided that certain conditions set forth in the rule are satisfied.

3. Applicants state that they may not rely on rule 17a–8 in connection with the Reorganization because each of the Series may be deemed to be affiliated for reasons other than having a common investment adviser, common directors, and/or common officers. Because the Bank of America Group holds of record more than 5% (and in some cases more than 25%) of the outstanding voting securities of each of the Series, each Acquired Series may be deemed an affiliated person of an affiliated person of each Acquiring Series.

4. Section 17(b) of the Act provides that the Commission may exempt a transaction from the provisions of section 17(a) if the evidence establishes that the terms of the proposed transaction, including the consideration to be paid, are reasonable and fair and do not involve overreaching on the part of any person concerned, and that the proposed transaction is consistent with the policy of each registered investment company concerned and with the general purposes of the Act.

5. Applicants submit that the terms of the Reorganization satisfy the standards set forth in section 17(b). Applicants note that the Board, including a majority of the Disinterested Trustees, found that participation in the Reorganization is in the best interests of each Series and that the interests of the existing shareholders of each Series will not be diluted as a result of the Reorganization. Applicants also note that the exchange of the Acquired Series' assets for shares in the Acquiring Series will be based on the Series' relative net asset values.

For the Commission, by the Division of Investment Management, under delegated authority.

**Jonathan G. Katz,**

*Secretary.*

[FR Doc. 00–9877 Filed 4–19–00; 8:45 am]

BILLING CODE 8010–01–M

[2]One of the Acquiring Series, Nations Managed Index Fund, also offers Primary B Shares. Such shares will not be part of the Reorganization.

## SECURITIES AND EXCHANGE COMMISSION

**[Investment Company Act Release No. 24393, 812–11598]**

## Barclays Global Fund Advisors, et al.; Notice of Application

April 17, 2000.

**AGENCY:** Securities and Exchange Commission (''Commission'').

**ACTION:** Notice of an application for an order under section 6(c) of the Investment Company Act of 1940 (''Act'') for an exemption from sections 2(a)(32), 5(a)(1), 22(d), and 22(e) of the Act and rule 22c–1 under the Act, and under sections 6(c) and 17(b) of the Act for an exemption from sections 17(a)(1) and (a)(2) of the Act.

**SUMMARY OF APPLICATION:** Applicants request an order that would permit an open-end management investment company, whose portfolios will consist of the component securities of certain

foreign indices, to issue shares of limited redeemability; permit secondary market transactions in the shares of the portfolios at negotiated prices on the American Stock Exchange LLC (''AMEX''); permit affiliated persons of the portfolios to deposit securities into, and receive securities from, the portfolios in connection with the purchase and redemption of aggregations of the portfolios' shares; and permit certain portfolios to pay redemption proceeds more than seven days after the tender of shares of the portfolios for redemption under certain circumstances.

**APPLICANTS:** Barclay Global Fund Advisors (''Adviser''), iShares Trust (''Fund'') and its current index series (''Initial Index Series'') and future index series (''Future Index Series'', and together with the Initial Index Series, the ''Index Series''), and SEI Investments Distribution Company (''Distributor'').

**FILING DATES.** The application was filed on April 30, 1999. Applicants have agreed to file an amendment during the notice period, the substance of which is reflected in this notice.

**HEARING OR NOTIFICATION OF HEARING.** An order granting the requested relief will be issued unless the Commission orders a hearing. Interested persons may request a hearing by writing to the Commission's Secretary and serving applicants with a copy of the request, personally or by mail. Hearing requests should be received by the Commission by 5:30 p.m. on May 5, 2000 and should be accompanied by proof of service on applicants, in the form of an affidavit or, for lawyers, a certificate of service. Hearing requests should state the nature of the writer's interest, the reason for the request, and the issues contested. Persons may request notification of a hearing by writing to the Commission's Secretary.

**ADDRESSES:** Secretary, Commission, 450 5th Street, NW, Washington, D.C. 20549–0609. Adviser, 45 Fremont Street, San Francisco, CA 94105; Fund, c/o Investors Bank & Trust Company, 200 Clarendon Street, Boston, MA 02116; and Distributor, 1 Freedom Valley Drive, Oaks, PA 19456.

**FOR FURTHER INFORMATION CONTACT:** Anu Dubey, Senior Counsel, at (202) 942–0687, or Michael Mundt, Branch Chief, at (202) 942–0564 (Division of Investment Management, Office of Investment Company Regulation).

**SUPPLEMENTARY INFORMATION:** The following is a summary of the application. The complete application may be obtained for a fee at the Commission's Public Reference Branch, 450 5th Street, NW, Washington, D.C. 20549–0102 (tel. 202–942–8090).

**Applicants' Representations**

1. The Fund is an open-end management investment company registered under the Act and established in the state of Delaware. The Adviser, an investment adviser registered under the Investment Advisers Act of 1940, will serve as investment adviser to the Fund. The Distributor, a broker-dealer unaffiliated with the Adviser and registered under the Securities Exchange Act of 1934 (''Exchange Act''), will serve as the principal underwriter of the Fund's shares on an agency basis.

2. Each Index Series will invest in a portfolio of securities (''Portfolio Securities'') generally consisting of the component securities of a specified foreign securities index (''Subject Index''),[1] There are seven Initial Index Series.[2] No entity that creates, compiles, sponsors or maintains a Subject Index will be an affiliated person, as defined in section 2(a)(3) of the Act, or an affiliated person of an affiliated person of the Fund, the Adviser, any subadviser to an Index Series or the Distributor.

3. The investment objective of each Index Series will be to provide investment results that correspond generally to the price and yield performance of its relevant Subject Index. Intraday values of each Subject Index will be disseminated every 15 seconds throughout the trading day. An Index Series will utilize as an investment approach either a replication strategy or a representative sampling strategy. An Index Series using a replication strategy generally will hold most of the component securities of its Subject Index, but may not hold all of the underlying securities that comprise a Subject Index in certain instances. This may be the case when, for example, a potential component security is illiquid or when there are practical difficulties or substantial costs involved in holding every security in a Subject Index. An Index Series using a representative sampling strategy seeks to hold a representative sample of the component securities of the Subject Index and will invest in some but not all of the component securities of its Subject Index.[3] Applicants anticipate that an Index Series that utilizes the representative sampling technique will not track its Subject Index with the same degree of accuracy as an investment vehicle that invested in every component security of the Subject Index with the same weighting as the Subject Index. Applicants expect that each Index Series will have a tracking error relative to the performance of its respective Subject Index of no more than 5 percent.

4. Shares of an Index Series (''Shares'') will be sold in aggregations of 50,000 Shares (''Creation Units'') as specified in the relevant prospectus. The price of a Creation Unit will range from $1,000,000 to $8,500,000. Creation Units may be purchased only by or through a Depository Trust Company (''DTC'') participant. The DTC participant must enter into a participant agreement with the Distributor (''Authorized Participant''). Creation Units generally will be issued in exchange for an in-kind deposit of securities and cash. The Index Series also may sell Creation Units on a ''cash only'' basis in limited circumstances. An investor wishing to make an in-kind purchase of a Creation Unit from an Index Series will have to transfer to the Fund a ''Portfolio Deposit'' consisting of (i) a portfolio of securities that has been selected by the Adviser to correspond generally to the price and yield performance of the relevant Subject Index (''Deposit Securities''), and (ii) a cash payment or credit to equalize any difference between (a) the total aggregate market value per Creation Unit of the Deposit Securities and (b) the net asset value (''NAV'') per Creation Unit of the Index Series (the ''Balancing Amount'').[4] An investor

[1] At least 90% of each Index Series' assets will be invested in the component securities of its Subject Index. An Index Series may also invest up to 10% of its assets in certain futures, option and swap contracts, cash and cash equivalents, as well as certain securities not included in the Subject Index under limited circumstances.

[2] The Subject Indices for the Initial Index Series are the Standard & Poor's (''S&P'') Europe 350 Index, S&P Euro Index, S&P Global 100 Index, S&P/TSE 60 Index, Dow Jones Global Media Sector Index, Dow Jones Global Pharmaceuticals Sector Index, and Dow Jones Global Telecommunications Sector Index.

[3] The stock selected for inclusion in an Index Series by the Adviser will have aggregate investment characteristics (based on market capitalization and industry weightings), fund characteristics (such as return variability, earnings valuation and yield) and liquidity measures similar to those of the Subject Index taken in its entirety.

[4] On each business day, the Adviser will make available through the Distributor, immediately prior to the opening of trading on the AMEX, the list of the names and the required number of shares of each Deposit Security for each Index Series that offers in-kind purchases of Creation Units. The Portfolio Deposit will be applicable to purchases of Creation Units until a change in the Portfolio Deposit composition is next announced. In addition, each Index Series reserves the right to permit or require the substitution of an amount of cash to be added to the Balancing Amount to replace any Deposit Security that may be unavailable or unavailable in sufficient quantity for delivery to the Fund, or which may be ineligible for trading by an Authorized Participant or the investor

purchasing a Creation Unit from an Index Series will be charged a fee (''Transaction Fee'') to prevent the dilution of the interests of the remaining shareholders resulting from the Index Series incurring costs in connection with the purchase of Creation Units.[5] Each Index Series will disclose the maximum Transaction Fees charged by the Index Series in its prospectus and the method of calculating the Transaction Fees in its statement of additional information (''SAI'').

5. Orders to purchase Creation Units will be placed with the Distributor who will be responsible for transmitting the orders to the Fund. The Distributor will issue confirmations of acceptance, issue delivery instructions to the Fund to implement the delivery of Creation Units, and maintain records of the orders and confirmations. The Distributor also will be responsible for delivering prospectuses to purchasers of Creation Units.

6. Persons purchasing Creation Units from an Index Series may hold the Shares or sell some or all of them in the secondary market. Shares will be listed on the AMEX and traded in the secondary market in the same manner as other equity securities. One or more AMEX specialists will be assigned to make a market in Shares. The price of Shares traded on the AMEX will be based on a current bid/offer market, and each Share is expected to have a market value of between $20 an $170. Transactions involving the sale of Shares in the secondary market will be subject to customary brokerage commissions and charges.

7. Applicants expect that purchasers of Creation Units will include institutional investors and arbitrageurs (which could include institutional investors). The AMEX Specialist, in providing for a fair and orderly secondary market for Shares, also may purchase Shares for use in its market-making activities on the AMEX. Applicants expect that secondary market purchasers of Shares will include both institutional and retail investors.[6] Applicants believe that arbitrageurs and other institutional investors will purchase or redeem Creation Units to take advantage of discrepancies between the Shares' market price and the Shares' underlying NAV. Applicants expect that this arbitrage activity will provide a market ''discipline'' that will result in a close correspondence between the price at which the Shares trade and their NAV. In other words, applicants do not expect the Shares to trade at a significant premium or discount to their NAV.

8. Shares will not be individually redeemable. Shares will only be redeemable in Creation Unit-size aggregations through each Index Series. To redeem, an investor will have to accumulate enough Shares to constitute a Creation Unit. An investor redeeming a Creation Unit generally will receive (i) a portfolio of Portfolio Securities in effect on the date the request for redemption is made (''Redemption Securities''), which may not be identical to the Deposit Securities applicable to the purchase of Creation Units, and (ii) a ''Cash Redemption Payment,'' consisting of an amount calculated in the same manner as the Balancing Amount, although the actual amounts may differ if the Redemption Securities are not identical to the Deposit Securities. An investor may receive the cash equivalent of a Redemption Security in certain circumstances, such as where a redeeming entity is restrained by regulation or policy from transacting in the Redemption Security. An Index Series may redeem Creation Units in cash in limited circumstances, such as when it is not possible to effect deliveries of Redemption Securities in the applicable jurisdiction.[7] A redeeming investor will pay a Transaction Fee to offset the Fund's transaction costs, whether the redemption proceeds are in-kind or cash. An additional variable charge, expressed as a percentage of the redemption proceeds, will be made for cash redemptions.

9. Because each Index Series will redeem Creation Units in-kind, an Index Series will not have to maintain cash reserves for redemptions. This will allow the assets of each Index Series to be committed as fully as possible to tracking its Subject Index. Accordingly, applicants state that each Index Series will be able to track its Subject Index more closely than certain other investment products that must allocate a greater portion of their assets for cash redemptions.

10. Applicants state that neither the Fund nor any Index Series will be marketed or otherwise held out as an ''open-end investment company'' or a ''mutual fund.'' Rather, the designation of the Fund and the Index Series in all marketing materials will be limited to the terms ''exchange-traded fund,'' ''investment company,'' ''fund,'' or ''trust'' without reference to an ''open-end fund'' or ''mutual fund,'' except to contrast the Fund and the Index Series with a conventional open-end investment company. Any marketing materials that describe the purchase or sale of Creation Units, or refer to redeemability, will prominently disclose that Shares are not individually redeemable and that owners of Shares may tender Shares for redemption to the Fund in Creation Unit aggregations only. The same type of disclosure will be provided in each Index Series' prospectus, SAI, and all reports to shareholders.[8] The Fund will provide copies of its annual and semi-annual shareholder reports to DTC participants for distribution to beneficial holders of Shares.

## Applicants' Legal Analysis

1. Applicants request an order under section 6(c) of the Act granting an exemption from sections 2(a)(32), 5(a)(1), 22(d), and 22(e) of the Act and rule 22c–1 under the Act; and under sections 6(c) and 17(b) of the Act granting an exemption from sections 17(a)(1) and (a)(2) of the Act. Applicants

on whose behalf the Authorized Participant is acting. In addition, the AMEX will disseminate every 15 seconds throughout the trading day, via the facilities of the Consolidated Tape Association, an amount representing on a per Share basis, the sum of the Balancing Amount effective through and including the prior business day, plus the current value of the Deposit Securities.

[5] In situations where an Index Series permits a purchaser to substitute cash for Deposit Securities, the purchaser may be assessed an additional fee to offset the Fund's brokerage and other transaction costs associated with using cash to purchase the requisite Deposit Securities.

[6] Shares will be registered in book-entry form only. DTC or its nominee will be the registered owner of all outstanding Shares. Records reflecting the beneficial owners of Shares will be maintained by DTC or its participants.

[7] Applicants note that certain holders of Shares of a particular Subject Index may be subject to unfavorable tax treatment if they are entitled to receive in-kind redemption proceeds. The Fund may adopt a policy with respect to such Index Series that such holders of Shares may redeem Creation Unit Aggregations solely for cash.

[8] Applicants state that persons purchasing Creation Units will be cautioned in the prospectus or SAI that some activities on their part may, depending on the circumstances, result in their being deemed statutory underwriters and subject them to the prospectus delivery and liability provisions of the Securities Act of 1933 (''Securities Act''). For example, a broker-dealer firm or its client may be deemed a statutory underwriter if it takes Creation Units after placing an order with the Distributor, breaks them down into the constituent Shares, and sells Shares directly to its customers; or if it chooses to couple the creation of a supply of new Shares with an active selling effort involving solicitation of secondary market demand for Shares. The prospectus or SAI will state that whether a person is an underwriter depends upon all the facts and circumstances pertaining to that person's activities. The prospectus or SAI also will state that broker-dealer firms should also note that dealers who are not ''underwriters'' but are participating in a distribution (as contrasted to ordinary secondary trading transactions), and thus dealing with Shares that are part of an ''unsold allotment'' within the meaning of section 4(3)(C) of the Securities Act, would be unable to take advantage of the prospectus delivery exemption provided by section 4(3) of the Securities Act.

request relief for the Initial Index Series as well as Future Index Series. Any Future Index Series relying on any order granted pursuant to this application will comply with the terms and conditions in the application.

2. Section 6(c) of the Act provides that the Commission may exempt any person, security, or transaction, or any class of persons, securities, or transactions, if and to the extent that such exemption is necessary or appropriate in the public interest and consistent with the protection of investors and the purposes fairly intended by the policy and provisions of the Act.

*Sections 5(a)(1) and 2(a)(32) of the Act*

3. Section 5(a)(1) of the Act defines an ''open-end company'' as a management investment company that is offering for sale or has outstanding any redeemable security of which it is the issuer. Section 2(a)(32) of the Act defines a redeemable security as any security, other than short-term paper, under the terms of which the holder, upon its presentation to the issuer, is entitled to receive approximately his proportionate share of the issuer's current net assets, or the cash equivalent. Because Shares will not be individually redeemable, applicants request an order under section 6(c) of the Act that would permit the Fund to register and operate as an open-end management investment company and issue Shares that are redeemable in Creation Units. Applicants state that investors may purchase Shares in Creation Units from each index Series and redeem Creation Units through each Index Series. Applicants further state that because the market price of Creation Units will be disciplined by arbitrage opportunities, investors generally should be able to sell Shares in the secondary market at approximately their NAV.

*Section 22(d) of the Act and Rule 22c–1 Under the Act*

4. Section 22(d) of the Act, among other things, prohibits a dealer from selling a redeemable security that is being currently offered to the public by or through an underwriter, except at a current public offering price described in the prospectus. Rule 22c–1 under the Act generally requires that a dealer selling, redeeming, or repurchasing a redeemable security do so only at a price based on its NAV. Applicants state that secondary market trading in Shares will take place at negotiated prices, not at a current offering price described in the prospectus, and not at a price based on NAV. Thus, purchases and sales of Shares in the secondary market will not comply with section 22(d) and rule 22c–1. Applicants request an exemption under section 6(c) of the Act from these provisions.

5. Applicants assert that the concerns sought to be addressed by section 22(d) of the Act and rule 22c–1 under the Act with respect to pricing are equally satisfied by the proposed method of pricing Shares. Applicants maintain that while there is little legislative history regarding section 22(d), its provisions, as well as those of rule 22c–1, appear to have been designed to (i) prevent dilution caused by certain riskless-trading schemes by principal underwriters and contract dealers, (ii) prevent unjust discrimination or preferential treatment among buyers resulting from sales at different prices, and (iii) assure an orderly distribution of investment company shares by eliminating price competition from dealers offering shares at less than the published sales price and repurchasing shares at more than the published redemption price.

6. Applicants believe that none of these purposes will be thwarted by permitting Shares to trade in the secondary market at negotiated prices. Applicants state (i) that secondary market trading in Shares would not cause dilution for owners of Shares because such transactions do not directly involve Index Series assets, and (ii) to the extent different prices exist during a given trading day, or from day to day, these variances will occur as a result of third-party market forces, such as supply and demand. Therefore, applicants assert that secondary market transactions in Shares will not lead to discrimination or preferential treatment among purchasers. Finally, applicants contend that the proposed distribution system will be orderly because arbitrage activity will ensure that the difference between the market price of Shares and their NAV remains narrow.

*Section 22(e) of the Act*

7. Section 22(e) of the Act generally prohibits a registered investment company from suspending the right of redemption or postponing the date of payment of redemption proceeds for more than seven days after the tender of a security for redemption. Applicants state that local market delivery cycles for transferring Redemption Securities to redeeming investors, together with local market holiday schedules, will require a delivery process in excess of seven calendar days for some Index Series in certain circumstances during the calendar year. Applicants request relief under section 6(c) from section 22(e) so that certain of the Index Series may pay redemption proceeds up to twelve calendar days after the tender of Shares for redemption.[9] Except as otherwise subsequently disclosed in the prospectus or SAI for the relevant Index Series, applicants expect, however, that these Index Series will be able to deliver redemption proceeds within seven days at all other times.[10] With respect to Future Index Series, applicants seek the same relief from section 22(e) only to the extent that circumstances exist similar to those described herein.

8. The principal reasons for the requested exemption is that settlement of redemptions for the Index Series is contingent not only on the settlement cycle of the United States market but also on the currently practicable delivery cycles in the local markets for the underlying foreign securities of each Index Series. Applicants believe that the Fund will be able to comply with the delivery requirements of section 22(e) except where the holiday schedule applicable to the specific foreign market will not permit delivery of redemption proceeds within seven calendar days.

9. Applicants state that section 22(e) of the Act was designed to prevent unreasonable, undisclosed, and unforeseen delays in the payment of redemption proceeds. Applicants assert that their requested relief will not lead to the problems section 22(e) was designed to prevent. Delays in the payment of Shares redemption proceeds will occur principally due to local holidays. Applicants state that the SAI will disclose those local holidays (over the period of at least one year following the date of the SAI), if any, that are expected to prevent the delivery of redemption proceeds in seven calendar days and the maximum number of days needed to deliver the proceeds for each Index Series. Applicants state that the local holidays relevant to each Index Series as in effect in a given year will be listed in the series' prospectus or SAI or both, and these disclosure documents will identify instances in such year when, due to such holidays, more than

[9] Specifically, applicants request that the (i) S&P Euro Index Series, S&P Europe 350 Index Series and S&P Global 100 Index Series be permitted to make redemption payments up to ten calendar days after the tender of a Creation Unit for redemption, and (ii) Dow Jones Global Media Sector Index Series, Dow Jones Global Phamaceuticals Sector Index Series and Dow Jones Global Telecommunications Sector Index Series be permitted to make redemption payments up to twelve calendar days after the tender of a Creation Unit for redemption.

[10] Applicants acknowledge that no relief obtained from the requirements of section 22(e) will affect any obligations applicants may otherwise have under rule 15c–1 under the Exchange Act. Rule 15c6–1 requires that most securities transactions be settled within three business days of the trade date. Release No. IC–23860, 1999 WL 3621843 (S.E.C.).

seven days will be needed to deliver redemption proceeds.

*Section 17(a) of the Act*

10. Section 17(a) of the Act generally prohibits an affiliated person of a registered investment company, or an affiliated person of such person, from selling any security to or purchasing any security from the company. Because purchases and redemptions of Creation Units may be ''in kind'' rather than cash transactions, section 17() may prohibit affiliated persons of an Index Series from purchasing or redeeming Creation Units in-kind. Because the definition of ''affiliated person'' of another person in section 2(a)(3)(A) of the Act includes any person owning five percent or more of an issuer's outstanding voting securities, every purchaser of a Creation Unit will be affiliated with the Index Series so long as fewer than twenty Creation Units are in existence. In addition, any person owning more than 25% of the Shares of an Index Series may be deemed an affiliated person under section 2(a)(3)(C) of the Act. Applicants request an exemption from section 17(a) under sections 6(c) and 17(b), to permit these affiliated persons of the Index Series to purchase and redeem Creation Units.

11. Section 17(b) authorizes the Commission to exempt a proposed transaction from section 17(a) if evidence establishes that the terms of the transaction, including the consideration to be paid or received, are reasonable and fair and do not involve overreaching, and the proposed transaction is consistent with the policies of the registered investment company and the general provisions of the Act. Applicants contend that no useful purpose would be served by prohibiting persons with the types of affiliations described above from purchasing or redeeming Creation Units. The deposit procedure for in-kind purchases and redemptions will be the same for all purchases and redemptions, and Deposit Securities and Redemption Securities will be valued under the same objective standards applied to valuing Portfolio Securities. Therefore, applicants state that in-kind purchases and redemptions will afford no opportunity for an affiliated person of an Index Series to effect a transaction detrimental to the other holders of Shares. Applicants also believe that in-kind purchases and redemptions will not result in abusive self-dealing or overreaching by affiliated persons of the Index Series.

**Applicants' Conditions**

Applicants agree that the order granting the requested relief will be subject to the following conditions:

1. Applicants will not register a Future Index Series of the Fund by means of filing a post-effective amendment to the Fund's registration statement or by any other means, unless (i) applicants have requested and received with respect to such Future Index Series, either exemptive relief from the Commission or a no-action letter from the Division of Investment Management of the Commission or (ii) the Future Index Series will be listed on a national securities exchange without the need for a filing pursuant to rule 19b–4 under the Exchange Act.

2. Each Index Series' prospectus will clearly disclose that, for purposes of the Act, Shares are issued by the Index Series and that the acquisition of Shares by investment companies is subject to the restrictions of section 12(d)(1) of the Act.

3. As long as the Fund operates in reliance on the requested order, the Shares will be listed on a national securities exchange.

4. Neither the Fund nor any Index Series will be advertised or marketed as an open-end fund or mutual fund. Each Index Series' prospectus will prominently disclose that Shares are not individually redeemable shares and will disclose that the owners of Shares may acquire those Shares from the Index Series and tender those shares for redemption to the Index Series in Creation Units only. Any advertising material that describes the purchase or sale of Creation Units or refers to redeemability will prominently disclose that Shares are not individually redeemable and that owners of Shares may acquire those Shares from the Index Series and tender those Shares for redemption to the Index Series in Creation Units only.

For the Commission, by the Division of Investment Management, under delegated authority.

**Margaret H. McFarland,**

*Deputy Secretary.*

[FR Doc. 00–9938 Filed 4–19–00; 8:45 am]

BILLING CODE 8010–01–M

## SECURITIES AND EXCHANGE COMMISSION

**[Investment Company Act Release No. 24394, 812–11600]**

## Barclays Global Fund Advisors, et al.; Notice of Application

April 17, 2000.

**AGENCY:** Securities and Exchange Commission (''Commission'').

**ACTION:** Notice of an application for an order under section 6(c) of the Investment Company Act of 1940 (''Act'') for an exemption from sections 2(a)(32), 5(a)(1), and 22(d) of the Act and rule 22c–1 under the Act, and under sections 6(c) and 17(b) of the Act for an exemption from sections 17(a)(1) and (a)(2) of the Act.

**SUMMARY OF APPLICATION:** Applicants request an order that would permit an open-end management investment company, whose portfolios will consist of the component securities of certain domestic indices, to issue shares of limited redeemability; permit secondary market transactions in the shares of the portfolios at negotiated prices on the American Stock Exchange LLC (''AMEX''); and permit affiliated persons of the portfolios to deposit securities into, and receive securities from, the portfolios in connection with the purchase and redemption of aggregations of the portfolios' shares.

**APPLICANTS:** Barclays Global Fund Advisors (''Adviser''), iShares Trust (''Fund'') and its current index series (''Initial Index Series'') and future index series (''Future Index Series,'' and together with the Initial Index Series, the ''Index Series''), and SEI Investments Distribution Company (''Distributor'').

**FILING DATES:** The application was filed on April 30, 1999. Applicants have agreed to file an amendment during the notice period, the substance of which is reflected in this notice.

**HEARING OR NOTIFICATION OF HEARING:** An order granting the requested relief will be issued unless the Commission orders a hearing. Interested persons may request a hearing by writing to the Commission's Secretary and serving applicants with a copy of the request, personally or by mail. Hearing requests should be received by the Commission by 5:30 p.m. on May 5, 2000 and should be accompanied by proof of service on applicants, in the form of an affidavit or, for lawyers, a certificate of service. Hearing requests should state the nature of the writer's interest, the reason for the request, and the issues contested. Persons may request notification of a

hearing by writing to the Commission's Secretary.

**ADDRESSES:** Secretary, Commission, 450 5th Street, NW, Washington, D.C. 20549–0609. Adviser, 45 Fremont Street, San Francisco, CA 94105; Fund, c/o Investors Bank & Trust Company, 200 Clarendon Street, Boston, MA 02116; and Distributor, 1 Freedom Valley Drive, Oaks, PA 19456.

**FOR FURTHER INFORMATION CONTACT:** Anu Dubey, Senior Counsel, at (202) 942–0687, or Michael Mundt, Branch Chief, at (202) 942–0564 (Division of Investment Management, Office of Investment Company Regulation).

**SUPPLEMENTARY INFORMATION:** The following is a summary of the application. The complete application may be obtained for a fee at the Commission's Public Reference Branch, 450 5th Street, NW, Washington, D.C. 20549–0102 (tel. 202–942–8090).

## Applicants' Representations

1. The Fund is an open-end management investment company registered under the Act and established in the state of Delaware. The Adviser, an investment adviser registered under the Investment Advisers Act of 1940, will serve as investment adviser to the Fund. The Distributor, a broker-dealer unaffiliated with the Adviser and registered under the Securities Exchange Act of 1934 (''Exchange Act''), will serve as the principal underwriter of the Fund's shares on an agency basis.

Each Index Series will invest in a portfolio of securities (''Portfolio Securities'') generally consisting of the component securities of a specified domestic securities index (''Subject Index'').[1] There are 42 Initial Index Series.[2] No entity that creates, compiles, sponsors, or maintains a Subject Index will be an affiliated person, as defined in section 2(a)(3) of the Act, or an affiliated person of an affiliated person of the Fund, Adviser, any subadviser to an Index Series, or the Distributor.

3. The investment objective of each Index Series will be to provide investment results that correspond generally to the price and yield performance of its relevant Subject Index. Intra-day values of each Subject Index will be disseminated every 15 seconds throughout the trading day. An Index Series will utilize as an investment approach either a replication strategy or a representative sampling strategy. An Index Series using a replication strategy generally will hold most of the component securities of its Subject Index, but may not hold all of the underlying securities that comprise a Subject Index in certain instances. This may be the case when, for example, a potential component security is illiquid or when there are practical difficulties or substantial costs involved in holding every security in a Subject Index. An Index Series using a representative sampling strategy seeks to hold a representative sample of the component securities of the Subject Index and will invest in some but not all of the component securities of its Subject Index.[3] Applicants anticipate that an Index Series that utilizes the representative sampling technique will not track its Subject Index with the same degree of accuracy as an investment vehicle that invested in every component security of the Subject Index with the same weighting as the Subject Index. Applicants expect that each Index Series will have a tracking error relative to the performance of its respective Subject Index of no more than 5 percent.

4. Shares of an Index Series (''Shares'' will be sold in aggregations of 50,000 Shares (''Creation Units'') as specified in the relevant prospectus. The price of a Creation Unit will range from $1,000,000 to $8,500,000. Creation Units may be purchased only by or through a participation in the Continuous Net Settlement (''CNS'') System of the National Securities Clearing Corporation (''NSCC'') (such process, the ''Shares Clearing Process''), or a Depository Trust Company (''DTC'') participant. In either case, the participant must enter into a participant agreement with the Distributor. Creation Units generally will be issued in exchange for an in-kind deposit of securities and cash. The Index Series also may sell Creation Units on a ''cash only'' basis in limited circumstances. An investor wishing to make an in-kind purchase of a Creation Unit from an Index Series will have to transfer to the Fund a ''Portfolio Deposit'' consisting of (i) a portfolio of securities that has been selected by the Adviser to correspond generally to the price and yield performance of the relevant Subject Index (''Deposit Securities''), and (ii) a cash payment to equalize any difference between (a) the total aggregate market value per Creation Unit of the Deposit Securities and (b) the net asset value (''NAV'') per Creation Unit of the Index Series (the ''Balancing Amount'').[4] An investor purchasing a Creation Unit from an Index Series will be charged a fee (''Transaction Fee'') to prevent the dilution of the interests of the remaining shareholders resulting from the Index Series incurring costs in connection with the purchase of the Creation Units.[5] Each Index Series will disclose

[1] At least 90% of each Index Series' assets will be invested in the component securities of its Subject Index. An Index Series may invest up to 10% of its assets in certain futures, option and swap contracts, cash and cash equivalents, as well as certain securities not included in the Subject Index under limited circumstances.

[2] The Subject Indices for the Initial Index Series are the Standard & Poor's (''S&P'') 500 Index; S&P 100 Index; S&P MidCap 400 Index; S&P SmallCap 600 Index; S&P Super Composite 1500 Index; S&P 500/BARRA Value Index; S&P 500/BARRA Growth Index; S&P MidCap 400/BARRA Value Index; S&P MidCap 400/BARRA Growth Index; S&P SmallCap 600/BARRA Value Index; S&P SmallCap 600/BARRA Growth Index; S&P Super Composite 1500/BARRA Value Index; S&P Super Composite 1500/BARRA Growth Index; Dow Jones US Total Market Index; Dow Jones US SmallCap Index; Dow Jones US Mid-Cap Index; Dow Jones US Large-Cap Index; Dow Jones US Basic Materials Sector Index; Dow Jones US Consumer Cyclical Sector Index; Dow Jones US Consumer Non-Cyclical Sector Index; Dow Jones US Energy Sector Index; Dow Jones US Financial Sector Index; Dow Jones US Industrial Sector Index; Dow Jones US Technology Sector Index; Dow Jones US Utilities Sector index; Dow Jones US Telecommunications Sector Index; Dow Jones Internet Index; Dow Jones US Healthcare Sector Index; Dow Jones US Real Estate Index; Dow Jones US Financial Services Composite Index; Dow Jones US Chemicals Index; Russell 1000 Index; Russell 2000 Index; Russell Top 200 Index; Russell MidCap Index; Russell 3000 Index; Russell 3000 Growth Index; Russell 3000 Value Index; Russell 1000 Growth Index; Russell 1000 Value Index; Russell 2000 Growth Index; and Russell 2000 Value Index.

[3] The stocks selected for inclusion in an Index Series by the Adviser will have aggregate investment characteristics (based on market capitalization and industry weightings), fund characteristics (such as return variability, earnings valuation and yield) and liquidity measures similar to those of the Subject index taken in its entirety.

[4] On each business day, the Advisor will make available through NSCC, immediately prior to the opening of trading on the AMEX, the list of names and the required number of shares of each Deposit Security for each Index Series. The Portfolio Deposit will be applicable to purchases of Creation Units until the Portfolio Deposit composition is next announced. In addition, each Index Series reserves the right to permit or require the substitution of an amount of cash to be added to the Balancing Amount to replace any Deposit Security that may be unavailable or unavailable in sufficient quantity for delivery to the Fund upon the purchase of a Creation Unit, or which may be ineligible for transfer through the Shares Clearing Process or ineligible for trading by an NSCC participant or a DTC participant or the investor on whose behalf the participant is acting. In addition, the AMEX will disseminate every 15 seconds throughout the trading day via the facilities of the Consolidated Tape Association an amount representing on a per Share basis the sum of the Balancing Amount effective through and including the prior business day, plus the current value of the Deposit Securities.

[5] In situations where an Index Series permits a purchaser to substitute cash for Deposit Securities, the purchaser may be assessed an additional fee to offset the Fund's brokerage and other transaction costs associated with using cash to purchase the requisite Deposit Securities. Brokerage commissions incurred by an Index Series in connection with the acquisition of any Deposit Securities ineligible for transfer through the systems of DTC and therefore ineligible for transfer through the Shares Clearing Process will be charged to the Index Series and will

the maximum Transaction Fees charged by the Index Series in its prospectus and the method of calculating the Transaction Fees in its statement of additional information (''SAI'').

5. Orders to purchase Creation Units will be placed with the Distributor who will be responsible for transmitting the orders to the Fund. The Distributor will issue confirmations of acceptance, issue delivery instructions to the Fund to implement the delivery of Creation Units, and maintain records of the orders and confirmations. The Distributor also will be responsible for delivering prospectuses to purchasers of Creation Units.

6. Persons purchasing Creation Units from an Index Series may hold the Shares or sell some or all of them in the secondary market. Shares will be listed on the AMEX and traded in the secondary market in the same manner or other equity securities. One or more AMEX specialists will be assigned to make a market in Shares. The price of Shares traded on the AMEX will be based on a current bid/offer market, and each Share is expected to have a market value of between $20 and $170. Transactions involving the sale of Shares in the secondary market will be subject to customary brokerage commissions and charges.

7. Applicants expect that purchasers of Creation Units will include institutional investors and arbitrageurs (which could include institutional investors). The AMEX Specialist, in providing for a fair and orderly secondary market for Shares, also may purchase Shares for use in its market-making activities on the AMEX. Applicants expect that secondary market purchasers of Shares will include both institutional and retail investors.[6] Applicants believe that arbitrageurs and other institutional investors will purchase or redeem Creation Units to take advantage of discrepancies between Shares' market price and the Shares' underlying NAV. Applicants expect that this arbitrage activity will provide a market ''discipline'' that will result in a close correspondence between the price at which the Shares trade and their NAV. In other words, applicants do not expect the Shares to trade a significant premium or discount to their NAV.

8. Shares will not be individually redeemable. Shares will only be redeemable in Creation Unit-size aggregations through each Index Series.[7] To redeem, an investor will have to accumulate enough Shares to constitute a Creation Unit. An investor redeeming a Creation Unit generally will receive (i) a portfolio of Portfolio Securities in effect on the date the request for redemption is made (''Redemption Securities''), which may not be identical to the Deposit Securities applicable to the purchase of Creation Units, and (ii) a ''Cash Redemption Payment,'' consisting of an amount calculated in the same manner as the Balancing Amount, although the actual amounts may differ if the Redemption Securities are not identical to the Deposit Securities on the same day. An investor also may receive the cash equivalent of a Redemption Security in unusual circumstances, such as a case in which the investor is constrained from effecting transactions in the Portfolio Security by regulation or policy. A redeeming investor will pay a Transaction Fee to offset the Fund's transaction costs, whether the redemption proceeds are in-kind or cash.

9. Because each Index Series will redeem Creation Unites in-kind, an Index Series will not have to maintain cash reserves for redemptions. This will allow the assets of each Index Series to be committed as fully as possible to tracking its Subject Index. Accordingly, applicants state that each Index Series will be able to track its Subject Index more closely than certain other investment products that must allocate a greater portion of their assets for cash redemptions.

10. Applicants state that neither the Fund nor any Index Series will be marketed or otherwise held out as an ''open-end investment company'' or a ''mutual fund.'' Rather, the designation of the Fund and the Index Series in all marketing materials will be limited to the terms ''exchange-traded fund,'' ''investment company,'' ''fund'' or ''trust'' without reference to an ''open-end fund'' or ''mutual fund,'' except to contrast the Fund and the Index Series with a conventional open-end management investment company. Any marketing materials that describe the purchase or sale of Creation Units, or refer to redeemability, will prominently disclose that shares are not individually redeemable and that owners of Shares may tender Shares for redemption to the Fund in Creation Unit aggregations only. The same type of disclosure will be provided in each Index Series' prospectus, SAI and all reports to shareholders.[8] The Fund will provide copies of its annual and semi-annual shareholder reports to DTC participants for distribution to beneficial holders of Shares.

**Applicants' Legal Analysis**

1. Applicants request an order under section 6(c) of the Act granting an exemption from sections 2(a)(32), 5(a)(1), and 22(d) of the Act and rule 22c–1 under the Act; and under sections 6(c) and 17(b) of the Act granting an exemption from sections 17(a)(1) and (a)(2) of the Act. Applicants request relief for the Initial Index Series as well as Future Index Series. Any Future Index Series relying on any order granted pursuant to this application will comply with the terms and conditions stated in this application.

2. Section 6(c) of the Act provides that the Commission may exempt any person, security, or transaction, or any class of persons, securities, or transactions, if and to the extent that such exemption is necessary or appropriate in the public interest and consistent with the protection of investors and the purposes fairly intended by the policy and provisions of the Act.

*Sections 5(a)(1) and 2(a)(32) of the Act*

3. Section 5(a)(1) of the Act defines an ''open-end company'' as a management investment company that is offering for sale or has outstanding any redeemable security of which it is the issuer. Section 2(a)(32) of the Act defines a redeemable security as any security, other than short-term paper, under the terms of which the holder, upon its

affect the value of all Shares of the Fund, unless the Adviser adjusts the Transaction Fee.

[6] Shares will be registered in book-entry form only. DTC or its nominee will be the registered owner of all outstanding Shares. Records reflecting the beneficial owners of Shares will be maintained by DTC or its participants.

[7] Creation Unites may be redeemed through either NSCC or DTC. Investors who redeem through DTC will pay a higher Transaction Fee.

[8] Applicants state that persons purchasing Creation Units will be cautioned in the prospectus or SAI that some activities on their part may, depending on the circumstances, result in their being deemed statutory underwriters and subject them to the prospectus delivery and liability provisions of the Securities Act of 1933 (''Securities Act''). For example, a broker-dealer firm or its client may be deemed a statutory underwriter if it takes Creation Units after placing an order with the Distributor, breaks them down into the constituent Shares, and sells Shares directly to its customers; or if it chooses to couple the purchase of a supply of new Shares with an active selling effort involving solicitation of secondary market demand for Shares. The prospectus or SAI will state that whether a person is an underwriter depends upon all the facts and circumstances pertaining to that person's activities. The prospectus or SAI also will state that broker-dealer firms should also note that dealers who are not ''underwriters'' but are participating in a distribution (as contrasted to ordinary secondary trading transactions), and thus dealing with Shares that are part of an ''unsold allotment'' within the meaning of section 4(3)(C) of the Securities Act, would be unable to take advantage of the prospectus delivery exemption provided by section 4(3) of the Securities Act.

presentation to the issuer, is entitled to receive approximately his proportionate share of the issuer's current net assets, or the cash equivalent. Because Shares will not be individually redeemable, applicants request an order under section 6(c) of the Act that would permit the Fund to register and operate as an open-end management investment company and issue Shares that are redeemable in Creation Units. Applicants state that investors may purchase Shares in Creation Units from each Index Series and redeem Creation Units through each Index Series. Applicants further state that because the market price of Creation Units will be disciplined by arbitrage opportunities, investors generally should be able to sell Shares in the secondary market at approximately their NAV.

*Section 22(d) of the Act and Rule 22c–1 Under the Act*

4. Section 22(d) of the Act, among other things, prohibits a dealer from selling a redeemable security that is being currently offered to the public by or through an underwriter, except at a current public offering price described in the prospectus. Rule 22c–1 under the Act generally requires that a dealer selling, redeeming, or repurchasing a redeemable security do so only at a price based on its NAV. Applicants state that secondary market trading in Shares will take place at negotiated prices, not at a current offering price described in the prospectus, and not at a price based on NAV. Thus, purchases, and sales of Shares in the secondary market will not comply with section 22(d) and rule 22c–1. Applicants request an exemption under section 6(c) of the Act from these provisions.

5. Applicants assert that the concerns sought to be addressed by section 22(d) of the Act and rule 22c–1 under the Act with respect to pricing are equally satisfied by the proposed method of pricing Shares. Applicants maintain that while there is little legislative history regarding section 22(d), its provisions, as well as those of rule 22c–1, appear to have been designed to (i) prevent dilution caused by certain riskless-trading schemes by principal underwriters and contract dealers, (ii) prevent unjust discrimination or preferential treatment among buyers resulting from sales at different prices, and (iii) assure an orderly distribution of investment company shares by eliminating price competition from dealers offering shares at less than the published sales price and repurchasing shares at more than the published redemption price.

6. Applicants believe that none of these purposes will be thwarted by permitting Shares to trade in the secondary market at negotiated prices. Applicants state (i) that secondary market trading in Shares would not cause dilution for owners of Shares because such transactions do not directly involved Index Series assets, and (ii) to the extent different prices exist during a given trading day, or from day to day, these variances will occur as a result of third-party market forces, such as supply and demand. Therefore, applicants assert that secondary market transactions in Shares will not lead to discrimination or preferential treatment among purchasers. Finally, applicants contend that the proposed distribution system will be orderly because arbitrage activity will ensure that the difference between the market price of Shares and their NAV remains narrow.

*Section 17(a) of the Act*

7. Section 17(a) of the Act generally prohibits an affiliated person of a registered investment company, or an affiliated person of such person, from selling any security to or purchasing any security from the company. Because purchases and redemptions of Creation Units may be ''in-kind'' rather than cash transactions, section 17(a) may prohibit affiliated persons of an Index Series from purchasing or redeeming Creation Units. Because the definition of ''affiliated person'' of another person in section 2(a)(3)(A) of the Act includes any person owning five percent or more of an issuer's outstanding voting securities, every purchaser of a Creation Unit will be affiliated with the Index Series so long as fewer than twenty Creation Units are in existence. In addition, any person owning more than 25% of the Shares of an Index Series may be deemed an affiliated person under section 2(a)(3)(C) of the Act. Applicants request an exemption from section 17(a) under sections 6(c) and 17(b), to permit these affiliated persons of the Index Series to purchase and redeem Creation Units.

8. Section 17(b) authorizes the Commission to exempt a proposed transaction from section 17(a) if evidence establishes that the terms of the transaction, including the consideration to be paid or received, are reasonable and fair and do not involve overreaching, and the proposed transaction is consistent with the policies of the registered investment company and the general provisions of the Act. Applicants contend that no useful purpose would be served by prohibiting persons with the types of affiliations described above from purchasing or redeeming Creation Units. The deposit procedure for in-kind purchases and redemption procedures for in-kind redemptions will be the same for all purchases and redemptions, and Deposit Securities and Redemption Securities will be valued under the same objective standards applied to valuing the Portfolio Securities. Therefore, applicants state that in-kind purchases and redemptions will afford no opportunity for an affiliated person of an Index Series to effect a transaction detrimental to the other holders of Shares. Applicants also believe that in-kind purchases and redemptions will not result in abusive self-dealing or overreaching by affiliated persons of the Index Series.

**Applicants' Conditions**

Applicants agree that the order granting the requested relief will be subject to the following conditions:

1. Applicants will not register a Future Index Series by means of filing a post-effective amendment to the Fund's registration statement or by any other means, unless (i) applicants have requested and received with respect to such Future Index Series, either exemptive relief from the Commission or a no-action letter from the Division of Investment Management of the Commission, or (ii) the Future Index Series will be listed on a national securities exchange without the need for a filing pursuant to rule 19b–4 under the Exchange Act.

2. Each Index Series' prospectus will clearly disclose that, for purposes of the Act, Shares are issued by the Index Series and that the acquisition of Shares by investment companies is subject to the restrictions of section 12(d)(1) of the Act.

3. As long as the Fund operates in reliance on the requested order, the Shares will be listed on a national securities exchange.

4. Neither the Fund nor any Index Series will be advertised or marketed as an open-end fund or mutual fund. Each Index Series' prospectus will prominently disclose that Shares are not individually redeemable shares and will disclose that the owners of Shares may acquire those Shares from the Index Series and tender those Shares for redemption to the Index Series in Creation Units only. Any advertising material that describes the purchase or sale of Creation Units or refers to redeemability will prominently disclose that Shares are not individually redeemable and that owners of Shares may acquire those Shares from the Index Series and tender those Shares for

redemption to the Index Series in Creation Units only.

For the Commission, by the Division of Investment Management, under delegated authority.

**Margaret H. McFarland,**

*Deputy Secretary.*

[FR Doc. 00–9939 Filed 4–19–00; 8:45 am]

BILLING CODE 8010–01–M

## SECURITIES AND EXCHANGE COMMISSION

**[Release No. 34–42675; File No. SR–Amex–00–15]**

## Self-Regulatory Organizations; Notice of Filing and Immediate Effectiveness of Proposed Rule Change by the American Stock Exchange LLC Relating to Transaction, Clearance, and Floor Brokerage Fees

April 13, 2000.

Pursuant to Section 19(b)(1) of the Securities Exchange Act of 1934 (''Act''),[1] and Rule 19b–4 thereunder,[2] notice is hereby given that on March 10, 2000, the American Stock Exchange LLC (''Amex'' or ''Exchange'') filed with the Securities and Exchange Commission (''SEC'' or ''Commission'') the proposed rule change as described in Items I, II and III below, which Items have been prepared by the Exchange. On April 1, 2000, the Exchange filed Amendment No. 1 to the proposed rule change with the Commission, which amendment replaces and supersedes the original proposal.[3] The Commission is publishing this notice to solicit comments on the proposed rule change, as amended, from interested persons.

### I. Self-Regulatory Organization's Statement of the Terms of Substance of the Proposed Rule Change

The Amex proposes to eliminate transaction, clearance, and floor brokerage fees for customer equity options orders. The Exchange also proposes to increase the specialist and market maker floor brokerage fee for both equity and index options transactions.[4]

### II. Self-Regulatory Organization's Statement of the Purpose of, and Statutory Basis for, the Proposed Rule Change

In its filing with the Commission, the Exchange included statements concerning the purpose of and basis for the proposed rule change and discussed any comments it received on the proposed rule change. The text of these statements may be examined at the places specified in Item IV below. The Exchange has prepared summaries, set forth in Sections A, B, and C below, of the most significant aspects of such statements.

*A. Self-Regulatory Organization's Statement of the Purpose of, and Statutory Basis for, the Proposed Rule Change*

1. Purpose

The Amex proposes to eliminate transaction, clearance, and floor brokerage fees for customer equity options orders. The Exchange also proposes to increase the specialist and market maker floor brokerage fee for both equity and index options transactions. The proposed fee schedule would be applicable to options transactions effected on and after April 1, 2000.[5]

The Amex currently imposes a transaction charge on options trades executed on the Exchange. The charges vary depending on whether the transaction involves an equity or index option and whether the transaction is executed for a member firm proprietary account, a specialist or market maker account, or a customer account. The Amex also imposes a charge for clearance of options trades and an options floor brokerage charge, which also depends upon the type of account for which the trade is executed. In addition, all three of charges—transaction, options clearance, and options floor brokerage—are subject to caps on the number of options contracts subject to the charges on a given day.[6]

Current, for customer equity and index options transactions, the Amex does not charge a transaction fee for market and marketable limit orders of 30 contracts or less.[7] The Amex charges a transaction fee of $0.10 for customer equity and index options transactions (per contract side) for limit orders up to 30 contracts and all orders exceeding 30 contracts.[8] These customer options transactions fees also apply to both LEAPS[9] and FLEX[10] options. The current clearance fee for customer equity options transactions is $0.04 per contract side. The floor brokerage fee for customer equity options orders is $0.02 per contract side.

Under the revised fee schedule, the Exchange proposes to eliminate all transaction, clearance, and floor brokerage fees for customer equity options orders. Fees currently charged to customers for transactions in index options will remain unchanged. To offset the Exchange's elimination of transaction, clearance, and floor brokerage fees for customer equity options transactions, the Exchange proposes to raise certain fees charged to members. Specifically the Exchange proposes to increase the equity options transaction fee from $0.07 to $0.19 per contract side for member firm proprietary orders and from $0.08 to $0.17 per contract side for specialist and market maker orders. Transaction charges for broker-dealers facilitating customer equity options orders will remain unchanged at $0.07 per contract side.

Under the Exchange's proposal, options clearance fees for member firms, specialists, and market makers will remain unchanged at $0.04 per contract side. The Exchange proposes to increase the specialist and market marker options floor brokerage fee from $0.02 to $0.03 per contract side for both equity and index transactions.[11] Options floor brokerage fees for member firms will remains unchanged at $0.03.

The Exchange represents that customers will receive actual cost savings of approximately $17.5 million, based upon third quarter, 1999 annualized option contract volume.[12] The Exchange believes that the proposed fee changes are necessary to make the Exchange's options transaction charges more competitive with other options exchanges' fees and with the

[1] 15 U.S.C. 78s(b)(1).

[2] 17 CFR 240.19b–4.

[3] Letter from Scott Van Hatten, Legal Counsel, Derivative Securities, Nasdaq-Amex, to Nancy Sanow, Assistant Director, Division of Market Regulation (''Division''), Commission, dated March 31, 2000 (''Amendment No. 1''). In response to comments from Commission staff, the Exchange submitted Amendment No. 1 to withdraw the portion of the filing that would increase the equity options transaction fees charged to non-member broker-dealers. Amendment No. 1 also: (i) makes certain technical corrections to the Amex's options fee schedule; (ii) proposes to increase the specialist and market maker floor brokerage fee from $0.02 to $0.03 per contract side for both equity and index options; (iii) states that all fee changes are effective April 1, 2000; and (iv) clarifies that the cost savings estimate to customers is based on third quarter, 1999 trading volume.

[4] *Id.*

[5] *Id.*

[6] The current caps are set at 2,000 contracts for customer trades and 3,000 contracts for member firm proprietary, non-member broker-dealer, specialist and market maker trades.

[7] *See* Securities Exchange Act Release No. 41370 (May 5, 1999), 64 FR 25931 (May 13, 1999).

[8] *Id.*

[9] LEAPs are Long Term Equity Anticipation Securities or options with durations of up to 36 months. *See* Amex Rule 903C.

[10] FLEX options are customized options with individually specified terms such as strike price, expiration date, and exercise style. *See* Amex Rule 900G.

[11] *See* Amendment No. 1, *supra* note 3.

[12] *Id.*

costs of trading other financial instruments, and to increase the number of options orders that are routed to the Exchange. While the Exchange anticipates that other options exchanges may also reduce fees charged to customers, it believes that the proposed fee changes will increase options usage among all investors and stimulate industry-wide growth in the options business.

2. Statutory Basis

The Exchange believes that the proposed rule change is consistent with Section 6(b) of the Act [13] in general, and furthers the objectives of Section 6(b)(4) [14] in particular, in that it provides for the equitable allocation of reasonable dues, fees and other charges among its members and other persons using its facilities.

*B. Self-Regulatory Organization's Statement on Burden on Competition*

The Amex does not believe that the proposed rule change will impose any burden on competition.

*C. Self-Regulatory Organization's Statement on Comments on the Proposed Rule Change Received From Members, Participants, or Others*

The Exchange has neither solicited nor received comments on the proposed rule change.

**III. Date of Effectiveness of the Proposed Rule Change and Timing for Commission Action**

The proposed rule change has become effective pursuant to Section 19(b)(3)(A)(ii) of the Act,[15] and Rule 19b–4(f)(2) thereunder,[16] in that it establishes or changes a due, fee, or other charge imposed by the Exchange. At any time within 60 days of the filing of such proposed rule change, the Commission may summarily abrogate such rule change if it appears to the Commission that such action is necessary or appropriate in the public interest, for the protection of investors or otherwise in furtherance of the purposes of the Act.[17]

**IV. Solicitation of Comments**

Interested persons are invited to submit written data, views, and arguments concerning the foregoing, including whether the proposed rule change, as amended, is consistent with the Act. Persons making written submissions should file six copies thereof with the Secretary, Securities and Exchange Commission, 450 Fifth Street, N.W., Washington, D.C. 20549–0609. Copies of the submission, all subsequent amendments, all written statements with respect to the proposed rule change that are filed with the Commission, and all written communications relating to the proposed rule change between the Commission and any person, other than those that may be withheld from the public in accordance with the provisions of 5 U.S.C. 552, will be available for inspection and copying at the Commission's Public Reference Room. Copies of such filing will also be available for inspection and copying at the principal office of the Exchange. All submissions should refer to the File No. SR–Amex–00–15 and should be submitted by May 11, 2000.

For the Commission, by the Division of Market Regulation, pursuant to delegated authority.[18]

**Jonathan G. Katz,**

*Secretary.*

[FR Doc. 00–9917 Filed 4–19–00; 8:45 am]

**BILLING CODE 8010–01–M**

[13] 15 U.S.C. 78f(b).

[14] 15 U.S.C. 78f(b)(4).

[15] 15 U.S.C. 78s(b)(3)(A)(ii).

[16] 17 CFT 240.19b–4(f)(2).

[17] In reviewing this proposal, the Commission has considered its impact on efficiency, competition, and capital formation. 15 U.S.C. 78c(f).

[18] 17 CFR 200.30–3(a)(12)

---

## SECURITIES AND EXCHANGE COMMISSION

**[Release No. 34–42687; File No. SR–Amex–99–25]**

## Self-Regulatory Organizations; Order Granting Approval to Proposed Amendments to the Amex Constitution by the American Stock Exchange LLC Eliminating the Requirement That the Chairman Also Be the CEO

April 13, 2000.

**I. Introduction**

On July 16, 1999, the American Stock Exchange, Inc. (''Amex'' or ''Exchange'') submitted to the Securities and Exchange Commission (''Commission''), pursuant to Section 19(b)(1) of the Securities Exchange Act of 1934 (''Act'')[1] and Rule 19b–4 [2] thereunder, a proposed rule change. In its proposal, Amex seeks to eliminate the requirement that the Chairman also be the Chief Executive Officer (''CEO'') of the Exchange. The proposed rule change was published for comments in the **Federal Register** on January 7, 2000.[3] The Commission received no comments on the filing and this order approves the proposal.

**II. Description of the Proposal**

Article II, Section 4(a) of the Amex Constitution currently requires that the Chairman of the Board also act as the CEO of the Exchange. The Chairman thus performs the standard functions of a Board Chairman, as well as being responsible to the Board for the management and administration of the affairs of the Exchange as CEO.

The Exchange proposes to amend Article II, Section 4(a) of the Constitution to eliminate the requirement that the Chairman also act as the CEO of the Exchange. Amex represents that the NASD's two other subsidiaries (the Nasdaq Stock Market and NASD Regulation), both have non-executive Chairmen. Amex believes that having a non-executive Chairman attend to the functions of a Chairman would allow the CEO to focus on the operations of the Exchange. Nevertheless, the proposal gives Amex the flexibility to choose to have two people fill the Chairman and CEO positions or to have the same person fill these two positions.

As a result of the amendment to Article II, Section 4(a) of the Constitution, Amex made a number of conforming changes to other provisions of the Constitution and rules. Before this proposal, Amex's rules generally did not make a distinction between whether the Chairman/CEO was serving in his capacity as the Chairman or the CEO and used the term ''Chairman'' for both of these functions. To allow for separate persons to serve as Chairman and CEO, Amex examined its rules and made a determination as to whether a particular function was normally handled by the Chairman or CEO. Based on this examination, Amex then changed the term ''Chairman'' to CEO when it determined that Chairman/CEO was acting in his capacity as the CEO. Amex had to make choices, however, when the function was properly performed by either the Chairman or the CEO. In addition, Article II, Section 3 (Chairman) and Article II, Section 4(a) (Chief Executive Officer), discussing the selection and authority of the Chairman and CEO respectively, have been appropriately rearranged. Other than splitting the Chairman and CEO roles and making the above-mentioned conforming changes, the Amex represents that there are no substantive changes being made.

**III. Discussion**

The Commission finds that the proposed rule change is consistent with

[1] 15 U.S.C. 78s(b)(1).

[2] 17 CFR 240.19b–4

[3] *See* Securities Exchange Act Release No. 42307 (January 3, 2000), 65 FR 1206.

the requirements of the Act.[4] In particular, the Commission finds the proposal is consistent with Section 6(b)(5)[5] of the Act. Section 6(b)(5) requires, among other things, that the rules of an exchange be designed to promote just and equitable principles of trade and to protect investors and the public interest.

The Commission believes that the proposal is consistent with the Act. In particular, Amex represented that splitting the Chairman/CEO functions will allow the CEO to focus on the operations of the Exchange. The Commission agrees and believes that the proposal should allow the CEO to devote more time to the day-to-day operations of the Exchange.

In approving this rule change, however, the Commission notes that the proposed language now permits the Chairman to be affiliated with a member of the Exchange if separate persons hold the Chairman and CEO positions. As the Commission stated in the order approving the International Securities Exchange LLS's application for registration as a national securities exchange, the affiliation of the Chairman with one of the Exchange's members implicates certain conflicts of interest, or at least gives the appearance of such conflicts.[6] Amex represented that it made this change to make its corporate governance structure consistent with other NASD entities, such as NASD Regulation, which in 1999 had a Chairman who was affiliated with an NASD member. Amex also represented that the change, other than splitting the Chairman and CEO positions, will have no substantive effect on the operation of the Exchange. Nevertheless, if Amex chooses to split the Chairman/CEO positions and has a Chairman affiliated with a member, Amex's Chairman should avoid actual or apparent conflicts of interest.

## IV. Conclusion

*It is therefore ordered,* pursuant to Section 19(b)(2) of the Act,[7] that the proposed rule change (SR–Amex–99–25) is approved.

For the Commission, by the Division of Market Regulation, pursuant to delegated authority.[8]

**Jonathan G. Katz,**

*Secretary.*

[FR Doc. 00–9919 Filed 4–19–00; 8:45 am]

BILLING CODE 8010–01–M

[4] In addition, purusant to Section 3(f) of the Act, the Commission has considered the proposed rule's impact on efficiency, competition, and capital formation. 15 U.S.C. 78c(f).

[5] 15 U.S.C. 78f(b)(5).

[6] *See* Securities Exchange Act Release No. 42455 (February 24, 2000), 65 FR 11401 (March 2, 2000) (File No. 10–127).

[7] 15 U.S.C. 78s(b)(2).

[8] 17 CFR 200.30–3(a)(12).

---

## SECURITIES AND EXCHANGE COMMISSION

**[Release No. 34–42672; File No. SR–NASD–00–10]**

## Self-Regulatory Organizations; Notice of Filing and Immediate Effectiveness of Proposed Rule Change by the National Association of Securities Dealers, Inc. Relating to Its Transaction Credit Pilot Program

April 12, 2000.

Pursuant to section 19(b)(1) of the Securities Exchange Act of 1934 (''Act'')[1] and Rule 19b–4 thereunder,[2] notice is hereby given that on March 6, 2000, the National Association of Securities Dealers, Inc. (''NASD'' or ''Association''), through its wholly-owned subsidiary, The Nasdaq Stock Market, Inc. (''Nasdaq''), filed with the Securities and Exchange Commission (''Commission'') the proposed rule change as described in Items I, II, and III below, which Items have been prepared by Nasdaq. Nasdaq filed an amendment to the proposed rule change on March 31, 2000,[3] which amendment replaces and supersedes the original proposal. The Commission is publishing this notice to solicit comments on the proposed rule change, as amended, from interested persons.

### I. Self Regulatory Organization's Statement of the Terms of Substance of the Proposed Rule Change

Nasdaq is filing a proposed rule change amending NASD Rule 7010 to extend Nasdaq's transaction credit pilot program for an additional six months for Tape A reports and to discontinue the pilot program for Tape B reports. Below is the text of the proposed rule change. Proposed new language is in italic; proposed deletions are in brackets.

**7010 System Services**

(a)–(b) No Change.

(c)(1) No Change.

(2) *Exchange*-Listed Securities Transaction Credit. For a pilot period, qualified NASD members that trade securities listed on the NYSE [and Amex] in over-the-counter transactions reported by the NASD to the Consolidated Tape Association may receive from the NASD transaction credits based on the number of trades so reported. To qualify for the credit with respect to Tape A reports, an NASD member must account for 500 or more average daily Tape A reports of over-the-counter transactions as reported to the Consolidated Tape during the concurrent calendar quarter. [To qualify for the credit with respect to Tape B reports, an NASD member must account for 500 or more average daily Tape B reports of over-the-counter transactions as reported to the Consolidated Tape during the concurrent calendar quarter.] If an NASD member is so qualified to earn credits based [either] on its Tape A activity, [or its Tape B activity, or both,] that member may earn credits from [one or both (as the case may be, depending on the qualification standards) pools] *the Tape A pool* maintained by the NASD, [each] *such* pool representing 40% of the revenue paid by the Consolidated Tape Association to the NASD for [each of] Tape A [and Tape B] transactions. A qualified NASD member may earn credits from [such pools] *the Tape A pool* according to the member's pro rata share of the NASD's over-the-counter trade reports in [each of] Tape A [and Tape B] for each calendar quarter starting with [July 1, 1999, and ending with the calendar quarter starting on October 1, 1999] *January 1, 2000, and ending with the calendar quarter starting on April 1, 2000.*

### II. Self-Regulatory Organization's Statement of the Purpose of, and Statutory Basis for, the Proposed Rule Change

In its filing with the Commission, Nasdaq included statements concerning the purpose of, and basis for, the proposed rule change and discussed any comments it received on the proposed rule change. The text of these statements may be examined at the places specified in Item IV below. Nasdaq has prepared summaries, set forth in Sections A, B, and C below, of the most significant aspects of such statements.

[1] 15 U.S.C. 78s(b)(1).

[2] 17 CFR 240.19b–4.

[3] *See* Letter to Katherine A. England, Assistant Director, Commission, from Robert E. Aber, Senior Vice President and General Counsel, Nasdaq, dated March 30, 2000 (''Amendment No. 1''). Amendment No. 1 makes certain technical corrections to the proposed rule change.

*A. Self-Regulatory Organization's Statement of the Purpose of, and Statutory Basis for, the Proposed Rule Change*

1. Purpose

Nasdaq is proposing to extend, for an additional six months, its pilot program to provide a transaction credit [4] to NASD members that exceed certain levels of over-the-counter (''OTC'') trading activity in securities listed on the New York Stock Exchange (''NYSE''). In addition, Nasdaq is proposing to discontinue the pilot program for OTC trading in securities listed on the American Stock Exchange (''Amex''). The NASD established its transaction credit pilot program to assist in finding ways to lower investor costs associated with trading listed securities, and to respond to steps taken by other exchanges that compete with Nasdaq for investor order flow in those issues.

*Background.* Nasdaq's Third Market is a quotation, communication, and execution system that allows NASD members to trade stocks listed on the NYSE and the Amex. The Third Market competes with the regional exchanges like the Chicago Stock Exchange (''CHX'') and the Cincinnati Stock Exchange (''CSE'') for retail order flow in stocks listed on the NYSE and the Amex. The NASD collects quotations from broker-dealers that trade these securities OTC and provides such quotations to the Consolidated Quotation System for dissemination. Additionally, the NASD collects trade reports from broker-dealers trading these securities in the OTC market and provides the trade reports to the Consolidated Tape Association (''CTA'') for inclusion in the Consolidated Tape. As a participant in the CTA, the NASD earns a share of the revenue from trades that it reports on behalf of those broker-dealers in NYSE-listed securities (''Tape A'') and in Amex-listed securities (''Tape B''). Nasdaq created the credit pools for qualified pilot participants from the NASD's share of these revenues.

Nasdaq's transaction credit pilot program is intended to lower costs for Third Market Makers and their customers who execute trades in exchange-listed stocks through NASD members and Nasdaq facilities. The NASD believes that lowering the cost of trading increases competition among market centers trading listed securities. Continuation of the pilot will allow Nasdaq to continue to evaluate the efficacy of its revenue sharing model and continue to effectively compete for the retention of Third Market participants with other regional exchanges that have adopted similar revenue distribution methodologies.[5]

*Pilot Program.* Under the original transaction credit pilot program,[6] Nasdaq calculated two separate pools of revenue from which credits can be earned. The first represented 40% of the gross revenues received by the NASD from the CTA for providing trade reports in NYSE-listed securities executed in the Third Market for dissemination by the CTA (''Tape A''). The other represented 40% of the gross revenue received from the CTA for reporting Amex trades (''Tape B''). Under the proposal, the Tape A calculation pool will remain at the same 40% level, and the pool of revenue previously generated from gross revenue received from the CTA for reporting Amex trades will be discontinued.

Eligibility for transaction credits during the pilot's extension will be based upon concurrent quarterly trading activity in NYSE-listed securities. For example, a Third Market participant that recently entered the market for Tape A securities during the first quarter of 2000 and printed an average of 500 daily trades of Tape A securities during the time it is in the market, or that averaged 500 daily Tape A prints during the entire quarter, would be eligible to receive transaction credits based on its trades during the first quarter. As in the original pilot, only those NASD members who continue to average an appropriate daily execution level during the term of the pilot's extension would be eligible for transaction credits and thus able to receive a pro-rata portion of the 40% revenue calculation pools.[7] The NASD chose to create these thresholds to permit the NASD to recover appropriate administrative costs related to NASD members that do not exceed the threshold and to encourage NASD members to actively trade in these securities.

As before, a fully-qualifying NASD member's transaction credit will be determined by taking its percentage of total Third Market transactions during the applicable calculation period and providing an equivalent percentage from the appropriate Tape A calculation pool. Thus, for each calendar quarter commencing with the calendar quarter that began on January 1, 2000, the NASD will measure a qualified member's Tape A trade reports for that calendar and create a credit for the member based upon this activity. For example, if a qualifying NASD member's transactions represent 10% of the NASD's Tape A transactions, that member would receive a 10% share of the Tape A 40% calculation pool. Unlike the original pilot, however, the transaction credit will be available only to NASD members that trade NYSE-listed securities in the Third Market in order to focus the competitive thrust of this initiative toward the NYSE during the tme the NASD remains the sole shareholder of Nasdaq.

Nasdaq's transaction credit program is being proposed on a pilot basis only. There can be no guarantee that transaction credits will be available to qualifying NASD members beyond the term of the pilot.

2. Statutory Basis

Nasdaq believes that the proposed rule change is consistent with the provisions of Section 15A(b)(6) of the Act,[8] in that the proposal is designed to promote just and equitable principles of trade and to remove impediments to and perfect the mechanisms of a national market system and, in general, to protect investors and the public interest. Nasdaq believes the proposed rule change is also consistent with Section 15A(b)(5) [9] of the Act in that it provides for the equitable allocation of reasonable dues, fees and other charges among members and issuers and other persons using any facility or system that the Association operates or controls.

*B. Self-Regulatory Organization's Statement on Burden on Competition*

Nasdaq does not believe that the proposed rule change will result in any burden on competition that is not necessary or appropriate in furtherance of the purposes of the Act.

[4] The transaction credit can be applied to any and all charges imposed by the NASD or its non-self-regulatory organization affiliates. Any remaining balance may be paid directly to the member.

[5] Both the CHX and the CSE have established similar programs. *See* Securities Exchange Act Release Nos. 38237 (Feb. 4, 1997), 62 FR 6592 (Feb. 12, 1997) (SR–CHX–97–01) and 39395 (Dec. 3, 1997), 62 FR 65113 (Dec. 10, 1997) (SR–CSE–97–12).

[6] *See* Securities Exchange Act Release No. 41174 (March 16, 1999), 64 FR 14034 (March 23, 1999) (SR–NASD–99–13). The original pilot was effective from October 1, 1998 through June 30, 1999. Nasdaq subsequently extended the pilot through December 31, 1999. *See* Securities Exchange Act Release No. 42095 (Nov. 3, 1999), 64 FR 61680 (Nov. 12, 1999) (SR–NASD–99–59).

[7] The qualification thresholds were selected based on Nasdaq's belief that such numbers represent clear examples of a member's commitment to operating in the Third Market and competing for order flow.

[8] 15 U.S.C. 78o-3(b)(6).

[9] 15 U.S.C. 78o-3(b)(5).

*C. Self-Regulatory Organization's Statement on Comments on the Proposed Rule Change Received From Members, Participants, or Others*

Nasdaq did not solicit or receive written comments on the proposed rule change.

**III. Date of Effectiveness of the Proposed Rule Change and Timing for Commission Action**

The proposed rule change has become immediately effective pursuant to Section 19(b)(3)(A)(ii) of the Act [10] and Rule 19b–4(f)(2) thereunder,[11] in that it establishes or changes a due, fee or other charge imposed by the Association. At any time within 60 days [12] of the filing of such rule change, the Commission may summarily abrogate such rule change if it appears to the Commission that such action is necessary or appropriate in the public interest, for the protection of investors, or otherwise in furtherance of the purposes of the Act.[13]

**IV. Solicitation of Comments**

Interested persons are invited to submit written data, views, and arguments concerning the foregoing, including whether the proposed rule change is consistent with the Act. Persons making written submissions should file six copies thereof with the Secretary, Securities and Exchange Commission, 450 Fifth Street, NW, Washington, DC 20549–0609. Copies of the submission, all subsequent amendments, all written statements with respect to the proposed rule change that are filed with the Commission, and all written communications relating to the proposed rule change between the Commission and any person, other than those that may be withheld from the public in accordance with the provisions of 5 U.S.C. 552, will be available for inspection and copying in the Commission's Public Reference Room. Copies of such filing will also be available for inspection and copying at the principal office of the NASD. All submissions should refer to the File No. SR–NASD–00–10 and should be submitted by May 11, 2000.

[10] 15 U.S.C. 78s(b)(3)(A)(ii).

[11] 17 CFR 240.19b-4(f)(2).

[12] Because Amendment No. 1 replaces the original proposal, the 60 day period will be calculated based on a March 31, 2000 filing date.

[13] In reviewing this proposal, the Commission has considered its impact on efficiency, competition, and capital formationl 15 U.S.C. 78c(f).

For the Commission, by the Division of Market Regulation, pursuant to delegated authority. [14]

**Jonathan G. Katz,**

*Secretary.*

[FR Doc. 00–9878 Filed 4–19–00; 8:45 am]

BILLING CODE 8010–01–M

---

## SECURITIES AND EXCHANGE COMMISSION

**[Release No. 34–42671; File No. SR–NYSE–00–12]**

## Self-Regulatory Organizations; Notice of Filing and Order Granting Accelerated Approval of Proposed Rule Change and Amendment Nos. 1 and 2 Thereto by the New York Stock Exchange, Inc. Relating to Original and Continued Listing Standards for Affiliated Companies

April 12, 2000.

Pursuant to Section 19(b)(1) of the Securities Exchange Act of 1934 (''Act''),[1] and Rule 19b–4 thereunder,[2] notice is hereby given that on March 15, 2000, the New York Stock Exchange, Inc. (''NYSE'' or ''Exchange'') filed with the Securities and Exchange Commission (''SEC'' or ''Commission'') the proposed rule change as described in Items I, and II below, which Items have been prepared by the Exchange. On March 28, 2000, the Exchange submitted Amendment No. 1 to the proposed rule change.[3] On April 12, 2000, the Exchange submitted Amendment No. 2 to the proposed rule change.[4] The Commission is publishing this notice to solicit comments on the proposed rule change, as amended, from interested persons and to grant accelerated approval to the proposed rule change and Amendment Nos. 1 and 2.

[14] 17 CFR 200.30–3(a)(12).

[1] 15 U.S.C. 78s(b)(1).

[2] 17 CFR 240.19b–4.

[3] In Amendment No. 1, the NYSE clarified the method of analysis of a listed company's good-standing status. *See* letter from James E. Buck, Senior Vice President and Secretary, NYSE, to Belinda Blaine, Associate Director, Division of Market Regulation (''Division'', SEC, dated March 24, 2000 (''Amendment No. 1'').

[4] In Amendment No. 2, the Exchange proposed to apply the changes proposed in Amendment No. 1 to paragraph 102.01C, U.S. companies, to paragraph 103.01B, Non-U.S. companies. The Exchange also proposed to delete the proposed rule text from paragraph 802.01C which would have applied the Price Criteria standard to a situation which is the subject of a separate proposed rule change by the Exchange. Furthermore, the Exchange changed their request for accelerated approval to April 12 from April 10, 2000, and the Exchange expanded their explanation of the proposed rule change in the purpose section of the filing. *See* letter from James E. Buck, Senior Vice President and Secretary, NYSE, to Belinda Blaine, Associate Director, Division, SEC, dated April 11, 2000 (''Amendment No. 2'').

**I. Self-Regulatory Organization's Statement of the Terms of Substance of the Proposed Rule Change**

The proposed rule change consists of amendments to Sections 102.01B, 102.01C, 103.01A, 103.01B, 802.01B and 802.01C of the *Listed Company Manual* (''Manual'') of the Exchange. These sections of the Manual set forth the financial original and continued listing standards of the Exchange. The text of the proposed rule change, as amended, is as follows. New text is *italicized.*

**NYSE Listed Company Manual**

* * * * *

Section 1

The Listing Process

* * * * *

102.01B. A company must demonstrate an aggregate market value of publicly-held shares of $60,000,000 for companies that list either at the time of their initial public offerings (''IPOs'')(C) or as a result of spin-offs *or under the Affiliated Company standard*, and $100,000,000 for other companies (D).

102.01C. A company must meet one of the following financial standards:

* * * * *

*(IV) Affiliated Company Standard* [5]

*(1) Market capitalization of $500 million or greater (as evidenced by written representation from the underwriter, company, or its investment advisor);*

*(2) Minimum of 12 months of operations (although it is not required to have been a separate corporate entity for such period);*

*(3) Parent or affiliated company is a listed company in good standing (as evidenced by written representation from the company or its financial advisor excluding that portion of the balance sheet attributable to the new entity); and*

*(4) Parent/affiliated company retains control* of the entity or is under common control* with the entity.*

** ''Control'' for these purposes will mean the ability to exercise significant influence over operating and financial policies, and will be presumed to exist when the parent involved holds directly or indirectly 20% or more of the entity's voting stock. Other idicia*

[5] The formatting of the components in the proposed Affiliated Company listing standard were changed from capital letters (A, B, C, and D) to numbers (1, 2, 3, and 4). Telephone conversation between James Duffy, Senior Vice President and Associate General Counsel, NYSE, and Heather Traeger, Attorney, Division, SEC, on April 12, 2000.

*that may be taken into account for this purpose include board representation, participation in policymaking processes, material intercompany transactions, interchange of managerial personnel, and technological dependency. This test is taken from and intended to be consistent with generally accepted accounting principles regarding use of the equity method of accounting for an investment in common stock.*

* * * * *

103.01A. A company must meet the following distribution and size requirements

* * * * *

Market value of publicly-held shares (A)—$100 million Worldwide(B)

or for companies listing under the Affiliated Company standard—$60 million Worldwide(B)

103.01B. A company must meet one of the following financial standards:

* * * * *

*OR*

*(IV) Affiliated Company Standard* [6]

*(1) Market capitalization of $500 million or greater (as evidenced by written representation from the underwriter, company, or its investment advisor);*

*(2) Minimum of 12 months of operations (although it is not required to have been a separate corporate entity for such period);*

*(3) Parent or affiliated company is a listed company in good standing (as evidenced by written representation from the company or its financial advisor excluding that portion of the balance sheet attributable to the new entity); and*

*(4) parent/affiliated company retains control* of the entity or is under common control* with the entity.*

** ''Control'' for these purposes will mean the ability to exercise significant influence over operating and financial policies, and will be presumed to exist when the parent involved holds directly or indirectly 20% or more of the entity's voting stock. Other indicia that may be taken into account for this purpose include board representation, participation in policymaking processes, material intercompany transactions, interchange of managerial personnel, and technological dependency. This test is taken from and intended to be consistent with generally accepted accounting principles regarding use of the equity method of accounting for an investment in common stock.*

* * * * *

[6] The formatting of the components in the proposed Affiliated Company listing standard were changed from capital letters (E, F, G, and H) to numbers (1, 2, 3 and 4). *Id.*

Section 8

Suspension and Delisting

802.01B Numerical Criteria for Capital or Common Stock.

* * * * *

*Affiliated Companies—Will not be subject to the $50 million market capitalization and stockholders' equity test unless the parent/affiliated company no longer controls the entity or such parent/affiliated company itself falls below the continued listing standards in this section.*

Funds will be subject to immediate suspension and delisting procedures if (1) the average market capitalization over 30 consecutive trading days is below $15,000,000 or (2) the Fund ceases to maintain its closed-end status. The Exchange will notify the fund if the average market capitalization falls below $25,000,000 and advise the fund of the delisting standard. Funds are not subject to the procedures outlined in Paras. 802.02 and 802.03.

* * * * *

802.01C Price Criteria

* * * * *

*Notwithstanding the foregoing, if the subject security is a stock listed under the Affiliated Company standard where the parent remains in ''control'' as the term is used in that standard, the Exchange may determine whether to apply the Price Criteria to such security after evaluating the financial status of the company and/or the parent/affiliated company, as the case may be.*

## II. Self-Regulatory Organization's Statement of the Purpose of, and Statutory Basis for, the Proposed Rule Change

In its filing with the Commission, the Exchange included statements concerning the purpose of and basis for the proposed rule change and discussed any comments it received on the proposed rule change. The text of these statements may be examined at the places specified in Item III below. The Exchange has prepared summaries, set forth in Sections A, B, and C below, of the most significant aspects of such statements.

### *A. Self-Regulatory Organization's Statement of the Purpose of, and Statutory Basis for, the Proposed Rule Change*

1. Purpose

The purpose of the proposed rule change is to add a new original listing standard and related continued listing standard to the Exchange's listing criteria.

According to the Exchange, companies in the current capital markets are employing strategies to ''unlock value'' in a portion of their business, particularly internet-related business. These include initial public offerings which spin-off or carve-out a subsidiary, as well as issuing ''tracking stocks,'' *i.e.,* stocks of an issuer that are intended to track the value of a portion of the issuer's business. Currently, the Exchange lists tracking stocks as additional shares of a listed issuer, but requires carve-outs and spin-offs to separately qualify under the original listing standards, even when the transaction is similar in many respects to one involving a tracking stock. The Exchange represents that its issuers, given a substantial continuing interest in these new entities, would like to keep them listed on the Exchange, and the Exchange agrees that in many cases that would appear to be appropriate. Accordingly, the Exchange is proposing to adopt a new Affiliated Company original listing standard, and a related continuing listing standard, that would accommodate these companies. The Exchange notes that conventional ''tracking stocks'' will continue to be listed without specific separate financial standards as they qualify as additional classes of securities of the already listed company.

Currently, all domestic companies listing on the Exchange must meet the distribution and minimum public market capitalization standards set forth in Sections 102.01A and 102.01B of the Manual, and Non-U.S. companies must meet the standards set forth in Section 103.01A. The Exchange notes that the pertinent sections of the Manual to this proposed rule change are Sections 102.01C and 103.01B, which set forth the financial criteria an applicant must meet. In applying the proposed Affiliated Company standard, therefore, applicants must comply with Sections 102.01A and 102.01B for domestic companies and Section 103.01A for Non-U.S. companies. The proposed changes to Sections 102.01C and 103.01B, which are identical, set forth four components as the minimum listing criteria for Affiliate Companies, including: (a) that the company have a market capitalization of $500 million or greater; (b) that the company have been in operation for a minimum of 12 months; (c) that the parent or affiliated company is a listed company in good standing; and (d) that the parent/affiliated company retains control of the entity or is under common control with the entity.

First, the Exchange proposes that the market capitalization of the Affiliated

Company must be at least $500 million to ensure the entity is of a size for which the new standard is appropriate. With respect to this requirement, the Exchange will require written representation from the underwriter, company or its investment adviser, as applicable, in order to establish that the new entity will have a minimum market capitalization of $500 million. The Exchange notes that the public market value of the Affiliated Company, as with spin-offs and carve outs, for example, must be at least $60 million.

Second, the Exchange proposes a maturation component that would require a minimum of twelve months of operations prior to the new listing. In this regard, the Exchange seeks to ensure that the entity is an appropriate candidate for the new standard by demonstrating operations for at least one year. The Exchange notes that there is no requirement that the entity be a separate corporate entity for such period, as it believes that such a construct is often not utilized by large corporations with multiple operating units.

Third, the proposed standard would require a two-part test with regard to the parent or affiliated company. First, it must be a listed company in good standing. The Exchange represents that in determining whether the parent/affiliate is in good standing, it will take into consideration the portion of the business that is becoming the new company. Specifically, in determining the stockholders' equity of the parent, the portion applicable to the new entity not retained by the parent/affiliate would be deducted. The Exchange will require written representation from the underwriter, company or its investment advisor, as applicable, in order to establish that the parent/affiliate will remain in good standing following he severance of the new entity. In adopting this approach, the Exchange seeks to prevent any double counting of the value of the new entity during the listing process. Second, the parent/affiliate must retain a certain amount of control (or be under common control). The Exchange believes the appropriate threshold at which to set a presumption of control is 20%. The Exchange will evaluate all inter-locking elements between the parent and the new entity in making the determination of whether sufficient control is retained such that the Affiliated Company standard is appropriate.

In addition to the proposed initial listing standard, the Exchange is proposing two changes to its continued listings standards. To maintain listing on the Exchange, companies must exceed a conjunctive test of at least both $50 million in market capitalization and $50 million in shareholders' equity, and a stand-along market capitalization minimum of at least $15 million. With respect to companies listed under the proposed Affiliated Company standard, the conjunctive test in Section 802.01B of the Manual would only be applied in the event that the parent/affiliated company no longer controls the entity or the parent/affiliated company itself fell below the continued listing standard. In this regard, the Exchange believes that, so long as the parent is in good financial standing and control is maintained, the new entity should be subject only to the minimum standard of $15 million in market capitalization.

The second proposed change to the continued listing standards pertains to Section 802.01C of the Manual. This section imposes a $1 Price Criteria, so that a security for which the stock price has fallen below $1 would be considered by the Exchange to be below continued listing standards. Again, the Exchange believes that, so long as the control elements continue to be in place, the application of the Price Criteria may not necessarily be appropriate. In this regard, the Exchange will evaluate the financial status of both the new company and the parent/affiliated company.[7]

2. *Statutory Basis*

The Exchange represents that the proposed rule change is consistent with the requirement under Section 6(b)(5) of the Act;[8] that an Exchange have rules that are designed to promote just and equitable principles of trade, to remove impediments to, and perfect the mechanism of a free and open market and, in general, to protect investors and the public interest.

*B. Self-Regulatory Organization's Statement on Burden on Competition*

The Exchange does not believe that the proposed rule change will impose any burden on competition that is not necessary or appropriate in furtherance of the purposes of the Act.

*C. Self-Regulatory Organization's Statement on Comments on the Proposed Rule Change Received from Members, Participants or Others*

The Exchange solicited comments from its Legal Advisory Committee and Listed Company Advisory Committee. All comments received from the two Committees were in support of the proposed amendments.[9] The sole written comment support the proposal because transactions that result in Affiliated companies ''maximize value and return to operational units of a more controllable size.''[10] This commenter also stated that fees on Affiliated Company listings should be addressed at some point, and suggested that there should be a notion of a segregated operational unit, division, or management in addition to the 12 months of operating results.[11] In addition, this commenter questioned whether the 12-month benchmark is sufficient.[12]

In response to this commenter, the Exchange stated that it will address the issue of fees separately, and noted that most divisions that evolve into separate entities are segregated with a management structure in place in the particular division.[13] The Exchange further stated that it believes 12 months provides a sufficient benchmark as it would allow for an adequate gauge of credibility that the division was not formed solely to effectuate the transaction.[14]

## III. Solicitation of Comments

Interested persons are invited to submit written data, views and arguments concerning the foregoing, including whether the proposed rule change, as amended, is consistent with the Act. Persons making written submissions should file six copies thereof with the Secretary, Securities and Exchange Commission, 450 Fifth Street N.W., Washington, D.C. 20549–0609. Copies of the submission, all subsequent amendments, all written statements with respect to the proposed rule change that are filed with the Commission, and all written communications relating to the proposed rule change between the Commission and any person, other than those that may be withheld from the public in accordance with the provisions of 5 U.S.C. 552, will be available for inspection and copying in the Commission's Public Reference Room. Copies of such filings will also be available for inspection and copying at the principal office of the NYSE. All submissions should refer to File No.

[7] The Exchange notes that a similar change has been proposed regarding applicability of the Price Criteria to second classes of securities. This proposed change has been filed with the Commission (SR–NYSE–00–08).

[8] 15 U.S.C. 78f(b)(5).

[9] The Exchange noted that all comments were verbal, with the exception of one written comment received via electronic mail. *See* Amendment No. 1, *supra* note 3.

[10] *Id.*

[11] *Id.*

[12] *Id.*

[13] *Id.*

[14] *Id.*

SR–NYSE–00–12 and should be submitted by May 11, 2000.

## IV. Commission's Findings and Order Granting Approval of Proposed Rule Change

The Commission finds that the proposed rule change, as amended, is consistent with the requirements of the Act and the rules and regulations thereunder applicable to a national securities exchange, and in particular, with the requirements of Section 6(b)(5),[15] because the proposed rule is designed to promote just and equitable principles of trade, to remove impediments to, and perfect the mechanism of a free and open market and, in general, to protect investors and the public interest.[16]

Specifically, the Commission believes that the Exchange's proposed Affiliated Company listing standard and related continuing listing standard will permit the Exchange, without compromising the effectiveness of the Exchange's listing standards, to retain the listings of its issuer's carve-outs, spin-offs or ''tracking stocks'' that meet the requirements of the Affiliated Company standard. The Commission further believes that the proposed rule change, as amended, is consistent with the Exchange's obligation to remove impediments to and perfect the mechanism of a free and open market by providing the NYSE with greater flexibility in determining which equity securities warrant inclusion in its market. As such, the proposal should allow the Exchange to add listings based on the prospective entity's relationship with an NYSE listed company in good standing that otherwise might not qualify under its current original listing criteria.

The NYSE has requested that the Commission find good cause for approving the proposed rule change, as amended, prior to the thirtieth day after the date of publication of notice in the **Federal Register**. The Exchange requested that the Commission accelerate the effective date of the proposed rule change so that issuers engaged in transactions that would result in Affiliated Companies could avail themselves of the new standard by April 12, 2000.[17] The Commission believes that it is reasonable to permit the Exchange to implement the new standard by April 12, 2000, as it would allow issuers currently engaged in such transactions to avail themselves of the new listing standards after such date. Accordingly, the Commission finds good cause, consistent with Sections 6(b)(5) and 19(b)(2) of the Act,[18] to approve the proposed rule change, as amended, on an accelerated basis.

*It is therefore ordered,* pursuant to Section 19(b)(2) of the Act,[19] that the proposed rule change (SR–NSYE–00–12), as amended, is hereby approved on an accelerated basis.

For the Commission, by the Division of Market Regulation, pursuant to delegated authority.[20]

**Jonathan G. Katz,**

*Secretary.*

[FR Doc. 00–9916 Filed 4–19–00; 8:45 am]

BILLING CODE 8010–01–M

[15] 15 U.S.C. 78f(b)(5).

[16] In approving this rule, the Commission has considered its impact on efficiency, competition, and capital formation. 15 U.S.C. 78c(f).

[17] *See* Amendment No. 2, *supra* note 4.

[18] 15 U.S.C. 78f(b)(5) and 78s(b)(2).

[19] 15 U.S.C. 78s(b)(2).

[20] 17 CFR 200.30–3(a)(12).

---

## SECURITIES AND EXCHANGE COMMISSION

**[Release No. 34–42689; File No. SR–NYSE–99–30]**

## Self-Regulatory Organizations; Notice of Filing of Proposed Rule Change and Amendment Nos. 1, 2, and 3 Thereto by the New York Stock Exchange, Inc. Relating to NYSE's Procedures for Delisting a Security and Related Issuer Appeals

April 13, 2000.

Pursuant to Section 19(b)(1) of the Securities Exchange Act of 1934 (''Act''),[1] and Rule 19b–4 thereunder,[2] notice is hereby given that on June 23, 1999, the New York Stock Exchange, Inc. (''NYSE'' or ''Exchange'') filed with the Securities and Exchange Commission (''Commission'') the proposed rule change. The Exchange submitted Amendment No. 1 to its proposal on December 27, 1999,[3] Amendment No. 2 on March 9, 2000,[4] and Amendment No. 3 on March 26, 2000.[5] The proposed rule change is described in Items I, II, and III below, which Items have been prepared by the Exchange. The Commission is publishing this notice to solicit comments on the proposed rule change from interested persons.

## I. Self-Regulatory Organization's Statement of the Terms of Substance of the Proposed Rule Change

The proposed rule change consists of amendments to the Exchange's *Listed Company Manual* (''Manual'') and NYSE Rule 499 regarding the Exchange's procedures for delisting a security and the accompanying appeals process available to the issuer. The text of the proposed rule change follows. New text is *italicized* and deleted text is bracketed.

### 804.00 Procedure for Delisting

• If the Exchange staff should determine that a security be removed from the list, it will so notify the issuer in writing, describing the basis for such decision and the specific policy or criterion under which such action is to be taken. *The Exchange will simultaneously (1) issue a press release disclosing the company's status and basis for the Exchange's determination and (2) begin appending a suffix to the security's ticker symbol identifying the security's status.*

• *The* [Such] notice *to the issuer* shall also inform the issuer of its right to a *review of the determination by* [hearing before] a Committee of the Board of Directors of the Exchange (*comprised of a majority of public Directors*), provided a written request for such a *review* [hearing] is filed with the Secretary of the Exchange within *ten business* [twenty] days after receiving the aforementioned notice. *Such review will be conducted on the next monthly Review Day which is at least 25 business days from the date the request for review is filed with the Secretary of the Exchange. If the next Review Day is in less than 25 business days, the review will be scheduled for the following Review Day.*

[1] 15 U.S.C. 78s(b)(1).

[2] 17 CFR 240.19b–4.

[3] In Amendment No. 1, the Exchange withdrew its request for implementation of a pilot program on an accelerated basis, provided an opportunity for an issuer to request a hearing (which a committee could grant or deny), and added a specific day each month on which committee members would be available to conduct reviews. *See* letter from James E. Buck, Senior Vice President and Secretary, NYSE, to Richard Strasser, Assistant Director, Division of Market Regulation (''Division''), Commission, dated December 21, 1999 (''Amendment No. 1'').

[4] In Amendment No. 2, the Exchange proposed the following additional changes to: (1) give issuers ten business days in which to notify the Exchange of an intent to appeal: (2) run the notice and document submission time period consecutively; (3) expand the hearing cycle period from twenty business days to twenty-five business days; and (4) clarify in its rule language that the Committee would be comprised of a majority of public directors for purposes of delisting appeals. *See* letter from James E. Buck, Senior Vice President and Secretary, NYSE, to Richard Strasser, Assistant Director, Division, Commission, dated March 7, 2000 (''Amendment No. 2'').

[5] In Amendment No. 3, the Exchange made technical changes to its proposed rule language. *See* letter from James E. Buck, Senior Vice President and Secretary, NYSE to Belinda Blaine, Associate Director, Division, Commission, dated March 23, 2000 (''Amendment'').

• If the issuer does not request a *review* [hearing] within the specified period, *the Exchange shall suspend trading in the security and* an application shall be submitted by the Exchange [S]*s*taff to the Securities and Exchange Commission to strike the security from listing and a copy of such application shall be furnished to the issuer in accordance with Section 12 of the Securities Exchange Act of 1934 and the rules promulgated thereunder.

• If a *review* [hearing] is requested, the *review will be conducted by* [hearing will be held before] a Committee of the Board of Directors [, consisting of at least three public Directors and three industry Directors]. *A request for review will ordinarily stay the suspension of the subject security pending the review, but the Exchange staff may immediately suspend from trading any security pending review should it determine that such immediate suspension is necessary or appropriate in the public interest, for the protection of investors, or to promote just and equitable principles of trade.* [The issuer and the Exchange staff will be given at least 15 days written advance notice of the time and date of this hearing.]

• Any brief or memorandum dealing with the issuer's or the Exchange [S] *s*taff's position as well as any other written material which the aforementioned parties want the Committee to consider *must be received by* [should be submitted to] the Office of the General Counsel of the Exchange *within 17 business days from the date the issuer receives the notice of its right to a review* [at least ten days prior to the date of the hearing] so that such material can be furnished [for review] to the members of the Committee[, the issuer, and the Exchange Staff]. *Each party must also serve such materials on its counterparty simultaneously with the submission to the Office of the General Counsel of the Exchange. The counterparty service must be made in the same manner as such material is filed with the Office of the General Counsel of the Exchange.*

• *The Committee, in its sole discretion upon written motion or either party or upon its own motion, may extend any of the time periods specified above and may permit the parties to make oral presentations on their Review Day in accordance with such procedures as the Committee may specify at the time. If the Committee denies a request by either party to make an oral presentation, its reason for doing so must be included in its written decision on the review, which decision is provided to all parties.* [At the hearing,the issuer and the Exchange [S] *s*taff must prove their respective cases by presenting testimony, evidence, and argument to the Committee. Both parties may present any witnesses they wish and all those witnesses and parties who testify are subject to cross examination by the opposing side and questioning from the members of the Committee. The form and manner in which the actual hearing will be conducted will be established by the Committee so as to assure the orderly conduct of the proceeding. At the hearing, the Committee may require the parties to furnish additional written information which has come to its attention.]

• *If* [After the conclusion of the proceeding,] the Committee *decides* [shall make its decision. If said decision is] that the security of the issuer *should* be removed from listing, *the Exchange shall suspend trading in the security as soon as practicable and* an application shall be submitted by the Exchange to the Securities and Exchange Commission to strike the security from listing and registration and a copy of such application shall be furnished to the issuer in accordance with Section 12 of the Securities Exchange Act of 1934 and the rules promulgated thereunder. If the *Committee decides* [decision is] that the security should not be removed from listing, the issuer will receive from the Exchange a notice to that effect.

* * * * *

**807.00 Voluntary Transfer to Another Exchange by a Company that Falls Below Criteria for Continued Listing**

Where a company falls below the criteria for continued listing, the Exchange will permit the company, by action of its Board of Directors, to voluntarily transfer its listing, and/or its principal market to another national securities exchange and cooperate with the company and the other exchange in order to avoid any interruption in trading. *During this transition, the Exchange will append an identifier suffix to the ticker symbols of the securities of the issuer identifying the securities/status.*

* * * * *

NYSE Constitution and Rules

* * * * *

Delisting of Securities, Suspension From Dealings or Removal From List by Action of the Exchange

* * * * *

Rule 499 Securities admitted to the list may be suspended from dealings or removed from the list at any time.

* * * Supplementary Material:

* * * * *

*.70 Procedure for Delisting.—*

a. If [New Listings and Corporation Liaison] *the Exchange staff* should determine that a security be delisted, it will so notify the issuer in writing, describing the basis for such decision and the specific delisting policy or criteria under which such action is to be taken. *The Exchange will simultaneously (1) issue a press release disclosing the company's status and basis for the Exchange's determination and (2) begin appending a suffix to the security's ticker symbol identifying the security's status.* [Such] *The* notice *to the issuer* shall also inform the issuer of its right of a *review of the determination by* [hearing before] a Committee of the Board of Directors of the Exchange (*comprised of a majority of public Directors*), provided a written request for such *a review* [hearing] is filed with the Secretary of the Exchange within *ten business* [twenty] days after receiving the aforementioned notice. *Such a request will ordinarily stay the suspension of the subject security pending the review, but the Exchange may immediately suspend from trading any security pending review should it determine that suspension is necessary or appropriate in the public interest, for the protection of investors, or to promote just and equitable principles of trade.*

b. If the issuer does not request a *review* [hearing] within the specified period, *the Exchange shall suspend trading in the security and* an application shall be submitted by the Exchange to the Securities and Exchange Commission to strike the security from listing and a copy of such application shall be furnished to the issuer in accordance with Section 12 of the Securities Exchange Act of 1934 and the rules promulgated thereunder.

c. If a *review* [hearing] is requested, the [hearing will be held before] *review will be conducted by* a Committee of the Board of Directors[, consisting of at least three public Directors and three industry Directors. The issuer and New Listings and Corporate Liaison will be given at least fifteen days' written advance notice of the time and date of the aforesaid hearing]. *Such review will be conducted on the next monthly Review Day which is at least 25 business days from the date the request for review is filed with the Secretary of the Exchange. If the next Review Day is in less than 25 business days, the review will be scheduled for the following Review Day.*

d. Any brief or memorandum dealing with the issuer's or [New Listings and Corporate Liaison] *the Exchange staff*

position as well as any other written material which the aforementioned parties want the Committee to consider *must be received by* [should be submitted to] the Office of the General Counsel of the Exchange *within seventeen business days from the date the issuer receives the notice of its right to a review* [at least ten days prior to the date of the hearing] so that such material can be furnished [for review] to the members of the Committee[, the issuer, and New Listings and Corporate Liaison]. *Each party must also serve such materials on its counterparty simultaneously with the submission to the Office of the General Counsel of the Exchange. The counterparty service must be made in the same manner as such material is filed with the Office of the General Counsel of the Exchange.*

*e. The Committee, in its sole discretion upon written motion of either party or upon its own motion, may extend any of the time periods specified above and may permit the parties to make oral presentations on their Review Day in accordance with such procedures as the Committee may specify at the time. If the Committee denies a request by either party to make an oral presentation, its reason for doing so must be included in its written decision on the review, which decision is provided to all parties.*

[e. At the hearing, the issuer and New Listings and Corporate Liaison must prove their respective cases by presenting testimony, evidence, and argument to the Committee. Both parties may present any witnesses they wish and all those witnesses and parties who testify are subject to cross examination by the opposing side and questioning from the members of the Committee. The form and manner in which the actual hearing will be conducted will be established by the Committee so as to assure the orderly conduct of the proceeding. At the hearing, the Committee may require the parties to furnish additional written information which has come to its attention.]

f. *If* [After the conclusion of the proceeding,] the Committee *decides* [shall make its decision. If said decision is] that the security of the issuer be removed from listing, *the Exchange shall suspend trading in the security as soon as practicable and* and application shall be submitted by the Exchange to the Securities and Exchange Commission to strike the security from listing and a copy of such application shall be furnished to the issuer in accordance with Section 12 of the Securities Exchange Act of 1934 and the rules promulgated thereunder. If the *Committee decides* [decision is] that the security should not be removed from listing, the issuer will receive from the Exchange a notice to that effect.

## II. Self-Regulatory Organization's Statement of the Purpose of, and Statutory Basis for, the Proposed Rule Change

In its filing with the Commission, the Exchange included statements concerning the purpose of and basis for the proposed rule change and discussed any comments it received on the proposed rule change. The text of these statements may be examined at the places specified in Item IV below. The Exchange has prepared summaries set forth in Sections A, B, and C below, of the most significant aspects of such statements.

### *A. Self-Regulatory Organization's Statement of the Purpose of, and Statutory Basis for, the Proposed Rule Change*

1. Purpose

The purpose of the proposed rule change is to modify the Exchange's procedures with regard to (1) delisting a security and (2) the issuer's appeal. This proposed rule change both streamlines the appeal process and ensures notification to the public when the Exchange staff determines a security warrants the implementation of suspension and delisting procedures.

The Exchange has found that too much time sometimes elapses between identification of a company as not meeting the continued listing requirements and the suspension of its securities from trading, as well as between the suspension from trading of a security and the Exchange's subsequent application to the Commission to delist the security. In addition, the Board Committee that hears appeals of companies which have been suspended, has expressed concern that the delisting decision has often already been made and their oversight is more a review of staff decisions as opposed to consideration of an appeal by the company. The Exchange believes that it has already tightened its procedures regarding monitoring and delisting of companies falling below the Exchange's continued listing criteria in a filing that was approved by the Commission on June 9, 1999.[6] In addition, to expedite the Exchange's internal review process, the Committee for Review of the Exchange's Board of Directors, which hears delisting appeals by issuers, would be streamlined to consist of its Public Directors and one of its Industry Directors and would be permitted to meet by telephone without seeking the permission of the Chairman of the Board.

The Exchange also has determined that investors should be promptly informed if a company is identified as one that warrants commencement of suspension and delisting procedures. Thus, simultaneously with providing the company with notice and an opportunity to appeal, the Exchange proposes to issue a press release disclosing the status of the company and the rationale for the determination. The Exchange also proposes to append an identifier suffix to ticker symbols of securities that have been determined by Exchange staff as warranting suspension and delisting. Finally, in a change that both addresses the timing issue and responds to the anomaly of hearing an issuer's listing appeal *after* the suspension in trading, the appeal would also generally stay the suspension of trading. Reviews would be conducted on the next monthly review day, which is at least 25 business days from the date the issuer's request for review is filed with the Exchange.[7]

Specifically, with regard to the changes to the appeal process and the implementation of a press release requirement, the Exchange proposes to amend the Manual and NYSE Rule 499 as follows:

1. Implement a press release process triggered by a staff decision to suspend and delist security;

2. Clarify that a request for appeal would stay the suspension unless the staff determines that a stay is contrary to the interest of the public and investors;

3. Specify that issuers can request before the Committee for Review and that the Committee may grant or deny such request, provided that an explicit rationale for a denial is provided.[8]

4. Shorten the time periods relating to the appeal process such that (a) the issuer must notify the Exchange of its intent to appeal within ten business days of receiving notice that the Exchange staff has determined that its security should be delisted and (b) written submissions must be served within seventeen business days from the date the issuer received notice of its right to review,[9] and

5. Clarify that counterparty service is the responsibility of each party (not the Office of the General Counsel) and that

[6] *See* Securities Exchange Act Release No. 41502, 64 FR 32588 (June 17, 1999).

[7] *See* Amendment No. 2, *supra* note 4.

[8] *See* Amendment No. 1, *supra* note 3. The Committee's denial could ultimately be grounds for an appeal to the Commission. *Id.*

[9] *See* Amendment No. 2, *supra* note 4.

such service must be made in the same manner as service on the Office of the General Counsel.

With regard to the identifier suffix, the Exchange proposes to amend the Manual in two sections. First, Para. 804 would be amended to specify that once Exchange staff determines that a security should be removed from the list, the Exchange would not only issue the current requisite press release, but also would begin appending the identifier suffix to the security's ticker symbol to indicate that is has commenced proceedings to suspend and delist the security. Second, Para. 807 would be amended to specify that during a transition to another market, the identifier suffix would be appended.

2. Statutory Basis

The Exchange believes that the basis under the Act for the proposed rule change is the requirement under section 6(b)(5) [10] that an Exchange have rules that are designed to promote just and equitable principles of trade, to remove impediments to, and perfect the mechanism of a free and open market and, in general, to protect investors and the public interest.

*B. Self-Regulatory Organization's Statement on Burden on Competition*

The Exchange does not believe that the proposed rule change would impose any burden on competition that is not necessary or appropriate in furtherance of the purposes of the Act.

*C. Self-Regulatory Organization's Statement on Comments on the Proposed Rule Change From Members, Participants or Others*

The Exchange has neither solicited nor received written comments on the proposed rule change.

**III. Date of Effectiveness of the Proposed Rule Change and Timing for Commission Action**

Within 35 days of the date of publication of this notice in the **Federal Register** or within such longer period (i) as the Commission may designate up to 90 days of such date if it finds such longer period to be appropriate and publishes its reasons for so finding or (ii) as to which the self-regulatory organization consents, the Commission will:

(A) by order approve the proposed rule change, or

(B) institute proceedings to determine whether the proposed rule change should be disapproved.

[10] 15 U.S.C. 78f(b)(5).

**IV. Solicitation of Comments**

Interested persons are invited to submit written data, views and arguments concerning the foregoing, including whether the proposed rule change, as amended, is consistent with the Act. Persons making written submissions should file six copies thereof with the Secretary, Securities and Exchange Commission, 450 Fifth Street, N.W., Washington, D.C. 20549–0609. Copies of the submission, all subsequent amendments, all written statements with respect to the proposed rule change that are filed with the Commission, and all written communications relating to the proposed rule change between the Commission and any person, other than those that may be withheld from the public in accordance with the provisions of 5 U.S.C. 552, will be available for inspection and copying in the Commission's Public Reference Room in Washington, D.C. Copies of such filing will also be available for inspection and copying at the principal office of the Exchange. All submissions should refer to SR–NYSE–99–30 and should be submitted by May 11, 2000.

For the Commission, by the Division of Market Regulation, pursuant to delegated authority. [11]

**Jonathan G. Katz,**

*Secretary.*

[FR Doc. 00–9918 Filed 4–19–00; 8:45 am]

BILLING CODE 8010–01–M

## SMALL BUSINESS ADMINISTRATION

### Data Collection Available for Public Comments and Recommendations

**ACTION:** Notice and request for comments.

**SUMMARY:** In accordance with the Paperwork Reduction Act of 1995, this notice announces the Small Business Administration's intentions to request approval on a new, and/or currently approved information collection.

**DATES:** Submit comments on or before June 19, 2000.

**ADDRESSES:** Send all comments regarding whether this information collection is necessary for the proper performance of the function of the agency, whether the burden estimate is accurate, and if there are ways to minimize the estimated burden and enhance the quality of the collection, to Kenneth D. Simonson, Senior Economic Advisor, Office of Advocacy, Small Business Administration, 409 3rd Street, SW, Suite 7800, Washington, DC 20416.

**FOR FURTHER INFORMATION CONTACT:** Kenneth D. Simonson, Senior Economic Advisor, 202–205–6973 or Curtis B. Rich, Management Analyst, 202–205–7030.

**SUPPLEMENTARY INFORMATION:**

*Title:* ''Value of Worker Training Programs to Small Business''.

*Form No:* N/A.

*Description of Respondents:* Small and Large Businesses.

*Annual Responses:* 2,400.

*Annual Burden:* 1,244.

**Jacqueline White,**

*Chief, Administrative Information Branch.*

[FR Doc. 00–9852 Filed 4–19–00; 8:45 am]

BILLING CODE 8025–01–P

[11] 17 CFR 200.30–3(a)(12).

## DEPARTMENT OF TRANSPORTATION

### Coast Guard

**[USCG–2000–6942]**

### Commercial Fishing Safety Listening Sessions

**AGENCY:** Coast Guard, DOT.

**ACTION:** Notice of meeting; Change of location.

**SUMMARY:** The location of the Coast Guard Commercial Fishing Vessel Safety Action Plan Listening Session, on Saturday, May 20, 2000, from 10 a.m. to 2 p.m. has been changed. The meeting has been moved from the Italian American Club, 1903 Cabrillo Avenue, San Pedro, California to Canetti's Seafood Grotto, 309 East 22nd Street, San Pedro, California.

**FOR FURTHER INFORMATION CONTACT:** For questions on this notice, contact Lieutenant Jennifer Williams, or Ensign Chris O'Neal, telephone 202–267–2008, fax 202–267–0506.

**SUPPLEMENTARY INFORMATION:** Original notice of this meeting was published in the **Federal Register**, Volume 65, Number, March 16, 2000.

Dated: April 13, 2000.

**R.C. North,**

*Rear Admiral, U.S. Coast Guard, Assistant Commandant for Marine Safety and Environmental Protection.*

[FR Doc. 00–9936 Filed 4–19–00; 8:45 am]

BILLING CODE 4910–15–M

## DEPARTMENT OF TRANSPORTATION

### Maritime Administration

### Reports, Forms and Recordkeeping Requirements; Agency Information Collection Activity Under OMB Review

**AGENCY:** Maritime Administration, DOT.

**ACTION:** Notice and request for comments.

**SUMMARY:** In compliance with the Paperwork Reduction Act of 1995 (44 U.S.C. 3501 *et seq.*), this notice announces that the information collection abstracted below has been forwarded to the Office of Management and Budget (OMB) for review and comment. Described below is the nature of the information collection and its expected burden. The **Federal Register** notice with a 60-day comment period soliciting comments on the following collection was published in 65 FR 645, January 5, 2000. Comments were received and addressed by MARAD.

**DATES:** Comments must be submitted on or before May 22, 2000.

**FOR FURTHER INFORMATION CONTACT:** John T. Marquez, Jr., Office of the Chief Counsel, Maritime Administration, 400 Seventh Street, SW, Room 7228, Washington, DC 20590, telephone number 202–366–5320. Copies of this collection can also be obtained from that office.

**SUPPLEMENTARY INFORMATION:** Maritime Administration.

*Title of Collection:* ''Eligibility of U.S.-Flag Vessels of 100 Feet or Greater In Registered Length to Obtain a Fishery Endorsement to the Vessel's Documentation''.

*OMB Control Number:* 2133–NEW.

*Type of Request:* Approval of a new information collection.

*Affected Public:* Vessel Owners, Charterers, Mortgagees, Mortgage Trustees, and Vessel Managers of vessels of 100 feet or greater in registered length for which a fishery endorsement to the vessel's documentation is being sought.

*Form(s):* None.

*Abstract:* In accordance with the American Fisheries Act of 1998 (AFA), owners of vessels of 100 feet or greater in registered length who wish to obtain a fishery endorsement to the vessel's documentation will be required to file an Affidavit of United States Citizenship demonstrating that they comply with the requirements of section 2 of the Shipping Act of 1916, 46 App. U.S.C. 802. Other documentation to be submitted with the Affidavit includes a copy of the Articles of Incorporation, Bylaws or other comparable documents, a description of any management agreements entered into with Non-Citizens, a certification that any management contracts with Non-Citizens do not convey control in a fishing vessel, fish processing vessel, or fish tender vessel to a Non-Citizen, and a copy of any time charters or voyage charters with Non-Citizens.

The information collection is necessary for MARAD to determine that a given vessel is owned and controlled by Citizens of the United States in accordance with the requirements of the AFA and, therefore, is eligible to be documented with a fishery endorsement to its documentation. The information may also be used to determine whether the vessel owner, charterer, processor or other entity has violated harvesting and processing caps imposed under section 210(e)(1) and (2) of the AFA, and whether there is a conflict with an international treaty or agreement that would result in an exemption from the requirements of the rule for a particular vessel owner or mortgagee.

*Annual Estimated Burden Hours:* 2950 hours.

**ADDRESSES:** Send comments to the Office of Information and Regulatory Affairs, Office of Management and Budget, 725 17th Street, NW, Washington, DC 20503, Attention MARAD Desk Officer.

*Comments Are Invited On:* Whether the proposed collection of information is necessary for the proper performance of the functions of the Department, including whether the information will have practical utility; the accuracy of the Department's estimate of the burden of the proposed information collection; ways to enhance the quality, utility and clarity of the information to be collected; and ways to minimize the burden of the collection of information on respondents, including the use of automated collection techniques or other forms of information technology. A comment to OMB is best assured of having its full effect if OMB receives it within 30 days of publication.

Dated: April 17, 2000.

**Edmund T. Sommer, Jr.,**

*Acting Secretary, Maritime Administration.*

[FR Doc. 00–9933 Filed 4–19–00; 8:45 am]

BILLING CODE 4910–81–P

## DEPARTMENT OF THE TREASURY

### Submission for OMB Review; Comment Request

April 10, 2000.

The Department of Treasury has submitted the following public information collection requirement(s) to OMB for review and clearance under the Paperwork Reduction Act of 1995, Public Law 104–13. Copies of the submission(s) may be obtained by calling the Treasury Bureau Clearance Officer listed. Comments regarding this information collection should be addressed to the OMB reviewer listed and to the Treasury Department Clearance Officer, Department of the Treasury, Room 2110, 1425 New York Avenue, NW., Washington, DC 20220.

**DATES:** Written comments should be received on or before May 22, 2000 to be assured of consideration.

**Internal Revenue Service (IRS)**

*OMB Number:* 1545–1672.

*Regulation Project Number:* REG–209135–88 NPRM and Temporary.

*Type of Review:* Extension.

*Title:* Certain Asset Transfers to Regulated Investment Companies (RICs) and Real Estate Investment Trusts (REITs).

*Description:* The regulation applies with respect to the net built-in gain of C corporation assets that become assets of a Regulated Investment Company (RIC) or Real Estate Investment Trust (REIT) by the qualification of a C corporation as a RIC or REIT or by the transfer of assets of a C corporation to a RIC or REIT in a carryover basis transaction. The regulation generally requires the corporation to recognize gain as if it had sold the assets at fair market value and immediately liquidated. The regulations permit the transferee RIC or REIT to elect, in lieu of liquidation treatment, to be subject to the rules of section 1374 of the Internal Revenue Code and the regulations thereunder. In order to obtain the benefit of a section 1374 election, the taxpayer is required to make a statement indicating that it elects to be subject to the rules of section 1374 and the regulations thereunder.

*Estimated Number of Respondents:* 100.

*Estimated Burden Hours Per Respondent:* 30 minutes.

*Frequency of Response:* Other (once).

*Estimated Total Reporting Burden:* 50 hours.

*Clearance Officer:* Garrick Shear, Internal Revenue Service, Room 5244, 1111 Constitution Avenue, NW, Washington, DC 20224.

*OMB Reviewer:* Alexander T. Hunt, (202) 395–7860, Office of Management and Budget, Room 10202, New

Executive Office Building, Washington, DC 20503.

**Lois K. Holland,**

*Departmental Reports Management Officer.*

[FR Doc. 00–9871 Filed 4–19–00; 8:45 am]

BILLING CODE 4830–01–P

## DEPARTMENT OF THE TREASURY

### Submission for OMB Review; Comment Request

April 11, 2000.

The Department of Treasury has submitted the following public information collection requirement(s) to OMB for review and clearance under the Paperwork Reduction Act of 1995, Public Law 104–13. Copies of the submission(s) may be obtained by calling the Treasury Bureau Clearance Officer listed. Comments regarding this information collection should be addressed to the OMB reviewer listed and to the Treasury Department Clearance Officer, Department of the Treasury, Room 2110, 1425 New York Avenue, NW., Washington, DC 20220.

**DATES:** Written comments should be received on or before May 22, 2000 to be assured of consideration.

**Internal Revenue Service (IRS)**

*OMB Number:* 1545–0887.

*Form Number:* IRS Form 8281.

*Type of Review:* Extension.

*Title:* Information Return for Publicly Offered Original Issue Discount Instruments.

*Description:* Form 8281 is filed by the issuer of a publicly offered debt instrument having Original Issue Discount (OID). The information is used to update Publication 1212, ''List of Original Issue Discount Instruments.

*Estimated Number of Respondents/Recordkeepers:* 500.

ESTIMATED BURDEN HOURS PER RESPONDENT/RECORDKEEPER

| | |
|---|---|
| Recordkeeping | 5 hr., 1 min. |
| Learning about the law or the form. | 30 min. |
| Preparing, copying, assembling, and sending the form to the IRS. | 37 min. |

*Frequency of Response:* On occasion, Annually.

*Estimated Total Reporting/Recordkeeping Burden:* 3,065 hours.

*OMB Number:* 1545–1518.

*Form Number:* IRS Form 5498–MSA.

*Type of Review:* Extension.

*Title:* MSA or Medicate+Choice MSA Information.

*Description:* Form 5498–MSA is used to report contributions to a medical savings account as set forth in section 220(h).

*Estimated Number of Respondents:* 16,442.

*Estimated Burden Hours Per Respondent:* 10 minutes.

*Frequency of Response:* Annually.

*Estimated Total Reporting Burden:* 6,988 hours.

*Clearance Officer:* Garrick Shear, Internal Revenue Service, Room 5244, 1111 Constitution Avenue, NW, Washington, DC 20224.

*OMB Reviewer:* Alexander T. Hunt (202) 395–7860, Office of Management and Budget, Room 10202, New Executive Office Building, Washington, DC 20503.

**Lois K. Holland,**

*Departmental Reports Management Officer.*

[FR Doc. 00–9872 Filed 4–19–00; 8:45 am]

BILLING CODE 4830–01–P

## DEPARTMENT OF THE TREASURY

### Submission for OMB Review; Comment Request

April 13, 2000.

The Department of Treasury has submitted the following public information collection requirement(s) to OMB for review and clearance under the Paperwork Reduction Act of 1995, Public Law 104–13. Copies of the submission(s) may be obtained by calling the Treasury Bureau Clearance Officer listed. Comments regarding this information collection should be addressed to the OMB reviewer listed and to the Treasury Department Clearance Officer, Department of the Treasury, Room 2110, 1425 New York Avenue, NW., Washington, DC 20220.

**DATES:** Written comments should be received on or before May 22, 2000 to be assured of consideration.

**Internal Revenue Service (IRS)**

*OMB Number:* 1545–1605.

*Revenue Ruling Number:* Revenue Ruling 2000–8.

*Type of Review:* Extension.

*Title:* Negative Elections in Section 401(k) Plans.

*Description:* Revenue Ruling 2000–8 describes certain criteria that must be met before an employee's compensation can be reduced and contributed to an employer's section 401(k) plan in the absence of an affirmative election by the employee.

*Estimated Number of Respondents:* 1,500.

*Estimated Burden Hours Per Respondent:* 1 hour, 10 minutes.

*Frequency of Response:* On occasion, Annually.

*Estimated Total Reporting Burden:* 1,750 hours.

*OMB Number:* 1545–1673.

*Revenue Procedure Number:* Revenue Procedure 2000–16.

*Type of Review:* Extension.

*Title:* Employee Plans Compliance Resolution System.

*Description:* The information requested in this revenue procedure is required to enable the Commissioner, Tax Exempt and Government Entities Division of the Internal Revenue Service to make determinations on the issuance of various types of closing agreements and compliance statements. The issuance of these agreements and statements allows individual plans to maintain their tax-qualified status. As a result, the favorable tax treatment of the benefits of the eligible employees is retained.

*Estimated Number of Respondents/Recordkeepers:* 4,242.

*Estimated Burden Hours Per Respondent/Recordkeeper:* 14 hours, 32 minutes.

*Frequency of Response:* On occasion.

*Estimated Total Reporting Burden:* 61,697 hours.

*OMB Number:* 1545–1674.

*Revenue Procedure Number:* Revenue Procedure 2000–20.

*Type of Review:* Extension.

*Title:* Master and Prototype Plans.

*Description:* The master and prototype revenue procedure sets forth the procedures for sponsors of master and prototype pension, profit-sharing and annuity plans to request an opinion letter from the Internal Revenue Service that the form of a master or prototype plan meets the requirements of section 40(a) of the Internal Revenue Code. The information requested in sections 5.14, 9.11, 12.02, 12.03, 15.02, 17.02, 18.06, 19.02 and 19.09 of the master and prototype procedure is in addition to the information required to be submitted with Forms 4461 (Application for Approval of Master or Prototype and Regional Prototype Defined Contribution Plan); 4461–A (Application for Approval of Master or Prototype and Regional Prototype Defined Benefit Plan); and 4461–B (Application for Approval of Master or Prototype Plan (Mass Submitter Adopting Sponsor)). The information is needed in order to enable the Employee Plans function of the Service's Tax Exempt and Government Entities Division to issue an opinion letter.

*Estimated Number of Respondents:* 266,530.

*Estimated Burden Hours Per Respondent:* 1 hour, 32 minutes.

*Frequency of Response:* On occasion.

*Estimated Total Reporting Burden:* 408,563 hours.

*Clearance Officer:* Garrick Shear, Internal Revenue Service, Room 5244, 1111 Constitution Avenue, NW, Washington, DC 20224.

*OMB Reviewer:* Alexander T. Hunt (202) 395–7860, Office of Management and Budget, Room 10202, New Executive Office Building, Washington, DC 20503.

**Lois K. Holland,**

*Departmental Reports Management Officer.*

[FR Doc. 00–9873 Filed 4–19–00; 8:45 am]

BILLING CODE 4830–01–P

## DEPARTMENT OF THE TREASURY

### Treasury Advisory Committee on Commercial Operations of the U.S. Customs Service; Meeting

**AGENCY:** Department Offices, Treasury.

**ACTION:** Notice of meeting.

**SUMMARY:** This notice announces the date and time for the next meeting and the provisional agenda for consideration by the Committee.

**DATES:** The next meeting of the Treasury Advisory Committee on Commercial Operations of the U.S. Customs Service will be held on Friday, May 5, 2000 at 8:30 a.m. at the Seaport Hotel, One Seaport Lane, Boston, MA 02210, Tel.: (617) 385–4000 or 1–877–SEAPORT. The duration of the meeting will be approximately four hours.

**FOR FURTHER INFORMATION CONTACT:** Dennis M. O'Connell, Director, Office of Tariff and Trade Affairs, Office of the Under Secretary (Enforcement), Room 4004, Department of the Treasury, 1500 Pennsylvania Avenue, N.W., Washington, D.C. 20220. Tel.: (202) 622–0220. Final meeting details, including the meeting time, location, and agenda, can be confirmed by contacting the office indicated above one week prior to the meeting date.

**Agenda**

At the May 5, 2000 session, the regular quarterly meeting of the Advisory Committee, the Committee is expected to pursue the following agenda. The agenda may be modified prior to the meeting.

1. Reports on Subcommittee progress:
   (a) Study of Merchandise Processing Fee
   (b) Study of Compliance Assessment Team (CAT) methodology
2. Customs entry procedure revision project (ERP)
3. Update on Automation
4. Status of the ''Tin Man'' in-bond program and discussion of the results of the statistical sampling.

**SUPPLEMENTARY INFORMATION:** The meeting is open to the public; however, participation in the Committee's deliberations is limited to Committee members and Customs and Treasury Department staff. A person other than an Advisory Committee member who wishes to attend the meeting should give advance notice by contacting Theresa Manning at (202) 622–0220, no later than April 28, 2000.

Dated: April 14, 2000.

**Dennis M. O'Connell,**

*Acting Deputy Assistant Secretary (Regulatory, Tariff, and Trade Enforcement).*

[FR Doc. 00–9879 Filed 4–19–00; 8:45 am]

BILLING CODE 4810–25–M

## DEPARTMENT OF THE TREASURY

### Internal Revenue Service

### Privacy Act of 1974, as Amended; System of Records

**AGENCY:** Internal Revenue Service, Treasury.

**ACTION:** Notice of Proposed New Privacy Act System of Records.

**SUMMARY:** The Treasury Department, Internal Revenue Service, gives notice of a proposed new system of records entitled ''Criminal Investigation Audit Trail Records System—Treasury/IRS 46.051,'' which is subject to the Privacy Act of 1974, 5 U.S.C. 552a. This proposed system has been developed to enable the Criminal Investigation Division to analyze computer system usage and identify potential security violations. It is further proposed to have the system exempt from meeting certain requirements of the Privacy Act of 1974.

**DATES:** Comments must be received no later than May 22, 2000. This new system of records will be effective May 30, 2000, unless comments are received which result in a contrary determination.

**ADDRESSES:** Comments should be sent to the Office of Governmental Liaison and Disclosure, Internal Revenue Service, 1111 Constitution Avenue, NW, Washington, DC 20224. Comments will be made available for inspection and copying in the Freedom of Information Reading Room upon request.

**FOR FURTHER INFORMATION CONTACT:** Fu-An Chao, Chief, Systems Development and Support, Criminal Investigation, (202) 622–7803.

**SUPPLEMENTARY INFORMATION:** The Internal Revenue Service's Criminal Investigation Division seeks to establish and maintain the proposed new system of records as a more comprehensive means of performing its responsibilities.

Criminal Investigation carries out many law enforcement related functions. Among Criminal Investigation's principal responsibilities are investigating and referring for prosecution criminal cases, centering largely on violations of tax laws, including income tax evasion, refund fraud, and other crimes contributing to the federal tax gap. Criminal Investigation also investigates violations of certain money laundering laws.

Many of these law enforcement related functions have been automated and are available on Criminal Investigation computer systems. To ensure the integrity of the system data, audit records are maintained to identify all events that occur while users attempt to access or use the computer system or the applications. This system will identify the sequence of events that occurred while an individual is logged onto the system.

Due to the nature of information collected, the Criminal Investigation Audit Trail Records System will automatically identify law enforcement related information.

The Criminal Investigation Audit Trail Records System produces an output record that identifies user names, times logged into the system, and sequences of events which occurred, while logged into the system, or attempting to log onto the system, and investigatory files accessed. Once the output record is created, it is sent to the National Office for review. This enables the security staff to determine if any irregular activities or patterns are occurring. Individuals who are detected by the audit logs of irregular activities or patterns may be adversely affected up to and including prosecution for unauthorized access to government records.

The Internal Revenue Service is giving public notice of a proposed rule to exempt this system of records from certain provisions of 5 U.S.C. 552a pursuant to subsections (j)(2) and (k)(2). A proposed rule is being published separately in the **Federal Register**. The exemption is intended to comply with legal prohibitions against the disclosure of certain kinds of information and to protect certain information on individuals maintained in this system of records.

The new system of records report, as required by 5 U.S.C. 552a (r) of the Privacy Act, has been submitted to the Committee on Government Reform in the House of Representatives, the

Committee on Governmental Affairs in the Senate, and the Office of Management and Budget, pursuant to Appendix I to OMB Circular A–130, ''Federal Agency Responsibilities for Maintaining Records About Individuals,'' dated February 8, 1996.

The proposed IRS system of records, ''Criminal Investigation Audit Trail Records System—Treasury /IRS 46.051,'' is published in its entirety below.

Dated: March 7, 2000.

**Shelia Y. McCann,**

*Deputy Assistant Secretary (Administration).*

## Treasury /IRS 46.051

### SYSTEM NAME:

Criminal Investigation Audit Trail Records System—Treasury /IRS 46.051

### SYSTEM LOCATION:

Records are located at the Internal Revenue Service, 1111 Constitution Avenue, NW, Washington, DC 20224. Other locations of these records are: Automated Criminal Investigation Project Office, located in Florence, Kentucky; Internal Revenue Service Areas of Investigation, Criminal Investigation District Offices, and Internal Revenue Service Posts of Duty. (See IRS Appendix A for addresses.)

### CATEGORIES OF INDIVIDUALS COVERED BY THE SYSTEM:

Individuals who use or attempt to use the IRS Criminal Investigation computer systems; log onto the Criminal Investigation system; use the Criminal Investigation applications; use the Criminal Investigation operating system, or log off the Criminal Investigation computer are covered by this system.

### CATEGORIES OF RECORDS IN THE SYSTEM:

This is an electronic data base which captures system use information such as: date and time a user initiated or attempted to initiate a session on the system; date and time of all unsuccessful system accesses; date and time of data or system file accesses; date and time of privileged security actions on the system, and date and time of system logoff by a user.

Criminal Investigation application audit trail records may contain information regarding system or application access for any of the following Criminal Investigation files: CIMIS, 46.002; Confidential Informants, Criminal Investigation Division, 46.003; Electronic Surveillance File, 46.005; and Centralized Evaluation and Processing of Information Items, 46.009.

### AUTHORITY FOR MAINTENANCE OF THE SYSTEM:

5 U.S.C. 301; 26 U.S.C. 6103, 7213, 7213A, 7214, 7602, 7608, 7801, and 7803; 18 U.S.C. 1030(a)(2)(B).

### PURPOSE:

The Criminal Investigation Division of the Internal Revenue Service established this system to enable the division to monitor and analyze usage of its computer system. The system will provide information showing: (1) The system users; (2) the times of use for each user; (3) the areas of the system being accessed by each user; (4) unauthorized access by Criminal Investigation employees; and (5) access, or attempted access, by persons other than Criminal Investigation employees. System uses include reading, adding, deleting, and/or modifying data and system records.

### ROUTINE USES OF RECORDS MAINTAINED IN THE SYSTEM, INCLUDING CATEGORIES OF USERS AND THE PURPOSES OF SUCH USE:

Disclosure of records and information from this system may be disclosed only as provided by 26 U.S.C. 6103 and 18 U.S.C. 1030(a)(2)(B). Records other than returns and return information may be used:

(1) To disclose pertinent information to appropriate federal, state, local, or foreign agencies responsible for investigating or prosecuting the violation or potential violation of civil or criminal law or regulations.

(2) To disclose information in a proceeding before a court, adjudicative body, or other administrative body before which the agency is authorized to appear when: (a) The agency, or (b) any employee of the agency in his or her official capacity, or (c) any employee of the agency in his or her individual capacity where the Department of Justice or the agency has agreed to represent the employee, or (d) the United States, when the agency determines that litigation is likely to affect the agency, is a party to litigation or has an interest in such litigation, and the use of such records by the agency is deemed to be relevant and necessary to the litigation or administrative proceeding and not otherwise privileged.

(3) To provide information to a congressional office in response to an inquiry made at the request of the individual to whom the record pertains.

(4) To provide information to third parties during the course of an investigation to the extent necessary to obtain information pertinent to the investigation.

(5) To provide information to unions recognized as exclusive bargaining representatives under the Civil Service Reform Act of 1978, 5 U.S.C. 7111 and 7114, the Merit Systems Protection Board, arbitrators, the Federal Labor Relations Authority, and other parties responsible for the administration of federal labor actions or grievances or conducting administrative hearings or appeals or if needed in the performance of other authorized duties.

(6) To disclose to the Department of Justice for the purpose of litigating an action or seeking legal advice.

(7) To disclose to a defendant in a criminal prosecution, the Department of Justice, or a court of competent jurisdiction where required in criminal discovery or by the Due Process Clause of the Constitution.

### POLICIES AND PRACTICES FOR STORING, RETRIEVING, ACCESSING, RETAINING, AND DISPOSING OF RECORDS IN THE SYSTEM:

#### STORAGE:

Electronic and magnetic media and paper.

#### RETRIEVABILITY:

Records are retrievable by user name.

#### SAFEGUARDS:

Protection and control of any sensitive but unclassified information or records are in accordance with Department of the Treasury Security Manual, TD P 71–10 and Internal Revenue Manual, IRM 2.1.10, Automated Information System Security, and Internal Revenue Manual, IRM 1(16)00, Physical Security Handbook, as well as internal CI Policy. The Criminal Investigation Audit Trail Records System is contained in an operating system, which has been rated as C2 compliant. All system access is controlled with the use of passwords and only Criminal Investigation personnel who have been assigned a ''need-to-know'' can access system data. The computers that operate the System are in secure space, housed in a Federal Building with 24-hour security.

#### RETENTION AND DISPOSAL:

Records are maintained, administered and disposed of in accordance with Internal Revenue Manual (IRM) 1.15; 1.15.1 Records Administration Handbook, 1.15.2 Records Disposition Handbook, 1.15.3 General Records Handbook, and 1.15.4 Files Management Handbook.

#### SYSTEM MANAGER(S) AND ADDRESS:

The official prescribing policies and practices is the Assistant Commissioner, Criminal Investigation, Internal Revenue Service, 1111 Constitution Avenue, NW, Washington, DC, 20224. The

organization responsible for maintaining the system is Systems Development and Support, Criminal Investigation Representative.

**NOTIFICATION PROCEDURE:**

This system of records may not be accessed for purposes of determining if the system contains a record pertaining to a particular individual.

**RECORD ACCESS PROCEDURES:**

This system of records may not be accessed for purposes of inspection by an individual to determine if there exists a record pertaining to him or her, and/or to view the contents of the records.

**CONTESTING RECORD PROCEDURES:**

26 U.S.C. 7852(e) prohibits Privacy Act amendment of tax records.

**RECORD SOURCE CATEGORIES:**

This system of records contains investigatory material compiled for law enforcement purposes whose sources need not be reported.

**EXEMPTIONS CLAIMED FOR THE SYSTEM:**

This system is exempt from 5 U.S.C. 552a(c)(3), (c)(4), (d)(1), (d)(2), (d)(3), (d)(4), (e)(1), (e)(2), (e)(3), (e)(4)(G), (H), and (I), (e)(5), (e)(8), (f), and (g) of the Privacy Act pursuant to 5 U.S.C. 552a(j)(2), and (k)(2).

[FR Doc. 00–9870 Filed 4–19–00; 8:45 am]

BILLING CODE 4830–01–P

## DEPARTMENT OF VETERANS AFFAIRS

### Advisory Committee on Prosthetics and Special-Disabilities Programs; Notice of Meeting

The Department of Veterans Affairs (VA) gives notice under Public Law 92–463 that a meeting of the Advisory Committee on Prosthetics and Special-Disabilities Programs (Committee) will be held Monday and Tuesday, May 8–9, 2000, at VA Headquarters, Room 930, 810 Vermont Avenue, NW, Washington, D.C. The May 8 session will convene at 8:00 a.m. and adjourn at 4 p.m. and the May 9 session will convene at 8:00 a.m. and adjourn at 12:00 noon. The purpose of the Committee is to advise the Department on its prosthetic programs designed to provide state-of-the-art prosthetics and the associated rehabilitation research, development, and evaluation of such technology. The Committee also advises the Department on special disability programs which are defined as any program administered by the Secretary to serve veterans with spinal cord injury, blindness or vision impairment, loss of or loss of use of extremities, deafness or hearing impairment, or other serious incapacities in terms of daily life functions.

On the morning of May 8, the Committee will receive briefings by the National Program Directors of the Special-Disabilities Programs regarding the status of their activities over the last seven months. In the afternoon, a GAO representative will give a briefing on the GAO Draft Report regarding VA Health Care: Better Data and Accountability Needed For Care for Disabled Veterans. On the morning of May 9, the Committee will review the final draft report on implementation of the Veterans' Health Care Eligibility Reform Act of 1996 as it pertains to the legislative requirement to maintain capacity to meet specialized needs of disabled veterans. The Committee will have the opportunity to ask questions and provide input to the final draft report.

The meeting is open to the public. For those wishing to attend, contact Kathy Pessagno, Veterans Health Administration (113), phone (202) 273–8512, Department of Veterans Affairs, 810 Vermont Avenue, NW, Washington, D.C. 20420, prior to May 5, 2000.

Dated: April 5, 2000.

**Marvin Eason,**

*Committee Management Officer.*

[FR Doc. 00–9858 Filed 4–19–00; 8:45 am]

BILLING CODE 8320–01–M

## DEPARTMENT OF VETERANS AFFAIRS

### Special Medical Advisory Group, Notice of Availability of Annual Report

Under Section 10(d) of Public Law 92–463 (Federal Advisory Committee Act), notice is hereby given that the Annual Report of the Department of Veterans Affairs Special Medical Advisory Group for Fiscal Year 1999 has been issued.

The report summarizes activities of the Group relative to the care and treatment of disabled veterans and other matters pertinent to the Department of Veterans Affairs, Veterans Health Administration. It is available for public inspection at two locations:

Federal Documents Section, Exchange and Gift Division, LM 632, Library of Congress, Washington, D.C. 20540

and

Department of Veterans Affairs, Office of the Under Secretary for Health, VA Central Office, Room 805, 810 Vermont Avenue, N.W., Washington, D.C. 20420

Dated: April 3, 2000.

By Direction of the Secretary.

**Marvin R. Eason,**

*Committee Management Officer.*

[FR Doc. 00–9857 Filed 4–19–00; 8:45 am]

BILLING CODE 8320–01–M

# Corrections

Federal Register
Vol. 65, No. 77
Thursday, April 20, 2000

This section of the FEDERAL REGISTER contains editorial corrections of previously published Presidential, Rule, Proposed Rule, and Notice documents. These corrections are prepared by the Office of the Federal Register. Agency prepared corrections are issued as signed documents and appear in the appropriate document categories elsewhere in the issue.

## DEPARTMENT OF AGRICULTURE

### 5 CFR Chapter LXXIII

**RIN 3209-AA15**

### Supplemental Standards of Ethical Conduct for Employees of the Department of Agriculture

*Correction*

In rule document 00–7275 beginning on page 15825 in the issue of Friday, March 24, 2000, make the following correction:

**§8301.103 [Corrected]**

On page 15830, i § 8301.103(d)(2), in the first column, in the third line ''(l)(1)'' should read ''(d)(1)''.

[FR Doc. C0–7275 Filed 4–19–00; 8:45 am]

BILLING CODE 1505–01–D

## SECURITIES AND EXCHANGE COMMISSION

**[Release No. 34-42516 / March 10, 2000, File No. 4-430]**

### Order Extending the Deadline for Compliance with Portions of the Commission's January 28, 2000, Order Directing the Exchanges and the National Association of Securities Dealers, Inc. to Submit a Decimalization Implementation Plan Pursuant to Section 11A(a)(3)(B) of the Securities Exchange Act of 1934

*Correction*

In notice document 00–6608, appearing on page 14637, in the issue of Friday, March 17, 2000, make the following correction:

On page 14637, in the second column, the docket number is corrected to read as set forth above.

[FR Doc. C0– 6608 Filed 4–19–00; 8:45 am]

BILLING CODE 1505–01–D

Federal Register

Thursday,
April 20, 2000

# Part II

# Office of Management and Budget

## North American Industry Classification System—Update for 2002; Notice

## OFFICE OF MANAGEMENT AND BUDGET

### North American Industry Classification System—Update for 2002

**AGENCY:** Office of Management and Budget, Executive Office of the President.

**ACTION:** Notice of solicitation of comments on the Economic Classification Policy Committee's recommendations for the 2002 revision of the North American Industry Classification System.

**SUMMARY:** Under Title 44 U.S.C. 3504(e), the Office of Management and Budget (OMB) seeks public comment on the advisability of adopting the proposed North American Industry Classification System (NAICS) updates for 2002. OMB's Economic Classification Policy Committee (ECPC) recommends an update of the industry classification system to extend the harmonized three-country classification structure to construction and to recognize important changes in the retail trade and information sectors. In addition, as an interim measure in the United States, the ECPC recommends restructuring of the Wholesale Trade sector to reflect differences in production functions and to capture more accurately the rapidly-growing business-to-business electronic markets developing in the United States.

This notice: (1) Summarizes the background for the proposed revisions to NAICS 1997 in Part I; (2) contains a summary of public comments in Part II; (3) details the proposed structure changes agreed upon by the three countries in Part III; and (4) provides a comprehensive listing of proposed changes for national industries and their link to NAICS 1997 industries in Part IV.

OMB published a notification of intention to complete portions of NAICS in a February 25, 1999, **Federal Register** notice (64 FR 9416–9419). That notice solicited comments on the advisability of revising the NAICS 1997 structure for 2002 and solicited comments on the creation of new industries in the Construction and Wholesale Trade Sectors, modifications to the national industries for department stores and nonstore retailers, and other changes identified as necessary during the initial implementation of NAICS 1997. The deadline for submitting comments was April 26, 1999.

After considering all proposals from the public, consulting with a large number of U.S. data users and industry groups, and undertaking extensive discussions with Statistics Canada and Mexico's Instituto Nacional de Estadística, Geografía e Informática (INEGI), the ECPC, INEGI, and Statistics Canada developed a revised structure for both the Construction and Information sectors of NAICS that would apply to all three North American countries.

For Wholesale Trade, after extensive discussions with Statistics Canada and INEGI, the representatives of the three countries' statistical agencies decided to delay three-country changes to this sector and instead plan for a complete restructuring of the distribution network industries (wholesale, retail, transportation, and warehousing) in 2007. In the interim the ECPC recommends restructuring the Wholesale Trade sector to reflect differences in production functions between those wholesalers that take title to goods and those that do not, and to capture more accurately the rapidly-growing business-to-business electronic markets developing in the United States. The ECPC also developed proposed additional U.S. industry detail in the Retail Trade sector for NAICS United States. The ECPC recommends that NAICS United States 2002 incorporate these changes as shown in Parts III and IV.

Following an extensive process of development and discussions by the ECPC, with maximum possible public input, OMB seeks comment on the advisability of revising NAICS to incorporate the changes published in this notice. The modified NAICS would be employed in relevant data collections by all U.S. statistical agencies beginning with the reference year 2002. Statistics Canada and INEGI are recommending acceptance of the proposed revision of the NAICS system for industry classification in the statistical programs of their national systems and are seeking comments in their respective countries. Representatives of the three countries will hold further discussions to consider public comments that they receive.

**DATES:** To ensure consideration of comments on the adoption and implementation of the NAICS revisions detailed in this notice, comments must be in writing. You should submit them as soon as possible, but no later than June 19, 2000. This proposed revision to NAICS would become effective in the U.S. on January 1, 2002.

**ADDRESSES:** You should send correspondence about the adoption and implementation of NAICS revisions as shown in this **Federal Register** notice to: Katherine K. Wallman, Chief Statistician, Office of Management and Budget, 10201 New Executive Office Building, Washington, DC 20503, telephone number: (202) 395–3093, FAX number: (202) 395–7245.

You should address inquiries about the content of industries or requests for electronic copies of the tables to: Carole Ambler, Chair, Economic Classification Policy Committee, Bureau of the Census, Room 2633–3, Washington, DC 20233, telephone number: (301) 457–2668, FAX number: (301) 457–1343.

*Electronic Availability and Comments:* This document is available on the Internet from the Census Bureau via WWW browser and E-mail. To obtain this document via WWW browser, connect to http://www.census.gov/naics. This WWW page also contains previous NAICS **Federal Register** notices and related documents.

You may send comments via E-mail to pbugg@omb.eop.gov with subject NAICS02. OMB will include in the official record comments received via E-mail at this address with this subject by the date specified above.

**FOR FURTHER INFORMATION CONTACT:** Paul Bugg, 10201 New Executive Office Building., Washington, DC 20503, E-mail address: pbugg@omb.eop.gov, telephone number: (202) 395–3093, FAX number: (202) 395–7245.

**SUPPLEMENTARY INFORMATION:**

### Part I: Background of NAICS 1997

NAICS is a system for classifying establishments by type of economic activity. Its purposes are: (1) To facilitate the collection, tabulation, presentation, and analysis of data relating to establishments, and (2) to promote uniformity and comparability in the presentation and analysis of statistical data describing the economy. Federal statistical agencies use NAICS to collect or publish data by industry. It also is used widely by State agencies, trade associations, private businesses, and other organizations.

INEGI of Mexico, Statistics Canada, and the United States Office of Management and Budget (OMB), through its Economic Classification Policy Committee (ECPC), collaborated on NAICS to make the industrial statistics produced in the three countries comparable. NAICS is the first industry classification system developed in accordance with a single principle of aggregation, the principle that producing units that use similar production processes should be grouped together in the classification. NAICS also reflects in a much more explicit way the enormous changes in technology and in the growth and diversification of services that have

marked recent decades. Industry statistics presented using NAICS are also comparable with statistics compiled according to the latest revision of the United Nations' International Standard Industrial Classification (ISIC, Revision 3) for some sixty high-level groupings.

For the three countries, NAICS provides a consistent framework for the collection, tabulation, presentation, and analysis of industrial statistics used by government policy analysts, by academics and researchers, by the business community, and by the public. However, because of different national economic and institutional structures as well as limited resources and time for constructing the 1997 NAICS, the NAICS structure was not made entirely comparable at the individual industry level across all three countries at that time. The completion effort represented in this notice originally focused on the construction and wholesale trade sectors. In the 1997 NAICS these two sectors were comparable at the two-digit level for all three North American countries.

Throughout its development, NAICS has been guided by four principles:

(1) NAICS is erected on a production-oriented or supply-based conceptual framework. This means that producing units that use the same or similar production processes are grouped together in NAICS.

(2) NAICS gives special attention to developing production-oriented classifications for (a) new and emerging industries, (b) service industries in general, and (c) industries engaged in the production of advanced technologies.

(3) Time series continuity is maintained to the extent possible, given the need to reflect changes in the economy and proposals from data users. Adjustments will be required for sectors where the United States, Canada, and Mexico have incompatible industry classification definitions in order to produce a common industry system for all three North American countries.

(4) The system strives for compatibility with the two-digit level of the International Standard Industrial Classification of All Economic Activities (ISIC Rev. 3) of the United Nations.

The ECPC is committed to maintaining the principles of NAICS. For example, the proposed split in the national industry for department stores will separately identify two distinct and economically significant types of operations in the United States in accordance with principle 1. The ECPC is recommending the revisions for nonstore retailers and new Internet information businesses based on NAICS principle 2. The rapid growth of Internet companies and the lack of a structural method for identifying these emerging industries justify the additional NAICS and U.S. national detail. The current round of completion activities is limited in scope based on NAICS principle 3 regarding time series continuity. The ECPC believes that the narrow focus of the completion activities and the importance of Construction and Information to the economies of all three countries justify the resulting time series breaks. Users are encouraged to implement the most current structure of NAICS as it becomes available.

**Part II: Summary of Public Comments**

In response to the February 25, 1999, **Federal Register** notice, the ECPC received 28 comments regarding specific industries and recommended changes to the structure of NAICS 1997. Twenty-two of the comments focused on the Construction Sector, three focused on the Wholesale Trade Sector, and three were outside the scope of revision as defined by the ECPC.

Public proposals for individual industries from all three countries were considered for acceptance if the proposed industry was based on the production-oriented concept of the system. When a proposal was not accepted, it was usually because: (a) The resulting industry would have been too small in the U.S., (b) data indicated that the specialization ratio was low (the specialization ratio indicates the extent to which the establishments in a given industry concentrate on the activities that define the industry), or (c) the proposal did not meet the production-oriented criterion for forming an industry in NAICS.

The ECPC received a number of comments that suggested changes to NAICS that were not accepted. All of these suggestions were carefully considered. Some suggestions were modified at the request of the ECPC to better meet the objectives of NAICS. Other suggestions proposed products (rather than industries); these will be considered in the future development of a product system. Still other suggestions for change could not be justified on a production basis, or could not be implemented in statistical programs, for various reasons, and thus were not accepted. The ECPC is preparing individual responses to these suggestions, carefully explaining why they were not accepted.

Many of the twenty-two comments that related to the Construction sector requested changes or structures that were contradictory. For this reason alone, the ECPC was not able to implement all of the requested changes. Other comments requested detail that was not supported by specialization studies performed using 1997 Census of Construction data. A final constraint on the acceptability of proposals was the necessity for three-country comparability. A comment that was justified on a production function basis in the United States was not always supportable by either Canada or Mexico.

The proposed structure of the Construction Sector has limited three-country comparability. In most areas, the representatives of the three countries attained comparability at the five-digit level. The Specialty Trade Contractors subsector is comparable at the four-digit level. This was the result of a desire to allow U.S. agencies to develop separate residential and nonresidential data for Specialty Trade Contractors without creating special aggregations outside of the NAICS structure. Although separate residential and nonresidential specialty trade industries were not created because of production function considerations, the structure does allow for residential and nonresidential data collection by U.S. statistical agencies. The sixth digit of the structure is reserved for this purpose. This information can be derived from Census Bureau data in Economic Census years. The Bureau of Labor Statistics will provide this information in the Covered Employment and Wages Program when the NAICS 2002 changes are implemented.

A second major proposal in the Construction sector related to project delivery methods. In recent years, Federal and State procurement laws have been changed to allow design-build as an alternative to the traditional design-bid-build process for construction projects in the public arena. This project delivery method alternative to structuring the Construction sector was not accepted in the three-country negotiations for a variety of reasons. First, the design-build terminology is used differently by various practitioners. The variation in use and meaning will cause difficulties in classification and the development of homogeneous industry groupings without extremely detailed questionnaires. Such a level of detail is not practical. Next, while of growing importance in the United States and Canada, design-build is not so prominent in Mexico. Finally, a project delivery method structure would have greatly expanded the number of industries at the lowest level of the classification. The proposed structure has 31 detailed industries for the United

States. A further split by project delivery method would further expand the number of detailed industries and reduce the size of each.

The majority of the comments received that related to Wholesale Trade requested a change in the previously agreed upon scope of the sector. After extensive discussions with Canada and Mexico, the representatives decided to recommend that the basic delineation between Wholesale Trade and Retail Trade should remain unchanged. Further, the representatives agreed to undertake a complete restructuring of the distribution network industries (wholesale, retail, transportation, and warehousing) in NAICS 2007. In the interim, the United States has restructured NAICS United States 1997, Sector 42, Wholesale Trade to more closely align with the existing treatment in Canada and Mexico. For the United States, the ECPC has created three new subsectors: 423, Merchant Wholesalers, Durable Goods; 424, Merchant Wholesalers, Nondurable Goods; and 425, Wholesale Electronic Markets and Agents and Brokers. These subsectors more clearly separate types of wholesale trade businesses and will lead to more homogeneous statistical data. The merchant wholesaler subsectors are characterized by establishments that take title to goods and play the role of principal in the buying and selling of goods. The Wholesale Electronic Markets and Agents and Brokers subsector is characterized by establishments that act on behalf of sellers or facilitate wholesale transactions but do not actually take title to the goods.

Wholesale trade is rapidly changing. Many traditional wholesale trade functions are being outsourced to storage, finance, logistics, or transportation specialists. In addition to these changes, the Internet has greatly expanded markets and supplier customer bases. In order to identify these changes to the extent possible, the ECPC recommends that subsector 425, Wholesale Electronic Markets and Agents and Brokers be split into two separate industries. The first would include the wholesale trade electronic markets while the second would include agents and brokers. The electronic markets provide guidance and assistance to both buyers and sellers. They also provide a unified, one stop, purchasing environment with common requirements across a large number of suppliers. The rapid growth of the business to business (B2B) electronic markets reflects the considerable efficiencies that can be obtained through the use of advanced technology. Separate identification of this rapidly growing activity will allow a more thorough and reflective analysis of wholesale trade in relation to the overall changes in distributive trades in 2007.

In addition to working on the sectors described in the February 25, 1999, **Federal Register** notice that were explicitly targeted for completion, the rapid growth of the Internet and electronic commerce resulted in a decision by the three countries to re-evaluate the Information sector as well. Although new in 1997, the Information sector lacked finite categories related to new Internet activities such as Internet service providers, web search portals, and Internet publishing and broadcasting. The second NAICS principle specifically targets new and emerging industries. The North American partners in NAICS agreed that the importance of statistical data related to new Internet businesses outweighed the time series continuity criterion also used in NAICS development. A full description of the recommended provisional changes to the Information sector is included in Part III.

In addition to the changes listed above, the ECPC is proposing several minor changes to titles of NAICS industries that have no impact on the content of those industries. The ECPC recommends the following title changes: NAICS 32611, Unsupported Plastics Film, Sheet, and Bag Manufacturing, will be changed to Plastics Packaging Materials and Unlaminated Film and Sheet Manufacturing.

NAICS 326111, Unsupported Plastics Bag Manufacturing, will be changed to Plastics Bag Manufacturing.

NAICS 326112, Unsupported Plastics Packaging Film and Sheet Manufacturing, will be changed to Plastics Packaging Film and Sheet (including Laminated) Manufacturing.

NAICS 326113, Unsupported Plastics Film and Sheet (except Packaging) Manufacturing, will be changed to Unlaminated Plastics Film and Sheet (except Packaging) Manufacturing.

NAICS 32612, Plastics Pipe, Pipe Fitting, and Unsupported Profile Shape Manufacturing, will be changed to Plastics Pipe, Pipe Fitting, and Unlaminated Profile Shape Manufacturing.

NAICS 326121, Unsupported Plastics Profile Shape Manufacturing, will be changed to Unlaminated Plastics Profile Shape Manufacturing.

NAICS 326130, Laminated Plastics Plate, Sheet, and Shape Manufacturing, will be changed to Laminated Plastics Plate, Sheet (except Packaging), and Shape Manufacturing.

NAICS 444220, Nursery and Garden Centers, will be changed to Nursery, Garden Center, and Farm Supply Stores to describe more completely the content of the industry.

NAICS 452910, Warehouse Clubs and Superstores, will be changed to Warehouse Clubs and Supercenters. The term supercenter more adequately describes the content of the NAICS industry.

NAICS 561330, Employee Leasing Services, will be changed to Professional Employer Organizations to more closely reflect common industry terminology.

The United States is also taking this opportunity to create additional national level detail for department stores and nonstore retailers. These changes will create more meaningful, homogeneous industries for the United States. Department Stores, NAICS 45211, will be split into two new 6-digit industries: Department Stores (except Discount), NAICS 452111, and Discount Department Stores, NAICS 452112.

Electronic Shopping and Mail-Order Houses, NAICS 45411, will be split into three new 6-digit industries: Electronic Shopping, NAICS 454111; Electronic Auctions, NAICS 454112; and Mail-Order Houses, NAICS 454113. The proposed changes for electronic shopping acknowledge the rapid growth of these activities in the United States. The proposed industry for Electronic Shopping includes separate establishments engaged in primarily providing electronic shopping services. The structure and codes for these new industries are detailed in Part IV of this notice.

**Time Series Continuity**

The standard approach to preserving time series continuity after classification revisions is to create linkages where the series break. This is accomplished by producing the data series using both the old and new classifications for a given period of transition. With the dual classifications of data, analysts can assess the full impact of the revision. Data producers then may measure the reallocation of the data at aggregate industry levels and develop a concordance between the old and new series for that given point in time. The concordance creates a crosswalk between the old and new classification systems. Statistical agencies in the U.S. are planning links between the 1997 NAICS and 2002 NAICS (with U.S. national detail).

**ECPC Recommendations for the Hierarchical Structure, Industries, and Coding System for the 2002 NAICS Revisions**

Parts III and IV below present the ECPC's final recommendations for how United States statistical agencies would revise the affected sectors and industries in the 2002 NAICS classification system for the United States. The tables show the proposed 2002 hierarchy, including NAICS and U.S. national detail industries, and the proposed coding system in 2002 NAICS sequence, for the affected sectors and industries. Parts III and IV include all ECPC recommended changes to the structure based on public comment and discussions with INEGI and Statistics Canada.

**John T. Spotila,**

*Administrator, Office of Information and Regulatory Affairs.*

**Part III—Proposed Revisions to the NAICS Structure**

*Section A—NAICS Structure—Construction*

North American Industry Classification System (NAICS 2002) Agreement Number 32

This document represents the proposed agreement on the structure of the North American Industry Classification System (NAICS) for the construction sector. The detailed NAICS structure along with a brief description of the structure is attached (Attachments 1 and 2). Each country agrees to release a copy of the proposed NAICS structure to interested data users. Comments received will be shared among the countries and additional discussions will be held before a final decision on the structure is made. Each country may add additional detailed industries below the internationally agreed upon level of NAICS, as necessary to meet national needs, so long as this additional detail aggregates to an internationally agreed upon level in order to ensure full comparability among the three countries. This NAICS structure was presented and accepted at the NAICS Committee meeting held on November 30 through December 2, 1999, in Ottawa, Canada.

| Accepted | Signature | Date |
|---|---|---|
| Canada | _____Richard Barnabe_____ | 12/2/1999 |
| Mexico | _____Enrique Ordaz_____ | 12/2/1999 |
| United States | _____Carole Ambler_____ | 12/2/1999 |

ATTACHMENT 1—NAICS STRUCTURE

| | |
|---|---|
| 23 | Construction |
| 236 | Construction of Buildings |
| 2361 | Residential Building Construction |
| 23611 | Residential Building Construction |
| 2362 | Nonresidential Building Construction |
| 23621 | Industrial Building Construction |
| 23622 | Commercial and Institutional Building Construction |
| 237 | Heavy and Civil Engineering Construction |
| 2371 | Utility System Construction |
| 23711 | Water and Sewer Line and Related Structures Construction |
| 23712 | Oil and Gas Pipeline and Related Structures Construction |
| 23713 | Power and Communication Line and Related Structures Construction |
| 2372 | Land Subdivision |
| 23721 | Land Subdivision |
| 2373 | Highway, Street, and Bridge Construction |
| 23731 | Highway, Street, and Bridge Construction |
| 2379 | Other Heavy and Civil Engineering Construction |
| 23799 | Other Heavy and Civil Engineering Construction |
| 238 | Specialty Trade Contractors |
| 2381 | Foundation, Structure, and Building Exterior Contractors |
| 2382 | Building Equipment Contractors |
| 23821 | Electrical Contractors |
| 23822 | Plumbing, Heating, and Air-Conditioning Contractors |
| 23829 | Other Building Equipment Contractors |
| 2383 | Building Finishing Contractors |
| 2389 | Other Specialty Trade Contractors |

**Attachment 2—Description of Construction Sector**

*Draft Classification for Construction*

Representatives of the statistical agencies of Canada, Mexico, and the United States agree to a draft industrial classification for the Construction sector. The draft classification of the construction sector is divided into subsectors covering Construction of Buildings, Heavy and Civil Engineering Construction, and Specialty Trade Contractors. These subsectors are further subdivided into 10 four-digit industry groups and 12 five-digit industries.

*A General Outline*

Establishments in the Construction Sector erect buildings, perform heavy and civil engineering construction, and perform specialized construction trade activities. The classification distinguishes between establishments that are responsible for an entire building or building renovation project and those that perform specific functions during the erection of a building or building renovation project. A subsector is provided for each group. The classification further distinguishes all establishments performing civil engineering and heavy construction activities, whether the complete project or a portion of the project, in a third subsector.

In Construction of Buildings, the classification distinguishes between the

erection of residential buildings and the erection of nonresidential buildings. Each of these industry groups includes establishments that are responsible for an entire building or building renovation project. These industry groups include general contractors and design-builders working for owners and operative builders who undertake the entire project on a speculative basis. Establishments in the Construction of Buildings subsector may perform specific construction activities or subcontract for specific tasks. Additionally, each industry group includes establishments that are hired to manage the project, including oversight of the design, financing, bidding, and review processes, and/or act as a liaison between the owner and a general contractor, designer, architect, or engineer.

The classification makes no distinctions in the residential buildings industry group because of differences in the organization of construction establishments among the three countries. National level detail will provide specific information based on the type of structure (single family or multi-family), type of project (new structures or alterations and renovations of existing structures), or type of establishment (general contractor or operative builder) as appropriate in each country. Consideration was given to each of these breakouts but national differences in the operating characteristics of establishments prevented three-country level comparability. Establishments erecting nonresidential buildings are segregated into establishments erecting commercial and institutional buildings and establishments erecting industrial buildings and manufacturing plants. This NAICS industry level distinction recognizes the differences inherent in erecting the various types of buildings.

Establishments performing heavy construction are separated into four industry groups: Utility System Construction; Land Subdivision; Highway, Street, and Bridge Construction; and Other Heavy and Civil Engineering Construction. Industries in these groups are engaged in large-scale projects and have related production characteristics. Heavy and Civil Engineering Construction establishments can perform the work or subcontract the work to specialized establishments.

Establishments in the Utility System Construction industry group construct lines and related structures for utility systems. For example, Water and Sewer Line and Related Structures Construction establishments that construct pipelines, distribution lines, irrigation systems, water treatment plants, sewage treatment plants, and pumping stations are grouped together. This recognizes the fact that these buildings and structures are inter-related in a network environment and are not meaningfully separated based on the particular type of structure.

Land Subdivision is included in Heavy and Civil Engineering Construction because of the similarity of activities involved with land subdivision and the other industry groups. For example, improved subdivisions often require installation of basic utilities, roads, and similar improvements that are also included elsewhere in the Heavy and Civil Engineering Construction subsector. The production similarities for construction of highways, streets, and bridges justified the third industry group.

The fourth, residual, industry group includes other heavy and civil engineering construction. Examples include marine construction, such as the building of ports and harbors, and construction of dams for retaining water, flood control, or hydroelectric power generation purposes. Heavy and Civil Engineering Construction includes general contractors, design-builders, operative builders, and those specialty trade contractors whose activities generally only apply to the Heavy and Civil Engineering Construction subsector. The activities performed by the specialty trade contractors in this subsector are rarely performed elsewhere.

In Specialty Trade Contractors, NAICS recognizes the highly specialized nature of a large number of small construction establishments. These establishments concentrate on a particular construction activity or group of activities rather than accepting responsibility and risk for an entire project. This difference separates these establishments from the first two subsectors. Establishments in the Specialty Trade Contractors subsector usually act as subcontractors for the general contractors, operative builders, design-builders, and other establishments that assume the risk for an entire construction project that takes place in the Construction of Buildings subsector. In this capacity, they can perform work as subcontractors or work directly for owners. Specialty Trade Contractors also perform repair, renovation, and maintenance on various systems that fall within their specialty. The skills and equipment used by specialty trade contractors in this subsector have more general application than skills and equipment used by the specialty trade contractors included in Heavy and Civil Engineering Construction.

*Limitations and Constraints of the Classification*

Climatic and geological differences within and among the three countries lead to different construction techniques and practices for various types of structures. While wood is a significant input for residential housing in the Northern United States and Canada, concrete and stone are more common in the Southwest United States and in Mexico. Concrete and stone do not require siding and various other protections that are required with wood sheathing. Geological instability results in different structural and foundation requirements. Climate conditions dictate more insulation in northern areas while less insulation is appropriate in drier and warmer climates. These conditions lead to differing size and importance of various industries throughout North America. Each subsector varies across geographic lines based on the availability of raw materials and the environmental conditions that dictate construction practices.

*Relationship to ISIC*

Most of the industries in the NAICS Construction Sector are contained in Division 45, Construction, of the International Standard Industrial Classification of All Economic Activities (ISIC, Revision 3) of the United Nations. There are, however, some differences between the two systems. Both NAICS and ISIC exclude preparation of oil and gas fields from Construction. NAICS includes construction management activities within each of the industries in the Construction Sector while ISIC classifies construction management activities in Division 74, Other Business Activities. NAICS includes land subdivision in Construction, while ISIC classifies land subdivision in Division 70, Real Estate Activities.

*Some Changes to the National Industries*

During the initial NAICS development effort, the three countries agreed to the boundary and scope of the Construction sector at the two-digit level. Each of the countries developed its own national structure at the three-, four-, five-, and six-digit levels. The changes discussed are identified as NAICS with a prefix of C for Canada, U for the United States, and M for Mexico for previous national detail and NAICS02 for the draft classification.

For Canada, CNAICS 23 was broken into two subsectors: CNAICS 231, Prime Contracting; and CNAICS 232, Trade Contracting. NAICS02 comprises three subsectors: 236, Construction of Buildings: 237, Heavy and Civil Engineering Construction; and 238, Specialty Trade Contractors.

CNAICS 23141, Construction Management, will be distributed throughout all of the new NAICS02 Construction industries.

Land Subdivision and Development, CNAICS 23111 will be moved from the subsector for Building Construction to NAICS02 23721 within the Heavy and Civil Engineering Construction subsector. This move reflects the similarity of the activities performed in the land subdivision industry and other industries in the Heavy and Civil Engineering Construction subsector.

The construction of structures, such as sewage treatment plants and water treatment plants will be moved from CNAICS 23139, Other Engineering Construction, to NAICS02 2371, Utility System Construction, and distributed to the proper industries within the industry group.

For Mexico, the NAICS02 structure is very similar to the MNAICS structure developed in 1997. While there were various minor reaggregations below the industry group level, the subsector levels remained largely unchanged.

MNAICS 236 contained one industry group, 2361 Buildings. NAICS02 now contains two industry groups: 2361, Residential Buildings; and 2632, Nonresidential Buildings.

MNAICS 237 was made up of two industry groups: 2371 Construction of Structures for Water, Electricity, Telecommunications, Petroleum, and Gas; and 2372, Construction of Urban Infrastructure and Transportation Systems. NAICS02 is divided into four industry groups: 2371, Utility Systems Construction; 2372, Land Subdivision; 2373, Highway, Street, and Bridge Construction; and 2379, Other Heavy and Civil Engineering Construction.

As is the case for Canada, MNAICS 23822, Supervision and Management of Construction projects will be distributed throughout the construction industries in NAICS02.

For the United States, the subsector structures for UNAICS and NAICS02 are very similar. Most changes occurred below the subsector level. Of particular note, UNAICS 23311, Land Subdivision and Land Development moved from the subsector for construction of buildings to NAICS02 237, Heavy and Civil Engineering Construction.

UNAICS 23499, All Other Heavy Construction, included water treatment plants, sewage treatment plants and similar buildings that are now included in NAICS02 2371, Utility System Construction.

At the national level, the United States has reinstituted an industry for operative residential builders that were not separately identified in UNAICS. This industry had existed in the US SIC. The United States also created a new national industry for residential remodeling establishments. In previous classifications, residential remodelers were classified together with new residential construction.

*Achievement of Objectives*

The classification meets the objectives for the North American Industry Classification System (NAICS). It includes industries that group establishments with similar production processes, that is, it applies the production-oriented economic concept. In the main, the hierarchical structure of the classification also follows the production concept.

The industries are highly specialized, and they are economically significant. Disruptions to time series are minimal. The classification achieves comparability at most five-digit levels for the three participating countries. All three countries agree on the detailed definitions of the industries.

Other objectives of the NAICS project are not as relevant in this area of the classification as in others. These objectives are the delineation of new and emerging industries, service industries, and industries engaged in the production of new technologies.

*Section B—NAICS Structure—Information*

PROVISIONAL STRUCTURE PROPOSED FOR SECTOR 51, INFORMATION

| | |
|---|---|
| 51 | Information |
| 511 | Publishing Industries (except Internet) |
| 5111 | Newspaper, Periodical, Book, and Directory Publishers |
| 51111 | Newspaper Publishers |
| 51112 | Periodical Publishers |
| 51113 | Book Publishers |
| 51114 | Directory and Mailing List Publishers |
| 51119 | Other Publishers |
| 5112 | Software Publishers |
| 51121 | Software Publishers |
| 512 | Motion Picture and Sound Recording Industries |
| 5121 | Motion Picture and Video Industries |
| 51211 | Motion Picture and Video Production |
| 51212 | Motion Picture and Video Distribution |
| 51213 | Motion Picture and Video Exhibition |
| 51219 | Postproduction Services and Other Motion Picture and Video Industries |
| 5122 | Sound Recording Industries |
| 51221 | Record Production |
| 51222 | Integrated Record Production/Distribution |
| 51223 | Music Publishers |
| 51224 | Sound Recording Studios |
| 51229 | Other Sound Recording Industries |
| 515 | Broadcasting (except Internet) |
| 5151 | Radio and Television Broadcasting |
| 51511 | Radio Broadcasting |
| 51512 | Television Broadcasting |
| 5152 | Cable and Other Subscription Programming |
| 51521 | Cable and Other Subscription Programming |
| 516 | Internet Publishing and Broadcasting |
| 5161 | Internet Publishing and Broadcasting |
| 51611 | Internet Publishing and Broadcasting |

PROVISIONAL STRUCTURE PROPOSED FOR SECTOR 51, INFORMATION—Continued

| | |
|---|---|
| 517 | Telecommunications |
| 5171 | Wired Telecommunications Carriers |
| 51711 | Wired Telecommunications Carriers |
| 5172 | Wireless Telecommunications Carriers (except Satellite) |
| 51721 | Wireless Telecommunications Carriers (except Satellite) |
| 5173 | Telecommunications Resellers |
| 51731 | Telecommunications Resellers |
| 5174 | Satellite Telecommunications |
| 51741 | Satellite Telecommunications |
| 5175 | Cable and Other Program Distribution |
| 51751 | Cable and Other Program Distribution |
| 5179 | Other Telecommunications |
| 51791 | Other Telecommunications |
| 518 | Internet Service Providers, Web Search Portals, and Data Processing Services |
| 5181 | Internet Service Providers and Web Search Portals |
| 51811 | Internet Service Providers and Web Search Portals |
| 5182 | Data Processing, Hosting, and Related Services |
| 51821 | Data Processing, Hosting, and Related Services |
| 519 | Other Information Services |
| 5191 | Other Information Services |
| 51911 | News Syndicates |
| 51912 | Libraries and Archives |
| 51919 | All Other Information Services |

**Draft Classification for Information**

Representatives of the statistical agencies of Canada, Mexico, and the United States provisionally agree to a draft industrial classification for the Information sector. The draft classification of the Information sector is divided into subsectors covering Publishing Industries (except Internet); Motion Picture and Sound Recording Industries; Broadcasting (except Internet); Internet Publishing and Broadcasting; Telecommunications; Internet Service Providers, Web Search Portals and Data Processing; and Other Information Services. These subsectors are further subdivided into 16 four-digit industry groups and 30 five-digit industries.

The Information sector comprises establishments primarily engaged in (a) producing and distributing cultural information, (b) providing the means to transmit or distribute these products as well as data or communications, and (c) processing data.

Many of the industries in the NAICS Information sector are engaged in either producing and manipulating products protected by copyright law, or in distributing them (other than distribution by traditional wholesale and retail methods). Examples are traditional publishing industries, software publishing industries, and film and sound industries. Also included are broadcasting industries, telecommunication industries, and information access providers and processors that process and distribute information and provide access to facilities for transmission of information. Although many new industries have been created for this sector, most of the activities it contains have existed for some time. A new feature of the revised Information Sector is the inclusion of new industries for activities that have recently appeared in the economy due to the rapid expansion of the Internet. When NAICS was initially conceived, Internet service providers, web search portals, and other forms of Internet distribution of content were in their infancy. These activities are now separately identified in the classification.

The following paragraphs provide a brief description of the individual components of this sector.

The Publishing Industries (except Internet) subsector groups establishments engaged in the publishing of newspapers, periodicals, and books, as well as directory, mailing list, and software publishing. In general, publishers issue copies of works for which they possess copyright for sale to the general public, in one or more formats including traditional print form or in electronic copy such as diskette or CD–ROM. Publishers may publish works originally created by others for which they have obtained the rights, and/or works that they have created in-house.

In NAICS, publishing—the reporting, writing, editing, and other processes that are required to create an edition of a newspaper, for example—is treated as a major economic activity in its own right, and classified in the Information sector, whereas printing remains in the NAICS Manufacturing sector. In part, the NAICS classification reflects the fact that publishing increasingly takes place in establishments that are physically separate from the associated printing establishments. More crucially, the NAICS classification of book and newspaper publishing is intended to portray their roles in a modern economy, where they do not resemble manufacturing activities.

Software publishing is included here because the activity—creation of a copyrighted product and bringing it to market—is equivalent to the creation process for other types of intellectual products. Reproduction of pre-packaged software is treated in NAICS as a manufacturing activity and custom design of software to client specifications remains in Professional, Scientific, and Technical Services. These distinctions arise because of the different ways that software is created, reproduced, and distributed. The only change to this subsector for 2002 is the new title for Industry 51114 that has been renamed from Database and Directory Publishers to Directory and Mailing List Publishers. This new title and an updated definition better describe the activities included in this industry.

The Motion Picture and Sound Recording Industries subsector groups establishments involved in producing and distributing motion pictures and sound recordings (those involved exclusively in the wholesaling of sound recordings are classified in Wholesale Trade). While motion picture and sound recordings are also ''published,'' the processes involved are sufficiently different from those traditional publishing industries to warrant placing them in the Motion Picture and Sound Recording Industries subsector.

The production and distribution of these products involves a complex process and several distinct industries. The Motion Picture and Video Industries industry group includes separate industries for Motion Picture and Video Production, Motion Picture and Video Distribution, Motion Picture and Video Exhibition, Postproduction Services, and Other Motion Picture and Video Industries. The distribution industry includes establishments primarily engaged in acquiring the distribution rights (major input) for films and programs, and charging such clients as movie theaters and broadcasters to show them; those engaged in wholesaling videos to retail stores and rental outlets are classified in Wholesale Trade. The Sound Recording Industries industry group contains classes for Record Production Companies, Integrated Record Production/Distribution, Music Publishers, Sound Recording Studios, and Other Sound Recording Industries.

Record production companies are primarily engaged in searching out, identifying and contracting artists for whom they arrange and finance the production of master tapes for which they hold the reproduction rights. Establishments in this industry do not own duplication facilities or have distribution capabilities, so they commercialize these rights through leasing/licensing agreements with third parties. Integrated record production companies (major record labels) integrate the production, manufacturing and/or distribution functions, commercializing reproduction rights through these vertically integrated operations. While establishments engaged in record production derive most of their revenues from leasing/licensing the reproduction rights of master recordings and from mechanical royalties, integrated record companies derive most of their revenues from the exploitation of their rights to distribute duplicate sound recordings. No changes were made to this subsector for 2002.

In NAICS 2002, Telecommunications and Broadcasting are split into separate subsectors. This structural change acknowledges that the production and distribution of information or cultural content is significantly different from the creation of the infrastructure used in distribution.

The new Broadcasting (except Internet) subsector, NAICS 515, distinguishes between radio broadcasting, television broadcasting, and cable and other subscription programming. These industry groups are based on differences in the methods of communication and in the nature of services provided. Broadcasting (except Internet) includes establishments that operate broadcasting studios and facilities for over the air, cable, or satellite delivery of audio and video programming such as music, entertainment, news, talk, and the like. These establishments are often engaged in producing and purchasing programs and generating revenues from the sale of time to advertisers, and from donations, subsidies, and/or the sale of programs. Cable and Other Subscription Programming establishments operate studios and facilities for the broadcasting of programs that are typically narrow cast in nature (limited format such as news, sports, education, and youth-oriented programming). The services of these establishments are typically sold on a subscription or fee basis.

NAICS 2002 recognizes for the first time the significant differences between traditional publishing and broadcasting and similar activities using the Internet in a new subsector for Internet Publishing and Broadcasting, NAICS 516. The unique combination of text, audio, video, and interactive features present in informational or cultural products on the Internet justifies the creation of the new subsector. NAICS separates Internet Publishing and Broadcasting in order to identify and statistically characterize this area of rapid growth in the economies of the three North American partners in NAICS.

The new Telecommunications subsector, NAICS 517, is primarily engaged in operating, maintaining, and/or providing access to facilities for transmitting voice, data, text, sound, and full motion picture video between network termination points. In contrast to the Broadcasting subsector, the Telecommunications subsector generally does not produce information or cultural content. Telecommunications includes groupings and industries based on the technologies used. As such, there are separate industry groups for Wired Telecommunications Carriers, Wireless Telecommunications Carriers (except Satellite), Telecommunications Resellers, Satellite Telecommunications, Cable and Other Program Distribution, and Other Telecommunications. All of these industry groups, except Telecommunications Resellers, operate transmission facilities that may be based on a single technology or a combination of technologies. The Cable and Other Program Distribution industry group includes establishments that operate cable systems, direct-to-home satellite systems, or other similar systems.

Another new subsector in NAICS groups establishments that provide Internet access; Internet search services; and data processing, hosting, and related services. The Internet Service Providers, Web Search Portals, and Data Processing Services subsector, NAICS 518, is subdivided into two industry groups. The Internet Service Providers and Web Search Portals industry group includes establishments that provide access to the Internet or provide the means to search for information on the Internet. The Data Processing, Hosting, and Related Services industry group includes establishments that process data for others. Mainframe computer time-share facilities and web hosting establishments are included with Data Processing, Hosting, and Related Services.

The final subsector, Other Information Services, NAICS 519, provides a classification for other information providers, such as news syndicates, as well as repositories of information products in the form of libraries and archives. Libraries and archives provide access to information products stored in their physical facilities. Museums, however, are classified in sector 71, Arts, Entertainment, and Recreation.

*Section C—NAICS United States—Wholesale Trade*

Representatives of the statistical agencies of Canada, Mexico, and the United States conducted extensive discussions on the content and conceptual structuring of industries for wholesale trade of goods. Due to the complexity of this dynamic sector and structural differences among the three countries, no additional three-country comparability was obtained for wholesale trade. Canada, Mexico, and the United States agree on the overall content of Wholesale Trade but will retain unique national industry detail within the sector. However, the United States has taken the insights gained from these discussions and incorporated them into a new national structure for Wholesale Trade.

As in the 1997 NAICS United States there are two main types of wholesalers included in Wholesale Trade for the 2002 NAICS United States: those that sell goods on their own account and those that arrange sales and purchases for others for a commission or fee.

(1) Establishments that sell goods on their own account are known as wholesale merchants, distributors, jobbers, drop shippers, import/export merchants, and sales branches. These establishments typically take title to the goods being sold and maintain their own warehouse, where they receive and

handle goods for their customers. Goods are generally sold without transformation, but may include integral functions, such as sorting, packaging, labeling, and other marketing services. Throughout this notice, these establishments are referred to as merchant wholesalers.

(2) Establishments arranging for the purchase or sale of goods owned by others or the purchase of goods on a commission basis are known as agents and brokers, commission merchants, import/export agents and brokers, auction companies, and manufacturer's representatives. These establishments do not take title to the goods being sold. Throughout this notice, these establishments are referred to as business to business electronic markets and agents and brokers.

Sector 42, Wholesale Trade, would be divided into three subsectors in the United States: subsector 423, Merchant Wholesalers, Durable Goods; subsector 424, Merchant Wholesalers, Nondurable Goods; and subsector 425, Wholesale Electronic Markets and Agents and Brokers. Each of these subsectors is further divided into industry groups and industries to meet the detailed needs of the U.S. statistical community.

Subsector 423, Merchant Wholesalers, Durable Goods, is split into nine industry groups that follow the structure of NAICS 1997. These industry groups are further divided into thirty-seven national level industries. The key difference between the content of subsector 421, Wholesale Trade, Durable Goods in 1997 and subsector 423, Merchant Wholesalers, Durable Goods, is the exclusion of electronic markets, and agents, brokers, and other intermediaries that do not take title to the goods being sold in subsector 423. Merchant wholesalers in NAICS 2002 are defined to include those establishments that buy or sell goods on their own account. Included are wholesale merchants, distributors, jobbers, drop shippers, import/export merchants, and manufacturer's sales branches. The key characteristic of wholesale establishments included in subsector 423 is ownership of the goods that are being sold.

Subsector 424, Merchant Wholesalers, Nondurable Goods, mirrors the structure of NAICS 1997 subsector 422, Wholesale Trade, Nondurable Goods. Again, the significant difference is the exclusion of electronic markets, and agents and brokers and other intermediaries that do not take title to the goods being sold. Subsector 424 is split into nine industry groups that are further divided into thirty-two national level industries classifying merchant wholesalers of nondurable goods.

Subsector 425, Wholesale Electronic Markets and Agents and Brokers is a new subsector for NAICS United States 2002. Establishments in the Wholesale Electronic Markets and Agents and Brokers subsector arrange for the sale of goods owned by others on a fee or commission basis. These establishments, unlike those in subsectors 423, do not take title to the goods being sold. They are acting on behalf of the buyers and sellers of goods.

This subsector is being created to classify agents and brokers as well as electronic markets that facilitate wholesale trade. Over the past two years, the explosive growth of wholesale trade on the Internet has radically changed the role of agents and brokers and greatly expanded potential markets for suppliers. While a wholesale trade business was previously constrained by geography and the cost of initiating contact with potential customers, the Internet has created inexpensive, efficient national markets for suppliers. The United States proposal for subsector 425, therefore, creates a new national industry for these electronic markets in wholesale trade, separate from the more traditional agents and brokers. The outsourcing of storage, transportation, finance, and other traditional wholesale trade functions is immensely eased with the advent of these new national electronic wholesale markets. In order to gather data to better understand these changes in the context of all distributive trade industries, they will be separately identified and categorized in NAICS United States 2002.

NAICS United States 1997 included 69 separate national industries in Wholesale Trade. NAICS United States 2002, includes 71 national industries in Wholesale Trade. With the addition of only two national industries, the restructuring of Wholesale Trade creates more homogeneous statistical data for users, eases the burden of code assignment for sales representatives and wholesale trade brokers, and separately identifies emerging trends for study and analysis. Although additional international comparability was not obtained, the changes to Sector 42, Wholesale Trade, in the United States represent a major improvement in the statistics generated for wholesale trade using NAICS. These changes also position the United States to measure and analyze more completely all distributive trade industries during future NAICS revisions.

The entire proposed structure for Wholesale Trade is detailed in Part IV of this notice.

BILLING CODE 3110–01–P

# Part IV. 2002 NAICS United States Structure, Including Relationships to 1997 NAICS United States and 1987 Standard Industrial Classification

Table 1 - 2002 NAICS United States Matched to 1997 NAICS United States

The definition of status codes are as follows: E-existing industry, N-new industry; R-revised industry; *-part of a 1997 NAICS industry

| 2002 NAICS Code | 2002 NAICS and U.S. Description | Status Code | 1997 NAICS Code | 1997 NAICS Description |
|---|---|---|---|---|
| 236 | Construction of Buildings | | | |
| 2361 | Residential Building Construction | | | |
| 23611 | Residential Building Construction | | | |
| 236115 | New Single-Family Housing Construction (except Operative Builders) | R | *233210 | Single Family Housing Construction (except operative builders and remodeling contractors) |
| 236116 | New Multifamily Housing Construction (except Operative Builders) | R | *233220 | Multifamily Housing Construction (except barrack and dormitory construction, operative builders, and remodeling contractors) |
| 236117 | New Housing Operative Builders | N | *233210 | Single Family Housing Construction (operative builders) |
| | | | *233220 | Multifamily Housing Construction (operative builders) |
| 236118 | Residential Remodelers | N | *233210 | Single Family Housing Construction (remodeling contractors) |
| | | | *233220 | Multifamily Housing Construction (remodeling contractors) |
| 2362 | Nonresidential Building Construction | | | |
| 23621 | Industrial Building Construction | R | *233310 | Manufacturing and Industrial Building Construction (except grain elevators, dry cleaning plants, and manufacturing and industrial warehouses) |
| | | | *234930 | Industrial Nonbuilding Structure Construction (process batch plants, incinerators, industrial furnaces and kilns, mining appurtenance, and construction management of these projects) |
| | | | *234990 | All Other Heavy Construction (waste disposal plant construction) |
| 23622 | Commercial and Institutional Building Construction | R | *233220 | Multifamily Housing Construction (barrack and dormitory construction) |
| | | | *233310 | Manufacturing and Industrial Building Construction (grain elevators, dry cleaning plants, and manufacturing and industrial warehouses) |
| | | | 233320 | Commercial and Institutional Building Construction |
| | | | *235990 | All Other Special Trade Contractors (indoor swimming pools) |
| 237 | Heavy and Civil Engineering Construction | | | |
| 2371 | Utility System Construction | | | |
| 23711 | Water and Sewer Line and Related Structures Construction | R | *234910 | Water, Sewer, and Pipeline Construction (water/sewer pumping stations, sewage collection and disposal lines, storm sewers, sewer/water mains and lines, water storage tanks and towers, and construction management of these projects) |
| | | | *234990 | All Other Heavy Construction (irrigation systems, sewage treatment and water treatment plants, construction management of these projects) |
| | | | 235810 | Water Well Drilling Contractors |
| 23712 | Oil and Gas Pipeline and Related Structures Construction | N | *213112 | Support Activities for Oil and Gas Operations (construction of field gathering lines on a contract basis) |
| | | | *234910 | Water, Sewer, and Pipeline Construction (gas and oil pumping stations, gas and oil pipeline construction, gas mains, gas and oil storage tank construction, and construction management of these projects) |
| | | | *234930 | Industrial Nonbuilding Structure Construction (petrochemical plants, refineries, and construction management of these projects) |
| 23713 | Power and Communication Line and Related Structures Construction | R | 234920 | Power and Communication Transmission Line Construction |
| | | | *234930 | Industrial Nonbuilding Structure Construction (power generation plants (excluding hydroelectric dams), transmission and distribution transformer stations, and construction management of these projects) |

| | | | | |
|---|---|---|---|---|
| 2372 | Land Subdivision | | | |
| 23721 | Land Subdivision | E | 233110 | Land Subdivision and Land Development |
| 2373 | Highway, Street, and Bridge Construction | | | |
| 23731 | Highway, Street, and Bridge Construction | R | 234110 | Highway and Street Construction |
| | | | *234120 | Bridge and Tunnel Construction (bridge construction) |
| | | | *235210 | Painting and Wall Covering Contractors (highway and traffic line painting) |
| 2379 | Other Heavy and Civil Engineering Construction | | | |
| 23799 | Other Heavy and Civil Engineering Construction | R | *234120 | Bridge and Tunnel Construction (tunnel construction) |
| | | | *234990 | All Other Heavy Construction (except waste disposal plant construction, irrigation systems, sewage treatment and water treatment plants, right-of-way clearing and line slashing, blasting, trenching, and equipment rental with operator) |
| | | | *235990 | All Other Special Trade Contractors (anchored earth retention contractors) |
| 238 | Specialty Trade Contractors | | | |
| 2381 | Foundation, Structure, and Building Exterior Contractors | | | |
| 23811 | Poured Concrete Foundation and Structure Contractors | R | *235710 | Concrete Contractors (except residential and commercial asphalt, brick, and concrete paving) |
| 23812 | Structural Steel and Precast Concrete Contractors | R | *235910 | Structural Steel Erection Contractors (except curtain walls, metal furring installation, and cooling tower installation) |
| 23813 | Framing Contractors | R | *235510 | Carpentry Contractors (framing carpentry) |
| 23814 | Masonry Contractors | R | 235410 | Masonry and Stone Contractors |
| | | | *235420 | Drywall, Plastering, Acoustical, and Insulation Contractors (stucco contractors) |
| 23815 | Glass and Glazing Contractors | E | 235920 | Glass and Glazing Contractors |
| 23816 | Roofing Contractors | R | *235610 | Roofing, Siding, and Sheet Metal Contractors (roofing contractors) |
| 23817 | Siding Contractors | R | *235610 | Roofing, Siding, and Sheet Metal Contractors (siding contractors) |
| 23819 | Other Foundation, Structure, and Building Exterior Contractors | R | *235910 | Structural Steel Erection Contractors (curtain walls and metal furring installation) |
| | | | *235990 | All Other Special Trade Contractors (forming contractors, ornamental metal work installation) |
| 2382 | Building Equipment Contractors | | | |
| 23821 | Electrical Contractors | R | *235110 | Plumbing, Heating, and Air-Conditioning Contractors (environmental controls installation contractors) |
| | | | 235310 | Electrical Contractors |
| 23822 | Plumbing, Heating, and Air-Conditioning Contractors | R | *235110 | Plumbing, Heating, and Air-Conditioning Contractors (except environmental controls installation contractors and septic tank, cesspool, and dry well construction) |
| | | | *235910 | Structural Steel Erection Contractors (cooling tower installation) |
| | | | *235950 | Building Equipment and Other Machinery Installation Contractors (scrubber, dust collection, and other industrial ventilation installation) |
| 23829 | Other Building Equipment Contractors | R | *235950 | Building Equipment and Other Machinery Installation Contractors (except scrubber, dust collection, and other industrial ventilation installation) |
| | | | *235990 | All Other Special Trade Contractors (service station equipment installation; boiler, duct, and pipe insulation; lightning rod installation; bowling alley installation; household-type antenna installation; church bell installation; and tower clock installation) |
| 2383 | Building Finishing Contractors | | | |
| 23831 | Drywall and Insulation Contractors | R | *235420 | Drywall, Plastering, Acoustical, and Insulation Contractors (except stucco contractors) |
| 23832 | Painting and Wall Covering Contractors | R | *235210 | Painting and Wall Covering Contractors (except highway and traffic line painting) |

| | | | | |
|---|---|---|---|---|
| 23833 | Flooring Contractors | E | 235520 | Floor Laying and Other Floor Contractors |
| 23834 | Tile and Terrazzo Contractors | E | 235430 | Tile, Marble, Terrazzo, and Mosaic Contractors |
| 23835 | Finish Carpentry Contractors | R | *235510 | Carpentry Contractors (finish carpentry) |
| 23839 | Other Building Finishing Contractors | R | *235610 | Roofing, Siding, and Sheet Metal Contractors (metal ceiling, panel, and shelving installation) |
| | | | *235990 | All Other Special Trade Contractors (weather stripping and damp-proofing, modular furniture installation, bathtub refinishing, window covering fixture installation, trade show exhibit installation and dismantling, and spectator seating installation) |
| 2389 | Other Specialty Trade Contractors | | | |
| 23891 | Site Preparation Contractors | R | *213112 | Support Activities for Oil and Gas Operations (site preparation and related construction activities on a contract basis) |
| | | | *213113 | Support Activities for Coal Mining (site preparation and related construction activities on a contract basis) |
| | | | *213114 | Support Activities for Metal Mining (site preparation and related construction activities on a contract basis) |
| | | | *213115 | Support Activities for Nonmetallic Minerals (except Fuels) (site preparation and related construction activities on a contract basis) |
| | | | *234990 | All Other Heavy Construction (right-of-way clearing and line slashing, blasting, trenching, and equipment rental (except cranes) with operator) |
| | | | *235110 | Plumbing, Heating, and Air-Conditioning Contractors (septic tank, cesspool, and dry well construction contractors) |
| | | | 235930 | Excavation Contractors |
| | | | 235940 | Wrecking and Demolition Contractors |
| | | | *235990 | All Other Special Trade Contractors (dewatering contractors, core drilling for construction, and test drilling for construction) |
| 23899 | All Other Specialty Trade Contractors | R | *234990 | All Other Heavy Construction (rental of cranes with operator) |
| | | | *235710 | Concrete Contractors (residential and commercial asphalt, brick, and concrete paving) |
| | | | *235990 | All Other Special Trade Contractors (except indoor swimming pools, earth retention contractors, forming contractors, ornamental metal work, building equipment contractors, building finishing contractors, dewatering contractors, core drilling for construction, and test boring for construction) |
| | | | *561720 | Janitorial Services (cleaning buildings during and immediately after construction) |
| 42 | Wholesale Trade | | | |
| 423 | Merchant Wholesalers, Durable Goods | | | |
| 4231 | Motor Vehicle and Motor Vehicle Parts and Supplies Merchant Wholesalers | | | |
| 42311 | Automobile and Other Motor Vehicle Merchant Wholesalers | R | *421110 | Automobile and Other Motor Vehicle Wholesalers (merchant wholesalers) |
| 42312 | Motor Vehicle Supplies and New Parts Merchant Wholesalers | R | *421120 | Motor Vehicle Supplies and New Parts Wholesalers (merchant wholesalers) |
| 42313 | Tire and Tube Merchant Wholesalers | R | *421130 | Tire and Tube Wholesalers (merchant wholesalers) |
| 42314 | Motor Vehicle Parts (Used) Merchant Wholesalers | R | *421140 | Motor Vehicle Parts (Used) Wholesalers (merchant wholesalers) |
| 4232 | Furniture and Home Furnishing Merchant Wholesalers | | | |
| 42321 | Furniture Merchant Wholesalers | R | *421210 | Furniture Wholesalers (merchant wholesalers) |
| 42322 | Home Furnishing Merchant Wholesalers | R | *421220 | Home Furnishing Wholesalers (merchant wholesalers) |
| 4233 | Lumber and Other Construction Materials Merchant Wholesalers | | | |
| 42331 | Lumber, Plywood, Millwork, and Wood Panel Merchant Wholesalers | R | *421310 | Lumber, Plywood, Millwork, and Wood Panel Wholesalers (merchant wholesalers) |
| 42332 | Brick, Stone, and Related Construction Material Merchant Wholesalers | R | *421320 | Brick, Stone, and Related Construction Material Wholesalers (merchant wholesalers) |

| | | | | |
|---|---|---|---|---|
| 42333 | Roofing, Siding, and Insulation Material Merchant Wholesalers | R | *421330 | Roofing, Siding, and Insulation Material Wholesalers (merchant wholesalers) |
| 42339 | Other Construction Material Merchant Wholesalers | R | *421390 | Other Construction Material Wholesalers (merchant wholesalers) |
| 4234 | Professional and Commercial Equipment and Supplies Merchant Wholesalers | | | |
| 42341 | Photographic Equipment and Supplies Merchant Wholesalers | R | *421410 | Photographic Equipment and Supplies Wholesalers (merchant wholesalers) |
| 42342 | Office Equipment Merchant Wholesalers | R | *421420 | Office Equipment Wholesalers (merchant wholesalers) |
| 42343 | Computer and Computer Peripheral Equipment and Software Merchant Wholesalers | R | *421430 | Computer and Computer Peripheral Equipment and Software Wholesalers (merchant wholesalers) |
| 42344 | Other Commercial Equipment Merchant Wholesalers | R | *421440 | Other Commercial Equipment Wholesalers (merchant wholesalers) |
| 42345 | Medical, Dental, and Hospital Equipment and Supplies Merchant Wholesalers | R | *421450 | Medical, Dental, and Hospital Equipment and Supplies Wholesalers (merchant wholesalers) |
| 42346 | Ophthalmic Goods Merchant Wholesalers | R | *421460 | Ophthalmic Goods Wholesalers (merchant wholesalers) |
| 42349 | Other Professional Equipment and Supplies Merchant Wholesalers | R | *421490 | Other Professional Equipment and Supplies Wholesalers (merchant wholesalers) |
| 4235 | Metal and Mineral (except Petroleum) Merchant Wholesalers | | | |
| 42351 | Metal Service Centers and Other Metal Merchant Wholesalers | R | *421510 | Metal Service Centers and Offices (merchant wholesalers) |
| 42352 | Coal and Other Mineral and Ore Merchant Wholesalers | R | *421520 | Coal and Other Mineral and Ore Wholesalers (merchant wholesalers) |
| 4236 | Electrical and Electronic Goods Merchant Wholesalers | | | |
| 42361 | Electrical Apparatus and Equipment, Wiring Supplies, and Related Equipment Merchant Wholesalers | R | *421610 | Electrical Apparatus and Equipment, Wiring Supplies, and Construction Material Wholesalers (merchant wholesalers) |
| 42362 | Electrical and Electronic Appliance, Television, and Radio Set Merchant Wholesalers | R | *421620 | Electrical Appliance, Television, and Radio Set Wholesalers (merchant wholesalers) |
| 42369 | Other Electronic Parts and Equipment Merchant Wholesalers | R | *421690 | Other Electronic Parts and Equipment Wholesalers (merchant wholesalers) |
| 4237 | Hardware, and Plumbing and Heating Equipment and Supplies Merchant Wholesalers | | | |
| 42371 | Hardware Merchant Wholesalers | R | *421710 | Hardware Wholesalers (merchant wholesalers) |
| 42372 | Plumbing and Heating Equipment and Supplies (Hydronics) Merchant Wholesalers | R | *421720 | Plumbing and Heating Equipment and Supplies (Hydronics) Wholesalers (merchant wholesalers) |
| 42373 | Warm Air Heating and Air-Conditioning Equipment and Supplies Merchant Wholesalers | R | *421730 | Warm Air Heating and Air-Conditioning Equipment and Supplies Wholesalers (merchant wholesalers) |
| 42374 | Refrigeration Equipment and Supplies Merchant Wholesalers | R | *421740 | Refrigeration Equipment and Supplies Wholesalers (merchant wholesalers) |
| 4238 | Machinery, Equipment, and Supplies Merchant Wholesalers | | | |
| 42381 | Construction and Mining (except Oil Well) Machinery and Equipment Merchant Wholesalers | R | *421810 | Construction and Mining (except Oil Well) Machinery and Equipment Wholesalers (merchant wholesalers) |

| | | | | |
|---|---|---|---|---|
| 42382 | Farm and Garden Machinery and Equipment Merchant Wholesalers | R | *421820 | Farm and Garden Machinery and Equipment Wholesalers (merchant wholesalers) |
| 42383 | Industrial Machinery and Equipment Merchant Wholesalers | R | *421830 | Industrial Machinery and Equipment Wholesalers (merchant wholesalers) |
| 42384 | Industrial Supplies Merchant Wholesalers | R | *421840 | Industrial Supplies Wholesalers (merchant wholesalers) |
| 42385 | Service Establishment Equipment and Supplies Merchant Wholesalers | R | *421850 | Service Establishment Equipment and Supplies Wholesalers (merchant wholesalers) |
| 42386 | Transportation Equipment and Supplies (except Motor Vehicle) Merchant Wholesalers | R | *421860 | Transportation Equipment and Supplies (except Motor Vehicle) Wholesalers (merchant wholesalers) |
| 4239 | Miscellaneous Durable Goods Merchant Wholesalers | | | |
| 42391 | Sporting and Recreational Goods and Supplies Merchant Wholesalers | R | *421910 | Sporting and Recreational Goods and Supplies Wholesalers (merchant wholesalers) |
| 42392 | Toy and Hobby Goods and Supplies Merchant Wholesalers | R | *421920 | Toy and Hobby Goods and Supplies Wholesalers (merchant wholesalers) |
| 42393 | Recyclable Material Merchant Wholesalers | R | *421930 | Recyclable Material Wholesalers (merchant wholesalers) |
| 42394 | Jewelry, Watch, Precious Stone, and Precious Metal Merchant Wholesalers | R | *421940 | Jewelry, Watch, Precious Stone, and Precious Metal Wholesalers (merchant wholesalers) |
| 42399 | Other Miscellaneous Durable Goods Merchant Wholesalers | R | *421990 | Other Miscellaneous Durable Goods Wholesalers (merchant wholesalers) |
| 424 | Merchant Wholesalers, Nondurable Goods | | | |
| 4241 | Paper and Paper Product Merchant Wholesalers | | | |
| 42411 | Printing and Writing Paper Merchant Wholesalers | R | *422110 | Printing and Writing Paper Wholesalers (merchant wholesalers) |
| 42412 | Stationary and Office Supplies Merchant Wholesalers | R | *422120 | Stationary and Office Supplies Wholesalers (merchant wholesalers) |
| 42413 | Industrial and Personal Service Paper Merchant Wholesalers | R | *422130 | Industrial and Personal Service Paper Wholesalers (merchant wholesalers) |
| 4242 | Drugs and Druggists' Sundries Merchant Wholesalers | | | |
| 42421 | Drugs and Druggists' Sundries Merchant Wholesalers | R | *422210 | Drugs and Druggists' Sundries Wholesalers (merchant wholesalers) |
| 4243 | Apparel, Piece Goods, and Notions Merchant Wholesalers | | | |
| 42431 | Piece Goods, Notions, and Other Dry Goods Merchant Wholesalers | R | *422310 | Piece Goods, Notions, and Other Dry Goods Wholesalers (merchant wholesalers) |
| 42432 | Men's and Boys' Clothing and Furnishings Merchant Wholesalers | R | *422320 | Men's and Boys' Clothing and Furnishings Wholesalers (merchant wholesalers) |
| 42433 | Women's, Children's, and Infants' Clothing and Accessories Merchant Wholesalers | R | *422330 | Women's, Children's, and Infants' Clothing and Accessories Wholesalers (merchant wholesalers) |
| 42434 | Footwear Merchant Wholesalers | R | *422340 | Footwear Wholesalers (merchant wholesalers) |
| 4244 | Grocery and Related Product Merchant Wholesalers | | | |
| 42441 | General Line Grocery Merchant Wholesalers | R | *422410 | General Line Grocery Wholesalers (merchant wholesalers) |
| 42442 | Packaged Frozen Food Merchant Wholesalers | R | *422420 | Packaged Frozen Food Wholesalers (merchant wholesalers) |
| 42443 | Dairy Product (except Dried or Canned) Merchant Wholesalers | R | *422430 | Dairy Product (except Dried or Canned) Wholesalers (merchant wholesalers) |
| 42444 | Poultry and Poultry Product Merchant Wholesalers | R | *422440 | Poultry and Poultry Product Wholesalers (merchant wholesalers) |
| 42445 | Confectionery Merchant Wholesalers | R | *422450 | Confectionery Wholesalers (merchant wholesalers) |
| 42446 | Fish and Seafood Merchant Wholesalers | R | *422460 | Fish and Seafood Wholesalers (merchant wholesalers) |
| 42447 | Meat and Meat Product Merchant Wholesalers | R | *422470 | Meat and Meat Product Wholesalers (merchant wholesalers) |
| 42448 | Fresh Fruit and Vegetable Merchant Wholesalers | R | *422480 | Fresh Fruit and Vegetable Wholesalers (merchant wholesalers) |
| 42449 | Other Grocery and Related Products Merchant Wholesalers | R | *422490 | Other Grocery and Related Products Wholesalers (merchant wholesalers) |

| | | | | |
|---|---|---|---|---|
| 4245 | Farm Product Raw Material Merchant Wholesalers | | | |
| 42451 | Grain and Field Bean Merchant Wholesalers | R | *422510 | Grain and Field Bean Wholesalers (merchant wholesalers) |
| 42452 | Livestock Merchant Wholesalers | R | *422520 | Livestock Wholesalers (merchant wholesalers) |
| 42459 | Other Farm Product Raw Material Merchant Wholesalers | R | *422590 | Other Farm Product Raw Material Wholesalers (merchant wholesalers) |
| 4246 | Chemical and Allied Products Merchant Wholesalers | | | |
| 42461 | Plastics Materials and Basic Forms and Shapes Merchant Wholesalers | R | *422610 | Plastics Materials and Basic Forms and Shapes Wholesalers (merchant wholesalers) |
| 42469 | Other Chemical and Allied Products Merchant Wholesalers | R | *422690 | Other Chemical and Allied Products Wholesalers (merchant wholesalers) |
| 4247 | Petroleum and Petroleum Products Merchant Wholesalers | | | |
| 42471 | Petroleum Bulk Stations and Terminals | E | 422710 | Petroleum Bulk Stations and Terminals |
| 42472 | Petroleum and Petroleum Products Merchant Wholesalers (except Bulk Stations and Terminals) | R | *422720 | Petroleum and Petroleum Products Wholesalers (except Bulk Stations and Terminals) (merchant wholesalers) |
| 4248 | Beer, Wine, and Distilled Alcoholic Beverage Merchant Wholesalers | | | |
| 42481 | Beer and Ale Merchant Wholesalers | R | *422810 | Beer and Ale Wholesalers (merchant wholesalers) |
| 42482 | Wine and Distilled Alcoholic Beverage Merchant Wholesalers | R | *422820 | Wine and Distilled Alcoholic Beverage Wholesalers (merchant wholesalers) |
| 4249 | Miscellaneous Nondurable Goods Merchant Wholesalers | | | |
| 42491 | Farm Supplies Merchant Wholesalers | R | *422910 | Farm Supplies Wholesalers (merchant wholesalers) |
| 42492 | Book, Periodical, and Newspaper Merchant Wholesalers | R | *422920 | Book, Periodical, and Newspaper Wholesalers (merchant wholesalers) |
| 42493 | Flower, Nursery Stock, and Florists' Supplies Merchant Wholesalers | R | *422930 | Flower, Nursery Stock, and Florists' Supplies Wholesalers (merchant wholesalers) |
| 42494 | Tobacco and Tobacco Product Merchant Wholesalers | R | *422940 | Tobacco and Tobacco Product Wholesalers (merchant wholesalers) |
| 42495 | Paint, Varnish, and Supplies Merchant Wholesalers | R | *422950 | Paint, Varnish, and Supplies Wholesalers (merchant wholesalers) |
| 42499 | Other Miscellaneous Nondurable Goods Merchant Wholesalers | R | *422990 | Other Miscellaneous Nondurable Goods Wholesalers (merchant wholesalers) |
| 425 | Wholesale Electronic Markets and Agents and Brokers | | | |
| 4251 | Wholesale Electronic Markets and Agents and Brokers | | | |
| 42511 | Business to Business Electronic Markets | N | *421110 | Automobile and Other Motor Vehicle Wholesalers (electronic markets) |
| | | | *421120 | Motor Vehicle Supplies and New Parts Wholesalers (electronic markets) |
| | | | *421130 | Tire and Tube Wholesalers (electronic markets) |
| | | | *421140 | Motor Vehicle Parts (Used) Wholesalers (electronic markets) |
| | | | *421210 | Furniture Wholesalers (electronic markets) |
| | | | *421220 | Home Furnishing Wholesalers (electronic markets) |
| | | | *421310 | Lumber, Plywood, Millwork, and Wood Panel Wholesalers (electronic markets) |
| | | | *421320 | Brick, Stone, and Related Construction Material Wholesalers (electronic markets) |
| | | | *421330 | Roofing, Siding, and Insulation Material Wholesalers (electronic markets) |
| | | | *421390 | Other Construction Material Wholesalers (electronic markets) |
| | | | *421410 | Photographic Equipment and Supplies Wholesalers (electronic markets) |
| | | | *421420 | Office Equipment Wholesalers (electronic markets) |
| | | | *421430 | Computer and Computer Peripheral Equipment and Software Wholesalers (electronic markets) |
| | | | *421440 | Other Commercial Equipment Wholesalers (electronic markets) |
| | | | *421450 | Medical, Dental, and Hospital Equipment and Supplies Wholesalers (electronic markets) |
| | | | *421460 | Ophthalmic Goods Wholesalers (electronic markets) |
| | | | *421490 | Other Professional Equipment and Supplies Wholesalers (electronic markets) |
| | | | *421510 | Metal Service Centers and Offices (electronic markets) |
| | | | *421520 | Coal and Other Mineral and Ore Wholesalers (electronic markets) |
| | | | *421610 | Electrical Apparatus and Equipment, Wiring Supplies, and Construction Material Wholesalers (electronic markets) |

| | | |
|---|---|---|
| 42511 | Business to Business Electronic Markets (continued) | *421620 Electrical Appliance, Television, and Radio Set Wholesalers (electronic markets) |
| | | *421690 Other Electronic Parts and Equipment Wholesalers (electronic markets) |
| | | *421710 Hardware Wholesalers (electronic markets) |
| | | *421720 Plumbing and Heating Equipment and Supplies (Hydronics) Wholesalers (electronic markets) |
| | | *421730 Warm Air Heating and Air-Conditioning Equipment and Supplies Wholesalers (electronic markets) |
| | | *421740 Refrigeration Equipment and Supplies Wholesalers (electronic markets) |
| | | *421810 Construction and Mining (except Oil Well) Machinery and Equipment Wholesalers (electronic markets) |
| | | *421820 Farm and Garden Machinery and Equipment Wholesalers (electronic markets) |
| | | *421830 Industrial Machinery and Equipment Wholesalers (electronic markets) |
| | | *421840 Industrial Supplies Wholesalers (electronic markets) |
| | | *421850 Service Establishment Equipment and Supplies Wholesalers (electronic markets) |
| | | *421860 Transportation Equipment and Supplies (except Motor Vehicle) Wholesalers (electronic markets) |
| | | *421910 Sporting and Recreational Goods and Supplies Wholesalers (electronic markets) |
| | | *421920 Toy and Hobby Goods and Supplies Wholesalers (electronic markets) |
| | | *421930 Recyclable Material Wholesalers (electronic markets) |
| | | *421940 Jewelry, Watch, Precious Stone, and Precious Metal Wholesalers (electronic markets) |
| | | *421990 Other Miscellaneous Durable Goods Wholesalers (electronic markets) |
| | | *422110 Printing and Writing Paper Wholesalers (electronic markets) |
| | | *422120 Stationary and Office Supplies Wholesalers (electronic markets) |
| | | *422130 Industrial and Personal Service Paper Wholesalers (electronic markets) |
| | | *422210 Drugs and Druggists' Sundries Wholesalers (electronic markets) |
| | | *422310 Piece Goods, Notions, and Other Dry Goods Wholesalers (electronic markets) |
| | | *422320 Men's and Boys' Clothing and Furnishings Wholesalers (electronic markets) |
| | | *422330 Women's, Children's, and Infants' Clothing and Accessories Wholesalers (electronic markets) |
| | | *422340 Footwear Wholesalers (electronic markets) |
| | | *422410 General Line Grocery Wholesalers (electronic markets) |
| | | *422420 Packaged Frozen Food Wholesalers (electronic markets) |
| | | *422430 Dairy Product (except Dried or Canned) Wholesalers (electronic markets) |
| | | *422440 Poultry and Poultry Product Wholesalers (electronic markets) |
| | | *422450 Confectionery Wholesalers (electronic markets) |
| | | *422460 Fish and Seafood Wholesalers (electronic markets) |
| | | *422470 Meat and Meat Product Wholesalers (electronic markets) |
| | | *422480 Fresh Fruit and Vegetable Wholesalers (electronic markets) |
| | | *422490 Other Grocery and Related Products Wholesalers (electronic markets) |
| | | *422510 Grain and Field Bean Wholesalers (electronic markets) |
| | | *422520 Livestock Wholesalers (electronic markets) |
| | | *422590 Other Farm Product Raw Material Wholesalers (electronic markets) |
| | | *422610 Plastics Materials and Basic Forms and Shapes Wholesalers (electronic markets) |
| | | *422690 Other Chemical and Allied Products Wholesalers (electronic markets) |
| | | *422720 Petroleum and Petroleum Products Wholesalers (except Bulk Stations and Terminals) (electronic markets) |
| | | *422810 Beer and Ale Wholesalers (electronic markets) |
| | | *422820 Wine and Distilled Alcoholic Beverage Wholesalers (electronic markets) |
| | | *422910 Farm Supplies Wholesalers (electronic markets) |
| | | *422920 Book, Periodical, and Newspaper Wholesalers (electronic markets) |
| | | *422930 Flower, Nursery Stock, and Florists' Supplies Wholesalers (electronic markets) |

| | | | |
|---|---|---|---|
| 42511 | Business to Business Electronic Markets (continued) | | *422940 Tobacco and Tobacco Product Wholesalers (electronic markets) |
| | | | *422950 Paint, Varnish, and Supplies Wholesalers (electronic markets) |
| | | | *422990 Other Miscellaneous Nondurable Goods Wholesalers (electronic markets) |
| 42512 | Wholesale Trade Agents and Brokers | | |
| | | N | *421110 Automobile and Other Motor Vehicle Wholesalers (agents and brokers) |
| | | | *421120 Motor Vehicle Supplies and New Parts Wholesalers (agents and brokers) |
| | | | *421130 Tire and Tube Wholesalers (agents and brokers) |
| | | | *421140 Motor Vehicle Parts (Used) Wholesalers (agents and brokers) |
| | | | *421210 Furniture Wholesalers (agents and brokers) |
| | | | *421220 Home Furnishing Wholesalers (agents and brokers) |
| | | | *421310 Lumber, Plywood, Millwork, and Wood Panel Wholesalers (agents and brokers) |
| | | | *421320 Brick, Stone, and Related Construction Material Wholesalers (agents and brokers) |
| | | | *421330 Roofing, Siding, and Insulation Material Wholesalers (agents and brokers) |
| | | | *421390 Other Construction Material Wholesalers (agents and brokers) |
| | | | *421410 Photographic Equipment and Supplies Wholesalers (agents and brokers) |
| | | | *421420 Office Equipment Wholesalers (agents and brokers) |
| | | | *421430 Computer and Computer Peripheral Equipment and Software Wholesalers (agents and brokers) |
| | | | *421440 Other Commercial Equipment Wholesalers (agents and brokers) |
| | | | *421450 Medical, Dental, and Hospital Equipment and Supplies Wholesalers (agents and brokers) |
| | | | *421460 Ophthalmic Goods Wholesalers (agents and brokers) |
| | | | *421490 Other Professional Equipment and Supplies Wholesalers (agents and brokers) |
| | | | *421510 Metal Service Centers and Offices (agents and brokers) |
| | | | *421520 Coal and Other Mineral and Ore Wholesalers (agents and brokers) |
| | | | *421610 Electrical Apparatus and Equipment, Wiring Supplies, and Construction Material Wholesalers (agents and brokers) |
| | | | *421620 Electrical Appliance, Television, and Radio Set Wholesalers (agents and brokers) |
| | | | *421690 Other Electronic Parts and Equipment Wholesalers (agents and brokers) |
| | | | *421710 Hardware Wholesalers (agents and brokers) |
| | | | *421720 Plumbing and Heating Equipment and Supplies (Hydronics) Wholesalers (agents and brokers) |
| | | | *421730 Warm Air Heating and Air-Conditioning Equipment and Supplies Wholesalers (agents and brokers) |
| | | | *421740 Refrigeration Equipment and Supplies Wholesalers (agents and brokers) |
| | | | *421810 Construction and Mining (except Oil Well) Machinery and Equipment Wholesalers (agents and brokers) |
| | | | *421820 Farm and Garden Machinery and Equipment Wholesalers (agents and brokers) |
| | | | *421830 Industrial Machinery and Equipment Wholesalers (agents and brokers) |
| | | | *421840 Industrial Supplies Wholesalers (agents and brokers) |
| | | | *421850 Service Establishment Equipment and Supplies Wholesalers (agents and brokers) |
| | | | *421860 Transportation Equipment and Supplies (except Motor Vehicle) Wholesalers (agents and brokers) |
| | | | *421910 Sporting and Recreational Goods and Supplies Wholesalers (agents and brokers) |
| | | | *421920 Toy and Hobby Goods and Supplies Wholesalers (agents and brokers) |
| | | | *421930 Recyclable Material Wholesalers (agents and brokers) |
| | | | *421940 Jewelry, Watch, Precious Stone, and Precious Metal Wholesalers (agents and brokers) |
| | | | *421990 Other Miscellaneous Durable Goods Wholesalers (agents and brokers) |
| | | | *422110 Printing and Writing Paper Wholesalers (agents and brokers) |
| | | | *422120 Stationary and Office Supplies Wholesalers (agents and brokers) |
| | | | *422130 Industrial and Personal Service Paper Wholesalers (agents and brokers) |

| | | | | |
|---|---|---|---|---|
| 42512 | Wholesale Trade Agents and Brokers (continued) | | *422210 | Drugs and Druggists' Sundries Wholesalers (agents and brokers) |
| | | | *422310 | Piece Goods, Notions, and Other Dry Goods Wholesalers (agents and brokers) |
| | | | *422320 | Men's and Boys' Clothing and Furnishings Wholesalers (agents and brokers) |
| | | | *422330 | Women's, Children's, and Infants' Clothing and Accessories Wholesalers (agents and brokers) |
| | | | *422340 | Footwear Wholesalers (agents and brokers) |
| | | | *422410 | General Line Grocery Wholesalers (agents and brokers) |
| | | | *422420 | Packaged Frozen Food Wholesalers (agents and brokers) |
| | | | *422430 | Dairy Product (except Dried or Canned) Wholesalers (agents and brokers) |
| | | | *422440 | Poultry and Poultry Product Wholesalers (agents and brokers) |
| | | | *422450 | Confectionery Wholesalers (agents and brokers) |
| | | | *422460 | Fish and Seafood Wholesalers (agents and brokers) |
| | | | *422470 | Meat and Meat Product Wholesalers (agents and brokers) |
| | | | *422480 | Fresh Fruit and Vegetable Wholesalers (agents and brokers) |
| | | | *422490 | Other Grocery and Related Products Wholesalers (agents and brokers) |
| | | | *422510 | Grain and Field Bean Wholesalers (agents and brokers) |
| | | | *422520 | Livestock Wholesalers (agents and brokers) |
| | | | *422590 | Other Farm Product Raw Material Wholesalers (agents and brokers) |
| | | | *422610 | Plastics Materials and Basic Forms and Shapes Wholesalers (agents and brokers) |
| | | | *422690 | Other Chemical and Allied Products Wholesalers (agents and brokers) |
| | | | *422720 | Petroleum and Petroleum Products Wholesalers (except Bulk Stations and Terminals) (agents and brokers) |
| | | | *422810 | Beer and Ale Wholesalers (agents and brokers) |
| | | | *422820 | Wine and Distilled Alcoholic Beverage Wholesalers (agents and brokers) |
| | | | *422910 | Farm Supplies Wholesalers (agents and brokers) |
| | | | *422920 | Book, Periodical, and Newspaper Wholesalers (agents and brokers) |
| | | | *422930 | Flower, Nursery Stock, and Florists' Supplies Wholesalers (agents and brokers) |
| | | | *422940 | Tobacco and Tobacco Product Wholesalers (agents and brokers) |
| | | | *422950 | Paint, Varnish, and Supplies Wholesalers (agents and brokers) |
| | | | *422990 | Other Miscellaneous Nondurable Goods Wholesalers (agents and brokers) |
| 4521 | Department Stores | | | |
| 45211 | Department Stores | | | |
| 452111 | Department Stores (except Discount Department Stores) | R | *452110 | Department Stores (except discount department stores) |
| 452112 | Discount Department Stores | N | *452110 | Department Stores (discount department stores) |
| 4541 | Electronic Shopping and Mail-Order Houses | | | |
| 45411 | Electronic Shopping and Mail-Order Houses | | | |
| 454111 | Electronic Shopping | N | *454110 | Electronic Shopping and Mail-Order Houses (electronic shopping) |
| 454112 | Electronic Auctions | N | *454110 | Electronic Shopping and Mail-Order Houses (Internet auctions) |
| 454113 | Mail-Order Houses | R | *454110 | Electronic Shopping and Mail-Order Houses (except electronic shopping and Internet auctions) |
| 51 | Information | | | |
| 511 | Publishing Industries (except Internet) | | | |
| 5111 | Newspaper, Periodical, Book, and Directory Publishers | | | |
| 51111 | Newspaper Publishers | R | *511110 | Newspaper Publishers (except Internet publishing) |
| 51112 | Periodical Publishers | R | *511120 | Periodical Publishers (except Internet publishing) |

| | | | | |
|---|---|---|---|---|
| 51113 | Book Publishers | R | *511130 | Book Publishers (except Internet publishing) |
| 51114 | Directory and Mailing List Publishers | R | *511140 | Database and Directory Publishers (except Internet publishing) |
| 51119 | Other Publishers | | | |
| 511191 | Greeting Card Publishers | R | *511191 | Greeting Card Publishers (except Internet publishing) |
| 511199 | All Other Publishers | R | *511199 | All Other Publishers (except Internet publishing) |
| 5112 | Software Publishers | | | |
| 51121 | Software Publishers | E | 511210 | Software Publishers |
| 512 | Motion Picture and Sound Recording Industries | | | |
| 5121 | Motion Picture and Video Industries | | | |
| 51211 | Motion Picture and Video Production | E | 512110 | Motion Picture and Video Production |
| 51212 | Motion Picture and Video Distribution | E | 512120 | Motion Picture and Video Distribution |
| 51213 | Motion Picture and Video Exhibition | | | |
| 512131 | Motion Picture Theaters (except Drive-Ins) | E | 512131 | Motion Picture Theaters (except Drive-Ins) |
| 512132 | Drive-In Motion Picture Theaters | E | 512132 | Drive-In Motion Picture Theaters |
| 51219 | Post Production Services and Other Motion Picture and Video Industries | | | |
| 512191 | Teleproduction and Other Postproduction Services | E | 512191 | Teleproduction and Other Postproduction Services |
| 512199 | Other Motion Picture and Video Industries | E | 512199 | Other Motion Picture Industries |
| 5122 | Sound Recording Industries | | | |
| 51221 | Record Production | E | 512210 | Record Production |
| 51222 | Integrated Record Production/Distribution | E | 512220 | Integrated Record Production/Distribution |
| 51223 | Music Publishers | E | 512230 | Music Publishers |
| 51224 | Sound Recording Studios | E | 512240 | Sound Recording Studios |
| 51229 | Other Sound Recording Industries | E | 512290 | Other Sound Recording Industries |
| 515 | Broadcasting (except Internet) | | | |
| 5151 | Radio and Television Broadcasting | | | |
| 51511 | Radio Broadcasting | | | |
| 515111 | Radio Networks | E | 513111 | Radio Networks |
| 515112 | Radio Stations | E | 513112 | Radio Stations |
| 51512 | Television Broadcasting | E | 513120 | Television Broadcasting |
| 5152 | Cable and Other Subscription Programming | | | |
| 51521 | Cable and Other Subscription Programming | E | 513210 | Cable Networks |
| 516 | Internet Publishing and Broadcasting | | | |
| 5161 | Internet Publishing and Broadcasting | | | |
| 51611 | Internet Publishing and Broadcasting | | | |
| 516110 | Internet Publishing and Broadcasting | N | *511110 | Newspaper Publishers (Internet newspaper publishers) |
| | | | *511120 | Periodical Publishers (Internet periodical publishers) |
| | | | *511130 | Book Publishers (Internet book publishers) |
| | | | *511140 | Directory and Database Publishers (Internet directory publishers) |
| | | | *511191 | Greeting Card Publishers (Internet greeting card publishers) |
| | | | *511199 | All Other Publishers (All other Internet publishers) |
| | | | *514199 | All Other Information Services (Internet broadcasting) |
| 517 | Telecommunications | | | |
| 5171 | Wired Telecommunications Carriers | | | |
| 51711 | Wired Telecommunications Carriers | E | 513310 | Wired Telecommunications Carriers |
| 5172 | Wireless Telecommunications Carriers (except Satellite) | | | |
| 51721 | Wireless Telecommunications Carriers (except Satellite) | | | |
| 517211 | Paging | E | 513321 | Paging |
| 517212 | Cellular and Other Wireless Telecommunications | E | 513322 | Cellular and Other Wireless Communications |
| 5173 | Telecommunications Resellers | | | |

| | | | | |
|---|---|---|---|---|
| 51731 | Telecommunications Resellers | E | 513330 | Telecommunications Resellers |
| 5174 | Satellite Telecommunications | | | |
| 51741 | Satellite Telecommunications | E | 513340 | Satellite Telecommunications |
| 5175 | Cable and Other Program Distribution | | | |
| 51751 | Cable and Other Program Distribution | E | 513220 | Cable and Other Program Distribution |
| 5179 | Other Telecommunications | | | |
| 51791 | Other Telecommunications | E | 513390 | Other Telecommunications |
| 518 | Internet Service Providers, Web Search Portals, and Data Processing Services | | | |
| 5181 | Internet Service Providers and Web Search Portals | | | |
| 51811 | Internet Service Providers and Web Search Portals | | | |
| 518111 | Internet Service Providers | E | 514191 | On-Line Information Services |
| 518112 | Web Search Portals | N | *514199 | All Other Information Services (Internet search portals) |
| 5182 | Data Processing, Hosting, and Related Services | | | |
| 51821 | Data Processing, Hosting, and Related Services | E | 514210 | Data Processing Services |
| 519 | Other Information Services | | | |
| 5191 | Other Information Services | | | |
| 51911 | News Syndicates | E | 514110 | News Syndicates |
| 51912 | Libraries and Archives | E | 514120 | Libraries and Archives |
| 51919 | All Other Information Services | R | *514199 | All Other Information Services (except Internet search portals and Internet Broadcasting) |

## Table 2 - 1997 NAICS United States Matched to 2002 NAICS United States

| 1997 NAICS Code | 1997 NAICS U.S. Description | 2002 NAICS Code | 2002 NAICS and U.S. Description |
|---|---|---|---|
| 213112 | Support Activities for Oil and Gas Operations | | |
| | Construction of Field Gathering Lines On A Contract Basis | 237120 | Oil and Gas Pipeline and Related Structures Construction (pt) |
| | Site Preparation and Related Construction Activities On A Contract Basis | 238910 | Site Preparation Contractors (pt) |
| | Support Activities For Oil and Gas Operations Except Site Preparation and Related Construction Activities | 213112 | Support Activities for Oil and Gas Operations |
| 213113 | Support Activities for Coal Mining | | |
| | Site Preparation and Related Construction Activities On A Contract Basis | 238910 | Site Preparation Contractors (pt) |
| | Support Activities For Coal Mining Except Site Preparation and Related Construction Activities | 213113 | Support Activities for Coal Mining |
| 213114 | Support Activities for Metal Mining | | |
| | Site Preparation and Related Construction Activities On A Contract Basis | 238910 | Site Preparation Contractors (pt) |
| | Support Activities For Metal Mining Except Site Preparation and Related Construction Activities | 213114 | Support Activities for Metal Mining |
| 213115 | Support Activities for Nonmetallic Minerals (except Fuels) | | |
| | Site Preparation and Related Construction Activities On A Contract Basis | 238910 | Site Preparation Contractors (pt) |
| | Support Activities For Nonmetallic Mineral (Except Fuel) Mining Except Site Preparation and Related Construction Activities | 213115 | Support Activities for Nonmetallic Minerals (except Fuels) |
| 233110 | Land Subdivision and Land Development | 237210 | Land Subdivision |
| 233210 | Single Family Housing Construction | | |
| | General Contractors | 236115 | New Single-Family Housing Construction (except Operative Builders) |
| | Operative Builders | 236117 | New Housing Operative Builders (pt) |
| | Remodeling Contractors | 236118 | Residential Remodelers (pt) |

| | | | |
|---|---|---|---|
| 233220 | Multifamily Housing Construction | | |
| | General Contractors | 236116 | New Multifamily Housing Construction (except Operative Builders) |
| | Operative Builders | 236117 | New Housing Operative Builders (pt) |
| | Remodeling Contractors | 236118 | Residential Remodelers (pt) |
| | Barrack and Dormitory Construction | 236220 | Commercial and Institutional Building Construction (pt) |
| 233310 | Manufacturing and Industrial Building Construction | | |
| | Grain Elevators, Dry Cleaning Plants, and Manufacturing and Industrial Warehouses | 236220 | Commercial and Institutional Building Construction (pt) |
| | Except Grain Elevators, Dry Cleaning Plants, and Manufacturing and Industrial Warehouses | 236210 | Industrial Building Construction (pt) |
| 233320 | Commercial and Institutional Building Construction | 236220 | Commercial and Institutional Building Construction (pt) |
| 234110 | Highway and Street Construction | 237310 | Highway, Street, and Bridge Construction (pt) |
| 234120 | Bridge and Tunnel Construction | | |
| | Bridge Construction | 237310 | Highway, Street, and Bridge Construction (pt) |
| | Tunnel Construction | 237990 | Other Heavy and Civil Engineering Construction (pt) |
| 234910 | Water, Sewer, and Pipeline Construction | | |
| | Water/Sewer Pumping Stations, Sewage Collection and Disposal Lines, Storm Sewers, Sewer/Water Mains and Lines, and Water Storage Tanks and Towers, and Construction Management of these Projects | 237110 | Water and Sewer Line and Related Structures Construction (pt) |
| | Gas and Oil Pumping Stations, Gas and Oil Pipeline Construction, Gas Mains, Gas and Oil Storage Tank Construction, and Construction Management of these Projects | 237120 | Oil and Gas Pipeline and Related Structures Construction (pt) |
| 234920 | Power and Communication Transmission Line Construction | 237130 | Power and Communication Line and Related Structures Construction (pt) |
| 234930 | Industrial Nonbuilding Structure Construction | | |
| | Petrochemical Plants, Refineries, and Construction Management of these Projects | 237120 | Oil and Gas Pipeline and Related Structures Construction (pt) |
| | Power Generation Plants (excluding Hydroelectric Dams), Transmission and Distribution Transformer Stations, and Construction Management of these Projects | 237130 | Power and Communication Line and Related Structures Construction (pt) |
| | Process Batch Plants, Incinerators, Industrial Furnaces and Kilns, Mining Appurtenance, and Construction Management of these Projects | 236210 | Industrial Building Construction (pt) |
| 234990 | All Other Heavy Construction | | |
| | Waste Disposal Plant Construction | 236210 | Industrial Building Construction (pt) |
| | Irrigation Systems, Sewage Treatment and Water Treatment Plants, Construction Management of these Projects | 237110 | Water and Sewer Line and Related Structures Construction (pt) |
| | Right-of-Way Clearing and Line Slashing, Blasting, Trenching, and Equipment Rental (except cranes) with Operator | 238910 | Site Preparation Contractors (pt) |
| | Crane Rental with Operator | 238990 | All Other Specialty Trade Contractors (pt) |
| | Except Waste Disposal Plant Construction, Irrigation Systems, Sewage Treatment and Water Treatment Plants, Right-of-Way Clearing and Line Slashing, Blasting, Trenching, and Equipment Rental with Operator | 237990 | Other Heavy and Civil Engineering Construction (pt) |
| 235110 | Plumbing, Heating, and Air-Conditioning Contractors | | |
| | Environmental Controls Installation Contractors | 238210 | Electrical Contractors (pt) |
| | Septic Tank, Cesspool, and Dry Well Construction Contractors | 238910 | Site Preparation Contractors (pt) |
| | Except Environmental Controls Installation Contractors and Septic Tank, Cesspool, and Dry Well Construction Contractors | 238220 | Plumbing, Heating, and Air-Conditioning Contractors (pt) |
| 235210 | Painting and Wall Covering Contractors | | |
| | Highway and Traffic Line Painting | 237310 | Highway, Street, and Bridge Construction (pt) |
| | Except Highway and Traffic Line Painting | 238320 | Painting and Wall Covering Contractors |
| 235310 | Electrical Contractors | 238210 | Electrical Contractors (pt) |
| 235410 | Masonry and Stone Contractors | 238140 | Masonry Contractors (pt) |
| 235420 | Drywall, Plastering, Acoustical, and Insulation Contractors | | |
| | Stucco Contractors | 238140 | Masonry Contractors (pt) |
| | Except Stucco Contractors | 238310 | Drywall and Insulation Contractors |

| | | | |
|---|---|---|---|
| 235430 | Tile, Marble, Terrazzo, and Mosaic Contractors | 238340 | Tile and Terrazzo and Tile Contractors |
| 235510 | Carpentry Contractors | | |
| | Framing Carpentry | 238130 | Framing Contractors |
| | Finish Carpentry | 238350 | Finish Carpentry Contractors |
| 235520 | Floor Laying and Other Floor Contractors | 238330 | Flooring Contractors |
| 235610 | Roofing, Siding, and Sheet Metal Contractors | | |
| | Roofing Contractors | 238160 | Roofing Contractors |
| | Siding Contractors | 238170 | Siding Contractors |
| | Metal Ceiling, Panel, and Shelving Installation | 238390 | Other Building Finishing Contractors (pt) |
| 235710 | Concrete Contractors | | |
| | Residential and Commercial Asphalt, Brick, and Concrete Paving | 238990 | All Other Specialty Trade Contractors (pt) |
| | Except Residential and Commercial Asphalt, Brick, and Concrete Paving | 238110 | Poured Concrete Foundation and Structure Contractors |
| 235810 | Water Well Drilling Contractors | 237110 | Water and Sewer Line and Related Structures Construction (pt) |
| 235910 | Structural Steel Erection Contractors | | |
| | Curtain Walls and Metal Furring Installation | 238190 | Other Foundation, Structure, and Building Exterior Contractors (pt) |
| | Cooling Tower Installation | 238220 | Plumbing, Heating, and Air-Conditioning Contractors (pt) |
| | Except Curtain Walls, Metal Furring Installation, and Cooling Tower Installation | 238120 | Structural Steel and Precast Concrete Contractors |
| 235920 | Glass and Glazing Contractors | 238150 | Glass and Glazing Contractors |
| 235930 | Excavation Contractors | 238910 | Site Preparation Contractors (pt) |
| 235940 | Wrecking and Demolition Contractors | 238910 | Site Preparation Contractors (pt) |
| 235950 | Building Equipment and Other Machinery Installation Contractors | | |
| | Scrubber, Dust Collection, and Other Industrial Ventilation Installation | 238220 | Plumbing, Heating, and Air-Conditioning Contractors (pt) |
| | Except Scrubber, Dust Collection, and Other Industrial Ventilation Installation | 238290 | Other Building Equipment Contractors (pt) |
| 235990 | All Other Special Trade Contractors | | |
| | Indoor Swimming Pool Contractors | 236220 | Commercial and Institutional Building Construction (pt) |
| | Anchored Earth Retention Contractors | 237990 | Other Heavy and Civil Engineering Construction (pt) |
| | Forming Contractors | 238190 | Other Foundation, Structure, and Building Exterior Contractors (pt) |
| | Service Station Equipment Installation Contractors; Boiler, Duct, and Pipe Insulation; Lightning Rod Installation; Bowling Alley Installation; Household-Type Antenna Installation; Church Bell Installation; and Tower Clock Installation | 238290 | Other Building Equipment Contractors (pt) |
| | Weather Stripping and Damp-Proofing, Modular Furniture Installation, Bathtub Refinishing, Window Covering Fixture Installation, Trade Show Exhibit Installation and Dismantling, and Spectator Seating Installation | 238390 | Other Building Finishing Contractors (pt) |
| | Dewatering Contractors, Core Drilling For Construction, and Test Boring for Construction | 238910 | Site Preparation Contractors (pt) |
| | Except Indoor Swimming Pools, Earth Retention Contractors, Forming Contractors, Ornamental Metal Work, Building Equipment Contractors, Building Finishing Contractors, Dewatering Contractors, Test Boring For Construction, and Core Drilling For Construction | 238990 | All Other Specialty Trade Contractors (pt) |
| 421110 | Automobile and Other Motor Vehicle Wholesalers | | |
| | Merchant Wholesalers | 423110 | Automobile and Other Motor Vehicle Merchant Wholesalers |
| | Business to Business Electronic Markets | 425110 | Business to Business Electronic Markets (pt) |
| | Agents and Brokers | 425120 | Wholesale Trade Agents and Brokers (pt) |
| 421120 | Motor Vehicle Supplies and New Parts Wholesalers | | |
| | Merchant Wholesalers | 423120 | Motor Vehicle Supplies and New Parts Merchant Wholesalers |
| | Business to Business Electronic Markets | 425110 | Business to Business Electronic Markets (pt) |
| | Agents and Brokers | 425120 | Wholesale Trade Agents and Brokers (pt) |
| 421130 | Tire and Tube Wholesalers | | |
| | Merchant Wholesalers | 423130 | Tire and Tube Merchant Wholesalers |
| | Business to Business Electronic Markets | 425110 | Business to Business Electronic Markets (pt) |
| | Agents and Brokers | 425120 | Wholesale Trade Agents and Brokers (pt) |

| | | | |
|---|---|---|---|
| 421140 | Motor Vehicle Parts (Used) Wholesalers | | |
| | Merchant Wholesalers | 423140 | Motor Vehicle Parts (Used) Merchant Wholesalers |
| | Business to Business Electronic Markets | 425110 | Business to Business Electronic Markets (pt) |
| | Agents and Brokers | 425120 | Wholesale Trade Agents and Brokers (pt) |
| 421210 | Furniture Wholesalers | | |
| | Merchant Wholesalers | 423210 | Furniture Merchant Wholesalers |
| | Business to Business Electronic Markets | 425110 | Business to Business Electronic Markets (pt) |
| | Agents and Brokers | 425120 | Wholesale Trade Agents and Brokers (pt) |
| 421220 | Home Furnishing Wholesalers | | |
| | Merchant Wholesalers | 423220 | Home Furnishing Merchant Wholesalers |
| | Business to Business Electronic Markets | 425110 | Business to Business Electronic Markets (pt) |
| | Agents and Brokers | 425120 | Wholesale Trade Agents and Brokers (pt) |
| 421310 | Lumber, Plywood, Millwork, and Wood Panel Wholesalers | | |
| | Merchant Wholesalers | 423310 | Lumber, Plywood, Millwork, and Wood Panel Merchant Wholesalers |
| | Business to Business Electronic Markets | 425110 | Business to Business Electronic Markets (pt) |
| | Agents and Brokers | 425120 | Wholesale Trade Agents and Brokers (pt) |
| 421320 | Brick, Stone, and Related Construction Material Wholesalers | | |
| | Merchant Wholesalers | 423320 | Brick, Stone, and Related Construction Material Merchant Wholesalers |
| | Business to Business Electronic Markets | 425110 | Business to Business Electronic Markets (pt) |
| | Agents and Brokers | 425120 | Wholesale Trade Agents and Brokers (pt) |
| 421330 | Roofing, Siding, and Insulation Material Wholesalers | | |
| | Merchant Wholesalers | 423330 | Roofing, Siding, and Insulation Material Merchant Wholesalers |
| | Business to Business Electronic Markets | 425110 | Business to Business Electronic Markets (pt) |
| | Agents and Brokers | 425120 | Wholesale Trade Agents and Brokers (pt) |
| 421390 | Other Construction Material Wholesalers | | |
| | Merchant Wholesalers | 423390 | Other Construction Material Merchant Wholesalers |
| | Business to Business Electronic Markets | 425110 | Business to Business Electronic Markets (pt) |
| | Agents and Brokers | 425120 | Wholesale Trade Agents and Brokers (pt) |
| 421410 | Photographic Equipment and Supplies Wholesalers | | |
| | Merchant Wholesalers | 423410 | Photographic Equipment and Supplies Merchant Wholesalers |
| | Business to Business Electronic Markets | 425110 | Business to Business Electronic Markets (pt) |
| | Agents and Brokers | 425120 | Wholesale Trade Agents and Brokers (pt) |
| 421420 | Office Equipment Wholesalers | | |
| | Merchant Wholesalers | 423420 | Office Equipment Merchant Wholesalers |
| | Business to Business Electronic Markets | 425110 | Business to Business Electronic Markets (pt) |
| | Agents and Brokers | 425120 | Wholesale Trade Agents and Brokers (pt) |
| 421430 | Computer and Computer Peripheral Equipment and Software Wholesalers | | |
| | Merchant Wholesalers | 423430 | Computer and Computer Peripheral Equipment and Software Merchant Wholesalers |
| | Business to Business Electronic Markets | 425110 | Business to Business Electronic Markets (pt) |
| | Agents and Brokers | 425120 | Wholesale Trade Agents and Brokers (pt) |
| 421440 | Other Commercial Equipment Wholesalers | | |
| | Merchant Wholesalers | 423440 | Other Commercial Equipment Merchant Wholesalers |
| | Business to Business Electronic Markets | 425110 | Business to Business Electronic Markets (pt) |
| | Agents and Brokers | 425120 | Wholesale Trade Agents and Brokers (pt) |
| 421450 | Medical, Dental, and Hospital Equipment and Supplies Wholesalers | | |
| | Merchant Wholesalers | 423450 | Medical, Dental, and Hospital Equipment and Supplies Merchant Wholesalers |
| | Business to Business Electronic Markets | 425110 | Business to Business Electronic Markets (pt) |
| | Agents and Brokers | 425120 | Wholesale Trade Agents and Brokers (pt) |

| | | | |
|---|---|---|---|
| 421460 | Ophthalmic Goods Wholesalers | | |
| | Merchant Wholesalers | 423460 | Ophthalmic Goods Merchant Wholesalers |
| | Business to Business Electronic Markets | 425110 | Business to Business Electronic Markets (pt) |
| | Agents and Brokers | 425120 | Wholesale Trade Agents and Brokers (pt) |
| 421490 | Other Professional Equipment and Supplies Wholesalers | | |
| | Merchant Wholesalers | 423490 | Other Professional Equipment and Supplies Merchant Wholesalers |
| | Business to Business Electronic Markets | 425110 | Business to Business Electronic Markets (pt) |
| | Agents and Brokers | 425120 | Wholesale Trade Agents and Brokers (pt) |
| 421510 | Metal Service Centers and Offices | | |
| | Merchant Wholesalers | 423510 | Metal Service Centers and Other Metal Merchant Wholesalers |
| | Business to Business Electronic Markets | 425110 | Business to Business Electronic Markets (pt) |
| | Agents and Brokers | 425120 | Wholesale Trade Agents and Brokers (pt) |
| 421520 | Coal and Other Mineral and Ore Wholesalers | | |
| | Merchant Wholesalers | 423520 | Coal and Other Mineral and Ore Merchant Wholesalers |
| | Business to Business Electronic Markets | 425110 | Business to Business Electronic Markets (pt) |
| | Agents and Brokers | 425120 | Wholesale Trade Agents and Brokers (pt) |
| 421610 | Electrical Apparatus and Equipment, Wiring Supplies, and Construction Material Wholesalers | | |
| | Merchant Wholesalers | 423610 | Electrical Apparatus and Equipment, Wiring Supplies, and Related Equipment Merchant Wholesalers |
| | Business to Business Electronic Markets | 425110 | Business to Business Electronic Markets (pt) |
| | Agents and Brokers | 425120 | Wholesale Trade Agents and Brokers (pt) |
| 421620 | Electrical Appliance, Television, and Radio Set Wholesalers | | |
| | Merchant Wholesalers | 423620 | Electrical and Electronic Appliance, Television, and Radio Set Merchant Wholesalers |
| | Business to Business Electronic Markets | 425110 | Business to Business Electronic Markets (pt) |
| | Agents and Brokers | 425120 | Wholesale Trade Agents and Brokers (pt) |
| 421690 | Other Electronic Parts and Equipment Wholesalers | | |
| | Merchant Wholesalers | 423690 | Other Electronic Parts and Equipment Merchant Wholesalers |
| | Business to Business Electronic Markets | 425110 | Business to Business Electronic Markets (pt) |
| | Agents and Brokers | 425120 | Wholesale Trade Agents and Brokers (pt) |
| 421710 | Hardware Wholesalers | | |
| | Merchant Wholesalers | 423710 | Hardware Merchant Wholesalers |
| | Business to Business Electronic Markets | 425110 | Business to Business Electronic Markets (pt) |
| | Agents and Brokers | 425120 | Wholesale Trade Agents and Brokers (pt) |
| 421720 | Plumbing and Heating Equipment and Supplies (Hydronics) Wholesalers | | |
| | Merchant Wholesalers | 423720 | Plumbing and Heating Equipment and Supplies (Hydronics) Merchant Wholesalers |
| | Business to Business Electronic Markets | 425110 | Business to Business Electronic Markets (pt) |
| | Agents and Brokers | 425120 | Wholesale Trade Agents and Brokers (pt) |
| 421730 | Warm Air Heating and Air-Conditioning Equipment and Supplies Wholesalers | | |
| | Merchant Wholesalers | 423730 | Warm Air Heating and Air-Conditioning Equipment and Supplies Merchant Wholesalers |
| | Business to Business Electronic Markets | 425110 | Business to Business Electronic Markets (pt) |
| | Agents and Brokers | 425120 | Wholesale Trade Agents and Brokers (pt) |
| 421740 | Refrigeration Equipment and Supplies Wholesalers | | |
| | Merchant Wholesalers | 423740 | Refrigeration Equipment and Supplies Merchant Wholesalers |
| | Business to Business Electronic Markets | 425110 | Business to Business Electronic Markets (pt) |
| | Agents and Brokers | 425120 | Wholesale Trade Agents and Brokers (pt) |
| 421810 | Construction and Mining (except Oil Well) Machinery and Equipment Wholesalers | | |
| | Merchant Wholesalers | 423810 | Construction and Mining (except Oil Well) Machinery and Equipment Merchant Wholesalers |
| | Business to Business Electronic Markets | 425110 | Business to Business Electronic Markets (pt) |

| | | | |
|---|---|---|---|
| | Agents and Brokers | 425120 | Wholesale Trade Agents and Brokers (pt) |
| 421820 | Farm and Garden Machinery and Equipment Wholesalers | | |
| | Merchant Wholesalers | 423820 | Farm and Garden Machinery and Equipment Merchant Wholesalers |
| | Business to Business Electronic Markets | 425110 | Business to Business Electronic Markets (pt) |
| | Agents and Brokers | 425120 | Wholesale Trade Agents and Brokers (pt) |
| 421830 | Industrial Machinery and Equipment Wholesalers | | |
| | Merchant Wholesalers | 423830 | Industrial Machinery and Equipment Merchant Wholesalers |
| | Business to Business Electronic Markets | 425110 | Business to Business Electronic Markets (pt) |
| | Agents and Brokers | 425120 | Wholesale Trade Agents and Brokers (pt) |
| 421840 | Industrial Supplies Wholesalers | | |
| | Merchant Wholesalers | 423840 | Industrial Supplies Merchant Wholesalers |
| | Business to Business Electronic Markets | 425110 | Business to Business Electronic Markets (pt) |
| | Agents and Brokers | 425120 | Wholesale Trade Agents and Brokers (pt) |
| 421850 | Service Establishment Equipment and Supplies Wholesalers | | |
| | Merchant Wholesalers | 423850 | Service Establishment Equipment and Supplies Merchant Wholesalers |
| | Business to Business Electronic Markets | 425110 | Business to Business Electronic Markets (pt) |
| | Agents and Brokers | 425120 | Wholesale Trade Agents and Brokers (pt) |
| 421860 | Transportation Equipment and Supplies (except Motor Vehicle) Wholesalers | | |
| | Merchant Wholesalers | 423860 | Transportation Equipment and Supplies (except Motor Vehicle) Merchant Wholesalers |
| | Business to Business Electronic Markets | 425110 | Business to Business Electronic Markets (pt) |
| | Agents and Brokers | 425120 | Wholesale Trade Agents and Brokers (pt) |
| 421910 | Sporting and Recreational Goods and Supplies Wholesalers | | |
| | Merchant Wholesalers | 423910 | Sporting and Recreational Goods and Supplies Merchant Wholesalers |
| | Business to Business Electronic Markets | 425110 | Business to Business Electronic Markets (pt) |
| | Agents and Brokers | 425120 | Wholesale Trade Agents and Brokers (pt) |
| 421920 | Toy and Hobby Goods and Supplies Wholesalers | | |
| | Merchant Wholesalers | 423920 | Toy and Hobby Goods and Supplies Merchant Wholesalers |
| | Business to Business Electronic Markets | 425110 | Business to Business Electronic Markets (pt) |
| | Agents and Brokers | 425120 | Wholesale Trade Agents and Brokers (pt) |
| 421930 | Recyclable Material Wholesalers | | |
| | Merchant Wholesalers | 423930 | Recyclable Material Merchant Wholesalers |
| | Business to Business Electronic Markets | 425110 | Business to Business Electronic Markets (pt) |
| | Agents and Brokers | 425120 | Wholesale Trade Agents and Brokers (pt) |
| 421940 | Jewelry, Watch, Precious Stone, and Precious Metal Wholesalers | | |
| | Merchant Wholesalers | 423940 | Jewelry, Watch, Precious Stone, and Precious Metal Merchant Wholesalers |
| | Business to Business Electronic Markets | 425110 | Business to Business Electronic Markets (pt) |
| | Agents and Brokers | 425120 | Wholesale Trade Agents and Brokers (pt) |
| 421990 | Other Miscellaneous Durable Goods Wholesalers | | |
| | Merchant Wholesalers | 423990 | Other Miscellaneous Durable Goods Merchant Wholesalers |
| | Business to Business Electronic Markets | 425110 | Business to Business Electronic Markets (pt) |
| | Agents and Brokers | 425120 | Wholesale Trade Agents and Brokers (pt) |
| 422110 | Printing and Writing Paper Wholesalers | | |
| | Merchant Wholesalers | 424110 | Printing and Writing Paper Merchant Wholesalers |
| | Business to Business Electronic Markets | 425110 | Business to Business Electronic Markets (pt) |
| | Agents and Brokers | 425120 | Wholesale Trade Agents and Brokers (pt) |
| 422120 | Stationary and Office Supplies Wholesalers | | |
| | Merchant Wholesalers | 424120 | Stationary and Office Supplies Merchant Wholesalers |
| | Business to Business Electronic Markets | 425110 | Business to Business Electronic Markets (pt) |
| | Agents and Brokers | 425120 | Wholesale Trade Agents and Brokers (pt) |

| | | | |
|---|---|---|---|
| 422130 | Industrial and Personal Service Paper Wholesalers | | |
| | Merchant Wholesalers | 424130 | Industrial and Personal Service Paper Merchant Wholesalers |
| | Business to Business Electronic Markets | 425110 | Business to Business Electronic Markets (pt) |
| | Agents and Brokers | 425120 | Wholesale Trade Agents and Brokers (pt) |
| 422210 | Drugs and Druggists' Sundries Wholesalers | | |
| | Merchant Wholesalers | 424210 | Drugs and Druggists' Sundries Merchant Wholesalers |
| | Business to Business Electronic Markets | 425110 | Business to Business Electronic Markets (pt) |
| | Agents and Brokers | 425120 | Wholesale Trade Agents and Brokers (pt) |
| 422310 | Piece Goods, Notions, and Other Dry Goods Wholesalers | | |
| | Merchant Wholesalers | 424310 | Piece Goods, Notions, and Other Dry Goods Merchant Wholesalers |
| | Business to Business Electronic Markets | 425110 | Business to Business Electronic Markets (pt) |
| | Agents and Brokers | 425120 | Wholesale Trade Agents and Brokers (pt) |
| 422320 | Men's and Boys' Clothing and Furnishings Wholesalers | | |
| | Merchant Wholesalers | 424320 | Men's and Boys' Clothing and Furnishings Merchant Wholesalers |
| | Business to Business Electronic Markets | 425110 | Business to Business Electronic Markets (pt) |
| | Agents and Brokers | 425120 | Wholesale Trade Agents and Brokers (pt) |
| 422330 | Women's, Children's, and Infants' Clothing and Accessories Wholesalers | | |
| | Merchant Wholesalers | 424330 | Women's, Children's, and Infants' Clothing and Accessories Merchant Wholesalers |
| | Business to Business Electronic Markets | 425110 | Business to Business Electronic Markets (pt) |
| | Agents and Brokers | 425120 | Wholesale Trade Agents and Brokers (pt) |
| 422340 | Footwear Wholesalers | | |
| | Merchant Wholesalers | 424340 | Footwear Merchant Wholesalers |
| | Business to Business Electronic Markets | 425110 | Business to Business Electronic Markets (pt) |
| | Agents and Brokers | 425120 | Wholesale Trade Agents and Brokers (pt) |
| 422410 | General Line Grocery Wholesalers | | |
| | Merchant Wholesalers | 424410 | General Line Grocery Merchant Wholesalers |
| | Business to Business Electronic Markets | 425110 | Business to Business Electronic Markets (pt) |
| | Agents and Brokers | 425120 | Wholesale Trade Agents and Brokers (pt) |
| 422420 | Packaged Frozen Food Wholesalers | | |
| | Merchant Wholesalers | 424420 | Packaged Frozen Food Merchant Wholesalers |
| | Business to Business Electronic Markets | 425110 | Business to Business Electronic Markets (pt) |
| | Agents and Brokers | 425120 | Wholesale Trade Agents and Brokers (pt) |
| 422430 | Dairy Product (except Dried or Canned) Wholesalers | | |
| | Merchant Wholesalers | 424430 | Dairy Product (except Dried or Canned) Merchant Wholesalers |
| | Business to Business Electronic Markets | 425110 | Business to Business Electronic Markets (pt) |
| | Agents and Brokers | 425120 | Wholesale Trade Agents and Brokers (pt) |
| 422440 | Poultry and Poultry Product Wholesalers | | |
| | Merchant Wholesalers | 424440 | Poultry and Poultry Product Merchant Wholesalers |
| | Business to Business Electronic Markets | 425110 | Business to Business Electronic Markets (pt) |
| | Agents and Brokers | 425120 | Wholesale Trade Agents and Brokers (pt) |
| 422450 | Confectionery Wholesalers | | |
| | Merchant Wholesalers | 424450 | Confectionery Merchant Wholesalers |
| | Business to Business Electronic Markets | 425110 | Business to Business Electronic Markets (pt) |
| | Agents and Brokers | 425120 | Wholesale Trade Agents and Brokers (pt) |
| 422460 | Fish and Seafood Wholesalers | | |
| | Merchant Wholesalers | 424460 | Fish and Seafood Merchant Wholesalers |
| | Business to Business Electronic Markets | 425110 | Business to Business Electronic Markets (pt) |
| | Agents and Brokers | 425120 | Wholesale Trade Agents and Brokers (pt) |
| 422470 | Meat and Meat Product Wholesalers | | |
| | Merchant Wholesalers | 424470 | Meat and Meat Product Merchant Wholesalers |

| | | | |
|---|---|---|---|
| | Business to Business Electronic Markets | 425110 | Business to Business Electronic Markets (pt) |
| | Agents and Brokers | 425120 | Wholesale Trade Agents and Brokers (pt) |
| 422480 | Fresh Fruit and Vegetable Wholesalers | | |
| | Merchant Wholesalers | 424480 | Fresh Fruit and Vegetable Merchant Wholesalers |
| | Business to Business Electronic Markets | 425110 | Business to Business Electronic Markets (pt) |
| | Agents and Brokers | 425120 | Wholesale Trade Agents and Brokers (pt) |
| 422490 | Other Grocery and Related Products Wholesalers | | |
| | Merchant Wholesalers | 424490 | Other Grocery and Related Products Merchant Wholesalers |
| | Business to Business Electronic Markets | 425110 | Business to Business Electronic Markets (pt) |
| | Agents and Brokers | 425120 | Wholesale Trade Agents and Brokers (pt) |
| 422510 | Grain and Field Bean Wholesalers | | |
| | Merchant Wholesalers | 424510 | Grain and Field Bean Merchant Wholesalers |
| | Business to Business Electronic Markets | 425110 | Business to Business Electronic Markets (pt) |
| | Agents and Brokers | 425120 | Wholesale Trade Agents and Brokers (pt) |
| 422520 | Livestock Wholesalers | | |
| | Merchant Wholesalers | 424520 | Livestock Merchant Wholesalers |
| | Business to Business Electronic Markets | 425110 | Business to Business Electronic Markets (pt) |
| | Agents and Brokers | 425120 | Wholesale Trade Agents and Brokers (pt) |
| 422590 | Other Farm Product Raw Material Wholesalers | | |
| | Merchant Wholesalers | 424590 | Other Farm Product Raw Material Merchant Wholesalers |
| | Business to Business Electronic Markets | 425110 | Business to Business Electronic Markets (pt) |
| | Agents and Brokers | 425120 | Wholesale Trade Agents and Brokers (pt) |
| 422610 | Plastics Materials and Basic Forms and Shapes Wholesalers | | |
| | Merchant Wholesalers | 424610 | Plastics Materials and Basic Forms and Shapes Merchant Wholesalers |
| | Business to Business Electronic Markets | 425110 | Business to Business Electronic Markets (pt) |
| | Agents and Brokers | 425120 | Wholesale Trade Agents and Brokers (pt) |
| 422690 | Other Chemical and Allied Products Wholesalers | | |
| | Merchant Wholesalers | 424690 | Other Chemical and Allied Products Merchant Wholesalers |
| | Business to Business Electronic Markets | 425110 | Business to Business Electronic Markets (pt) |
| | Agents and Brokers | 425120 | Wholesale Trade Agents and Brokers (pt) |
| 422710 | Petroleum Bulk Stations and Terminals | 424710 | Petroleum Bulk Stations and Terminals |
| 422720 | Petroleum and Petroleum Products Wholesalers (except Bulk Stations and Terminals) | | |
| | Merchant Wholesalers | 424720 | Petroleum and Petroleum Products Merchant Wholesalers (except Bulk Stations and Terminals) |
| | Business to Business Electronic Markets | 425110 | Business to Business Electronic Markets (pt) |
| | Agents and Brokers | 425120 | Wholesale Trade Agents and Brokers (pt) |
| 422810 | Beer and Ale Wholesalers | | |
| | Merchant Wholesalers | 424810 | Beer and Ale Merchant Wholesalers |
| | Business to Business Electronic Markets | 425110 | Business to Business Electronic Markets (pt) |
| | Agents and Brokers | 425120 | Wholesale Trade Agents and Brokers (pt) |
| 422820 | Wine and Distilled Alcoholic Beverage Wholesalers | | |
| | Merchant Wholesalers | 424820 | Wine and Distilled Alcoholic Beverage Merchant Wholesalers |
| | Business to Business Electronic Markets | 425110 | Business to Business Electronic Markets (pt) |
| | Agents and Brokers | 425120 | Wholesale Trade Agents and Brokers (pt) |
| 422910 | Farm Supplies Wholesalers | | |
| | Merchant Wholesalers | 424910 | Farm Supplies Merchant Wholesalers |
| | Business to Business Electronic Markets | 425110 | Business to Business Electronic Markets (pt) |
| | Agents and Brokers | 425120 | Wholesale Trade Agents and Brokers (pt) |
| 422920 | Book, Periodical, and Newspaper Wholesalers | | |
| | Merchant Wholesalers | 424920 | Book, Periodical, and Newspaper Merchant Wholesalers |
| | Business to Business Electronic Markets | 425110 | Business to Business Electronic Markets (pt) |

| | | | |
|---|---|---|---|
| | Agents and Brokers | 425120 | Wholesale Trade Agents and Brokers (pt) |
| 422930 | Flower, Nursery Stock, and Florists' Supplies Wholesalers | | |
| | Merchant Wholesalers | 424930 | Flower, Nursery Stock, and Florists' Supplies Merchant Wholesalers |
| | Business to Business Electronic Markets | 425110 | Business to Business Electronic Markets (pt) |
| | Agents and Brokers | 425120 | Wholesale Trade Agents and Brokers (pt) |
| 422940 | Tobacco and Tobacco Product Wholesalers | | |
| | Merchant Wholesalers | 424940 | Tobacco and Tobacco Product Merchant Wholesalers |
| | Business to Business Electronic Markets | 425110 | Business to Business Electronic Markets (pt) |
| | Agents and Brokers | 425120 | Wholesale Trade Agents and Brokers (pt) |
| 422950 | Paint, Varnish, and Supplies Wholesalers | | |
| | Merchant Wholesalers | 424950 | Paint, Varnish, and Supplies Merchant Wholesalers |
| | Business to Business Electronic Markets | 425110 | Business to Business Electronic Markets (pt) |
| | Agents and Brokers | 425120 | Wholesale Trade Agents and Brokers (pt) |
| 422990 | Other Miscellaneous Nondurable Goods Wholesalers | | |
| | Merchant Wholesalers | 424990 | Other Miscellaneous Nondurable Goods Merchant Wholesalers |
| | Business to Business Electronic Markets | 425110 | Business to Business Electronic Markets (pt) |
| | Agents and Brokers | 425120 | Wholesale Trade Agents and Brokers (pt) |
| 452110 | Department Stores | | |
| | Department Stores (except Discount Department Stores) | 452111 | Department Stores (except Discount Department Stores) |
| | Discount Department Stores | 452112 | Discount Department Stores |
| 454110 | Electronic Shopping and Mail Order Houses | | |
| | Electronic Shopping | 454111 | Electronic Shopping |
| | Electronic Auctions | 454112 | Electronic Auctions |
| | Mail-Order Houses | 454113 | Mail-Order Houses |
| 511110 | Newspaper Publishers | | |
| | Newspaper Publishers (except Internet Publishers) | 511110 | Newspaper Publishers |
| | Internet Newspaper Publishers | 516110 | Internet Publishers (pt.) |
| 511120 | Periodical Publishers | | |
| | Periodical Publishers (except Internet Publishers) | 511120 | Periodical Publishers |
| | Internet Periodical Publishers | 516110 | Internet Publishers (pt.) |
| 511130 | Book Publishers | | |
| | Book Publishers (except Internet Publishers) | 511130 | Book Publishers |
| | Internet Book Publishers | 516110 | Internet Publishers (pt.) |
| 511140 | Database and Directory Publishers | | |
| | Database and Directory Publishers (except Internet Publishers) | 511140 | Directory and Mailing List Publishers |
| | Internet Database and Directory Publishers | 516110 | Internet Publishers (pt.) |
| 511191 | Greeting Card Publishers | | |
| | Greeting Card Publishers (except Internet Publishers) | 511191 | Greeting Card Publishers |
| | Internet Greeting Card Publishers | 516110 | Internet Publishers (pt.) |
| 511199 | All Other Publishers | | |
| | All Other Publishers (except Internet Publishers) | 511199 | All Other Publishers |
| | All Other Internet Publishers | 516110 | Internet Publishers (pt.) |
| 511210 | Software Publishers | 511210 | Software Publishers |
| 512110 | Motion Picture and Video Production | 512110 | Motion Picture and Video Production |
| 512120 | Motion Picture and Video Distribution | 512120 | Motion Picture and Video Distribution |
| 512131 | Motion Picture Theaters (except Drive-Ins) | 512131 | Motion Picture Theaters (except Drive-Ins) |
| 512132 | Drive-In Motion Picture Theaters | 512132 | Drive-In Motion Picture Theaters |

| | | | |
|---|---|---|---|
| 512191 | Teleproduction and Other Postproduction Services | 512191 | Teleproduction and other Postproduction Services |
| 512199 | Other Motion Picture and Video Industries | 512199 | Other Motion Picture and Video Industries |
| 512210 | Record Production | 512210 | Record Production |
| 512220 | Integrated Record Production/Distribution | 512220 | Integrated Record Production/Distribution |
| 512230 | Music Publishers | 512230 | Music Publishers |
| 512240 | Sound Recording Studios | 512240 | Sound Recording Studios |
| 512290 | Other Sound Recording Industries | 512290 | Other Sound Recording Industries |
| 513111 | Radio Networks | 515111 | Radio Networks |
| 513112 | Radio Stations | 515112 | Radio Stations |
| 513120 | Television Broadcasting | 515120 | Television Broadcasting |
| 513210 | Cable Networks | 515210 | Cable and Other Subscription Programming |
| 513220 | Cable and Other Program Distribution | 517510 | Cable and Other Program Distribution |
| 513310 | Wired Telecommunications Carriers | 517110 | Wired Telecommunications Carriers |
| 513321 | Paging | 517211 | Paging |
| 513322 | Cellular and Other Wireless Telecommunications | 517212 | Cellular and Other Wireless Telecommunications |
| 513330 | Telecommunications Resellers | 517310 | Telecommunications Resellers |
| 513340 | Satellite Telecommunications | 517410 | Satellite Telecommunications |
| 513390 | Other Telecommunications | 517910 | Other Telecommunications |
| 514110 | News Syndicates | 519110 | News Syndicates |
| 514120 | Libraries and Archives | 519120 | Libraries and Archives |
| 514191 | On-Line Information Services | 518111 | Internet Service Providers |
| 514199 | All Other Information Services | | |
| | Internet Broadcasting | 516110 | Internet Publishing and Broadcasting (pt.) |
| | Web Search Portals | 518112 | Web Search Portals |
| | All Other Information Services | 519190 | All Other Information Services |
| 514210 | Data Processing Services | 518210 | Data Processing, Hosting, and Related Services |
| 561720 | Janitorial Services | | |
| | Cleaning Buildings During and Immediately After Construction | 238990 | All Other Specialty Trade Contractors (pt) |
| | Except Cleaning Building During and Immediately After Construction | 561720 | Janitorial Services |

## Table 3 - 2002 NAICS United States Matched to 1987 Standard Industrial Classification

| 2002 NAICS Code | 2002 NAICS Description | | 1987 SIC Code | 1987 SIC and Description |
|---|---|---|---|---|
| 236 | Construction of Buildings | | | |
| 2361 | Residential Building Construction | | | |
| 23611 | Residential Building Construction | | | |
| 236115 | New Single-Family Housing Construction (except Operative Builders) | | | |
| | Single-family housing general contractors | * | 1521 | General Contractors - Single-Family Houses (except remodeling contractors) |
| | Single-family housing construction management | * | 8741 | Management Services (single-family housing construction management) |
| 236116 | New Multifamily Housing Construction (except Operative Builders) | | | |
| | Multifamily housing general contractors | * | 1522 | General Contractors - Residential Buildings Other Than Single-Family (except remodeling contractors, hotel and motel construction contractors, and dormitory and barrack construction contractors) |
| | Multifamily housing construction management | * | 8741 | Management Services (multifamily housing construction management) |
| 236117 | New Housing Operative Builders | * | 1531 | Operative Builders (residential operative builders) |
| 236118 | Residential Remodelers | | | |
| | Single-family housing remodeling contractors | * | 1521 | General Contractors - Single-Family Houses (remodeling contractors) |
| | Multifamily housing remodeling contractors | * | 1522 | General Contractors - Residential Buildings Other Than Single-Family (remodeling contractors) |
| | Operative residential remodelers | * | 1531 | Operative Builders (residential operative remodelers) |
| | Construction management for residential remodeling projects | * | 8741 | Management Services (residential remodeling construction management) |
| 2362 | Nonresidential Building Construction | | | |
| 23621 | Industrial Building Construction | | | |
| | Operative builders of industrial buildings | * | 1531 | Operative Builders (Operative builders of industrial and manufacturing buildings except grain elevators, dry cleaning plants, and manufacturing and industrial warehouses) |
| | Industrial building general contractors | * | 1541 | General Contractors Industrial Buildings and Warehouses ( except grain elevators; drycleaning plants; and manufacturing, public, and industrial warehouses) |
| | Industrial nonbuilding structures (except petrochemical plants and refineries) | * | 1629 | Heavy Construction, NEC (Industrial nonbuilding structures [except petrochemical plants and petroleum refineries]) |
| | Industrial building construction management | * | 8741 | Management Services (industrial building and nonbuilding structure construction management) |
| 23622 | Commercial and Institutional Building Construction | | | |
| | Hotel, motel, dormitory and barrack general contractors | * | 1522 | General Contractors - Residential Buildings Other Than Single-Family (dormitory, barrack, hotel, and motel construction contractors) |
| | Operative builders of commercial and institutional buildings | * | 1531 | Operative Builders (grain elevator, dry cleaning plant, and manufacturing and industrial warehouse operative builders) |
| | Grain elevator; dry cleaning plant; and public, industrial, and public warehouse general contractors | * | 1541 | General Contractors - Industrial Buildings and Warehouses (general contractors of grain elevators; dry cleaning plants; and manufacturing, industrial, and public warehouses) |
| | Nonresidential buildings, other than industrial buildings and warehouses general contractors | | 1542 | General Contractors - Nonresidential Buildings, Other than Industrial Buildings and Warehouses |
| | Indoor swimming pool construction | * | 1799 | Special Trade Contractors, NEC (indoor swimming pool construction contractors) |
| | Commercial and institutional building construction management | * | 8741 | Management Services (Commercial and Institutional building construction management) |
| 237 | Heavy and Civil Engineering Construction | | | |
| 2371 | Utility System Construction | | | |
| 23711 | Water and Sewer Line and Related Structures Construction | | | |
| | Water and sewer pipelines and related line construction | * | 1623 | Water, Sewer, Pipeline, and Communications and Power Line Construction (water and sewer pipelines and related construction) |
| | Water and sewage treatment plants and related structures | * | 1629 | Heavy Construction NEC (irrigation systems, sewage treatment plants, and water treatment plants) |
| | Water well drilling | | 1781 | Water Well Drilling |
| | Construction management for water and sewer lines and related structures | * | 8741 | Management Services (construction management of water, sewer, and related structure construction projects) |
| 23712 | Oil and Gas Pipeline and Related Structures Construction | | | |
| | Construction of oil and gas field gathering lines on a contract basis | * | 1389 | Oil and Gas Field Services, NEC (construction of field gathering lines on a contract or fee basis) |
| | Oil and gas pipelines, mains, pumping stations, and storage tanks | * | 1623 | Water, Sewer, Pipeline, and Communications and Power Line Construction (gas and oil pipelines, mains, and pumping stations) |

| | | | | |
|---|---|---|---|---|
| | Petrochemical plants and refineries | * | 1629 | Heavy Construction, NEC (petrochemical plants and refineries) |
| | Oil and gas pipeline and related structure construction management | * | 8741 | Management Services (construction management of oil and gas pipelines and related structure construction projects) |
| 23713 | Power and Communication Line and Related Structures Construction | | | |
| | Power and communication line construction | * | 1623 | Water, Sewer, Pipeline, and Communications and Power Line Construction (power and communications transmission lines) |
| | Transmission stations, distribution stations, and related structures | * | 1629 | Heavy Construction, NEC (power generation plants [except hydroelectric dams], transmission stations, and distribution stations) |
| | Power and communication line and related structure construction management | * | 8741 | Management Services (construction management of power generation [except hydroelectric] facilities, and transmission and distribution station construction projects) |
| 2372 | Land Subdivision | | | |
| 23721 | Land Subdivision | | 6552 | Land Subdividers and Developers, Except Cemeteries |
| 2373 | Highway, Street, and Bridge Construction | | | |
| 23731 | Highway, Street, and Bridge Construction | | | |
| | Highway and street construction | | 1611 | Highway and Street Construction |
| | Bridge and elevated highway construction | * | 1622 | Bridge, Tunnel, and Elevated Highway Construction (bridge and elevated highway construction) |
| | Traffic lane painting | * | 1721 | Painting and Paper Hanging (traffic lane painting) |
| | Highway, street, and bridge construction management | * | 8741 | Management Services (highway, street, and bridge construction management) |
| 2379 | Other Heavy and Civil Engineering Construction | | | |
| 23799 | Other Heavy and Civil Engineering Construction | | | |
| | Tunnel construction | * | 1622 | Bridge, Tunnel, and Elevated Highway Construction (tunnel construction) |
| | Transit, rail, port, dam, flood control, and other heavy and civil engineering construction | * | 1629 | Heavy Construction, NEC (except industrial nonbuilding structures, irrigation systems, sewage and water treatment plants, petrochemical plants and refineries, power generation plants [except hydroelectric dams] transmission and distribution stations, right-of-way clearing, line slashing, blasting, and trenching) |
| | Anchored earth retention wall construction contractors | * | 1799 | Special Trade Contractors, NEC (anchored earth retention contractors) |
| | Other heavy and civil engineering construction management | * | 8741 | Management Services (construction management for other heavy and civil engineering construction) |
| 238 | Specialty Trade Contractors | | | |
| 2381 | Foundation, Structure, and Building Exterior Contractors | | | |
| 23811 | Poured Concrete Foundation and Structure Contractors | * | 1771 | Concrete Work (except stucco work; and residential and commercial asphalt, brick, and paving) |
| 23812 | Structural Steel and Precast Concrete Contractors | * | 1791 | Structural Steel Erection (except curtain wall installation, metal furring installation, and cooling tower installation) |
| 23813 | Framing Contractors | * | 1751 | Carpentry Work (framing carpentry) |
| 23814 | Masonry Contractors | | | |
| | Masonry, stone setting, and other stone work | | 1741 | Masonry, Stone Setting, and Other Stone Work |
| | Stucco work | * | 1771 | Concrete Work (stucco work) |
| 23815 | Glass and Glazing Contractors | | | |
| | Glass and glazing work | | 1793 | Glass and Glazing Work |
| | Glass tinting work | * | 1799 | Special Trade Contractors, NEC (glass tinting work) |
| 23816 | Roofing Contractors | * | 1761 | Roofing, Siding, and Sheet Metal Work (roofing contractors) |
| 23817 | Siding Contractors | * | 1761 | Roofing, Siding, and Sheet Metal Work (siding contractors) |
| 23819 | Other Foundation, Structure, and Building Exterior Contractors | | | |
| | Curtain wall and metal furring installation | * | 1791 | Structural Steel Erection (curtain wall installation and metal furring installation) |
| | Forming and ornamental metal work contractors | * | 1799 | Special Trade Contractors, NEC (forming contractors and ornamental metal work contractors) |
| 2382 | Building Equipment Contractors | | | |
| 23821 | Electrical Contractors | | | |
| | Environmental control installation contractors | * | 1711 | Plumbing, Heating, and Air-Conditioning (environmental control installation contractors) |
| | Electrical contractors | * | 1731 | Electrical Work (except burglar and fire alarm installation) |
| 23822 | Plumbing, Heating, and Air-Conditioning Contractors | | | |
| | Plumbing, heating, and air-conditioning contractors | * | 1711 | Plumbing, Heating, and Air-Conditioning (except environmental controls installation; and septic tank, cesspool, and dry well construction) |
| | Cooling tower installation contractors | * | 1791 | Structural Steel Erection (cooling tower installation) |

| | | | | |
|---|---|---|---|---|
| | Scrubber, dust collection, and other industrial ventilation equipment installation contractors | * | 1796 | Installation or Erection of Building Equipment, NEC (scrubber, dust collection, and other industrial ventilation installation) |
| | Boiler chipping, scaling, and cleaning | * | 7699 | Repair Shops and Related Services, NEC (boiler cleaning, chipping, and scaling) |
| 23829 | Other Building Equipment Contractors | | | |
| | Elevator, escalator, and other building equipment installation | * | 1796 | Installation or Erection of Building Equipment, NEC (except scrubber, dust collection, and other industrial ventilation installation) |
| | Installation of service station equipment, bowling alley equipment, church bells, clock towers, and similar equipment; and insulation of boilers, pipes, and ducts | * | 1799 | Special Trade Contractors, NEC (building equipment installation contractors for service station equipment; boiler, duct, and pipe insulation; lightning rod installation; bowling alley equipment installation; church bell installation; and clock tower installation) |
| | Household antenna installation | * | 7622 | Radio and Television Repair Shops (household antenna installation) |
| 2383 | Building Finishing Contractors | | | |
| 23831 | Drywall and Insulation Contractors | | | |
| | Plastering, drywall, acoustical, and insulation contractors | | 1742 | Plastering, Drywall, Acoustical, and Insulation Work |
| | Fresco work | * | 1743 | Terrazzo, Tile, Marble, and Mosaic Work (fresco work) |
| 23832 | Paint and Wall Covering Contractors | | | |
| | Paint and wall covering contractors | * | 1721 | Painting and Paper Hanging (except traffic lane painting) |
| | Paint and wall covering removal contractors | * | 1799 | Special Trade Contractors, NEC (paint and wallpaper stripping and removing contractors) |
| 23833 | Flooring Contractors | | 1752 | Floor Laying and Other Floor Work, NEC |
| 23834 | Tile and Terrazzo Contractors | * | 1743 | Terrazzo, Tile, Marble, and Mosaic Work (except fresco work) |
| 23835 | Finish Carpentry Contractors | * | 1751 | Carpentry Work (finish carpentry) |
| 23839 | Other Building Finishing Contractors | | | |
| | Sheet metal work (except roofing and siding) | * | 1761 | Roofing, Siding, and Sheet Metal Work (except roofing and siding work) |
| | Weather stripping and damp proofing, modular furniture installation, bathtub refinishing, window covering fixture installation, exhibit installation and removal, and spectator seating installation | * | 1799 | Special Trade Contractors, NEC (building finishing contractors for weather stripping and damp proofing, modular furniture installation, bathtub refinishing, window covering fixture installation, trade show exhibit installation and dismantling, and spectator seating installation) |
| 2389 | Other Specialty Trade Contractors | | | |
| 23891 | Site Preparation Contractors | | | |
| | Site preparation and related activities at metal ore mines | * | 1081 | Metal Mining Services (site preparation and related construction activities on a contract basis) |
| | Site preparation and related activities at coal mines | * | 1241 | Coal Mining Services (site preparation and related construction activities on a contract basis) |
| | Site preparation and related activities at oil and gas fields | * | 1389 | Oil and Gas Field Services, NEC (site preparation and related construction activities on a contract basis) |
| | Site preparation and related activities at nonmetallic mineral mines | * | 1481 | Nonmetallic Minerals Services, Except Fuels (site preparation and related construction activities on a contract basis) |
| | Right-of-way clearing, line slashing, blasting, and trenching | * | 1629 | Heavy Construction, NEC (right-of-way clearing and line slashing, blasting, and trenching) |
| | Septic tank, cesspool, and dry well contractors | * | 1711 | Plumbing, Heating, and Air-Conditioning (septic tank, cesspool, and dry well construction contractors) |
| | Excavation contractors | | 1794 | Excavation Work |
| | Wrecking and demolition contractors | | 1795 | Wrecking and Demolition Work |
| | Dewatering contractors, test boring for construction, and core drilling for construction | * | 1799 | Special Trade Contractors, NEC (dewatering contractors, test drilling for construction, and core drilling for construction) |
| | Rental of construction equipment (except cranes) with operator | * | 7353 | Construction Equipment Rental and Leasing (rental of construction equipment [except cranes] with operator) |
| 23899 | All Other Specialty Trade Contractors | | | |
| | Residential and commercial concrete and asphalt paving | * | 1771 | Concrete Work (residential and commercial asphalt, brick, and concrete paving) |
| | Special trade contractors not specified elsewhere | * | 1799 | Special Trade Contractors, NEC (except indoor swimming pool contractors, anchored earth retention contractors, glass tinting work, forming contractors, ornamental metal work contractors, service station equipment installation, pipe and duct insulation contractors, lightning rod installation contractors, bowling alley equipment installation, church bell installation, clock tower installation, paint and wall paper removal contractors, miscellaneous building finishing contractors, dewatering contractors, test drilling for construction, and core drilling for construction) |
| | Crane rental with operator | * | 7353 | Construction Equipment Rental and Leasing (crane rental with operator) |
| 42 | Wholesale Trade | | | |
| 423 | Merchant Wholesalers, Durable Goods | | | |

| | | | | |
|---|---|---|---|---|
| 4231 | Motor Vehicle and Motor Vehicle Parts and Supplies Merchant Wholesalers | | | |
| 42311 | Automobile and Other Motor Vehicle Merchant Wholesalers | * | 5012 | Automobiles and Other Motor Vehicles (merchant wholesalers) |
| 42312 | Motor Vehicle Supplies and New Parts Merchant Wholesalers | * | 5013 | Motor Vehicle Supplies and New Parts (merchant wholesalers except selling via retail method) |
| 42313 | Tire and Tube Merchant Wholesalers | * | 5014 | Tires and Tubes (merchant wholesalers except selling via retail method) |
| 42314 | Motor Vehicle Parts (Used) Merchant Wholesalers | * | 5015 | Motor Vehicle Parts, Used (merchant wholesalers except selling via retail method) |
| 4232 | Furniture and Home Furnishing Merchant Wholesalers | | | |
| 42321 | Furniture Merchant Wholesalers | * | 5021 | Furniture (merchant wholesalers except selling via retail method) |
| 42322 | Home Furnishing Merchant Wholesalers | * | 5023 | Homefurnishings (merchant wholesalers except selling via retail method) |
| 4233 | Lumber and Other Construction Materials Merchant Wholesalers | | | |
| 42331 | Lumber, Plywood, Millwork, and Wood Panel Merchant Wholesalers | | | |
| | Lumber, plywood, millwork, and wood panels | * | 5031 | Lumber, Plywood, Millwork, and Wood Panels (merchant wholesalers except selling via retail method) |
| | Nonwood prefabricated buildings and structural assemblies | * | 5039 | Construction Materials, NEC (prefabricated buildings and structural assemblies, nonwood, merchant wholesalers) |
| 42332 | Brick, Stone, and Related Construction Material Merchant Wholesalers | * | 5032 | Brick, Stone, and Related Construction Materials (merchant wholesalers except selling via retail method) |
| 42333 | Roofing, Siding, and Insulation Material Merchant Wholesalers | * | 5033 | Roofing, Siding, and Insulation Materials (merchant wholesalers except selling via retail method) |
| 42339 | Other Construction Material Merchant Wholesalers | * | 5039 | Construction Materials, NEC (merchant wholesalers of construction materials, nec except selling via retail method) |
| 4234 | Professional and Commercial Equipment and Supplies Merchant Wholesalers | | | |
| 42341 | Photographic Equipment and Supplies Merchant Wholesalers | * | 5043 | Photographic Equipment and Supplies (merchant wholesalers) |
| 42342 | Office Equipment Merchant Wholesalers | * | 5044 | Office Equipment (merchant wholesalers except selling via retail method) |
| 42343 | Computer and Computer Peripheral Equipment and Software Merchant Wholesalers | * | 5045 | Computers and Computer Peripheral Equipment and Software (merchant wholesalers except selling via retail method) |
| 42344 | Other Commercial Equipment Merchant Wholesalers | * | 5046 | Commercial Equipment, NEC (merchant wholesalers) |
| 42345 | Medical, Dental, and Hospital Equipment and Supplies Merchant Wholesalers | * | 5047 | Medical, Dental, and Hospital Equipment and Supplies (merchant wholesalers except selling via retail method) |
| 42346 | Ophthalmic Goods Merchant Wholesalers | * | 5048 | Ophthalmic Goods (merchant wholesalers) |
| 42349 | Other Professional Equipment and Supplies Merchant Wholesalers | * | 5049 | Professional Equipment and Supplies, NEC (merchant wholesalers except selling via retail method) |
| 4235 | Metal and Mineral (except Petroleum) Merchant Wholesalers | | | |
| 42351 | Metal Service Centers and Other Metal Merchant Wholesalers | * | 5051 | Metals Service Centers and Offices (merchant wholesalers) |
| 42352 | Coal and Other Mineral and Ore Merchant Wholesalers | * | 5052 | Coal and Other Minerals and Ores (merchant wholesalers) |
| 4236 | Electrical and Electronic Goods Merchant Wholesalers | | | |
| 42361 | Electrical Apparatus and Equipment, Wiring Supplies, and Related Equipment Merchant Wholesalers | * | 5063 | Electrical Apparatus and Equipment, Wiring Supplies, and Construction Materials (merchant wholesalers except selling via retail method) |
| 42362 | Electrical and Electronic Appliance, Television, and Radio Set Merchant Wholesalers | * | 5064 | Electrical Appliances, Television and Radio Sets (merchant wholesalers except selling via retail method) |
| 42369 | Other Electronic Parts and Equipment Merchant Wholesalers | * | 5065 | Electronic Parts and Equipment, NEC (merchant wholesalers except selling via retail method) |
| 4237 | Hardware, and Plumbing and Heating Equipment and Supplies Merchant Wholesalers | | | |
| 42371 | Hardware Merchant Wholesalers | * | 5072 | Hardware (merchant wholesalers except selling via retail method) |
| 42372 | Plumbing and Heating Equipment and Supplies (Hydronics) Merchant Wholesalers | * | 5074 | Plumbing and Heating Equipment and Supplies (Hydronics) (merchant wholesalers except selling via retail method) |

| | | | | |
|---|---|---|---|---|
| 42373 | Warm Air Heating and Air-Conditioning Equipment and Supplies Merchant Wholesalers | * | 5075 | Warm Air Heating and Air-Conditioning Equipment and Supplies (merchant wholesalers) |
| 42374 | Refrigeration Equipment and Supplies Merchant Wholesalers | * | 5078 | Refrigeration Equipment and Supplies (merchant wholesalers) |
| 4238 | Machinery, Equipment, and Supplies Merchant Wholesalers | | | |
| 42381 | Construction and Mining (except Oil Well) Machinery and Equipment Merchant Wholesalers | * | 5082 | Construction and Mining (Except Petroleum) Machinery and Equipment (merchant wholesalers) |
| 42382 | Farm and Garden Machinery and Equipment Merchant Wholesalers | * | 5083 | Farm and Garden Machinery and Equipment (merchant wholesalers except lawn and garden equipment sold via retail method) |
| 42383 | Industrial Machinery and Equipment Merchant Wholesalers | | | |
| | Industrial machinery and equipment | * | 5084 | Industrial Machinery and Equipment (merchant wholesalers) |
| | Fluid power accessories | * | 5085 | Industrial Supplies (fluid power accessories merchant wholesalers) |
| 42384 | Industrial Supplies Merchant Wholesalers | * | 5085 | Industrial Supplies (merchant wholesalers - except selling via retail method and merchant wholesalers of fluid power accessories) |
| 42385 | Service Establishment Equipment and Supplies Merchant Wholesalers | * | 5087 | Service Establishment Equipment and Supplies (merchant wholesalers, except merchant wholesalers selling beauty and barbershop equipment and supplies via retail method) |
| 42386 | Transportation Equipment and Supplies (except Motor Vehicle) Merchant Wholesalers | * | 5088 | Transportation Equipment and Supplies, Except Motor Vehicles (merchant wholesalers) |
| 4239 | Miscellaneous Durable Goods Merchant Wholesalers | | | |
| 42391 | Sporting and Recreational Goods and Supplies Merchant Wholesalers | | | |
| | Sporting and recreational goods and supplies merchant wholesalers | * | 5091 | Sporting and Recreational Goods and Supplies (merchant wholesalers except selling via retail method) |
| | Men's and boy's athletic uniforms | * | 5136 | Men's and Boy's Clothing and Furnishing (athletic uniform merchant wholesalers except selling via retail method) |
| | Other athletic uniforms | * | 5137 | Women's, Children's, and Infant's Clothing and Accessories (other athletic uniform merchant wholesalers except selling via retail method) |
| 42392 | Toy and Hobby Goods and Supplies Merchant Wholesalers | * | 5092 | Toys and Hobby Goods and Supplies (merchant wholesalers except selling via retail method) |
| 42393 | Recyclable Material Merchant Wholesalers | * | 5093 | Scrap and Waste Materials (merchant wholesalers) |
| 42394 | Jewelry, Watch, Precious Stone, and Precious Metal Merchant Wholesalers | * | 5094 | Jewelry, Watches, Precious Stones, and Precious Metals (merchant wholesalers except selling via retail method) |
| 42399 | Other Miscellaneous Durable Goods Merchant Wholesalers | | | |
| | Durable goods, nec merchant wholesalers | * | 5099 | Durable Goods, NEC (merchant wholesalers except selling via retail method) |
| | Prerecorded video tape merchant wholesalers | * | 7822 | Motion Picture and Video Tape Distribution (merchant wholesalers) |
| 424 | Merchant Wholesalers, Nondurable Goods | | | |
| 4241 | Paper and Paper Product Merchant Wholesalers | | | |
| 42411 | Printing and Writing Paper Merchant Wholesalers | * | 5111 | Printing and Writing Paper (merchant wholesalers except selling via retail method) |
| 42412 | Stationary and Office Supplies Merchant Wholesalers | * | 5112 | Stationary and Office Supplies (merchant wholesalers except selling via retail method) |
| 42413 | Industrial and Personal Service Paper Merchant Wholesalers | * | 5113 | Industrial and Personal Service Paper (merchant wholesalers except selling via retail method) |
| 4242 | Drugs and Druggists' Sundries Merchant Wholesalers | | | |
| 42421 | Drugs and Druggists' Sundries Merchant Wholesalers | * | 5122 | Drugs, Drug Proprietaries, and Druggists' Sundries (merchant wholesalers except selling via retail method) |
| 4243 | Apparel, Piece Goods, and Notions Merchant Wholesalers | | | |
| 42431 | Piece Goods, Notions, and Other Dry Goods Merchant Wholesalers | * | 5131 | Piece Goods, Notions, and Other Dry Goods (merchant wholesalers- except selling via retail method and piece goods converters) |
| 42432 | Men's and Boys' Clothing and Furnishings Merchant Wholesalers | * | 5136 | Men's and Boys' Clothing and Furnishings (merchant wholesalers [except athletic uniforms and merchant wholesalers selling via retail method] ) |
| 42433 | Women's, Children's, and Infants' Clothing and Accessories Merchant Wholesalers | * | 5137 | Women's, Children's, and Infants' Clothing and Accessories (merchant wholesalers [except athletic uniforms and merchant wholesalers selling via retail method] ) |
| 42434 | Footwear Merchant Wholesalers | | | |
| | Footwear merchant wholesalers | * | 5139 | Footwear (merchant wholesalers except selling via retail method) |

| | | | | |
|---|---|---|---|---|
| | Footwear cut stock merchant wholesalers | * | 5199 | Nondurable Goods, NEC (footwear cut stock merchant wholesalers) |
| 4244 | Grocery and Related Product Merchant Wholesalers | | | |
| 42441 | General Line Grocery Merchant Wholesalers | * | 5141 | Groceries, General Line (merchant wholesalers except selling via retail method) |
| 42442 | Packaged Frozen Food Merchant Wholesalers | * | 5142 | Packaged Frozen Foods (merchant wholesalers except selling via retail method) |
| 42443 | Dairy Product (except Dried or Canned) Merchant Wholesalers | * | 5143 | Dairy Products, Except Dried or Canned (merchant wholesalers except selling via retail method) |
| 42444 | Poultry and Poultry Product Merchant Wholesalers | * | 5144 | Poultry and Poultry Products (merchant wholesalers except selling via retail method) |
| 42445 | Confectionery Merchant Wholesalers | * | 5145 | Confectionery (merchant wholesalers except selling via retail method) |
| 42446 | Fish and Seafood Merchant Wholesalers | * | 5146 | Fish and Seafoods (merchant wholesalers except selling via retail method) |
| 42447 | Meat and Meat Product Merchant Wholesalers | * | 5147 | Meats and Meat Products (merchant wholesalers [except boxed beef manufacturers and merchant wholesalers selling via retail method] ) |
| 42448 | Fresh Fruit and Vegetable Merchant Wholesalers | * | 5148 | Fresh Fruits and Vegetables (merchant wholesalers except selling via retail method) |
| 42449 | Other Grocery and Related Products Merchant Wholesalers | * | 5149 | Groceries and Related Products, NEC (merchant wholesalers [except bottled water manufacturers and merchant wholesalers selling via retail method) |
| 4245 | Farm Product Raw Material Merchant Wholesalers | | | |
| 42451 | Grain and Field Bean Merchant Wholesalers | * | 5153 | Grain and Field Beans (merchant wholesalers except selling via retail method) |
| 42452 | Livestock Merchant Wholesalers | * | 5154 | Livestock (merchant wholesalers) |
| 42459 | Other Farm Product Raw Material Merchant Wholesalers | * | 5159 | Farm-Product Raw Materials, NEC (merchant wholesalers except selling via retail method) |
| 4246 | Chemical and Allied Products Merchant Wholesalers | | | |
| 42461 | Plastics Materials and Basic Forms and Shapes Merchant Wholesalers | | | |
| | Plastics materials and basic forms and shapes merchant wholesalers | * | 5162 | Plastics materials and Basic Forms and Shapes (merchant wholesalers except selling via retail method) |
| | Plastics foam merchant wholesalers | * | 5199 | Nondurable Goods, NEC (plastics foam merchant wholesalers) |
| 42469 | Other Chemical and Allied Products Merchant Wholesalers | * | 5169 | Chemicals and Allied Products, NEC (merchant wholesalers) |
| 4247 | Petroleum and Petroleum Products Merchant Wholesalers | | | |
| 42471 | Petroleum Bulk Stations and Terminals | * | 5171 | Petroleum Bulk Stations and Terminals (except petroleum sold via retail method) |
| 42472 | Petroleum and Petroleum Products Merchant Wholesalers (except Bulk Stations and Terminals) | * | 5172 | Petroleum and Petroleum Products Wholesalers, Except Bulk Stations and Terminals (merchant wholesalers) |
| 4248 | Beer, Wine, and Distilled Alcoholic Beverage Merchant Wholesalers | | | |
| 42481 | Beer and Ale Merchant Wholesalers | * | 5181 | Beer and Ale (merchant wholesalers except selling via retail method) |
| 42482 | Wine and Distilled Alcoholic Beverage Merchant Wholesalers | * | 5182 | Wine and Distilled Alcoholic Beverages (merchant wholesalers except selling via retail method) |
| 4249 | Miscellaneous Nondurable Goods Merchant Wholesalers | | | |
| 42491 | Farm Supplies Merchant Wholesalers | * | 5191 | Farm Supplies (merchant wholesalers except selling lawn and garden supplies via retail method) |
| 42492 | Book, Periodical, and Newspaper Merchant Wholesalers | * | 5192 | Books, Periodicals, and Newspapers (merchant wholesalers except selling via retail method) |
| 42493 | Flower, Nursery Stock, and Florists' Supplies Merchant Wholesalers | * | 5193 | Flowers, Nursery Stock, and Florists' Supplies (merchant wholesalers except selling via retail method) |
| 42494 | Tobacco and Tobacco Product Merchant Wholesalers | * | 5194 | Tobacco and Tobacco Products (merchant wholesalers except selling via retail method) |
| 42495 | Paint, Varnish, and Supplies Merchant Wholesalers | * | 5195 | Paints, Varnishes, and Supplies (merchant wholesalers) |
| 42499 | Other Miscellaneous Nondurable Goods Merchant Wholesalers | * | 5199 | Nondurable Goods, NEC (merchant wholesalers [except advertising specialties goods distributors, footwear cutstock, plastics foam, and merchant wholesalers selling nondurable goods, nec via retail method) |

425 Wholesale Electronic Markets and Agents and Brokers
4251 Wholesale Electronic Markets and Agents and Brokers
42511 Business to Business Electronic Markets

| | | |
|---|---|---|
| Motor vehicle business to business electronic markets | * | 5012 Automobiles and Other Motor Vehicles (business to business electronic markets) |
| Motor vehicle parts and supplies business to business electronic markets | * | 5013 Motor Vehicle Supplies and New Parts (business to business electronic markets) |
| Tire and tube business to business electronic markets | * | 5014 Tires and Tubes (business to business electronic markets) |
| Used motor vehicle parts business to business electronic markets | * | 5015 Motor Vehicle Parts, Used (business to business electronic markets) |
| Furniture business to business electronic markets | * | 5021 Furniture (business to business electronic markets) |
| Homefurnishings business to business electronic markets | * | 5023 Homefurnishings (business to business electronic markets) |
| Lumber, plywood, and panel business to business electronic markets | * | 5031 Lumber, Plywood, Millwork, and Wood Panels (business to business electronic markets) |
| Brick, stone, and related products business to business electronic markets | * | 5032 Brick, Stone, and Related Construction Materials (business to business electronic markets) |
| Roofing, siding and insulation business to business electronic markets | * | 5033 Roofing, Siding, and Insulation Materials (business to business electronic markets) |
| Construction materials, nec business to business electronic markets | * | 5039 Construction Materials, NEC (business to business electronic markets) |
| Photographic equipment and supplies business to business electronic markets | * | 5043 Photographic Equipment and Supplies (business to business electronic markets) |
| Office equipment business to business electronic markets | * | 5044 Office Equipment (business to business electronic markets) |
| Computers and related equipment business to business electronic markets | * | 5045 Computers and Computer Peripheral Equipment and Software (business to business electronic markets) |
| Commercial equipment, nec business to business electronic markets | * | 5046 Commercial Equipment, NEC (business to business electronic markets) |
| Medical, dental, and hospital equipment and supplies business to business electronic markets | * | 5047 Medical, Dental, and Hospital Equipment and Supplies (business to business electronic markets) |
| Ophthalmic goods business to business electronic markets | * | 5048 Ophthalmic Goods (business to business electronic markets) |
| Professional equipment and supplies business to business electronic markets | * | 5049 Professional Equipment and Supplies, NEC (business to business electronic markets) |
| Metals business to business electronic markets | * | 5051 Metals Service Centers and Offices (business to business electronic markets) |
| Coal and other mineral and ore business to business electronic markets | * | 5052 Coal and Other Minerals and Ores (business to business electronic markets) |
| Electrical apparatus and equipment and wiring supplies business to business electronic markets | * | 5063 Electrical Apparatus and Equipment, Wiring Supplies, and Construction Materials (business to business electronic markets) |
| Electrical appliance business to business electronic markets | * | 5064 Electrical Appliances, Television and Radio Sets (business to business electronic markets) |
| Electronic parts business to business electronic markets | * | 5065 Electronic Parts and Equipment, NEC (business to business electronic markets) |
| Hardware business to business electronic markets | * | 5072 Hardware (business to business electronic markets) |
| Plumbing and hot water heating equipment business to business electronic markets | * | 5074 Plumbing and Heating Equipment and Supplies (Hydronics) (business to business electronic markets) |
| Warm air heating and air-conditioning equipment business to business electronic markets | * | 5075 Warm Air Heating and Air-Conditioning Equipment and Supplies (business to business electronic markets) |
| Refrigeration equipment and supplies business to business electronic markets | * | 5078 Refrigeration Equipment and Supplies (business to business electronic markets) |
| Construction and mining equipment business to business electronic markets | * | 5082 Construction and Mining (Except Petroleum) Machinery and Equipment (business to business electronic markets) |
| Farm and garden machinery business to business electronic markets | * | 5083 Farm and Garden Machinery and Equipment (business to business electronic markets) |
| Industrial machinery and equipment business to business electronic markets | * | 5084 Industrial Machinery and Equipment (business to business electronic markets) |
| Industrial supplies business to business electronic markets | * | 5085 Industrial Supplies (business to business electronic markets) |
| Service industry equipment and supplies business to business electronic markets | * | 5087 Service Establishment Equipment and Supplies (business to business electronic markets) |
| Transportation equipment and supplies, except motor vehicle, business to business electronic markets | * | 5088 Transportation Equipment and Supplies, Except Motor Vehicles (business to business electronic markets) |
| Sporting goods business to business electronic markets | * | 5091 Sporting and Recreational Goods and Supplies (business to business electronic markets) |
| Toys and hobby supply business to business electronic markets | * | 5092 Toys and Hobby Goods and Supplies (business to business electronic markets) |
| Scrap and waste material business to business electronic markets | * | 5093 Scrap and Waste Materials (business to business electronic markets) |
| Jewelry, watches, and related goods business to business electronic markets | * | 5094 Jewelry, Watches, Precious Stones, and Precious Metals (business to business electronic markets) |
| Durable goods, nec business to business electronic markets | * | 5099 Durable Goods, NEC (business to business electronic markets) |
| Printing and writing paper business to business electronic markets | * | 5111 Printing and Writing Paper (business to business electronic markets) |
| Stationary and office supplies business to business electronic markets | * | 5112 Stationary and Office Supplies (business to business electronic markets) |
| Other paper business to business electronic markets | * | 5113 Industrial and Personal Service Paper (business to business electronic markets) |
| Drugs and related products business to business electronic markets | * | 5122 Drugs, Drug Proprietaries, and Druggists' Sundries (business to business electronic markets) |
| Dry goods business to business electronic markets | * | 5131 Piece Goods, Notions, and Other Dry Goods (business to business electronic markets) |

| | | | | |
|---|---|---|---|---|
| | Men's and boys' clothing business to business electronic markets | * | 5136 | Men's and Boy's Clothing and Furnishing (business to business electronic markets) |
| | Women's and children's business to business electronic markets | * | 5137 | Women's, Children's, and Infant's Clothing and Accessories (business to business electronic markets) |
| | Footwear business to business electronic markets | * | 5139 | Footwear (business to business electronic markets) |
| | General line grocery business to business electronic markets | * | 5141 | Groceries, General Line (business to business electronic markets) |
| | Frozen food business to business electronic markets | * | 5142 | Packaged Frozen Foods (business to business electronic markets) |
| | Dairy product business to business electronic markets | * | 5143 | Dairy Products, Except Dried or Canned (business to business electronic markets) |
| | Poultry and poultry product business to business electronic markets | * | 5144 | Poultry and Poultry Products (business to business electronic markets) |
| | Confectionery business to business electronic markets | * | 5145 | Confectionery (business to business electronic markets) |
| | Fish and seafood business to business electronic markets | * | 5146 | Fish and Seafoods (business to business electronic markets) |
| | Meat and meat product business to business electronic markets | * | 5147 | Meats and Meat Products (business to business electronic markets) |
| | Fresh fruit and vegetable business to business electronic markets | * | 5148 | Fresh Fruits and Vegetables (business to business electronic markets) |
| | Grocery and related product, nec business to business electronic markets | * | 5149 | Groceries and Related Products, NEC (business to business electronic markets) |
| | Grain and field bean business to business electronic markets | * | 5153 | Grain and Field Beans (business to business electronic markets) |
| | Livestock business to business electronic markets | * | 5154 | Livestock (business to business electronic markets) |
| | Farm products, nec business to business electronic markets | * | 5159 | Farm-Product Raw Materials, NEC (business to business electronic markets) |
| | Plastics business to business electronic markets | * | 5162 | Plastics materials and Basic Forms and Shapes (business to business electronic markets) |
| | Chemicals business to business electronic markets | * | 5169 | Chemicals and Allied Products, NEC (business to business electronic markets) |
| | Petroleum and petroleum product business to business electronic markets | * | 5172 | Petroleum and Petroleum Products Wholesalers, Except Bulk Stations and Terminals (business to business electronic markets) |
| | Beer and ale business to business electronic markets | * | 5181 | Beer and Ale (business to business electronic markets) |
| | Wine and distilled beverage business to business electronic markets | * | 5182 | Wine and Distilled Alcoholic Beverages (business to business electronic markets) |
| | Farm supply business to business electronic markets | * | 5191 | Farm Supplies (business to business electronic markets) |
| | Book and other published material business to business electronic markets | * | 5192 | Books, Periodicals, and Newspapers (business to business electronic markets) |
| | Flower and nursery stock business to business electronic markets | * | 5193 | Flowers, Nursery Stock, and Florists' Supplies (business to business electronic markets) |
| | Tobacco and tobacco product business to business electronic markets | * | 5194 | Tobacco and Tobacco Products (business to business electronic markets) |
| | Paint and related product business to business electronic markets | * | 5195 | Paints, Varnishes, and Supplies (business to business electronic markets) |
| | Nondurable goods, nec business to business electronic markets | * | 5199 | Nondurable Goods, NEC (business to business electronic markets) |
| 42512 | Wholesale Trade Agents and Brokers | | | |
| | Motor vehicle wholesale trade agents and brokers | * | 5012 | Automobiles and Other Motor Vehicles (wholesale trade agents and brokers) |
| | Motor vehicle parts and supplies wholesale trade agents and brokers | * | 5013 | Motor Vehicle Supplies and New Parts (wholesale trade agents and brokers) |
| | Tire and tube wholesale trade agents and brokers | * | 5014 | Tires and Tubes (wholesale trade agents and brokers) |
| | Used motor vehicle parts wholesale trade agents and brokers | * | 5015 | Motor Vehicle Parts, Used (wholesale trade agents and brokers) |
| | Furniture wholesale trade agents and brokers | * | 5021 | Furniture (wholesale trade agents and brokers) |
| | Homefurnishings wholesale trade agents and brokers | * | 5023 | Homefurnishings (wholesale trade agents and brokers) |
| | Lumber, plywood, and panel wholesale trade agents and brokers | * | 5031 | Lumber, Plywood, Millwork, and Wood Panels (wholesale trade agents and brokers) |
| | Brick, stone, and related products wholesale trade agents and brokers | * | 5032 | Brick, Stone, and Related Construction Materials (wholesale trade agents and brokers) |
| | Roofing, siding and insulation wholesale trade agents and brokers | * | 5033 | Roofing, Siding, and Insulation Materials (wholesale trade agents and brokers) |
| | Construction materials, nec wholesale trade agents and brokers | * | 5039 | Construction Materials, NEC (wholesale trade agents and brokers) |
| | Photographic equipment and supplies wholesale trade agents and brokers | * | 5043 | Photographic Equipment and Supplies (wholesale trade agents and brokers) |
| | Office equipment wholesale trade agents and brokers | * | 5044 | Office Equipment (wholesale trade agents and brokers) |
| | Computers and related equipment wholesale trade agents and brokers | * | 5045 | Computers and Computer Peripheral Equipment and Software (wholesale trade agents and brokers) |
| | Commercial equipment, nec wholesale trade agents and brokers | * | 5046 | Commercial Equipment, NEC (wholesale trade agents and brokers) |
| | Medical, dental, and hospital equipment and supplies wholesale trade agents and brokers | * | 5047 | Medical, Dental, and Hospital Equipment and Supplies (wholesale trade agents and brokers) |
| | Ophthalmic goods wholesale trade agents and brokers | * | 5048 | Ophthalmic Goods (wholesale trade agents and brokers) |
| | Professional equipment and supplies wholesale trade agents and brokers | * | 5049 | Professional Equipment and Supplies, NEC (wholesale trade agents and brokers) |
| | Metals wholesale trade agents and brokers | * | 5051 | Metals Service Centers and Offices (wholesale trade agents and brokers) |
| | Coal and other mineral and ore wholesale trade agents and brokers | * | 5052 | Coal and Other Minerals and Ores (wholesale trade agents and brokers) |

| | | | |
|---|---|---|---|
| Electrical apparatus and equipment and wiring supplies wholesale trade agents and brokers | • | 5063 | Electrical Apparatus and Equipment, Wiring Supplies, and Construction Materials (wholesale trade agents and brokers) |
| Electrical appliance wholesale trade agents and brokers | • | 5064 | Electrical Appliances, Television and Radio Sets (wholesale trade agents and brokers) |
| Electronic parts wholesale trade agents and brokers | • | 5065 | Electronic Parts and Equipment, NEC (wholesale trade agents and brokers) |
| Hardware wholesale trade agents and brokers | • | 5072 | Hardware (wholesale trade agents and brokers) |
| Plumbing and hot water heating equipment wholesale trade agents and brokers | • | 5074 | Plumbing and Heating Equipment and Supplies (Hydronics) (wholesale trade agents and brokers) |
| Warm air heating and air-conditioning equipment wholesale trade agents and brokers | • | 5075 | Warm Air Heating and Air-Conditioning Equipment and Supplies (wholesale trade agents and brokers) |
| Refrigeration equipment and supplies wholesale trade agents and brokers | • | 5078 | Refrigeration Equipment and Supplies (wholesale trade agents and brokers) |
| Construction and mining equipment wholesale trade agents and brokers | • | 5082 | Construction and Mining (Except Petroleum) Machinery and Equipment (wholesale trade agents and brokers) |
| Farm and garden machinery wholesale trade agents and brokers | • | 5083 | Farm and Garden Machinery and Equipment (wholesale trade agents and brokers) |
| Industrial machinery and equipment wholesale trade agents and brokers | • | 5084 | Industrial Machinery and Equipment (wholesale trade agents and brokers) |
| Industrial supplies wholesale trade agents and brokers | • | 5085 | Industrial Supplies (wholesale trade agents and brokers) |
| Service industry equipment and supplies wholesale trade agents and brokers | • | 5087 | Service Establishment Equipment and Supplies (wholesale trade agents and brokers) |
| Transportation equipment and supplies, except motor vehicle, wholesale trade agents and brokers | • | 5088 | Transportation Equipment and Supplies, Except Motor Vehicles (wholesale trade agents and brokers) |
| Sporting goods wholesale trade agents and brokers | • | 5091 | Sporting and Recreational Goods and Supplies (wholesale trade agents and brokers) |
| Toys and hobby supply wholesale trade agents and brokers | • | 5092 | Toys and Hobby Goods and Supplies (wholesale trade agents and brokers) |
| Scrap and waste material wholesale trade agents and brokers | • | 5093 | Scrap and Waste Materials (wholesale trade agents and brokers) |
| Jewelry, watches, and related goods wholesale trade agents and brokers | • | 5094 | Jewelry, Watches, Precious Stones, and Precious Metals (wholesale trade agents and brokers) |
| Durable goods, nec wholesale trade agents and brokers | • | 5099 | Durable Goods, NEC (wholesale trade agents and brokers) |
| Printing and writing paper wholesale trade agents and brokers | • | 5111 | Printing and Writing Paper (wholesale trade agents and brokers) |
| Stationary and office supplies wholesale trade agents and brokers | • | 5112 | Stationary and Office Supplies (wholesale trade agents and brokers) |
| Other paper wholesale trade agents and brokers | • | 5113 | Industrial and Personal Service Paper (wholesale trade agents and brokers) |
| Drugs and related products wholesale trade agents and brokers | • | 5122 | Drugs, Drug Proprietaries, and Druggists' Sundries (wholesale trade agents and brokers) |
| Dry goods wholesale trade agents and brokers | • | 5131 | Piece Goods, Notions, and Other Dry Goods (wholesale trade agents and brokers) |
| Men's and boys' clothing wholesale trade agents and brokers | • | 5136 | Men's and Boy's Clothing and Furnishing (wholesale trade agents and brokers) |
| Women's and children's wholesale trade agents and brokers | • | 5137 | Women's, Children's, and Infant's Clothing and Accessories (wholesale trade agents and brokers) |
| Footwear wholesale trade agents and brokers | • | 5139 | Footwear (wholesale trade agents and brokers) |
| General line grocery wholesale trade agents and brokers | • | 5141 | Groceries, General Line (wholesale trade agents and brokers) |
| Frozen food wholesale trade agents and brokers | • | 5142 | Packaged Frozen Foods (wholesale trade agents and brokers) |
| Dairy product wholesale trade agents and brokers | • | 5143 | Dairy Products, Except Dried or Canned (wholesale trade agents and brokers) |
| Poultry and poultry product wholesale trade agents and brokers | • | 5144 | Poultry and Poultry Products (wholesale trade agents and brokers) |
| Confectionery wholesale trade agents and brokers | • | 5145 | Confectionery (wholesale trade agents and brokers) |
| Fish and seafood wholesale trade agents and brokers | • | 5146 | Fish and Seafoods (wholesale trade agents and brokers) |
| Meat and meat product wholesale trade agents and brokers | • | 5147 | Meats and Meat Products (wholesale trade agents and brokers) |
| Fresh fruit and vegetable wholesale trade agents and brokers | • | 5148 | Fresh Fruits and Vegetables (wholesale trade agents and brokers) |
| Grocery and related product, nec wholesale trade agents and brokers | • | 5149 | Groceries and Related Products, NEC (wholesale trade agents and brokers) |
| Grain and field bean wholesale trade agents and brokers | • | 5153 | Grain and Field Beans (wholesale trade agents and brokers) |
| Livestock wholesale trade agents and brokers | • | 5154 | Livestock (wholesale trade agents and brokers) |
| Farm products, nec wholesale trade agents and brokers | • | 5159 | Farm-Product Raw Materials, NEC (wholesale trade agents and brokers) |
| Plastics wholesale trade agents and brokers | • | 5162 | Plastics materials and Basic Forms and Shapes (wholesale trade agents and brokers) |
| Chemicals wholesale trade agents and brokers | • | 5169 | Chemicals and Allied Products, NEC (wholesale trade agents and brokers) |
| Petroleum and petroleum product wholesale trade agents and brokers | • | 5172 | Petroleum and Petroleum Products Wholesalers, Except Bulk Stations and Terminals (wholesale trade agents and brokers) |
| Beer and ale wholesale trade agents and brokers | • | 5181 | Beer and Ale (wholesale trade agents and brokers) |
| Wine and distilled beverage wholesale trade agents and brokers | • | 5182 | Wine and Distilled Alcoholic Beverages (wholesale trade agents and brokers) |
| Farm supply wholesale trade agents and brokers | • | 5191 | Farm Supplies (wholesale trade agents and brokers) |
| Book and other published material wholesale trade agents and brokers | • | 5192 | Books, Periodicals, and Newspapers (wholesale trade agents and brokers) |
| Flower and nursery stock wholesale trade agents and brokers | • | 5193 | Flowers, Nursery Stock, and Florists' Supplies (wholesale trade agents and brokers) |

| | | | |
|---|---|---|---|
| | Tobacco and tobacco product wholesale trade agents and brokers | * | 5194 Tobacco and Tobacco Products (wholesale trade agents and brokers) |
| | Paint and related product wholesale trade agents and brokers | * | 5195 Paints, Varnishes, and Supplies (wholesale trade agents and brokers) |
| | Nondurable goods, nec wholesale trade agents and brokers | * | 5199 Nondurable Goods, NEC (wholesale trade agents and brokers) |
| | Yacht brokers | * | 7389 Business Services, NEC (yacht brokers) |
| 4521 | Department Stores | | |
| 45211 | Department Stores | | |
| 452111 | Department Stores (except Discount Department Stores) | * | 5311 Department Stores (traditional department stores) |
| 452112 | Discount Department Stores | * | 5311 Department Stores (discount department stores) |
| 4541 | Electronic Shopping and Mail-Order Houses | | |
| 45411 | Electronic Shopping and Mail-Order Houses | | |
| 454111 | Electronic Shopping | * | 5961 Catalog and Mail-Order Houses (Internet shopping) |
| 454112 | Electronic Auctions | * | 5961 Catalog and Mail-Order Houses (electronic retail auctions) |
| 454113 | Mail-Order Houses | * | 5961 Catalog and Mail-Order Houses (except Internet shopping and electronic retail auctions) |
| 51 | Information | | |
| 511 | Publishing Industries (except Internet) | | |
| 5111 | Newspaper, Periodical, Book, and Directory Publishers | | |
| 51111 | Newspaper Publishers | * | 2711 Newspapers: Publishing or Publishing and Printing (except Internet newspaper publishing) |
| 51112 | Periodical Publishers | | |
| | Periodical publishers (except Internet periodicals) | * | 2721 Periodicals: Publishing or Publishing and Printing (except Internet periodical publishing) |
| | Shopping news publishing (except Internet) | * | 2741 Miscellaneous Publishing (shopping news publishing except on-line shopping news) |
| 51113 | Book Publishers | | |
| | Book publishers (except Internet) | * | 2731 Books: Publishing or Publishing and Printing (except music books and Internet book publishing) |
| | Technical book and manual publishers (except Internet) | * | 2741 Miscellaneous Publishing (technical books and manuals, except Internet publishing) |
| 51114 | Directory and Mailing List Publishers | | |
| | Directory and database publishers (except Internet) | * | 2741 Miscellaneous Publishing (database and directory publishing, except Internet) |
| | Mailing list compilers | * | 7331 Direct Mail Advertising Services (mailing list compilers) |
| 51119 | Other Publishers | | |
| 511191 | Greeting Card Publishers | * | 2771 Greeting Cards (publishing or publishing and printing greeting cards, except Internet greeting card publishing) |
| 511199 | All Other Publishers | * | 2741 Miscellaneous Publishing (except database, directory, sheet music, shopping news, technical manuals, technical books, and Internet versions of these activities) |
| 5112 | Software Publishers | | |
| 51121 | Software Publishers | * | 7372 Prepackaged Software (software publishing) |
| 512 | Motion Picture and Sound Recording Industries | | |
| 5121 | Motion Picture and Video Industries | | |
| 51211 | Motion Picture and Video Production | | 7812 Motion Picture and Video Tape Production |
| 51212 | Motion Picture and Video Distribution | | |
| | Motion picture and video distribution | * | 7822 Motion Picture and Video Tape Distribution (except video tape and cassette wholesalers) |
| | Commercial distribution film libraries | * | 7829 Services Allied to Motion Picture Distribution (commercial distribution film libraries) |
| 51213 | Motion Picture and Video Exhibition | | |
| 512131 | Motion Picture Theaters (except Drive-Ins) | | 7832 Motion Picture Theaters, Except Drive-In |
| 512132 | Drive-In Motion Picture Theaters | | 7833 Drive-In Motion Picture Theaters |
| 51219 | Post Production Services and Other Motion Picture and Video Industries | | |
| 512191 | Teleproduction and Other Postproduction Services | * | 7819 Services Allied to Motion Picture Production (teleproduction and postproduction services) |
| 512199 | Other Motion Picture and Video Industries | * | 7819 Services Allied to Motion Picture Production (except casting bureaus, wardrobe and equipment rental, talent payment services, teleproduction and postproduction services, reproduction of videos, film distributors, and other related motion picture production services) |
| 5122 | Sound Recording Industries | | |
| 51221 | Record Production | * | 8999 Services, NEC (record production) |

| | | | | |
|---|---|---|---|---|
| 51222 | Integrated Record Production/Distribution | * | 3652 | Phonograph Records and Prerecorded Audio Tapes and Disks (integrated record companies, except duplication only) |
| 51223 | Music Publishers | | | |
| | Music book publishing | * | 2731 | Books: Publishing, or Publishing and Printing (music books) |
| | Sheet music publishing | * | 2741 | Miscellaneous Publishing (sheet music publishing) |
| | Music publishers | * | 8999 | Services, NEC (music publishing) |
| 51224 | Sound Recording Studios | * | 7389 | Business Services, NEC (recording studios) |
| 51229 | Other Sound Recording Industries | | | |
| | Audio taping services | * | 7389 | Business Services, NEC (audio taping services) |
| | Radio program producers | * | 7922 | Theatrical Producers (Except Motion Picture) and Miscellaneous Theatrical Services (producers of radio programs) |
| 515 | Broadcasting (except Internet) | | | |
| 5151 | Radio and Television Broadcasting | | | |
| 51511 | Radio Broadcasting | | | |
| 515111 | Radio Networks | * | 4832 | Radio Broadcasting Stations (radio networks) |
| 515112 | Radio Stations | * | 4832 | Radio Broadcasting Stations (radio stations) |
| 51512 | Television Broadcasting | | 4833 | Television Broadcasting Stations |
| 5152 | Cable and Other Subscription Programming | | | |
| 51521 | Cable and Other Subscription Programming | * | 4841 | Cable and Other Pay Television Services (cable and other subscription programming) |
| 516 | Internet Publishing and Broadcasting | | | |
| 5161 | Internet Publishing and Broadcasting | | | |
| 51611 | Internet Publishing and Broadcasting | | | |
| | Internet newspaper publishers | * | 2711 | Newspapers: Publishing or Publishing and Printing (Internet newspaper publishing) |
| | Internet periodical publishers | * | 2721 | Periodicals: Publishing or Publishing and Printing (Internet newspaper publishing) |
| | Internet book publishers | * | 2731 | Books: Publishing or Publishing and Printing (Internet book publishing) |
| | Miscellaneous Internet publishing | * | 2741 | Miscellaneous Publishing (Internet publishing) |
| | Internet greeting card publishers | * | 2771 | Greeting Cards (Internet greeting card publishers) |
| | Internet broadcasting | * | 8999 | Services NEC (Internet broadcasting) |
| 517 | Telecommunications | | | |
| 5171 | Wired Telecommunications Carriers | | | |
| 51711 | Wired Telecommunications Carriers | | | |
| | Wired telephone service | * | 4813 | Telephone Communications, Except Radiotelephone (except resellers) |
| | Other wired telecommunications services | | 4822 | Telegraph and Other Message Communications |
| 5172 | Wireless Telecommunications Carriers (except Satellite) | | | |
| 51721 | Wireless Telecommunications Carriers (except Satellite) | | | |
| 517211 | Paging | * | 4812 | Radiotelephone Communications (paging carriers) |
| 517212 | Cellular and Other Wireless Telecommunications | | | |
| | Cellular carriers | * | 4812 | Radiotelephone Communications (cellular carriers) |
| | Other wireless telecommunications | * | 4899 | Radiotelephone Communications (ship-to-shore telecommunications) |
| 5173 | Telecommunications Resellers | | | |
| 51731 | Telecommunications Resellers | | | |
| | Wireless telecommunications resellers | * | 4812 | Radiotelephone Communications (cellular and paging resellers) |
| | Wired telecommunications resellers | * | 4813 | Telephone Communications, Except Radiotelephone (wired telecommunications resellers) |
| 5174 | Satellite Telecommunications | | | |
| 51741 | Satellite Telecommunications | * | 4899 | Communications Services, NEC (satellite telecommunications) |
| 5175 | Cable and Other Program Distribution | | | |
| 51751 | Cable and Other Program Distribution | * | 4841 | Cable and Other Pay Television Services (except cable and other subscription programming) |
| 5179 | Other Telecommunications | | | |
| 51791 | Other Telecommunications | * | 4899 | Communications Services, NEC (except radio dispatch, ship-to-shore, and satellite communications) |
| 518 | Internet Service Providers, Web Search Portals, and Data Processing Services | | | |
| 5181 | Internet Service Providers and Web Search Portals | | | |
| 51811 | Internet Service Providers and Web Search Portals | | | |
| 518111 | Internet Service Providers | | 7375 | Information Retrieval Services |
| 518112 | Web Search Portals | * | 8999 | Services, NEC (Internet web search portals) |

| | | | | |
|---|---|---|---|---|
| 5182 | Data Processing, Hosting, and Related Services | | | |
| 51821 | Data Processing, Hosting, and Related Services | | | |
| | Data processing and preparation services | | 7374 | Computer Processing and Data Preparation and Processing Services |
| | Disk and diskette conversion and recertification | * | 7379 | Computer Related Services, NEC (disk and diskette conversion and recertification) |
| | Microfilm service | * | 7389 | Business Services, NEC (microfilm services) |
| 519 | Other Information Services | | | |
| 5191 | Other Information Services | | | |
| 51911 | News Syndicates | * | 7383 | News Syndicates (except independent news correspondents) |
| 51912 | Libraries and Archives | | | |
| | Film archives | * | 7829 | Services Allied to Motion Picture Distribution (film archives) |
| | Libraries | | 8231 | Libraries |
| 51919 | All Other Information Services | * | 7389 | Business Services, NEC (stock photo agencies, press clipping services, and related information services) |

[FR Doc. 00–9816 Filed 4–19–00; 8:45 am]
BILLING CODE 3110–01–C

Federal Register

Thursday,
April 20, 2000

# Part III

# Department of Education

## Office of Educational Research and Improvement; The Comprehensive School Reform Research Grant Competition; Inviting Applications for New Awards for Fiscal Year (FY) 2000; Notice

## DEPARTMENT OF EDUCATION

**[CFDA No. 84.306S]**

## Office of Educational Research and Improvement; The Comprehensive School Reform Research Grant Competition; Notice Inviting Applications for New Awards for Fiscal Year (FY) 2000

*Purpose of Program:* The purpose of this program is to expand understanding of the full dimensions of school reform through rigorous investigation of the large-scale implementation of research-based comprehensive school reform models as a strategy for increasing student achievement.

For FY 2000 the competition for new awards focuses on projects designed to meet the priorities identified in the PRIORITIES section of this application notice.

*Eligible Applicants:* Institutions of higher education; State and local education agencies; public and private organizations, institutions, and agencies; and individuals.

*Applications Available:* May 12, 2000 for hardcopies. Also available by Web site (http://www.ed.gov/GrantApps/) on the date of publication of this notice.

*Deadline for Transmittal of Applications:* June 22, 2000.

*Estimated Available Funds:* Up to $5 million.

*Estimated Size of Awards:* The size of the awards will be commensurate with the nature and scope of the proposed work.

**Note:** The Department is not bound by any estimates in this notice.

*Budget Period:* 12-month period.

*Project Period:* Up to 36 months, with the exception of large-scale longitudinal field studies that may require 5 years to collect and analyze sufficient student or school outcome data.

*Page Limits:* The application must include six sections: title page form, research narrative, management plan, biographical sketches for principal investigators and other key personnel, budget summary form with budget narrative, and statement of equitable access (GEPA 427). The research narrative is limited to 50 pages, the management plan is limited to 5 pages, and biographical sketches are limited to 3 pages each, using 8½ x 11 inch paper with printing on only one side. Appendix materials should not be submitted. Pages in excess of these limitations will be *removed unread.* We strongly encourage applicants to use double-spacing, a 12-point font, and 1-inch margins. Reviewers are able to conduct the highest quality review when applications are concise and easy to read, with pages consecutively numbered.

*Applicable Statutes and Regulations:* (a) *Statutes:* This grant competition is authorized by P.L. 106–113, the Department of Education Appropriations Act, 2000 and by OERI's authorizing statute at 20 U.S.C. 6031. (b) *Regulations:* (1) The Education Department General Administrative Regulations (EDGAR) in 34 CFR Parts 74, 75, 77, 78, 80, 81, 82, 84, 86 (Part 86 applies only to Institutions of Higher Education), 97, 98 and 99; and (2) 34 CFR Part 700.

**SUPPLEMENTARY INFORMATION:** This research grant competition combines elements of both research and evaluation of comprehensive school reform. The Office of Educational Research and Improvement (OERI) expects that the knowledge gained from this work will provide the field with findings about specific models in promoting student achievement and enhance our understanding of how model developers and staff in schools can more effectively work together to improve student achievement. In addition, it should contribute to our overall understanding of how to increase student achievement and our continuing efforts to refine and improve education reform strategies.

Currently, very few comprehensive school reform models have been rigorously evaluated to determine their effectiveness. States, districts, schools, and the research community all would greatly benefit from additional rigorous evaluation of the various models. Equally important is additional information about how various model characteristics (*e.g.,* prescriptiveness, professional development strategy, and curriculum requirements) are likely to achieve success in schools with differing student populations, capacities, and needs.

This work should build on the growing awareness that comprehensive school reform as a strategy for improved student achievement will depend not only on the model being implemented, but also on the context and conditions that exist in classrooms, schools, and districts. What works or does not work in a classroom, school or district can be a function of a variety of factors and supporting conditions such as financial resources, teacher quality, district and school-level leadership, and collaborative strategies employed by model developers, districts, schools, and external technical assistance providers. In addition, the success or effectiveness of a model may be related to the needs of special populations including limited English proficient students or special education students.

OERI seeks rigorous research and evaluation designs that focus explicitly on comprehensive school reform's role in increasing student learning and achievement. The studies must contribute in a significant and cumulative way to extant research on comprehensive school reform; and produce findings that are sound, relevant, timely, and useful to practitioners and policymakers. Applicants should demonstrate understanding of research in progress, as well as plans for evaluations of this research. Research questions should be informed by the needs of practitioners and policymakers involved in comprehensive school reform initiatives and should be framed in ways that are likely to increase the utility of the findings ultimately produced. In addition, study designs should include mechanisms to share emerging findings with the field, as appropriate. The designs should also enable other interested researchers to conduct further data analyses, replication, verification and refinement of findings, and improvement of measurement procedures.

We encourage collaboration in the conduct of research. Proposal teams should reflect synergistic collaborations among model developers, researchers, practitioners, and others likely to produce relevant and actionable findings for educators and policymakers. We encourage research organizations to collaborate with groups and institutions historically underrepresented in education research, such as Historically Black Colleges and Universities, Hispanic-Serving Institutions, and Tribal Colleges and Universities.

OERI cautions that this research grant program is not intended to support model development or improvement efforts in individual schools or districts, but rather to support research efforts resulting in findings that apply to comprehensive school reform strategies for many schools in various communities, districts and states.

### Type of Awards

OERI anticipates that research designed to address one or more of these priorities may require large studies. For some projects, such as large-scale longitudinal studies, closer relationships with grantees than those typically afforded by discretionary grants may be appropriate. OERI therefore expects that some studies will be awarded cooperative agreements

rather than discretionary grants, as provided for in EDGAR, at 34 CFR 75.200.

OERI is interested in conducting research about the capacity of already developed comprehensive school reform models to increase student achievement in large numbers of schools outside the original development and field test sites. As previously noted, we will not fund the development of models or provide support simply to implement and/or evaluate a specific program in a specific site.

**Priorities**

For purposes of this competition, an externally developed, research-based comprehensive school reform model is defined as follows: (1) It includes an integrated set of supportive materials, frameworks or guidelines, and the capacity to provide implementation assistance to schools. (2) It supports all systems within a school—organization, instruction, professional development, and management. (3) All of the school's classrooms are actively engaged in and accountable for the implementation of a common, articulated strategy to improve teaching and learning for all students in the school. (4) The components are grounded in research on effective practice. (5) It has been developed and tested in one set of schools and has demonstrated capacity to serve other schools. (6) There is some evidence of the effectiveness of the model in increasing student achievement.

*Absolute Priority*

OERI has identified three research questions as being critical to understanding the full dimensions of the large-scale implementation of externally developed research-based comprehensive school reform models as a strategy for increasing student achievement. This competition focuses on research projects designed to meet the following absolute priority:

Conduct studies that address one or more of the following research questions:

(1) How effective are specific externally developed, research-based comprehensive school reform models in improving the achievement of all students?

(2) How are model characteristics related to success of model implementation and improvement in teaching and learning in specific types of settings and with specific types of students?

(3) What supporting conditions and strategies are necessary to effectively implement and sustain comprehensive school reform models in schools and school districts?

Under 34 CFR 75.105(c)(3) we consider only applications that meet this priority.

*Competitive Priority*

The Secretary gives competitive preference priority to applications that address research question (1) under the absolute priority, in addition to addressing one or both of the other research questions in a coherent and integrated design. OERI considers research question (1) to be central to the proposed work. OERI believes studies designed to address question (1), and one or both of the other research questions will increase the rigor and robustness of school reform research and evaluation. In addition, study designs that link elements of research questions (2) and/or (3) with research question (1) will be more useful to model developers, policymakers, and practitioners.

Under 34 CFR 75.105(c)(2)(ii), OERI will select an application that meets the competitive priority over an application of comparable merit that does not meet the priority.

A principal investigator may submit only one proposal and may collaborate in one other proposal as a co-investigator. Group and collaborative proposals involving more than one institution must be submitted as a single administrative package from one of the institutions involved. Principal investigators will be required to meet at least twice each year with agency staff, consultants, and other OERI grantees and contractors for the purpose of expanding collaborative efforts within this field of research. OERI anticipates the possibility of funding two or more proposals that address the same or similar themes, topics or issues. OERI provides opportunities for grantees to inform each other's work by discussing common challenges, methodological issues, and ways to maximize the impact of this program on student achievement for all students. Principal investigators will also be required to help identify crosscutting research issues, and to work together to better inform other researchers, practitioners, and policymakers of emerging findings.

Depending upon the type of research proposed, OERI might require some common study design elements. Investigators may be asked to develop a core of common research questions, outcome measures, instruments, or data analysis procedures so that study findings are comparable.

*Waiver of Proposed Rulemaking*

In accordance with the Administrative Procedure Act (5 U.S.C. 553), it is the practice of the Department to offer interested parties the opportunity to comment on proposed priorities that are not taken directly from statute. Ordinarily, this practice would have applied to the priorities in this notice. Section 437(d)(1) of the General Education Provisions Act (GEPA), 20 U.S.C. l232(d)(1), however, exempts rules that apply to the first competition under a new or substantially revised program from this requirement.

The conference agreement for the FY 2000 appropriation for OERI's national research institutes includes $20,000,000 for ''current and expanded comprehensive school reform research and development.'' (P.L. 106–113, the Department of Education Appropriations Act, 2000.) Of that sum, approximately $15 million will support continuation of the current activities (contracts resulting from the FY 1999 design competition for new models for comprehensive school reform at the middle and high school level). An estimated $5 million will be used for the discretionary grants or cooperative agreements that are the subject matter of this competition. This expanded program of research and development will focus on studies addressing the student achievement effects of various comprehensive school reform models.

Therefore, the Assistant Secretary of OERI, in accordance with section 437(d)(1) of GEPA, to ensure timely awards, has decided to forego public comment with respect to the priorities. The priorities will apply only to the FY 2000 grant competition.

**FOR APPLICATIONS CONTACT:** *Electronic Copy.* Applications will be available on the World Wide Web at the following sites:

http://www.ed.gov/offices/OERI/csrrdp.html

http://www.ed.gov/GrantApps/

*Hard Copy.* Hard copies will be available after May 12, 2000 from the Education Publications Center (ED Pubs), P.O. Box 1398, Jessup, MD 20794–1398. Telephone (toll free): 1–877–433–7827. FAX: (301) 470–1244. If you use a telecommunications device for the deaf (TDD), you may call (toll free): 1–877–576–7734.

You may also contact ED Pubs at its Web site:

http://www.ed.gov/pubs/edpubs.html

or you may contact ED Pubs at its E-mail address:

edpubs@inet.ed.gov

If you request an application from ED Pubs, be sure to identify this competition as follows: CFDA Number 84.306S.

**FOR FURTHER INFORMATION CONTACT:** Cheryl Kane, U.S. Department of Education, 555 New Jersey Avenue, NW., room 604B, Washington, DC 20202–5530. Telephone: (202) 208–2991. E-mail: cheryl kane@ed.gov or D. Hollinger Martinez, U.S. Department of Education, 555 New Jersey Ave, NW., room 610C, Washington, DC 20208–5521. Telephone: (202) 219–2239. E-mail: debra__hollinger__martinez@ed.gov. If you use a telecommunications device for the deaf (TDD), you may call the Federal Information Relay Service (FIRS) at 1–800–877–8339.

Individuals with disabilities may obtain this document in an alternative format (*e.g.,* Braille, large print, audiotape, or computer diskette) on request by contacting either of the individuals under **FOR FURTHER INFORMATION CONTACT**.

Individuals with disabilities may obtain a copy of the application package in an alternative format by contacting that person. However, the Department is not able to reproduce in an alternative format the standard forms included in the application package.

## Electronic Access to This Document

You may view this document, as well as all other Department of Education documents published in the **Federal Register**, in text or Adobe Portable Document Format (PDF) on the Internet at either of the following sites:

http://ocfo.ed.gov/fedreg.htm
http://www.ed.gov/news.html

To use the PDF you must have the Adobe Acrobat Reader, which is available free at either of the previous sites. If you have questions about using the PDF, call the U.S. Government Printing Office (GPO), toll free, at 1–888–293–6498; or in the Washington, DC area at (202) 512–1530.

**Note:** The official version of this document is the document published in the **Federal Register**. Free Internet access to the official edition of the **Federal Register** and the Code of Federal Regulations is available on GPO Access at: http://www.access.gpo.gov/nara/index.html.

**Program Authority:** 20 U.S.C. 6031.

**C. Kent McGuire,**

*Assistant Secretary for Educational Research and Improvement.*

[FR Doc. 00–9932 Filed 4–19–00; 8:45 am]

BILLING CODE 4000–01–U

Federal Register

Thursday,
April 20, 2000

# Part IV

# Department of Housing and Urban Development

## 24 CFR Part 1000

## Revision to Cost Limits for Native American Housing; Proposed Rule

**DEPARTMENT OF HOUSING AND URBAN DEVELOPMENT**

**24 CFR Part 1000**

**[Docket No. FR–4517–P–01]**

**RIN 2577–AC14**

## Revision to Cost Limits for Native American Housing

**AGENCY:** Office of Public and Indian Housing, HUD.

**ACTION:** Proposed rule.

**SUMMARY:** This proposed rule would revise the way construction costs are controlled in the Indian Housing Block Grant (IHBG) program administered by IHBG grantees, who are Indian Tribes or their Tribally Designated Housing Entities (TDHEs). It would replace the system of HUD-established Dwelling Construction and Equipment costs with a choice between HUD-established Total Development Costs or standards established by the TDHE based on standards in its geographic area. This rule also would provide that the construction, acquisition, or assistance of non-dwelling buildings is either subject to standards established by the TDHE or to documentation of comparability to the size, design and amenities of similar buildings constructed in the geographic area.

**DATES:** *Comments Due Date:* June 19, 2000.

**ADDRESSES:** Interested persons are invited to submit comments regarding this proposed rule to the Regulations Division, Office of General Counsel, Room 10276, Department of Housing and Urban Development, 451 Seventh Street, SW, Washington, DC 20410–0500. Communications should refer to the above docket number and title. Facsimile (FAX) comments are not acceptable. A copy of each communication submitted will be available for public inspection and copying between 7:30 a.m. and 5:30 p.m. weekdays at the above address.

**FOR FURTHER INFORMATION CONTACT:** Bruce Knott, Office of Native American Programs, at 303–675–1600, extension 3302, or email him at the following address: Bruce__A.__Knott@hud.gov. Persons with hearing or speech impairments may access the above telephone number via TTY by calling the Federal Information Relay Service at 1–800–877–8339.

**SUPPLEMENTARY INFORMATION:**

### Reason for the Proposed Change

Under the United States Housing Act of 1937 (''1937 Act'') (42 U.S.C. 1437 *et seq.*), the construction cost limits were called Total Development Cost limits, informally referred to as TDCs. These limits included the total cost of development, including both soft and hard costs of construction.

Under the Native American Housing Assistance and Self-Determination Act (NAHASDA)(25 U.S.C. 4101 *et seq.*), the new regulations provided for a new system of construction cost limits called Dwelling Construction and Equipment costs, also referred to as DC&Es (see 24 CFR 1000.156). In response to concerns expressed by tribes, the negotiated rule making (neg reg) committee designed DC&Es to begin from the same base design as TDCs, but limit only the hard costs of construction within five feet of the foundation, believing this would provide more flexibility in resolving unusual site cost issues. When tribes/TDHEs actually began utilizing DC&Es, they found them to be a barrier in providing housing as many tribes had historically used part of the soft cost allocation for the actual construction; therefore, when the cost limits included money for only the hard costs, the limits were inadequate.

In response to these new concerns, the National Office of Native American Programs (NONAP) began working with a tribal consulting group on the cost limit issue in the fall of 1998. This group was comprised of a tribal representative from each of the ONAP office jurisdictions, one HUD field staff person, and two HUD Headquarters staff. Their objective was to write language that incorporated both the self determination and affordable housing intentions of NAHASDA. This group wrote proposed changes for dwelling cost limits. This language was mailed to tribes and TDHEs for consultation in January, 1999. This group then wrote non dwelling cost limits and mailed them to tribes/TDHEs for consultation in April, 1999. The rule reflects comments received during the consultation and during HUD's clearance process.

### Implications

If these proposed changes are adopted in substantially the same form as below, the Department will publish TDCs, instead of the present DC&Es. The tribes/TDHEs will choose whether to use the published TDCs, or develop their own standards, consistent with this rule.

### Findings and Certifications

*Public Reporting Burden*

The Paperwork Reduction Act of 1995 (44 U.S.C. 3501–3520) does not apply to the proposed information collection requirements contained in §§ 1000.158 and 1000.162 because HUD anticipates that the requirements will apply to fewer than 10 TDHEs.

*Consultation With Indian Tribal Governments*

In accordance with Executive Order 13084, *Consultation and Coordination With Indian Tribal Governments,* issued on May 14, 1998, the Department has consulted with representatives of tribal governments concerning the subject of this rule. As described above, the rule originated from concerns brought to our attention by tribal representatives. In accordance with that Executive Order, the docket file for this rulemaking contains copies of written communications submitted to HUD by tribal governments.

*Impact on Small Entities*

The Regulatory Flexibility Act (5 U.S.C. 601–612) requires that an agency analyze the impact of a rule on small entities whenever it determines that the rule is likely to have a significant impact on a substantial number of small entities. While many TDHEs may be small entities, the effect of this rule developed in consultation with tribal representatives, will not be likely to have a significant impact on a substantial number of them. As mentioned above, it is expected that fewer than 10 TDHEs will be affected by this rule. To the extent that small entities will be affected, the impact is expected to be beneficial, as a result of the consultation that has taken place. We encourage small entities to submit comments, however, on ways that the impact of the rule on them could be minimized.

*Environmental Impact*

A Finding of No Significant Impact with respect to the environment has been made in accordance with HUD regulations at 24 CFR part 50, which implement section 102(2)(C) of the National Environmental Policy Act of 1969. The Finding of No Significant Impact is available for public inspection between the hours of 7:30 a.m. and 5:30 p.m. weekdays in the Regulations Division at the address stated above.

*Federalism Impact*

The General Counsel, as the Designated Official under section 6(a) of Executive Order 13132, *Federalism,* has determined that this rule does not impose substantial direct compliance costs on States or local governments or preempt State law within the meaning of the Executive Order. As a result, the

rule is not subject to review under the order.

*Unfunded Mandates*

The Unfunded Mandates Reform Act of 1995 (2 U.S.C. 1532) establishes requirements for Federal agencies to assess the effects of their regulatory actions on State, local, and tribal governments and the private sector. This proposed rule does not impose a Federal mandate that will result in the expenditure by State, local, or tribal governments in the aggregate, or by the private sector, of $100 million or more in any one year.

*Regulatory Review*

The Office of Management and Budget (OMB) has reviewed this proposed rule under Executive Order 12866, *Regulatory Planning and Review,* issued by the President on September 30, 1993. OMB determined that this rule is a ''significant regulatory action'' as defined in section 3(f) of the Order (although not an economically significant regulatory action under the Order). Any changes made in this proposed rule after its submission to OMB are identified in the docket file, which is available for public inspection during regular business hours in the Regulations Division, Office of General Counsel, Room 10276, U.S. Department of Housing and Urban Development, 451 Seventh Street, SW, Washington, DC 20410.

*Catalog*

The Catalog of Federal Domestic Assistance number for this program is 14.867.

**List of Subjects in 24 CFR Part 1000**

Aged, Community development block grants, Grant programs—housing and community development, Grant programs—Indians, Indians, Individuals with disabilities, Low and moderate income housing, Reporting and recordkeeping requirements.

Accordingly, HUD proposes to amend part 1000 of title 24 of the Code of Federal Regulations as follows:

## PART 1000—NATIVE AMERICAN HOUSING ACTIVITIES

1. The authority citation for part 1000 continues to read as follows:

**Authority:** 25 U.S.C. 4101 *et seq.*; 42 U.S.C. 3535(d).

2. Revise § 1000.156 to read as follows:

**§ 1000.156 Is affordable housing developed, acquired, or assisted under the IHBG program subject to limitations on cost or design standards?**

Yes. Affordable housing must be of moderate design. For these purposes, moderate design is defined as housing that is of a size and with amenities consistent with unassisted housing offered for sale in the Indian tribe's general geographic area to buyers who are at or below the area median income. The local determination of moderate design applies to all housing assisted under an affordable housing activity, including development activities (e.g., acquisition, new construction, reconstruction, moderate or substantial rehabilitation of affordable housing and homebuyer assistance) and model activities. Acquisition includes assistance to a family to buy housing.

3. Add new §§ 1000.158, 1000.160, and 1000.162 to read as follows:

**§ 1000.158 How will a NAHASDA grant recipient know that the housing assisted under the IHBG program meets the requirements of § 1000.156?**

(a) A recipient must use one of the methods specified in paragraph (b) or (c) of this section to determine if an assisted housing project meets the moderate design requirements of § 1000.156. For purposes of this requirement, a project is one or more housing units, of comparable size and design, developed with assistance provided by the Act.

(b) The recipient may adopt written standards for its affordable housing programs that reflect the requirement specified in § 1000.156. The standards must describe the type of housing, explain the basis for the standards, and use similar housing in the Indian tribe's general geographic area. Units with the same number of bedrooms within a project must be comparable with respect to size, cost, and amenities. For each affordable housing project, the recipient must maintain documentation substantiating compliance with the adopted housing standards. The standards and documentation substantiating compliance for each activity must be available for review by the general public and, upon request, by HUD. Prior to awarding a contract for the construction of housing or beginning construction using its own workforce, the recipient must complete a comparison of the cost of developing or acquiring/rehabilitating the affordable housing with the limits provided by the TDC discussed in paragraph (c) of this section and may not, without prior HUD approval, exceed by more than 10 percent the TDC maximum cost for the project. In developing standards under this paragraph, the recipient must establish, maintain, and follow policies that determine a local definition of moderate design which considers:

(1) Gross area;

(2) Total cost to provide the housing;

(3) Environmental concerns and mitigations;

(4) Climate;

(5) Comparable housing in geographical area;

(6) Local codes, ordinances and standards;

(7) Cultural relevance in design;

(8) Design and construction features that are reasonable, and necessary to provide decent, safe, sanitary and affordable housing; and

(9) Design and construction features that are accessible to persons with a variety of disabilities.

(c) If the recipient has not adopted housing standards specified in paragraph (b) of this section, Total Development Cost (TDC) limits published periodically by HUD establish the maximum amount of funds (from all sources) that the recipient may use to develop or acquire/rehabilitate affordable housing. The recipient must complete a comparison of the cost of developing or acquiring/rehabilitating the affordable housing with the limits provided by the TDC and may not, without prior HUD approval, exceed the TDC maximum cost for the project.

**§ 1000.160 Are non-dwelling buildings developed, acquired or assisted under the IHBG program subject to limitations on cost or design standards?**

Yes. Non-dwelling buildings must be of a design, size and with features or amenities that are reasonable and necessary to accomplish the purpose intended by the buildings. The purpose of a non-dwelling building must be to support an affordable housing activity, as defined by the Act. These limits apply to buildings such as community facilities and office space; they do not apply to structures related to utilities or power supply.

**§ 1000.162 How will a recipient know that non-dwelling buildings assisted under the IHBG program meet the requirements of 1000.160?**

(a) The recipient must use one of the methods described in paragraph (b) or (c) of this section to determine if a non-dwelling building meets the limitation requirements of § 1000.160. If the recipient develops, acquires, or rehabilitates a non-dwelling building with combined funds (from NAHASDA and other sources), then the cost limit standard established under these regulations applies to the combined

activity. If funds are being combined from two different sources, the standards of the funding source with the more restrictive rules apply.

(b)(1) The recipient may adopt written standards for non-dwelling buildings. The standards must describe the type of building and must clearly describe the criteria to be used to guide the cost, size, design, features, amenities, performance or other factors. The standards for such buildings must be able to support the reasonableness and necessity for these factors and to clearly identify the affordable housing activity that is being provided.

(2) When the recipient applies a standard to a particular building, it must document the following:

(i) Identification of targeted population to benefit from the building;

(ii) Identification of need or problem to be solved;

(iii) Affordable housing activity provided or supported by the building;

(iv) Alternatives considered;

(v) Provision for future growth and change;

(vi) Cultural relevance of design;

(vii) Size and scope supported by population and need;

(viii) Design and construction features that are accessible to persons with a variety of disabilities;

(ix) Cost; and

(x) Compatibility with community infrastructure and services.

(c) If the recipient has not adopted building program standards specified in paragraph (b) of this section, then it must demonstrate and document that the non-dwelling building is of a cost, size, design and with amenities consistent with similarly designed and constructed buildings in the recipient's general geographic area.

Dated: March 27, 2000.

**Harold Lucas,**

*Assistant Secretary for Public and Indian Housing.*

[FR Doc. 00–9929 Filed 4–19–00; 8:45 am]

BILLING CODE 4210–33–P

Federal Register

Thursday,
April 20, 2000

# Part V

# Department of Defense

**Department of the Army, Corps of Engineers**
**33 CFR Part 323**

# Environmental Protection Agency

**40 CFR Part 232**

**Proposed Revisions to the Clean Water Act Regulatory Definitions of "Fill Material" and "Discharge of Fill Material"; Proposed Rule**

**DEPARTMENT OF DEFENSE**

**Department of the Army, Corps of Engineers**

**33 CFR Part 323**

**ENVIRONMENTAL PROTECTION AGENCY**

**40 CFR Part 232**

**[FRL–6582–8]**

## Proposed Revisions to the Clean Water Act Regulatory Definitions of ''Fill Material'' and ''Discharge of Fill Material''

**AGENCIES:** U.S. Army Corps of Engineers, Department of the Army, DOD; and Environmental Protection Agency.

**ACTION:** Proposed rule.

**SUMMARY:** The Department of the Army (Army) and the Environmental Protection Agency (EPA) today are jointly proposing to revise their Clean Water Act (CWA) regulations defining the term ''fill material.'' At present, the Army and EPA definitions of ''fill material'' differ from each other, and this has resulted in regulatory uncertainty and confusion. The existing Army definition defines ''fill material'' as any material used for the primary purpose of replacing an aquatic area with dry land or of changing the bottom elevation of a water body, and specifically excludes from that definition any material discharged into the water primarily to dispose of waste, as that activity is regulated under section 402 of the Clean Water Act. The existing EPA definition defines ''fill material'' as any pollutant which replaces a portion of the waters of the U.S. with dry land or which changes the bottom elevation of such waters, regardless of the purpose of the discharge. Today's proposal would amend both the Army and EPA definitions of ''fill material'' to provide a single definition of that term, and thus ensure proper, consistent, and more effective regulation under the CWA of materials that have the effect of replacing any portion of a water of the U.S. States with dry land or of changing the bottom elevation of any portion of a water of the U.S. Today's proposal also would make a change to the definition of the term ''discharge of fill material'' in order to provide further clarification of this issue.

**DATES:** Written comments must be submitted by June 19, 2000.

**ADDRESSES:** Send written comments on the proposed rule to the Office of the Chief of Engineers, ATTN CECW–OR, 20 Massachusetts Avenue, Washington, DC 20314–1000.

We request that commenters submit any references cited in their comments. We also request that commenters submit an original and 2 copies of their written comments and enclosures. Commenters that want receipt of their comments acknowledged should include a self-addressed, stamped envelope. All written comments must be postmarked or delivered by hand. No facsimiles (faxes) will be accepted.

A copy of the supporting documents for this proposed rule is available for review in Room 6225 at the U.S. Army Corps of Engineers' Pulaski Building, located at 20 Massachusetts Avenue, Washington, DC 20314–1000. For access to docket materials, call (202) 761–0199 between 9 a.m. and 3:30 p.m. for an appointment. Comments received on the proposed rule will also be available for examination in Corps District or Division offices.

**FOR FURTHER INFORMATION CONTACT:** For information on the proposed rule, contact either Mr. Thaddeus Rugiel, U.S. Army Corps of Engineers, ATTN CECW–OR, 20 Massachusetts Avenue, Washington, DC 20314–1000, phone: (202) 761—0199, e-mail: Thaddeus. J.Rugiel@ HQ02.USACE.ARMY.MIL, or Mr. John Lishman, U.S. Environmental Protection Agency, Office of Wetlands, Oceans and Watersheds (4502F), Ariel Rios Building, 1200 Pennsylvania Avenue NW, Washington, DC 20460, phone: (202) 260–9180, e-mail: lishman.john@ epa.gov.

**SUPPLEMENTARY INFORMATION:**

### I. Background

*A. Plain Language*

In compliance with President Clinton's June 1, 1998, Executive Memorandum on Plain Language in government writing, this preamble is written using plain language. Thus, the use of ''we'' in this action refers to EPA and the U.S. Army Corps of Engineers (Corps), and the use of ''you'' refers to the reader.

*B. Potentially Regulated Entities*

Persons or entities that discharge material to waters of the U.S. that has the effect of replacing any portion of a water of the U.S. with dry land or changing the bottom elevation of any portion of a water of the U.S. could be regulated by today's proposed rule. The CWA generally prohibits the discharge of pollutants into waters of the U.S. without a permit issued by EPA or a State approved by EPA under section 402 of the Act, or, in the case of dredged or fill material, by the Corps or an approved State under section 404 of the Act. Today's proposal addresses the CWA section 404 program's definitions of ''fill material'' and ''discharge of fill material,'' which are important for determining whether a particular discharge is subject to regulation under CWA section 404. In developing today's proposal to reconcile the agencies differing definitions, we have carefully considered our current regulatory practice and the terms of a 1986 Memorandum of Agreement Between the Assistant Administrators for External Affairs and Water, U.S. Environmental Protection Agency, and the Assistant Secretary of the Army for Civil Works Concerning Regulation of Discharges of Solid Waste Under the Clean Water Act (''1986 Solid Waste MOA''). The 1986 Solid Waste MOA sets out a number of factors to help determine whether material is subject to the CWA under section 404 or 402. Today's proposal does not alter current practice, but rather is intended to clarify what constitutes ''fill material'' subject to CWA section 404. Examples of entities potentially regulated include:

| Category | Examples of potentially affected entities |
|---|---|
| State/Tribal governments or instrumentalities | State/Tribal agencies or instrumentalities that discharge material that has the effect of replacing any portion of a water of the U.S. with dry land or changing the bottom elevation of a water of the U.S. |
| Local governments or instrumentalities | Local governments or instrumentalities that discharge material that has the effect of replacing any portion of a water of the U.S. with dry land or changing the bottom elevation of a water of the U.S. |
| Federal government agencies or instrumentalities | Federal government agencies or instrumentalities that discharge material that has the effect of replacing any portion of a water of the U.S. with dry land or changing the bottom elevation of a water of the U.S. |

| Category | Examples of potentially affected entities |
|---|---|
| Industrial, commercial, or agricultural entities | Industrial, commercial, or agricultural entities that discharge material that has the effect of replacing any portion of a water of the U.S. with dry land or changing the bottom elevation of a water of the U.S. |
| Land developers and landowners | Land developers and landowners that discharge material that has the effect of replacing any portion of a water of the U.S. with dry land or changing the bottom elevation of a water of the U.S. |

This table is not intended to be exhaustive, but rather provides a guide for readers regarding entities that are likely to be regulated by this action. This table lists the types of entities that we are now aware of that could potentially be regulated by this action. Other types of entities not listed in the table could also be regulated. To determine whether your organization or its activities are regulated by this action, you should carefully examine the applicability criteria in § 230.2 of Title 40 of the Code of Federal Regulations, as well as the preamble discussion in section II of today's proposal. If you have questions regarding the applicability of this action to a particular entity, consult the persons listed in the preceding **FOR FURTHER INFORMATION CONTACT** section.

*C. Overview of Clean Water Act*

The CWA is the primary federal statute addressing the discharge of pollutants to waters of the U.S. Section 301(a) of the CWA generally prohibits such discharges except as may be authorized by a permit issued under the Act. Two different permitting regimes are created by the Act: (1) section 404 permits, primarily administered by the Corps, addressing the discharge of dredged or fill material, and (2) section 402 permits (commonly referred to as National Pollutant Discharge Elimination System, or ''NPDES'' permits), administered by EPA and the States, which address the discharge of all other pollutants. The CWA defines the term ''pollutant'' to include materials such as rock, sand, and cellar dirt that often serve as ''fill material.'' The CWA, however, does not define the term ''fill material,'' leaving it to the agencies to adopt a definition consistent with the statutory language and scheme. Providing a clear and consistent definition for the term ''fill material'' under the CWA is important in determining whether a proposed discharge of a pollutant is subject to regulation under section 404 or section 402.

In keeping with the fundamental difference in the nature and effect of the discharge that each program was intended by Congress to address, sections 404 and 402 employ different approaches to regulating the discharges to which they apply. The section 402 program is focused on (although not limited to) discharges such as wastewater discharges from industrial operations and sewage treatment plants, stormwater and the like. See, e.g., CWA sections 304 (b) and (d) and 402(p). Pollutant discharges are controlled under the section 402 program principally through the imposition of effluent limitations, which are restrictions on the ''quantities, rates, and concentrations of chemical, physical, biological and other constituents which are discharged from point sources into navigable waters'' (CWA section 502(11)). Section 402 permits must include effluent limitations that reflect treatment with available pollution control technology, and any more stringent limitations necessary to meet water quality standards for the receiving water (CWA section 301(b)). There are no statutory or regulatory provisions under the section 402 program designed to address discharges that convert waters of the U.S. to dry land. Moreover, the section 402 permitting process does not require an evaluation of alternatives to a proposed discharge or mitigation for unavoidable impacts.

The section 404 permitting program differs from the section 402 program in several fundamental respects. First, section 404 focuses exclusively on two materials: dredged material and fill material. The term ''fill material'' clearly contemplates material that fills in a water body, and thereby converts it to dry land or changes the bottom elevation. Fill material differs fundamentally from the types of pollutants covered by section 402 because the principal environmental concern is the loss of a portion of the water body itself. For this reason, the section 404 permitting process focuses on different considerations than the section 402 permitting program. Section 404(b) of the CWA directs the Corps to apply Guidelines promulgated under section 404(b)(1) of the CWA, which in turn must be based on criteria comparable to the criteria contained in section 403(c) of the CWA. Among other things, those criteria expressly require consideration of ''other possible locations and methods of disposal'' and ''land-based alternatives.''

The section 404(b)(1) Guidelines do provide for consideration of the effects of chemical contaminants on water quality in a number of ways, specifically requiring compliance with applicable State water quality standards (40 CFR 230.10(b)(1)), toxic effluent limits or standards established under CWA section 307 (40 CFR 230.10(b)(2)), and appropriate use of chemical and biological testing to evaluate contaminant effects (40 CFR 230.11(d) and (e); 230.60). However, because section 404 was intended by Congress to provide a vehicle for regulating materials whose effects include the physical conversion of waters to non-waters or other physical alterations of aquatic habitat, the section 404(b)(1) Guidelines go beyond such a water quality based approach to require numerous additional considerations before a section 404 permit may be issued. These include careful consideration of the effects of the discharge on the aquatic ecosystem as a whole, as well as evaluation of alternatives to the discharge and measures to minimize and compensate for unavoidable adverse effects.

Under the section 404(b)(1) Guidelines, discharges having significant adverse effects on aquatic ecosystems are not allowable (40 CFR 230.10(c) (2) and (3)). As a result, the Guidelines require evaluation of the effects of discharges on the aquatic ecosystem (40 CFR 230.11(e)), including cumulative impacts and secondary effects (40 CFR 230.11(g) and (h)). The Guidelines also set forth specific provisions for considering impacts on the aquatic ecosystem, including effects on aquatic organisms in the food web and other wildlife (40 CFR part 230, subpart D). In addition, the Guidelines do not allow discharges that would have significant adverse effects on human health, recreation, aesthetic, and economic values (40 CFR 230.10(c) (1) and (4)). The Guidelines set forth specific provisions for considering such impacts (40 CFR part 230, subpart F).

In addition to providing for careful assessment of the overall effects of the discharge on aquatic ecosystems and other amenities, the Guidelines do not

allow a discharge if there are practicable alternatives with less adverse effects on the aquatic ecosystem (40 CFR 230.10(a)). The Guidelines further require that if a discharge is allowed, appropriate and practicable steps must be taken to minimize potential adverse effects to the aquatic ecosystem and mitigate for unavoidable impacts (40 CFR 230.10(d)). They also identify a range of such potential measures for consideration in the permitting process (40 CFR part 230, subpart H). The Guidelines also provide for mitigation to compensate for unavoidable adverse effects. See, February 1990 Memorandum of Agreement Between the Environmental Protection Agency and the Department of the Army Concerning the Determination of Mitigation Under the Clean Water Act section 404(b)(1) Guidelines.

*D. Discussion of the Existing Corps and EPA Definitions of Fill Material*

Prior to 1977, both the Corps and EPA had defined ''fill material'' as ''any pollutant used to create fill in the traditional sense of replacing an aquatic area with dry land or of changing the bottom elevation of a water body for any purpose. * * *'' 40 FR 31325 (July 25, 1975); 40 FR 41291 (September 5, 1975).

In 1977, the Corps amended its definition of ''fill material'' to add a ''primary purpose test,'' and specifically excluded from that definition material that was discharged primarily to dispose of waste. 42 FR 37130 (July 19, 1977). This change was adopted by the Corps because it recognized that some discharges of solid waste materials technically fit the definition of fill material; however, the Corps believed that such waste materials should not be subject to regulation under the CWA section 404 program. Specifically, the Corps' definition of ''fill material,'' unchanged since 1977, currently reads as follows:

> (e) The term ''fill material'' means any material used *for the primary purpose* of replacing an aquatic area with dry land or of changing the bottom elevation of an [sic] water body. The term does not include any pollutant discharged into the water primarily to dispose of waste, *as that activity is regulated under section 402 of the Clean Water Act.*'' 33 CFR 323.2(e) (emphasis added).

EPA did not amend its regulations to adopt a ''primary purpose test'' similar to that used by the Corps. Instead, the EPA regulations at 40 CFR 232.2 currently define ''fill material'' as ''any 'pollutant' which replaces portions of the 'waters of the United States'' with dry land or which changes the bottom elevation of a water body *for any purpose*'' (emphasis added). EPA's definition focuses on the effect of the material, rather than allowing the purpose of the discharge to affect whether it would be regulated by section 404 or section 402.

*E. Problems and Issues With the Existing Definitions*

These differing definitions of the term ''fill material'' have resulted in inconsistencies which impede the fair and effective implementation of the CWA in a number of ways. For example, in the case of the Corps definition, use of a ''primary purpose test'' appears to require the Corps to make a subjective determination about the primary purpose of a prospective discharge. This subjective determination becomes even more problematic to make where the proposed discharge has multiple purposes. The ''primary purpose test'' also allows any prospective discharger or project proponent to seek to affect which regulatory regime would apply by simply asserting a purported purpose. This definition also lends itself to the possible exclusion of materials that are most commonly used for the very purpose of raising the elevation of an area (i.e., of filling a water of the U.S.) if the materials are a waste product of some other activity.

The confusion caused by the ''primary purpose test'' has also engendered extensive litigation. We are concerned that if the inconsistencies and ambiguities in the regulatory definitions of ''fill material'' are not corrected, further litigation would arise and future court decisions could reduce the ability of the CWA section 404 program to protect the quality of the aquatic environment, and the overall public interest.

The court decision that most clearly illustrates the serious problems caused by the ''primary purpose test'' is the Ninth Circuit Court of Appeals decision in *Resource Investments Incorporated* v. *U.S. Army Corps of Engineers,* 151 F.3d 1162 (9th Cir. 1998) (the RII case). This case involved a CWA section 404 permit application for a solid waste landfill proposed to be built in waters of the U.S. located in the State of Washington. The Corps' Seattle District Engineer denied the section 404 permit, on the grounds that a solid waste landfill at that location could contaminate an important ''sole source'' aquifer, and on the grounds that environmentally safer practicable alternatives were available to handle the region's solid waste. When the permit applicant sued, the District Court upheld the Corps' permit denial, but the Ninth Circuit Court of Appeals reversed, on a number of grounds.

One of the Ninth Circuit's conclusions in the RII decision was that the ''primary purpose'' test in the Corps'' definition of the term ''fill material'' meant that the Corps could not require a CWA section 404 permit for pollutants that the applicant proposed to discharge into waters of the U.S. relating to his proposed landfill. Based on the Corps' definition of fill material, the Ninth Circuit stated that no section 404 permit was needed for the solid waste that would be disposed of in the proposed landfill. Moreover, the Ninth Circuit also determined that the layers of gravel, low permeability soil, and synthetic liner that would underlie the solid waste landfill did not constitute fill material. The Court reasoned that the ''primary purpose'' of these materials (*e.g.,* soil and gravel) to be placed in the waters of the U.S. to underlie the landfill was not ''changing the bottom elevation of a water body'' or ''replacing an aquatic area with dry land.'' Rather, the court found that its primary purpose was the installation of a leak detection and collection system for that landfill. The court did not address the material that would be used to construct roads and berms that were part of the project.

The Ninth Circuit's decision in the RII case illustrates the inherent problems in the ''primary purpose'' test. In RII, the litigant was successful in excluding from regulation under the CWA section 404 traditional fill material, by alleging an alternative primary purpose. Typically fill serves some purpose other than just creating dry land or changing a water body's bottom elevation. Thus, if this approach to interpreting the Corps' ''primary purpose test'' were to be taken to its extreme conclusion, the unreasonable end result could be that almost any traditional fill material proposed to be placed in waters of the U.S. does not need a section 404 permit. Such an interpretation would be clearly contrary to the intent of Congress expressed in the plain words of CWA sections 404 and 301, which require that any ''fill material'' to be placed in any water of the U.S. must be legally authorized by a permit under CWA section 404.

These problems can be avoided by focusing on the effect of the material to be discharged rather than the purpose. For example, in the decision of the Fifth Circuit Court of Appeals in *Avoyelles Sportsmens League* v. *Marsh,* 715 F. 2d. 897 (5th Cir. 1983), the Court effectively interpreted the ''primary purpose test'' as an ''effects based'' definition of ''fill material.'' In the words of the Fifth Circuit:

* * * the burying of the unburned material, as well as the discing, had the *effect* of filling in the sloughs on the tract and leveling the land. The landowners insist that any leveling was ''incidental'' to their clearing activities and therefore, the material was not deposited for the ''primary purpose'' of changing the character of the land. The district court found, however, that there had been significant leveling * * * Certainly, the activities were designed to ''replace the aquatic area with dry land.'' Accordingly, we hold that the district court correctly concluded that the landowners were discharging ''fill material'' into the wetlands. (Id. At 924–925; emphasis added).

Thus, in the Avoyelles decision the Fifth Circuit essentially held that if the effect of material discharged into waters of the U.S. is fill, then that material properly is treated as fill material needing a CWA section 404 permit.

Other litigation which reflects the confusion caused by the ambiguities of the ''primary purpose test'' originated in the District Court for the Southern District of West Virginia (*Bragg* v. *Robertson,* (Civil Action No. 2:98–636, S. D. W. Va.)) and currently is the subject of an appeal to the U.S. Court of Appeals for the Fourth Circuit. The Bragg case involves the discharge of large volumes of rock, sand, and earth (*i.e.,* surface mining overburden) into waters in West Virginia as part of the process of ''mountaintop removal'' surface coal mining. The Corps has historically regulated this type of discharge, commonly known as ''valley fills,'' under CWA section 404 general and individual permits (permits under the Surface Mining Control and Reclamation Act (SMCRA) are also required). Among several claims in Bragg was the assertion that this rock and soil overburden should be regulated under CWA section 402. On December 23, 1998, a settlement agreement was reached among the federal defendants, West Virginia Department of Environmental Protection and the plaintiffs to resolve all claims against the federal defendants. Under the settlement agreement, the plaintiffs agreed not to challenge Corps' authority to regulate as ''fill material'' under CWA Section 404 various types of material (e.g., rock, sand, and earth) generated by the coal mining industry in West Virginia and placed in waters of the U.S. On June 17, 1999, the District Court approved the agreement, finding that the agreement ''accords with the law and is fair, reasonable and faithful to the objectives of SMCRA and CWA.'' 54 F.Supp.2d 653, 665 (S.D.W.Va. 1999). However, an October 1999 Memorandum Opinion and Order by the District Court addressing claims against the West Virginia Department of Environmental Protection under SMCRA contains obiter dicta, based upon the Corps' primary purpose test, indicating that the Corps lacked authority to regulate under CWA section 404 the placement into waters of the U.S. of rock, sand, and earth overburden from coal surface mining operations, because the ''primary purpose'' of the discharge was waste disposal.

In contrast to the use of a ''primary purpose test,'' the EPA regulations currently define ''fill material'' as ''* * * any 'pollutant' which replaces portions of the 'waters of the United States' with dry land or which changes the bottom elevation of a water body for any purpose'' (emphasis added). This approach, which focuses on whether the material would have the effect of replacing portions of waters of the U.S. with dry land, or of changing the bottom elevation of such waters, is less ambiguous and subjective than use of a ''primary purpose test.'' However, we believe that this definition needs clarification, because, read literally, it could subject to regulation under CWA section 404 certain pollutants that have been, are being, and should be regulated by the technology and water quality based standards used in the section 402 program. For example, industrial waste or sewage may contain suspended solids which ultimately will settle to the bottom following discharge. Although this would not replace waters with dry land, this could have effects on the water body's bottom elevation. Where such pollutants are covered by proposed or final effluent limitations guidelines and standards under section 301, 304, or 306 of the CWA or the discharge is covered by a NPDES permit issued under section 402 of the CWA, the proposed rule would exclude the discharge from the definition of fill.

## II. Discussion of Proposed Rule

In order to ensure a clear, effective, and consistent regulatory approach, the Corps and EPA today are proposing identical definitions of the term ''fill material.'' In particular, we believe that regardless of the purpose of a prospective discharge, the definition of ''fill material'' should cover material that has the effect of fill.

Accordingly, today's proposal would amend both the Corps' definition of ''fill material'' at 33 CFR 323.2(e) and the EPA's definition at 40 CFR 232.2 to provide that ''fill material'' means material that has the effect of replacing any portion of a water of the U.S. with dry land, or changing the bottom elevation of any portion of a water of the U.S. At the same time, it would specifically exclude from the definition of fill material discharges subject to EPA proposed or promulgated effluent limitation guidelines and standards under CWA sections 301, 304, and 306, or discharges covered by a NPDES permit issued under CWA section 402.

In the revised definition of ''fill material'' we have included examples of certain types of material that often constitute fill. We wish to emphasize that these are illustrative clarifying examples and are not intended to be an exhaustive list. As today's rule formally adopts the effects test, it also is important that we clarify our intent with respect to certain materials not specifically listed within the definition. The materials include wood chips, coal mining overburden, certain forms of solid waste, and material used to construct solid waste landfills.

With respect to ''wood chips,'' when this material is scattered as a result of the normal use of wood cutting equipment such as chainsaws, bush hogs, and similar equipment, the wood chips would not have the effect of fill, and thus would not be covered by CWA section 404 under today's proposal. However, some operators of heavy mechanized equipment place or stockpile wood chips in wetlands to use as temporary road material, equipment pads, or surfacing to facilitate operation of equipment such as trucks, backhoes, and excavation equipment. In addition, in some cases the regular operation of chipping equipment can result in stockpiling or mounding of chips in waters of the U.S. In situations such as these, because of their quantity or distribution, the woodchips have the effect of fill and would be subject to regulation under CWA section 404.

With regard to proposed discharges of coal mining overburden, we believe that the placement of such material into waters of the U.S. has the effect of fill and therefore, should be regulated under CWA section 404. This approach is consistent with existing practice and the existing EPA definition of the term ''fill material.'' In Appalachia in particular, such discharges typically result in the placement of rock and other material in the heads of valleys, with a sedimentation pond located downstream of this ''valley fill.'' This has required authorization under CWA section 404 for the discharges of fill material into waters of the U.S., including the overburden and coal refuse, as well as the berms, or dams, associated with the sedimentation ponds. The effect of these discharges is to replace portions of a water body with dry land. Therefore, today's proposal makes clear that such material is to be regulated under CWA section 404. Also,

today's proposal recognizes that discharges from coal mining activities that are covered by a proposed or final EPA effluent guideline (See e.g., 40 CFR part 434) are not fill material and would remain subject to regulation under CWA section 402. Thus, the effluent discharged into waters of the U.S. from sedimentation ponds currently is regulated under CWA section 402, and would continue to be so regulated under today's proposal. This result would also be true for other types of activities that involve various discharges, some of which are subject to regulation under CWA section 404 and others of which are subject to regulation under section 402.

In proposing today's rule, it is the intent of the Corps and EPA to ensure that all activities involving discharge of pollutants into the waters of the U.S. associated with coal mining be regulated effectively to ensure protection of the aquatic environment. Consistent with the terms of the 1998 Bragg settlement agreement a Memorandum of Understanding (MOU) to coordinate coal mining permit evaluations in the state was entered into by the Office of Surface Mining, the Fish and Wildlife Service, EPA, the Corps, and the State of West Virginia. Completed in April 1999, the MOU describes those discharges that the agencies believe generally should have only a minimal effect on waters of the U.S. and thus could be eligible for general permit authorization by the Corps. Prior to that MOU, agency practice had allowed the authorization of some discharges that probably should have received individual permit review. In addition, the MOU initiated coordination procedures between CWA and Surface Mining Control and Reclamation Act permit reviews that also has resulted in the development of technical models for minimizing the size of proposed coal discharges. The settlement agreement included the initiation of a comprehensive Environmental Impact Statement (EIS) as well. The EIS is scheduled to be completed in December 2000 and will assess current federal and state authorities for regulating coal mining discharges in Appalachia and what measures may be necessary to ensure protection of human health and the environment. A draft EIS will be issued this summer for public comment.

With respect to solid waste, it is important at the outset to draw a clear distinction between solid waste discharged directly into waters of the U.S. and sanitary solid waste landfills (the latter is discussed further below). Under today's proposed rule, many forms of solid waste (including heterogeneous solid waste such as garbage) could fall within the definition of ''fill material'' if such waste were to be placed directly into waters of the U.S. This is because most forms of solid waste, if discharged into a water body, would have the effect of changing the bottom elevation of a portion of an aquatic area, or replacing a portion of the aquatic area with dry land.

Under today's proposal, the only exception would be for those discharges covered by proposed or final effluent limitation guidelines and standards under sections 301, 304, or section 306 of the CWA or an NPDES permit issued under section 402 of the CWA. Generally, under these provisions of the CWA, EPA regulates solid waste materials that are of a homogeneous nature normally resulting from a single-industry site or set of known processes. For example, such wastes as identified in 40 CFR part 440, subpart M (placer mining), 40 CFR part 436, subpart R (phosphate mining), 40 CFR part 440, subpart E (titanium mining), 40 CFR part 436, subpart C (sand and gravel mining), 40 CFR part 423 (steam electric power generation), and 40 CFR part 435 (oil and gas extraction). We welcome comment on all aspects of today's proposal, and especially solicit comment on whether the proposal's reference to discharges ''covered by proposed or final effluent limitations guidelines and standards under sections 301, 304 or section 306 of the Clean Water Act * * * or discharges covered by an NPDES permit'' fully encompasses the range of discharges properly subject to section 402 of the Act.

Notwithstanding the fact that the definition of fill could include many forms of solid waste, you should not infer from this fact that either the Corps or the EPA believes that solid waste (e.g., trash, debris, automobiles) is an appropriate or legitimate form of fill material for which CWA section 404 permits should be or will be granted. In fact, the opposite is true. As a general matter, we do not expect that CWA section 404 authorizations should be, or are likely to be, granted for proposals to discharge of fill material consisting of such solid waste into any water of the U.S.

In this regard, for many years the Corps has advised the regulated public that, as a general rule, such solid waste is not an acceptable form of fill material for which CWA section 404 permits can be issued. For example, all Corps Nationwide General Permits are subject to General Condition Number 3, which reads as follows:

3. *Suitable material.* No discharge of dredged or fill material may consist of unsuitable material (e.g., trash, debris, car bodies, etc.) and material discharged must be free from toxic pollutants in toxic amounts (see section 307 of the Clean Water Act.) (56 FR 59146, Nov. 22, 1991)

In the most recent revision of the nationwide general permit conditions, the list of ''unsuitable'' forms of fill material has been expanded to include ''asphalt.'' (See 65 FR Page 12896, March 9, 2000).

This general condition reflects the policy that the waters of the U.S. should not be polluted by discharges of solid waste, which is generally not a suitable or appropriate form of ''fill material,'' for a variety of reasons. For example, many forms of solid waste, such as heterogeneous solid waste, junked automobiles, discarded appliances, or chemically processed solid waste (e.g., heap leach piles) often contain pollutants (including toxic pollutants) that could, over time, leach into and contaminate both the surface waters and ground water. Consequently, as a general rule, members of the public should not seek CWA section 404 authorization for the discharge of such solid waste directly into the waters of the U.S., because there is no likelihood that section 404 permits would be granted.

Where there is no reasonable prospect that a Corps District Engineer would grant a section 404 permit to discharge solid waste into a water body, it would be a waste of time for both the applicant and the Corps for the Corps to have to accept and process a permit application for such a proposed discharge. Thus, the Corps is considering including in its regulation a provision that would allow the District Engineer complete discretion to refuse to process any permit application to discharge fill material that the District Engineer determines to be ''unsuitable fill material.'' This would allow Corps District offices to avoid expending limited resources processing applications for the direct discharge into waters of the U.S. of any form of solid waste where the District Engineer determines that there is no reasonable possibility for the granting of a section 404 permit.

To accomplish this purpose, the Corps could include within its regulations at 33 CFR 323.2 a definition for a new term, ''unsuitable fill material.'' That proposed new definition would read generally as follows:

The term ''unsuitable fill material'' means any material proposed to be discharged into waters of the United States that would fall under the definition of ''fill material,'' but

which the District Engineer determines to have physical or chemical characteristics that would make the material unsuitable for a proposed discharge into waters of the United States, so that there is no reasonable possibility that a section 404 permit can be granted for the proposed discharge of that particular material. For example the District Engineer may determine that fill material is unsuitable because of the potential for the leaching of contaminants from the fill material into ground waters or surface waters, or because the proposed fill material is too light or unstable to serve reliably for its intended purpose (e.g., bank stabilization or erosion control). In most circumstances, heterogeneous solid waste, discarded appliances, and automobile or truck bodies would qualify as unsuitable fill material. In addition, material containing toxic pollutants in toxic amounts (see section 307 of the Clean Water Act) is unsuitable fill material.

The Corps recognizes the fact that special and exceptional circumstances can arise whereby material generally deemed ''unsuitable'' for direct discharge into water bodies can be authorized for discharge, with little or no risk to the environment, or even to enhance environmental values. For example, over the years the Corps has authorized the creation of a number of artificial reefs from various types of discarded ''waste materials.'' Therefore, the new definition of ''unsuitable fill material'' would not reduce in any way the discretion of any District Engineer to authorize the discharge of any waste material for a beneficial purpose.

Accordingly, we request comment on adding a definition in the Corps regulations for the term ''unsuitable fill material,'' and on changing Corps regulations to grant the District Engineer authority to reject, without further processing, any permit application for ''fill material'' that the District Engineer determines to be ''unsuitable fill material.''

Unfortunately, it is well known that, upon occasion and from time to time, individuals illegally ''dump'' solid waste into wetlands and other aquatic areas, without having sought any sort of CWA authorization for those discharges. Such illegal discharges of solid waste present an enforcement problem under the CWA. The EPA will continue to serve as the lead enforcement agency regarding such unpermitted discharges of solid waste.

With respect to solid waste landfills, our intent has been, and continues to be, that liners, berms, and other infrastructure that are constructed of materials such as rock, sand, gravel, clay, soil, plastics, and other materials that have the effect of changing the elevation of waters of the U.S. should be regulated under section 404 of the CWA. In the case of a landfill that has received an individual Department of the Army section 404 permit, the subsequent disposal of solid waste into the landfill, while subject to regulation under the Resource Conservation and Recovery Act (RCRA), would not be subject to regulation under the CWA. As with current practice, discharges of leachate from landfills into waters of the U.S. would remain subject to CWA section 402.

Our approach today is consistent with current practice and the 1986 Solid Waste MOA between the EPA and the Army that the agencies have continued to follow in implementing our current regulations. That MOA sets out a number of factors in paragraphs 4 and 5 to help determine whether material is subject to the CWA under 404 or 402, and today's proposal has been drafted to take into account factors similar to those in the 1986 Solid Waste MOA. In particular, the proposal's provision that material with the effect of fill would be subject to section 404 is similar to paragraph B.4.c of the 1986 Solid Waste MOA (providing that when the principal effect of the discharge is physical loss or modification of waters of the U.S., this is a factor indicating application of section 404). Similarly, proposed language excluding from coverage under section 404 material that is covered by proposed or promulgated EPA effluent guidelines or standards is consistent with paragraph B.5 of the 1986 Solid Waste MOA (providing that when discharges are in liquid, semi-liquid, or suspended form or the discharge is of homogeneous solid material, this is a factor indicating application of section 402). Additionally, as provided for in paragraph B.2 of the 1986 Solid Waste MOA, in cases of unpermitted discharges of solid waste into waters of the U.S., EPA will continue to serve as the lead enforcement agency.

Consistent with the above described revisions to the definition of ''fill material,'' we also are proposing to revise the definition of the term ''discharge of fill material'' to further clarify the issue of section 404 applicability with regard to materials used to construct solid waste landfills and placement of coal mining overburden. In particular, we believe placement of these materials in waters of the U.S. is properly subject to regulation under section 404 of the CWA. Accordingly, we are proposing a clarification to the regulations on this point by adding these placement activities to the list of examples set out in the regulations defining the ''discharge of fill material'' at 33 CFR 323.2(f) and 40 CFR 232.2.

## III. Administrative Requirements

### *A. Paperwork Reduction Act*

This action does not impose any new information collection burden or alter or establish new record keeping or reporting requirements. Thus, this action is not subject to the Paperwork Reduction Act.

### *B. Executive Order 12866*

Under Executive Order 12866 (58 FR 51735, October 4, 1993), we must determine whether the regulatory action is ''significant'' and therefore subject to review by the Office of Management and Budget (OMB) and the requirements of the Executive Order. The Order defines ''significant regulatory action'' as one that is likely to result in a rule that may:

(1) Have an annual effect on the economy of $100 million or more, or adversely affect in a material way the economy, a sector of the economy, productivity, competition, jobs, the environment, public health or safety, or State, local, or Tribal governments or communities;

(2) Create a serious inconsistency or otherwise interfere with an action taken or planned by another agency;

(3) Materially alter the budgetary impact of entitlements, grants, user fees, or loan programs or the rights and obligations of recipients thereof; or

(4) Raise novel legal or policy issues arising out of legal mandates, the President's priorities, or the principles set forth in the Executive Order.

Pursuant to the terms of Executive Order 12866, it has been determined that this rule is a ''significant regulatory action.'' As such, this action was submitted to OMB for review. Changes made in response to OMB suggestions or recommendations will be documented in the public record.

### *C. Executive Order 13132 (Federalism)*

Executive Order 13132, entitled ''Federalism'' (64 FR 43255, August 10, 1999), requires us to develop an accountable process to ensure ''meaningful and timely input by State and local officials in the development of regulatory policies that have federalism implications.'' ''Policies that have federalism implications'' is defined in the Executive Order to include regulations that have ''substantial direct effects on the States, on the relationship between the national government and the States, or on the distribution of power and responsibilities among the various levels of government.''

Under section 6 of Executive Order 13132, we may not issue a regulation

that has federalism implications, that imposes substantial direct compliance costs, and that is not required by statute, unless the Federal government provides the funds necessary to pay the direct compliance costs incurred by State and local governments, or we consult with State and local officials early in the process of developing the proposed regulation. We also may not issue a regulation that has federalism implications and that preempts State law, unless the Agency consults with State and local officials early in the process of developing the proposed regulation.

This proposed rule does not have federalism implications. It will not have substantial direct effects on the States, on the relationship between the national government and the States, or on the distribution of power and responsibilities among the various levels of government, as specified in Executive Order 13132. Currently, under the CWA, any discharge of pollutants into waters of the U.S. requires a permit. Today's proposal relates solely to whether a particular discharge is appropriately authorized under section 402 or section 404 of the Act. Moreover, the proposed allocation of authority between these programs is consistent with existing agency practice. Thus, the requirements of section 6 of the Executive Order do not apply to this rule.

*D. Regulatory Flexibility Act (RFA) as Amended by the Small Business Regulatory Enforcement Fairness Act of 1996 (SBREFA), 5 U.S.C. 601 et seq.*

The RFA generally requires an agency to prepare a regulatory flexibility analysis of any rule subject to notice and comment rulemaking requirements under the Administrative Procedure Act or any other statute unless the agency certifies that the rule will not have a significant economic impact on a substantial number of small entities. Small entities include small businesses, small organizations and small governmental jurisdictions.

The proposed rule does not impose any new requirements. Currently, under the CWA, any discharge of pollutants into waters of the U.S. requires a permit. Today's proposal relates solely to whether a particular discharge is appropriately authorized under section 402 or section 404 of the Act. Moreover, the proposed allocation of authority between these programs is consistent with existing agency practice. After considering the economic impacts of today's proposed rule on small entities, we certify that this action will not have a significant economic impact on a substantial number of small entities.

*E. Unfunded Mandates Reform Act*

Title II of the Unfunded Mandates Reform Act of 1995 (UMRA), Public Law 104–4, establishes requirements for Federal agencies to assess the effects of their regulatory actions on State, local, and Tribal governments and the private sector. Under section 202 of the UMRA, EPA generally must prepare a written statement, including a cost-benefit analysis, for proposed and final rules with ''Federal mandates'' that may result in expenditures to State, local, and Tribal governments, in the aggregate, or to the private sector, of $100 million or more in any one year. Before promulgating an EPA rule for which a written statement is needed, section 205 of the UMRA generally requires EPA to identify and consider a reasonable number of regulatory alternatives and adopt the least costly, most cost-effective or least burdensome alternative that achieves the objectives of the rule. The provisions of section 205 do not apply when they are inconsistent with applicable law. Moreover, section 205 allows EPA to adopt an alternative other than the least costly, most cost-effective or least burdensome alternative if the Administrator publishes with the final rule an explanation why that alternative was not adopted. Before EPA establishes any regulatory requirements that may significantly or uniquely affect small governments, including Tribal governments, it must have developed under section 203 of the UMRA a small government agency plan. The plan must provide for notifying potentially affected small governments, enabling officials of affected small governments to have meaningful and timely input in the development of EPA regulatory proposals with significant Federal intergovernmental mandates, and informing, educating, and advising small governments on compliance with the regulatory requirements.

We have determined that this rule does not contain a Federal mandate that may result in expenditures of $100 million or more for State, local, and Tribal governments, in the aggregate, or the private sector in any one year. The proposed rule does not impose any new requirements. Currently, under the CWA, any discharge of pollutants into waters of the U.S. requires a permit. Today's proposal relates solely to whether a particular discharge is appropriately authorized under section 402 or section 404 of the Act. Moreover, the proposed allocation of authority between these programs is consistent with existing agency practice. Thus, today's rule is not subject to the requirements of sections 202 and 205 of the UMRA. For the same reasons, we have determined that this rule contains no regulatory requirements that might significantly or uniquely affect small governments. Thus, today's rule is not subject to the requirements of section 203 of UMRA.

*F. National Technology Transfer and Advancement Act*

Section 12(d) of the National Technology Transfer and Advancement Act of 1995 (the NTTAA), Public Law 104–113, section 12(d) (15 U.S.C. 272 note), directs us to use voluntary consensus standards in our regulatory activities unless to do so would be inconsistent with applicable law or otherwise impractical. Voluntary consensus standards are technical standards (e.g., materials specifications, test methods, sampling procedures, and business practices etc.) that are adopted by one or more voluntary consensus standards bodies. The NTTAA directs us to provide Congress, through OMB, explanations when we decide not to use available and applicable voluntary consensus standards.

As part of a larger effort, EPA is undertaking a project to cross-reference existing voluntary consensus standards in testing, sampling, and analysis, with current and future EPA test methods. When completed, EPA will use this project to assist in identifying potentially applicable voluntary consensus standards that can then be evaluated for equivalency and applicability in determining compliance with future EPA regulations.

This proposed rulemaking does not involve technical standards. Therefore, we are not considering the use of any voluntary consensus standards. We welcome comments on this aspect of the proposed rulemaking and specifically, invite the public to identify any potentially applicable voluntary consensus standards and to explain why such standards should be used in this regulation.

*G. Executive Order 13045*

Executive Order 13045, entitled Protection of Children From Environmental Health Risks and Safety Risks (62 FR 19885, April 23, 1997), applies to any rule that we determine (1) is economically significant as defined under Executive Order 12866, and (2) concerns an environmental health or safety risk that we believe may have a disproportionate effect on children. If the regulatory action meets both criteria, we must evaluate the environmental

health or safety effects of the planned rule on children and explain why the planned regulation is preferable to other potentially effective and reasonably feasible alternatives that we considered.

This regulation is not subject to Executive Order 13045 because, as previously discussed, it does not constitute an economically significant regulatory action as defined by Executive Order 12866. Furthermore, it does not concern an environmental health or safety risk that we have reason to believe may have a disproportionate effect on children.

*H. Executive Order 13084*

Under Executive Order 13084, we may not issue a regulation that is not required by statute, that significantly or uniquely affects the communities of Indian Tribal governments, and that imposes substantial direct compliance costs on those communities, unless the Federal government provides the funds necessary to pay the direct compliance cost incurred by the Tribal governments, or we consult with those governments. If we comply by consulting, Executive Order 13084 requires us to provide OMB, in a separately identified section of the preamble to the rule, a description of the extent of our prior consultation with representatives of affected Tribal governments, a summary of the nature of their concerns, and a statement supporting the need to issue the regulation. In addition, Executive Order 13084 requires us to develop an effective process permitting elected officials and other representatives of Indian Tribal governments ''to provide meaningful and timely input in the development of regulatory policies on matters that significantly or uniquely affect their communities.''

Today's rule does not significantly or uniquely affect the communities of Indian Tribal governments, nor does it impose significant compliance costs on them. Today's proposal relates solely to whether a particular discharge is appropriately authorized under section 402 or section 404 of the Clean Water Act. Moreover, the proposed allocation of authority between these programs is consistent with existing agency practice. Accordingly, the requirements of section 3(b) of Executive Order 13084 do not apply to this rule.

*I. Environmental Documentation*

As required by the National Environmental Policy Act (NEPA), the Corps prepares appropriate environmental documentation for its activities affecting the quality of the human environment. The Corps has made a preliminary determination that today's proposed rule does not constitute a major Federal action significantly affecting the quality of the human environment, and thus does not require the preparation of an Environmental Impact Statement (EIS). Among the reasons for this conclusion is the fact that the Corps prepares appropriate NEPA documents, when required, covering specific permit situations. The implementation of the procedures prescribed in this proposed regulation would not authorize anyone (e.g., any landowner or permit applicant) to perform any work involving regulated activities in waters of the U.S. without first seeking and obtaining an appropriate permit authorization from the Corps. In addition, this proposed regulation merely revises and clarifies the Corps' and EPA's respective definitions of the terms ''fill material'' and ''discharge of fill material'' to allow more objective determinations, and is consistent with current practice. Accordingly, the Corps expects to prepare an environmental assessment (EA) for the rule.

**List of Subjects**

*33 CFR Part 323*

Water pollution control, Waterways.

*40 CFR Part 232*

Environmental protection, Intergovernmental relations, Water pollution control.

**Corps of Engineers**

*33 CFR Chapter II*

Accordingly, as set forth in the preamble 33 CFR part 323 is proposed to be amended as set forth below:

## PART 323—[AMENDED]

1. The authority citation for part 323 continues to read as follows:

**Authority:** 33 U.S.C. 1344.

2. Amend § 323.2 as follows:

a. Paragraph (e) is revised.

b. In paragraph (f), in the second sentence, add the words ''placement of *fill material* for construction or maintenance of liners, berms, and other infrastructure associated with solid waste landfills; placement of coal mining overburden;'', after the words ''utility lines;''.

The revision reads as follows:

**§ 323.2 Definitions.**

* * * * *

(e)(1) Except as specified in paragraph (e)(2) of this section, the term *fill material* means material (including but not limited to rock, sand, and earth) that has the effect of:

(i) Replacing any portion of a water of the United States with dry land; or

(ii) Changing the bottom elevation of any portion of a water of the United States.

(2) The term *fill material* does not include discharges covered by proposed or final effluent limitations guidelines and standards under sections 301, 304 or section 306 of the Clean Water Act (see generally, 40 CFR part 401), or discharges covered by an NPDES permit issued under section 402 of the Clean Water Act.

* * * * *

Dated: April 17, 2000.

**Joseph W. Westphal,**

*Assistant Secretary of the Army (Civil Works), Department of the Army.*

**Environmental Protection Agency**

40 CFR Chapter I

Accordingly, as set forth in the preamble 40 CFR part 232 is proposed to be amended as set forth below:

## PART 232—[AMENDED]

1. The authority citation for part 232 continues to read as follows:

**Authority:** 33 U.S.C. 1344.

2. Amend § 232.2 as follows:

a. The definition of ''Fill material'' is revised.

b. In the definition of ''Discharge of fill material,'' in paragraph (1), add the words ''placement of fill material for construction or maintenance of liners, berms, and other infrastructure associated with solid waste landfills; placement of coal mining overburden;'', after the words ''utility lines;''.

The revision reads as follows;

### § 232.2 Definitions.

* * * * *

*Fill material.* (1) Except as specified in paragraph (2) of this definition, the terms *fill material* means material (including but not limited to rock, sand, and earth) that has the effect of:

(i) Replacing any portion of water of the United States with dry land; or

(ii) Changing the bottom elevation of any portion of a water of the United States.

(2) The term *fill material* does not include discharges covered by proposed or final effluent limitations guidelines and standards under sections 301, 304 or section 306 of the Clean Water Act (see generally, 40 CFR part 401), or discharges covered by an NPDES permit issued under section 402 of the Clean Water Act.

* * * * *

Dated: April 17, 2000.

**Carol M. Browner,**

*Administrator, Environmental Protection Agency.*

[FR Doc. 00–9940 Filed 4–19–00; 8:45 am]

BILLING CODE 6560–50–P

# Reader Aids

**Federal Register**

Vol. 65, No. 77

Thursday, April 20, 2000

## CUSTOMER SERVICE AND INFORMATION

**Federal Register/Code of Federal Regulations**

| | |
|---|---|
| General Information, indexes and other finding aids | **202–523–5227** |
| **Laws** | **523–5227** |
| **Presidential Documents** | |
| Executive orders and proclamations | **523–5227** |
| **The United States Government Manual** | **523–5227** |
| **Other Services** | |
| Electronic and on-line services (voice) | **523–4534** |
| Privacy Act Compilation | **523–3187** |
| Public Laws Update Service (numbers, dates, etc.) | **523–6641** |
| TTY for the deaf-and-hard-of-hearing | **523–5229** |

## ELECTRONIC RESEARCH

**World Wide Web**

Full text of the daily Federal Register, CFR and other publications:

**http://www.access.gpo.gov/nara**

Federal Register information and research tools, including Public Inspection List, indexes, and links to GPO Access:

**http://www.nara.gov/fedreg**

**E-mail**

**PENS** (Public Law Electronic Notification Service) is an E-mail service for notification of recently enacted Public Laws. To subscribe, send E-mail to

**listserv@www.gsa.gov**

with the text message:

subscribe PUBLAWS-L your name

Use listserv@www.gsa.gov only to subscribe or unsubscribe to PENS. We cannot respond to specific inquiries.

**Reference questions.** Send questions and comments about the Federal Register system to:

**info@fedreg.nara.gov**

The Federal Register staff cannot interpret specific documents or regulations.

## FEDERAL REGISTER PAGES AND DATE, APRIL

17435–17582 ..... 3
17583–17754 ..... 4
17755–17986 ..... 5
17987–18220 ..... 6
18221–18870 ..... 7
18871–19292 .....10
19293–19642 .....11
19643–19818 .....12
19819–20062 .....13
20063–20332 .....14
20333–20704 .....17
20705–20892 .....18
20893–21110 .....19
21111–21300 .....20

## CFR PARTS AFFECTED DURING APRIL

At the end of each month, the Office of the Federal Register publishes separately a List of CFR Sections Affected (LSA), which lists parts and sections affected by documents published since the revision date of each title.

**3 CFR**

**Proclamations:**
7283 .....17552
7284 .....17981
7285 .....17983
7286 .....17985
7287 .....19641
7288 .....19819
7289 .....19821
7290 .....19823
7291 .....21111
7292 .....21113
7293 .....21115
7294 .....21117

**5 CFR**

Ch. LXXIII .....21239
330 .....20893
532 .....17755
550 .....19643
553 .....19643
841 .....21119
1201 .....19293
**Proposed Rules:**
1605 .....19862

**7 CFR**

6 .....20063
29 .....19825
301 .....20705
319 .....21120
932 .....19644
985 .....17756
989 .....18871
**Proposed Rules:**
6 .....20770
28 .....17609, 20852
457 .....21144
915 .....20382
984 .....17809
301 .....20770
1001 .....20094
1005 .....20094
1006 .....20094
1007 .....20094
1030 .....20094
1032 .....20094
1033 .....20094
1124 .....20094
1126 .....20094
1131 .....20094
1135 .....20094
1218 .....17612
1230 .....20862

**8 CFR**

3 .....20068
214 .....18432
245 .....20069
248 .....18432

**9 CFR**

52 .....20706
71 .....18875
80 .....18875
91 .....19294
94 .....20333, 20712, 20713
201 .....17758
**Proposed Rules:**
91 .....20383
93 .....17455
161 .....20384

**10 CFR**

39 .....20337
72 .....17552
**Proposed Rules:**
50 .....20387
63 .....20388
71 .....18010
73 .....18010

**11 CFR**

9007 .....20893
9034 .....20893
9035 .....20893
9038 .....20893
**Proposed Rules:**
101 .....19339
102 .....19339
104 .....19339
109 .....19339
114 .....19339
9003 .....19339
9033 .....19339

**12 CFR**

Ch. VI .....21128
701 .....21129
707 .....21131
910 .....20345
951 .....17435
997 .....17435
**Proposed Rules:**
560 .....17811
614 .....21151
615 .....21151
618 .....21151
915 .....17458

**13 CFR**

120 .....17439

**14 CFR**

25 .....19294
39 .....17583, 17586, 17763, 17987, 18879, 18881, 18883, 19296, 19298, 19299, 19300, 10302, 19305, 19306, 10308, 10310, 10313, 20070, 20072, 20074, 20075, 20076, 20078, 20081, 20320, 20321, 20322, 20324, 20326, 20327, 20329, 20330, 20347, 20714, 20715, 20717, 20719, 20721, 20894,

20895, 21133, 21134, 21136
71 .....17588, 17589, 19315, 19316, 19317, 19818, 19826, 19827, 19828, 20349, 29350, 20351, 20723, 20724, 20852
91.....17736
93.....17736
97 .....17990, 17991, 20896, 20898, 20901
121.....17736, 18886
135.....17736
1206.....19646
**Proposed Rules:**
23.....17613
39 .....17471, 17818, 17822, 17824, 17827, 18010, 18258, 18260, 19345, 19348, 19350, 20104, 20105, 20388, 20390, 20921, 20922, 20924, 20927, 21154, 21157, 21159
71 .....17616, 19699, 19700, 19701, 20931, 20932
158.....18932

**15 CFR**

**Proposed Rules:**
930.....20270

**16 CFR**

305.....17554, 20352
1615.....19818
1616.....19818
**Proposed Rules:**
250.....18933
423.....20108

**17 CFR**

242.....18888
**Proposed Rules:**
1.....20395
200.....20524
275.....20524
279.....20524

**18 CFR**

2.....18221
35.....18221, 18229
154.....20902
161.....20902
250.....20902
284.....20902
330.....20354
385.....18229, 20354

**19 CFR**

101.....21138
**Proposed Rules:**
134.....17473

**20 CFR**

219.....19829
220.....20371
222.....20725
325.....19647
330.....19647
335.....19647
336.....19647
404.....17994
416.....17994
**Proposed Rules:**
349.....21164

**21 CFR**

5.....19829
175.....20727
176.....20727
211.....18888
510.....20729, 20731
520.....20729, 20731
522.....20731
526.....20732
556.....20733
558.....20733
720.....18888
809.....18230
864.....18230
868.....19833
870.....19317
872.....18234
876.....18236, 19650
878.....19835, 20734
884.....19833
888.....19317
890.....19317, 19833
1301.....17552
1308.....17440, 17552
**Proposed Rules:**
10.....18934
111.....17474
201.....18934
210.....20774
211.....20774
250.....18934
290.....18934
310.....18934
329.....18934
341.....18934
361.....18934
369.....18934
606.....18934
610.....18934
820.....20774
864.....20933
866.....20933
868.....20933
870.....20933
872.....20933
874.....20933
876.....20933
878.....20933
884.....20933
886.....20933
888.....20933
1271.....20774

**22 CFR**

41.....20903
42.....20903
62.....20083

**24 CFR**

200.....17974
**Proposed Rules:**
903.....20686
1000.....21288

**25 CFR**

**Proposed Rules:**
70.....20775

**26 CFR**

**Proposed Rules:**
1 .....17829, 17835, 19702, 20403
20.....17835
25.....17835
301.....17617

**27 CFR**

**Proposed Rules:**
4.....17839
275.....17477

**28 CFR**

16.....21139
0.....20068
2.....19996
**Proposed Rules:**
2.....20006

**29 CFR**

403.....21140
1952.....20735
2520.....21068
4022.....20083
4044.....20083
**Proposed Rules:**
1910.....19702

**30 CFR**

250.....18432
913.....18237
931.....18889

**31 CFR**

Ch. 5.....17590
210.....18866, 19818
247.....20905
**Proposed Rules:**
1.....21165

**32 CFR**

318.....18894
323.....18900
326.....20372
581.....17440
**Proposed Rules:**
327.....18938

**33 CFR**

100.....21141
110.....20085
117 .....17443, 17766, 18242, 19836, 20743
162.....18242
165.....21142
**Proposed Rules:**
110.....18261
117.....18264
165.....18261
323.....21292

**34 CFR**

75.....19606
379.....18214
611.....19606
674.....18001
**Proposed Rules:**
75.....20698

**36 CFR**

51.....20630

**37 CFR**

**Proposed Rules:**
1.....17946, 18154
5.....17946
201.....17840

**38 CFR**

8.....19658
21.....18151, 20745
**Proposed Rules:**
1.....20787
21.....17477

**39 CFR**

111.....17593, 17766

**40 CFR**

9.....20304
52 .....17444, 17768, 17771, 18003, 18008, 18009, 18245, 18901, 18903, 19319, 19323, 19836, 19838, 19992, 20746, 20749, 20905, 20909, 20912, 20913
60.....18906, 20754
61.....20754
62 .....18249, 18252, 18909, 20086
63.....20754
82.....19327
93.....18911
131.....19659
141.....20314
142.....20314
180 .....17773, 19662, 19842
261.....18918
300.....18925
**Proposed Rules:**
2.....19703
9.....20314
52 .....17841, 18014, 18266, 18947, 19353, 19864, 19865, 19964, 20404, 20421, 20423, 20426, 20788, 20789
62 .....18266, 18956, 20109
63.....19152
141 .....17842, 19046, 20314
142 .....17842, 19046, 20314
194.....20109
232.....21292
258.....18014
261.....20934
300.....18956
434.....19440
435.....20789
761.....18018

**41 CFR**

**Proposed Rules:**
101-44.....20014
102-37.....20014

**42 CFR**

409.....18434
410.....18434, 19330
411.....18434, 19330
412.....18434
413.....18434
414.....19330
415.....19330
419.....18434
424.....18434
485.....19330
489.....18434
498.....18434
1003.....18434

**44 CFR**

64.....20090
65.....19664, 19666
67.....19669
**Proposed Rules:**
67.....19710

**45 CFR**

**Proposed Rules:**
60.....20428

**46 CFR**

**Proposed Rules:**
310 ....18957
401 ....20110

**47 CFR**

1 ....19818
20 ....19818
22 ....17445
24 ....18255
27 ....17594
43 ....18926, 19818
51 ....19335
52 ....18256
64 ....18255
73 ....17607, 17775, 19336, 20380, 20760, 20915
101 ....17445

**Proposed Rules:**
1 ....19580
43 ....19725
73 ....17617, 17618, 17619, 20790, 20791, 20935, 20936

**48 CFR**

213 ....19849
225 ....19849
226 ....19858
235 ....19859
241 ....19818
242 ....19849
252 ....19849, 19859

**Proposed Rules:**
15 ....17582
30 ....20854
52 ....20854
204 ....19865, 19866
252 ....19866
1827 ....20791
1835 ....20791
1852 ....20791

**49 CFR**

209 ....20380
230 ....20380
533 ....17776

**Proposed Rules:**
195 ....18020
544 ....18267
567 ....20936
568 ....20936
571 ....17842
1180 ....18021

**50 CFR**

17 ....17779, 19686, 20760
224 ....20915
226 ....17786, 20915
300 ....17805
600 ....17805
635 ....19860, 20092, 20918
660 ....17805, 17807
679 ....17808, 18257, 19338, 20919

**Proposed Rules:**
17 ....18026, 19728, 20120, 20123, 20792, 20938
21 ....20125
223 ....17852
600 ....18270, 18271
622 ....20428, 20939
635 ....18960
648 ....18270, 18271, 20940
660 ....19734
679 ....18028, 19354

## REMINDERS

The items in this list were editorially compiled as an aid to Federal Register users. Inclusion or exclusion from this list has no legal significance.

## RULES GOING INTO EFFECT APRIL 20, 2000

**INTERIOR DEPARTMENT**

**National Park Service**

National Park System:

Personal watercraft use; published 3-21-00

**JUSTICE DEPARTMENT**

Privacy Act; implementation; published 4-20-00

**PERSONNEL MANAGEMENT OFFICE**

Retirement:

Federal Employees Retirement System (FERS)—

Intra-agency transfer; automation and simplification of employee records; published 4-20-00

**TRANSPORTATION DEPARTMENT**

**Federal Aviation Administration**

Airworthiness directives:

McDonnell Douglas; published 4-5-00

Various transport category airplanes equipped with mode ''C'' transponder(s) with single gillham code altitude input; published 4-20-00

Class D airspace; published 1-18-00

Class D and Class E airspace; published 2-7-00

Class E airspace; published 12-6-99

Class E airspace; correction; published 3-2-00

Federal airways; published 2-18-00

Federal airways; correction; published 4-12-00

IFR altitudes; published 3-17-00

Jet routes; published 3-10-00

Restricted areas; published 2-25-00

**TRANSPORTATION DEPARTMENT**

**Federal Motor Carrier Safety Administration**

Motor carrier safety standards:

Transportation Equity Act for 21st Century; implementation—

Commercial Motor Carrier Saftey Assistance Program; State responsibility; published 3-21-00

**TREASURY DEPARTMENT**

**Customs Service**

Organization and functions; field organization, ports of entry, etc.:

Gramercy, LA; port of entry boundary discription; published 4-20-00

## COMMENTS DUE NEXT WEEK

**ADMINISTRATIVE COMMITTEE OF THE FEDERAL REGISTER**

**Federal Register, Administrative Committee**

Federal Register publications; prices, availability and official status; comments due by 4-24-00; published 2-23-00

**AGRICULTURE DEPARTMENT**

**Agricultural Marketing Service**

Honey research, promotion, and consumer information order; comments due by 4-28-00; published 2-28-00

Spearmint oil produced in—

Far West; comments due by 4-24-00; published 3-24-00

**AGRICULTURE DEPARTMENT**

**Animal and Plant Health Inspection Service**

Plant-related quarantine, domestic:

Melon fruit fly; comments due by 4-24-00; published 2-22-00

**AGRICULTURE DEPARTMENT**

Supplemental standards of ethical conduct for Agriculture Department employees; comments due by 4-24-00; published 3-24-00

Correction; comments due by 4-24-00; published 4-20-00

**COMMERCE DEPARTMENT**

Electronic commerce; laws or regulations posing barriers; comments due by 4-24-00; published 3-24-00

**COMMERCE DEPARTMENT**

**National Oceanic and Atmospheric Administration**

Fishery conservation and management:

Magnuson-Stevens Act provisions—

Domestic fisheries; exempted fishing permits for experimental fishing; comments due by 4-24-00; published 4-7-00

Domestic fisheries; exempted fishing permits for experimental fishing; comments due by 4-24-00; published 4-7-00

**EDUCATION DEPARTMENT**

Special education and rehabilitative services:

State Vocational Rehabilitative Services Program; comments due by 4-28-00; published 2-28-00

**ENVIRONMENTAL PROTECTION AGENCY**

Air programs:

Tier 2/gasoline sulfur refinery projects; BACT and LAER guidance; comments due by 4-27-00; published 3-28-00

Air programs; approval and promulgation; State plans for designated facilities and pollutants:

Idaho; comments due by 4-27-00; published 3-28-00

Indiana; comments due by 4-27-00; published 3-28-00

Air quality implementation plans; approval and promulgation; various States:

California; comments due by 4-24-00; published 3-24-00

Hazardous waste program authorizations:

Oklahoma; comments due by 4-28-00; published 3-29-00

Pesticide programs:

Pesticides and ground water strategy; State management plan regulation; metolachlor and S-metalachlor equivalency; comments due by 4-24-00; published 3-24-00

Solid wastes:

Municipal solid waste landfill permit programs; adequacy determinations—

Tennessee; comments due by 4-24-00; published 2-23-00

**FEDERAL COMMUNICATIONS COMMISSION**

Common carrier services:

Transfer of 4.9 GHz bank from Federal Government Use to private sector use; comments due by 4-26-00; published 3-16-00

Practice and procedure:

Regulatory fees (2000 FY); assessment and collection; comments due by 4-24-00; published 4-11-00

Radio stations; table of assignments:

Wisconsin and Minnesota; comments due by 4-24-00; published 3-13-00

**FEDERAL ELECTION COMMISSION**

Administrative fines:

Reporting requirements; civil money penalties; comments due by 4-28-00; published 3-29-00

**FEDERAL TRADE COMMISSION**

Smokeless Tobacco Health Education Act (1996); implementation; comments due by 4-24-00; published 3-7-00

Telemarketing sales rule; comments due by 4-27-00; published 2-28-00

**GENERAL SERVICES ADMINISTRATION**

Federal Management Regulation:

Transportation—

Transportation management; comments due by 4-28-00; published 2-28-00

**GOVERNMENT ETHICS OFFICE**

Government ethics:

Decennial census; financial interests of non-federal government employees; exemption; comments due by 4-28-00; published 3-29-00

**HEALTH AND HUMAN SERVICES DEPARTMENT**

**Children and Families Administration**

Assets for Independence Demonstration Program; individual development accounts for low income individuals and families; comments due by 4-25-00; published 2-25-00

**HEALTH AND HUMAN SERVICES DEPARTMENT**

**Food and Drug Administration**

Food additives:

Paper and paperboard components—

Hydroxymethyl-5,5-dimethylhydantoin and

1,3-bis(hydroxymethyl)-5,5-dimethylhydantoin; comments due by 4-28-00; published 3-29-00

Food for human consumption:

Food labeling—

Dietary supplements; safety issues associated with use during pregnancy; public meeting; comments due by 4-24-00; published 2-24-00

Dietary supplements; safety issues associated with use during pregnancy; public meeting; correction; comments due by 4-24-00; published 2-28-00

Human drugs:

Antibiotic drugs; marketing exclusivity and patent provisions; comments due by 4-24-00; published 1-24-00

**HEALTH AND HUMAN SERVICES DEPARTMENT**

**Health Care Financing Administration**

Medicare:

Rural health clinics—

Participation requirements, payment provisions, and quality assessment and performance improvement program establishment; comments due by 4-28-00; published 2-28-00

**HOUSING AND URBAN DEVELOPMENT DEPARTMENT**

Mortgage and loan insurance programs:

Multifamiliy Reform Act; implementation; comments due by 4-24-00; published 2-23-00

**LABOR DEPARTMENT**

**Occupational Safety and Health Administration**

Safety and health standards, etc.:

Indoor air quality; occupational exposure to environmental tobacco smoke; comments due by 4-28-00; published 0-0- 0

**NUCLEAR REGULATORY COMMISSION**

Fee schedules revision; 100% fee recovery (2000 FY); comments due by 4-26-00; published 3-27-00

Rulemaking petitions:

Westinghouse Electric Co. LLC; comments due by 4-24-00; published 2-8-00

**PERSONNEL MANAGEMENT OFFICE**

Prevailing rate systems; comments due by 4-24-00; published 3-23-00

**SECURITIES AND EXCHANGE COMMISSION**

Securities:

Selective disclosure and insider trading; comments due by 4-28-00; published 3-27-00

**TRANSPORTATION DEPARTMENT**

**Coast Guard**

Ports and waterways safety:

Strait of Juan de Fuca and adjacent waters, WA; comments due by 4-24-00; published 2-23-00

Regattas and marine parades:

OPSAIL 2000, San Juan, PR; comments due by 4-28-00; published 3-29-00

**TRANSPORTATION DEPARTMENT**

**Federal Aviation Administration**

Air traffic operating and flight rules, etc.:

Special visual flight rules; comments due by 4-24-00; published 3-24-00

Airworthiness directives:

Airbus; comments due by 4-26-00; published 3-27-00

Bell; comments due by 4-28-00; published 2-28-00

Boeing; comments due by 4-24-00; published 2-24-00

Eurocopter France; comments due by 4-24-00; published 2-23-00

General Electric Co.; comments due by 4-24-00; published 2-23-00

Hoffmann Propeller Co.; comments due by 4-24-00; published 2-23-00

Honeywell International Inc.; comments due by 4-28-00; published 3-20-00

McDonnell Douglas; comments due by 4-28-00; published 2-28-00

Pratt & Whitney; comments due by 4-24-00; published 3-24-00

Rolls-Royce plc; comments due by 4-24-00; published 3-23-00

Saab; comments due by 4-26-00; published 3-27-00

Jet routes; comments due by 4-25-00; published 3-8-00

Low airspace areas; comments due by 4-24-00; published 3-14-00

**TREASURY DEPARTMENT**

**Customs Service**

Country of origin marking; comments due by 4-26-00; published 4-3-00

**TREASURY DEPARTMENT**

**Internal Revenue Service**

Employment taxes and collection of income taxes at source:

Electronically filed information returns; installation agreements due date extension; comments due by 4-26-00; published 1-27-00

Income taxes:

Partnerships; applying section 197 to amortization of intangible property; comments due by 4-24-00; published 1-25-00

Qualified transportation fringe benefits; comments due by 4-26-00; published 1-27-00

Stock transfer rules; supplemental rules; cross reference; comments due by 4-24-00; published 1-24-00

**TREASURY DEPARTMENT**

**Thrift Supervision Office**

Operations:

Government securities transfer and repurchase; comments due by 4-27-00; published 3-28-00

## LIST OF PUBLIC LAWS

This is a continuing list of public bills from the current session of Congress which have become Federal laws. It may be used in conjunction with ''P L U S'' (Public Laws Update Service) on 202–523–6641. This list is also available online at http://www.nara.gov/fedreg.

The text of laws is not published in the **Federal Register** but may be ordered in ''slip law'' (individual pamphlet) form from the Superintendent of Documents, U.S. Government Printing Office, Washington, DC 20402 (phone, 202–512–1808). The text will also be made available on the Internet from GPO Access at http://www.access.gpo.gov/nara/index.html. Some laws may not yet be available.

**H.R. 1374/P.L. 106–183**

To designate the United States Post Office building located at 680 U.S. Highway 130 in Hamilton, New Jersey, as the ''John K. Rafferty Hamilton Post Office Building''. (Apr. 13, 2000; 114 Stat. 200)

**H.R. 3189/P.L. 106–184**

To designate the United States post office located at 14071 Peyton Drive in Chino Hills, California, as the ''Joseph Ileto Post Office''. (Apr. 14, 2000; 114 Stat. 201)

**Last List April 11, 2000**

## Public Laws Electronic Notification Service (PENS)

**PENS** is a free electronic mail notification service of newly enacted public laws. To subscribe, go to www.gsa.gov/archives/publaws-l.html or send E-mail to **listserv@www.gsa.gov** with the following text message:

**SUBSCRIBE PUBLAWS-L** Your Name.

**Note:** This service is strictly for E-mail notification of new laws. The text of laws is not available through this service. **PENS** cannot respond to specific inquiries sent to this address.