Federal Register

Thursday,
July 27, 2000

Part IV

Nuclear Regulatory Commission

Revision of Management Directive for Review of 10 CFR 2.206 Petitions; Request for Comments; Notice

NUCLEAR REGULATORY COMMISSION

Revision of Management Directive for Review of 10 CFR 2.206 Petitions; Request for Comments

AGENCY: Nuclear Regulatory Commission.

ACTION: Request for comments.

SUMMARY: NRC Management Directive (MD) 8.11 describes the Nuclear Regulatory Commission's (NRC's) review process for 10 CFR 2.206 petitions. In a continuing effort to improve the review process, the NRC staff has developed process changes and a draft revision to MD 8.11. This notice invites public comment on the draft revision to MD 8.11.

DATES: The comment period ends September 1, 2000. Comments received after this date will be considered if it is practical to do so, but the staff is able to assure consideration only for those comments received on or before this date.

ADDRESSES: Mail written comments to David L. Meyer, Chief, Rules and Directives Branch, Division of Administrative Services, Office of Administration, U.S. Nuclear Regulatory Commission, Washington, DC 20555–0001. Comments may also be sent by completing the online comment form for MD 8.11 at *http://www.nrc.gov/NRC/MD/index.html.*

In addition, comments may be delivered to Room 6D59, Two White Flint North, 11555 Rockville Pike, Rockville, Maryland, between 7:30 a.m. and 4:15 p.m. Federal workdays. Copies of the draft revision to MD 8.11, the complete text of which follows this notice, are available for a fee at the NRC's Public Document Room, the Gelman Building, 2120 L Street, NW., Washington, DC. Publicly available records are accessible electronically from the ADAMS Public Library component on the NRC Web site, *http://www.nrc.gov* (the Electronic Reading Room). This notice and the draft revision to MD 8.11 are also available electronically on the Internet at *http://www.nrc.gov/NRC/MD/index.html.*

FOR FURTHER INFORMATION CONTACT: Herbert N. Berkow, Mail Stop O–8H12, Office of Nuclear Reactor Regulation, U.S. Nuclear Regulatory Commission, Washington, DC 20555–0001; telephone (301) 415–1485 and e-mail at hnb@nrc.gov.

SUPPLEMENTARY INFORMATION: The process changes to MD 8.11 were identified and developed based on the comments received from the NRC staff and members of the public. The staff requested public comments on the current revision of MD 8.11 in a **Federal Register** notice that was published on October 7, 1999 (64 FR 54654). The staff held public meetings on December 15, 1999, and February 10, 2000, to discuss potential process improvements. Based on the comments received, the staff developed three major process changes:

1. The review process, as revised in July 1999, offers petitioners an opportunity to meet with the staff's petition review board (PRB), either in person or by teleconference, before the initial PRB meeting. The purpose of this meeting is to allow the petitioner an opportunity to provide elaboration and clarification of the petition and any requests for immediate action. The staff is planning to provide an opportunity for petitioners to meet with the PRB *after* the PRB has discussed the petition, as well as before. The purpose of a meeting at this stage is to allow the petitioner to comment on the PRB's recommendations regarding whether (1) the petition meets the criteria for review under 10 CFR 2.206 and (2) any requested immediate actions will be granted. As is currently the case, the licensee would also be invited to participate.

2. The staff plans to eliminate the criteria in MD 8.11 that must be satisfied before a technical meeting can be offered during the staff's review of the petition.

3. The staff's response to a petition is a director's decision which may grant the petition, in whole or in part, or deny the petition. The staff plans to provide a copy of the proposed director's decision to the petitioner and the licensee for comments before it is issued in final form. The proposed director's decision would also be placed in the public document room. The intent of this new provision in the process is to allow the petitioner and the licensee an opportunity to review the proposed director's decision and identify any potential errors or issues that have not been addressed. The staff would then reconsider any affected portions of the proposed director's decision. Because the staff's disposition of the comments would be included in the director's decision, NRC management would have an opportunity to evaluate the staff's handling of the comments before the director's decision is formally issued.

In addition to these specific changes, the staff has completely rewritten MD 8.11 to improve the flow of the document and make it easier to use.

The Commission met with the staff and a public panel on May 25, 2000, to discuss the staff's planned process changes. As background for the meeting, the staff sent a memorandum to the Commission on May 4, 2000 (accession number ML003708647), outlining the history behind previous process changes and the basis for the new changes. In a staff requirements memorandum on June 20, 2000, the Commission stated that it supported the staff's plans to make changes to the review process for 10 CFR 2.206 petitions.

The NRC staff has developed the revision to MD 8.11, incorporating the changes described above, and requests comments on the revision. Management directives are internal NRC procedures which are not ordinarily published for public comment. However, MD 8.11 deals with a process that directly involves the public, and the NRC staff has determined that its efforts to improve the process will benefit from public participation. All comments received will be considered. The result of this effort will be reflected in a future revision of MD 8.11.

Dated at Rockville, Maryland, this 19th day of July 2000.

For the Nuclear Regulatory Commission.

Herbert N. Berkow,

Director, Project Directorate II, Division of Licensing Project Management, Office of Nuclear Reactor Regulation.

BILLING CODE 7590–01–P

ATTACHMENT TO NOTICE

Review Process for 10 CFR 2.206 Petitions

Directive 8.11

Contents

Policy 1

Objectives 1

Organizational Responsibilities and Delegations of Authority 2

Executive Director for Operations (EDO) 2
Chief Information Officer (CIO) 2
General Counsel (GC) 2
Office Directors 2
Regional Administrators 3
2.206 PRB Chairperson 3
Division Directors 4
Director, Division of Licensing Project Management, (DLPM)
Office of Nuclear Reactor Regulation (NRR) 4

Applicability 4

Handbook 4

Definitions 4

References 5

U. S. Nuclear Regulatory Commission

Volume: 8 Licensee Oversight Programs NRR

Review Process for 10 CFR 2.206 Petitions Directive 8.11

Policy
(8.11–01)

Through Section 2.206 of Title 10 of the *Code of Federal Regulations* (10 CFR 2.206), the U.S. Nuclear Regulatory Commission provides members of the public with the means to request enforcement-related (as distinguished from others such as licensing or rulemaking) action. The Commission may grant a request for action it receives, in whole or in part, take other action that satisfies the concerns raised by the requester, or deny the request. Requests that raise health and safety and other concerns without requesting enforcement-related action will be reviewed by means other than the 10 CFR 2.206 process.

Objectives
(8.11–02)

- To ensure the public health and safety through the prompt and thorough evaluation of any potential problem addressed by a petition filed under 10 CFR 2.206. (021)
- To provide for appropriate participation by the petitioners in, and observation by the public of, NRC's decisionmaking activities related to a 10 CFR 2.206 petition. (022)
- To ensure effective communication with the petitioner and other stakeholders on the status of the petition, including providing relevant documents and notification of interactions between the NRC staff and a licensee or certificate holder relevant to the petition. (023)

Organizational Responsibilities and Delegations of Authority
(8.11–03)

Executive Director for Operations (EDO)
(031)

Receives and assigns action for all petitions filed under 10 CFR 2.206.

Chief Information Officer (CIO)
(032)

Provides hardware, software, and communication services support of the NRC Home Page for making information publicly available on the status of the petitions.

General Counsel (GC)
(033)

- Gives legal review and advice on 10 CFR 2.206 petitions and director's decisions upon specific request from the staff in special cases or where the petition raises legal issues. (a)
- Gives legal advice to the EDO, office directors, and staff on relevant 2.206 matters. (b)

Office Directors
(034)

- Have overall responsibility for assigned petitions. (a)
- Approve or deny a petitioner's request for immediate action. (b)
- Sign acknowledgment letters, *Federal Register* notices and director's decisions. (c)
- Provide up-to-date information for the monthly status report on all assigned petitions. (d)
- Appoint a petition review board (PRB) chairperson. (e)
- Designate a petition manager for each petition. (f)

Office Directors
(034) (continued)

- Promptly notify (1) the Office of Investigations of any allegations of suspected wrongdoing by a licensee or certificate holder, applicant for a license or certificate, their contractors, or their vendors or (2) the Office of the Inspector General of suspected wrongdoing by an NRC staff person or NRC contractor, that are contained in the petitions they may receive. (g)
- Provide drafted director's decisions to the Office of Enforcement for review. (h)
- Designate an office 2.206 petition coordinator (Office of Nuclear Materials Safety and Safeguards). (i)

Regional Administrators
(035)

- Promptly refer any 2.206 petitions they may receive to the EDO. (a)
- As needed, provide support and information for the preparation of an acknowledgment letter and/or a director's decision on a 2.206 petition. (b)
- Make the petition manager aware of information that is received or that is the subject of any correspondence relating to a pending petition. (c)
- Participate, as necessary, in meetings with the petitioner and public, in technical review of petitions and in deliberations of the PRB. (d)

2.206 PRB Chairperson
(036)

Each program office has a board chairperson, generally a Senior Executive Service manager, who will—

- Convene PRB meetings. (a)
- Ensure appropriate review of all new petitions in a timely manner. (b)
- Ensure appropriate documentation of PRB meetings. (c)
- Convene periodic PRB meetings with the petition managers to discuss the status of open petitions and to provide guidance for timely issue resolution. (d)

Division Directors
(037)

Concur, as appropriate, in each extension request from petition managers in their organization and forward the extension request to the Office of the EDO for approval.

Director, Division of Licensing Project Management, (DLPM)
Office of Nuclear Reactor Regulation (NRR)
(038)

Appoints the Agency 2.206 Petition Coordinator, normally a DLPM staff person.

Applicability
(8.11–04)

The policy and guidance in this directive and handbook apply to all NRC employees.

Handbook
(8.11–05)

Handbook 8.11 details the procedures for staff review and disposition of petitions submitted under Section 2.206.

Definitions
(8.11–06)

A 10 CFR 2.206 Petition. A written request filed by any person that the Commission modify, suspend, or revoke a license, or take any other enforcement-related action that may be proper. The request must meet the criteria for review under 10 CFR 2.206 (see Part III of Handbook 8.11).

A 10 CFR 2.206 Technical Review Meeting. A meeting open to the public and held by NRC staff to provide an opportunity to the petitioner and the licensee, certificate holder, or other affected party to supply information to assist NRC staff in the evaluation of petitions.

References
(8.11–07)

Code of Federal Regulations—

10 CFR 2.206, "Requests for Action Under this Subpart."

10 CFR 2.790, "Public Inspections, Exemptions, Requests for Withholding."

10 CFR 2.1205, "Request for a hearing; petition for leave to intervene."

Management Directives—

— 3.5, "Public Attendance at Certain Meetings Involving the NRC Staff."

— 8.8, "Management of Allegations."

— 12.6, "NRC Sensitive Unclassified Information Security Program."

Memorandum of Understanding Between the NRC and the Department of Justice, December 12, 1988.

"Nuclear Regulatory Commission Issuances," published quarterly as NUREG-0750.

Review Process for 10 CFR 2.206 Petitions

Handbook 8.11

Contents

Part I

Introduction 1

Title 10 of the *Code of Federal Regulations*, Section 2.206 (10 CFR 2.206) (A) 1

General Cautions (B) 1

Part II

Initial Staff Actions 3

NRC's Receipt of a Petition (A) 3

Process Summary (1) 3

Assignment of Staff Action (2) 3

Office Action (B) 4

Petition Manager Action (C) 4

Part III

Petition Review Board (PRB) 7

General (A) 7

Schedule (1) 7

Board Composition (2) 7

Preparation for the PRB Meeting (B) 8

Criteria for Petition Evaluation (C) 10

Criteria for Reviewing Petitions Under 10 CFR 2.206 (1) 10

Criteria for Rejecting Petitions Under 10 CFR 2.206 (2) 11

Criteria for Consolidating Petition (3) 12

PRB Meeting (D) 12

Informing the Petitioner of the Results (E) 14

Meeting with the Petitioner (F) 14

Response to the Petitioner (G) 15

Requests That Do Not Meet the Criteria (1) 15

Requests That Meet the Criteria (2) 15

Sending Documents to the Petitioner (H) 16

Contents (continued)

Part IV

Petition Review Activities 18

Reviewing the Petition (A) 18
Interoffice Coordination (1) 18
Request for Licensee Input (2) 19
Technical Review Meeting With the Petitioner (3) 19
Additional Petition Review Board (PRB) Meetings (4) 19
Schedule (B) 19
Keeping the Petitioner Informed (C) 20
Updates to Management and the Public (D) 21

Part V

The Director's Decision 22

Content and Format (A) 22
Final Versus Partial Director's Decisions (B) 23
Granting the Petition (C) 23
Denying the Petition (D) 24
Issuing the Proposed Director's Decision for Comment (E) 24
Comment Disposition (F) 25
Issuing the Director's Decision (G) 25
Administrative Issues (H) 26
Commission Actions (I) 28

Exhibits

1 Simplified 2.206 Process Flow Chart 29
2 Petition Manager Checklist 31
3 Sample Closure Letter for Requests That are not 2.206 Petitions 33
4 Sample Acknowledgment letter 34
5 Sample *Federal Register* Notice 35
6 Sample Director's Decision and Cover Letter 36
7 Sample *Federal Register* Notice for Director's Decision 40
8 Sample Letters Requesting Comments on the Proposed Director's Decision 42

Part I

Introduction

Title 10 of the *Code of Federal Regulations*, Section 2.206 (10 CFR 2.206) (A)

This section of the regulations has been a part of the Commission's regulatory framework since the Commission was established in 1975. 10 CFR 2.206 permits any person to file a petition to request that the Commission take enforcement-related action., i.e., to modify, suspend, or revoke a license or to take other appropriate action. (1)

Section 2.206 requires that the petition be submitted in writing and provide the grounds for taking the proposed action. The NRC staff will not treat general opposition to nuclear power or a general assertion of a safety problem, without supporting facts, as a formal petition under 10 CFR 2.206. The staff will treat general requests as allegations or routine correspondence. Petitioners are encouraged to provide a telephone number or email address through which the staff may make contact. (2)

General Cautions (B)

Management Directive 8.8, "Management of Allegations," provides agency policy with regard to notifying the Office of Investigations (OI) and the Office of the Inspector General (OIG) of wrongdoing matters, as well as initiating, prioritizing, and terminating investigations. The petition manager should become familiar with the current version of this directive and follow the policy outlined therein when dealing with issues requiring OI or OIG investigations. (1)

Any mention outside NRC of an ongoing OI or OIG investigation, for example, as an explanation for schedule changes, requires the approval of the Director, OI or OIG, respectively. (2)

General Cautions (B) (continued)

If the petition contains information on alleged wrongdoing on the part of a licensee or certificate holder, an applicant for a license or certificate, their contractors, or their vendors, treat the petition, or the relevant part of the petition, as an allegation and promptly notify OI. If the petition contains information on alleged wrongdoing involving an NRC employee, NRC contractors, or NRC vendors, promptly notify OIG. (3)

Note that throughout the balance of this handbook, any references to a licensee shall be interpreted to include certificate holders, applicants for licenses or certificates, or other affected parties. (4)

Part II
Initial Staff Actions

NRC's Receipt of a Petition (A)

Process Summary (1)

After NRC receives a petition, the Executive Director for Operations (EDO) assigns it to the director of the appropriate office for evaluation and response. The original incoming petition is sent to the office and a copy of the petition is sent to the Office of the General Counsel (OGC). The official response is the office director's written decision addressing the issues raised in the petition. The office director can grant, partially grant, or deny the petition. The Commission may, on its own initiative, review the director's decision, although it will not entertain a request for review of the director's decision

Assignment of Staff Action (2)

Petitions may be in the form of correspondence or requests for NRC action that may or may not cite 10 CFR 2.206 and may initially be directed to staff other than the EDO. In any of these cases, the staff member who receives the document should make an initial evaluation as to whether the document meets the criteria for review under 10 CFR 2.206 provided in Part III of this handbook. Staff members who are uncertain whether or not the document meets the criteria should consult their management or office coordinators for further guidance. If a petition meets the criteria but does not specifically cite 10 CFR 2.206, the staff will attempt to contact the petitioner by telephone to determine if the he or she wants the request processed pursuant to 10 CFR 2.206. The staff may determine that a request forwarded for staff action is not a petition for enforcement-related action but, rather, a petition for rulemaking, for example. If there is any uncertainty about whether or not a request is a petition under 10 CFR 2.206, it should be treated as one so that a petition review board (PRB) can make its recommendations, as described in Part III of this handbook. (a)

NRC's Receipt of a Petition (A) (continued)

Assignment of Staff Action (2) (continued)

If the staff receives a request that it believes is a 10 CFR 2.206 petition, it will forward the request to the Office of the EDO (OEDO) for assignment of action. Petitions also may be forwarded to the OEDO from an Atomic Energy and Licensing Board or from a Presiding Officer in accordance with 10 CFR 2.1205(l)(2). The EDO will assign each petition to the appropriate office for action. If the document does not cite 10 CFR 2.206 and does not meet the criteria for review under that section, the staff will respond to it under some other process (e.g., routine correspondence, allegations). (b)

Petitions that cite 10 CFR 2.206 and are addressed to the EDO will be added to the Agencywide Documents Access and Management Systems (ADAMS) by OEDO. OEDO will not declare these petitions official agency records nor will it make them publicly available. Those steps will be carried out by the assigned office as described below. (c)

Office Action (B)

Upon receipt, office management will assign the petition to a petition manager. (1)

The Agency 2.206 Petition Coordinator (appointed by the Director, Division of Licensing Project Management, Office of Nuclear Regulation (NRR)), receives copies of all 2.206 petitions from OEDO and will add them to the 2.206 database. (2)

Petition Manager Action (C)

The petition manager will promptly review the petition and determine whether or not it contains allegations or sensitive information. The timing of this step is particularly important for petitions that are not addressed to the EDO. These documents have been entered into ADAMS through the Document Control Desk (DCD). The documents are initially coded as not publicly available. However, after a specified period of time the documents are released to the public. The delay allows the staff time to review the petition for allegations or other sensitive information. If the petition manager determines that such a document contains allegations or other sensitive information, he or she should immediately contact the DCD to prevent releasing the document to the public. (1)

Petition Manager Action (C) (continued)

Before the petition is released to the public, before the PRB meeting, and in any event within 1 week of receipt of the petition by the assigned office, the petition manager will inform the petitioner by telephone that the 2.206 petition process is a public process in which the petition and all the information in it will be made public. If the petitioner requests anonymity and that the petition not be made public, the petition manager will advise the petitioner that, because of its public nature, the 2.206 process cannot provide protection of the petitioner's identity. In such cases, the petition manager will obtain the agreement of the petitioner as to how the matter will be handled (i.e., as an allegation or not) and document the petitioner's agreement in writing. In cases where the staff identifies certain issues in a petition that it believes are more appropriately addressed using the allegation process, the petition manager will obtain the agreement of the petitioner as to how these issues will be handled (i.e., as an allegation or not) and document the petitioner's agreement in writing. The treatment of all or part of the petition as an allegation may be documented in the allegation acknowledgment letter (see Management Directive (MD) 8.8, "Management of Allegations"). (2)

If the request clearly does not meet the criteria for review as a 10 CFR 2.206 petition, the petition manager will also discuss this issue with the petitioner. The petitioner may be able to help the petition manager better understand the basis for the petition or the petitioner may realize that a 10 CFR 2.206 petition is not the correct forum for the issues raised in the request. Finally, the petition manager will offer the petitioner an opportunity to have one or more representatives give a presentation to the PRB and cognizant supporting staff either by telephone (or videoconference, if available) or in person. This is an opportunity for the petitioner to provide any relevant additional explanation and support for the request. This type of meeting is described in more detail in Part III of this handbook. (3)

After the initial contact with the petitioner, the petition manager will promptly advise the licensee(s) of the petition, send the appropriate licensee(s) a copy of the petition, and ensure that the petition and all subsequent related correspondence are made available to the public. (Note that if the petitioner wishes to have the request handled as an allegation, the request is no longer a 2.206 petition.) Any information related to allegations or other sensitive information that make up a part of the petition will be redacted from copies sent to the licensee or made

Petition Manager Action (C) (continued)

available to the public. For allegations, the petition manager should refer to MD 8.8. As discussed in MD 8.8, allegations must be forwarded to the associated Office Allegations Coordinator expeditiously. MD 8.8 also addresses the referral of wrongdoing issues to the Office of Investigations and the Office of the Inspector General. (4)

See Exhibit 1, Simplified Process Flow Chart and Exhibit 2, Checklist of Petition Manager Actions for further information on petition manager actions. (5)

Part III
Petition Review Board (PRB)

General (A)

Schedule (1)

The assigned office holds a PRB meeting on the 2.206 petition to determine the appropriate schedule as well as how best to respond to the petitioner's concerns. The PRB meeting is normally held within 2 weeks of receipt of the petition. The PRB meeting may be held much sooner if staff decisions are required on short-term immediate actions (e.g., a request to shut down an operating facility or prevent restart of a facility that is ready to restart). In unusual situations, it may not be possible to hold the meeting in time to address immediate actions. In these cases, the staff will decide how the immediate actions will be addressed and obtain appropriate management concurrence as soon as possible. If the staff plans to take an action that is contrary to an immediate action requested in the petition before issuing the acknowledgment letter (such as permitting restart of a facility when the petitioner has requested that restart not be permitted), the petition manager must promptly notify the petitioner by telephone of the pending staff action. (a)

Board Composition (2)

The PRB consists of—(a)

- A PRB chairperson (generally a Senior Executive Service manager) (i)
- A petition manager (ii)
- Cognizant management and staff, as necessary (iii)
- A representative from the Office of Investigations (OI), as needed (iv)
- A representative from the Office of Enforcement (OE) and, for petitions assigned to the Office of Nuclear Regulation (NRR), the NRR Senior Enforcement Coordinator, as needed (v)

General (A) (continued)

Board Composition (2) (continued)

In addition, a representative from the Office of the General Counsel (OGC) will normally participate. (b)

Preparation for the PRB Meeting (B)

The petition manager will provide copies of the petition to PRB and assist in scheduling the review board meeting. The petition manager also will arrange for cognizant technical staff members to attend the meeting, as necessary, and prepare a presentation for the review board. In assigning technical staff members to the petition, management will consider any potential conflict from assigning the same staff who were previously involved with the issue that gave rise to the petition. (1)

The PRB presentation should include—(2)

- A recommendation as to whether or not the petition meets the criteria for review under 10 CFR 2.206 (a)
- A discussion of the safety significance of the issues raised (b)
- Recommendations for any immediate actions (whether requested or not) (c)
- Recommendations on whether or not assistance from OI, OE, or OGC is necessary (d)
- Request confirmation concerning referral to OI or the Office of the Inspector General (OIG), as appropriate (e)
- The proposed schedule, including the review schedule for the affected technical branches (f)

The petition manager also will offer a meeting or teleconference between the petitioner and the PRB before the board reviews the petition. This meeting or teleconference, if held, is an opportunity for the petitioner to provide any relevant additional explanation and support for the request in advance of the PRB's evaluation. The staff will hold this type of meeting if the petitioner desires it. If staff decisions on any of the petitioner's immediate action requests are required before the petitioner's presentation can be scheduled, those decisions will not be delayed. (3)

Preparation for the PRB Meeting (B) (continued)

The petition manager also will invite the licensee to participate in the meeting or teleconference to ensure that it understands the concerns about its facility or activities. The PRB members may ask any questions needed to clarify the petitioner's request. The licensee may also ask questions to clarify the issues raised by the petitioner. The petitioner can choose whether or not to respond to the licensee's questions. Any member of the public may attend (or listen in by telephone for a teleconference) as an observer. Meetings between PRB and the petitioner normally will be held at NRC headquarters in Rockville, Maryland, with provisions for participation by telephone or videoconference. This public meeting or teleconference is separate from the (closed) PRB meeting during which the PRB members develop their recommendations with respect to the petition. (4)

The petition manager will ensure that staff at the meeting or teleconference are aware of the need to protect sensitive information from disclosure. Sensitive information includes safeguards or facility security information, proprietary or confidential commercial information, or information relating to an ongoing investigation of wrongdoing. (5)

If the petitioner chooses to address PRB by telephone, it is not considered a meeting and no public notice is necessary. The petition manager will establish a mutually agreeable time and date and arrange to conduct the teleconference on a recorded line through the NRC Headquarters Operations Center (301-816-5100). The tape recording from the Operations Center is converted to a printed transcript that is treated as a supplement to the petition and is sent to the petitioner and the same distribution as the original petition. The petition manager will make arrangements for transcription service by submitting an NRC Form 587 to the Atomic Safety and Licensing Board Panel or by sending an email to Court Reporter, giving the same information as requested on the Form 587. (6)

If the petitioner chooses to attend in person, the meeting will take place at NRC headquarters at a mutually agreeable time. For the meeting, the petition manager will follow the prior public notice period and other provisions of Management Directive (MD) 3.5, "Public Attendance at Certain Meetings Involving the NRC Staff." However, time constraints associated with this type of meeting will often dictate that the 10-day public notice period described in MD 3.5 will not be

Preparation for the PRB Meeting (B) (continued)

met. MD 3.5 allows for less than 10 days public notice, if necessary, with appropriate management concurrence. The meeting should be noticed as a meeting between the NRC staff, the petitioner, and the licensee (unless the licensee chooses not to participate). The licensee is invited to participate, as in the teleconference described above, and members of the public may attend as observers. The meeting is transcribed and the transcript is treated in the same manner as in the case of a telephone briefing. (7)

At the meeting or teleconference, the chairperson will provide a brief summary of the 2.206 process, the petition, and the purpose of the discussion that will follow. The petitioner may designate a reasonable number of associates to assist him or her in addressing PRB concerning the petition. The petitioner representative(s) will be allowed a reasonable amount of time to articulate the bases for the petition. The NRC staff and the licensee will have an opportunity to ask the petitioner questions for purposes of clarification. The petitioner can choose whether or not to respond to the licensee's questions. PRB may meet in closed session before and/or after the meeting with the petitioner to conduct its normal business. (8)

The requirements for scheduling and holding the petitioner presentation may impact the established time goals for holding the regular PRB meeting and issuing the acknowledgment letter. Any such impacts should be kept to a minimum. (9)

Criteria for Petition Evaluation (C)

The staff will use the criteria discussed in this section to determine whether or not a petition should be considered under 10 CFR 2.206 and whether or not similar petitions should be consolidated.

Criteria for Reviewing Petitions Under 10 CFR 2.206 (1)

The staff will review a petition under the requirements of 10 CFR 2.206 if the request meets all of the following criteria—(a)

- The petition contains an explicit or implicit request for enforcement-related action such as issuing an order modifying, suspending, or revoking a license, issuing a notice of violation, with or without a proposed civil penalty, etc. (i)

Criteria for Petition Evaluation (C) (continued)

Criteria for Reviewing Petitions Under 10 CFR 2.206 (1) (continued)

- The facts that constitute the bases for taking the particular action are specified. The petitioner must provide some element of support beyond the bare assertion. The supporting facts must be credible and sufficient to warrant further inquiry. (ii)

- Acceptance for review under 10 CFR 2.206 will not result in circumventing an available proceeding in which the petitioner is or could be a party. For example, if a petitioner raises an issue that he or she has raised or could raise in a licensing proceeding, the staff will deny the petitioner treatment under 10 CFR 2.206. (iii)

An exception to the first two criteria is any petition to intervene and request for hearing in a licensing proceeding that is referred to the 10 CFR 2.206 process in accordance with 10 CFR 2.1205(l)(2). These referrals may be made when the petition does not satisfy the legal requirements for a hearing or intervention and the Atomic Safety and Licensing Board Panel or the Presiding Officer determines that referral to the 10 CFR 2.206 process is appropriate. For these referrals, the substantive issues in the request for a hearing or intervention will be read as an implicit request for enforcement-related action, thus satisfying the criteria for treatment under the 10 CFR 2.206 review process. (b)

Criteria for Rejecting Petitions Under 10 CFR 2.206 (2)

The staff will not review a petition under 10 CFR 2.206, whether specifically cited or not, under the following circumstances—

- The incoming correspondence does not ask for an enforcement-related action or fails to provide sufficient facts to support the petition but simply alleges wrongdoing, violations of NRC regulations, or existence of safety concerns. The request cannot be simply a general statement of opposition to nuclear power or a general assertion without supporting facts (e.g., the quality assurance at the facility is inadequate). These assertions will be treated as routine correspondence or as allegations which will be referred for appropriate action in accordance with MD 8.8, "Management of Allegations." (a)

Criteria for Petition Evaluation (C) (continued)

Criteria for Rejecting Petitions Under 10 CFR 2.206 (2) (continued)

- The petitioner raises issues that have already been the subject of NRC staff review and evaluation either on that facility, other similar facilities, or on a generic basis, for which a resolution has been achieved, the issues have been dispositioned, and the resolution is applicable to the facility in question. This would include requests to reconsider or reopen a previous enforcement action (including a decision not to initiate an enforcement action) or a director's decision. Such requests will not be treated as a 2.206 petition unless they present significant new information. (b)
- The request is to deny a license application or amendment. This type of request should initially be addressed in the context of the relevant licensing action, not under 10 CFR 2.206. (c)
- The request addresses deficiencies within existing NRC rules. This type of request should be addressed as a petition for rulemaking. (d)

Criteria for Consolidating Petition (3)

Generally, all requests submitted by different individuals will be treated and evaluated separately. When two or more petitions request action against the same licensee, specify essentially the same bases, provide adequate supporting information, and are submitted at about the same time, PRB will consider the benefits of consolidating the petitions against the potential of diluting the importance of any petition and recommend whether or not consolidation is appropriate. The assigned office director will determine whether or not to consolidate the petitions.

PRB Meeting (D)

PRB ensures that an appropriate petition review process is followed. The purposes of the PRB process are to—(1)

- Determine whether or not the petitioner's request meets the criteria for review as a 10 CFR 2.206 petition (see Part III(C) of this handbook) (a)
- Determine whether or not the petitioner should be offered or informed of an alternative process (e.g., consideration of issues as allegations, consideration of issues in a pending license proceeding, or rulemaking). (b)

PRB Meeting (D) (continued)

- Determine whether there is a need for any immediate actions (whether requested or not) (c)
- Establish a schedule for responding to the petitioner so that a commitment is made by management and the technical review staff to respond to the petition in a timely manner (see Part IV of this handbook for guidance regarding schedules) (d)
- Address the possibility of issuing a partial director's decision (e)
- Determine whether or not the petition should be consolidated with another petition (f)
- Determine whether or not referral to OI or OIG is appropriate (g)
- Determine whether or not there is a need for OGC to participate in the review (h)
- Determine whether or not the licensee should be requested to respond to the petition (i)
- Determine whether or not the petition is sufficiently complex that additional review board meetings should be scheduled to ensure that suitable progress is being made (j)

The PRB meeting is a closed meeting, separate from any meeting with the petitioner and the licensee, during which the PRB members develop their recommendations with respect to the petition. At the meeting, the petition manager briefs PRB on the petitioner's request(s), any background information, the need for an independent technical review, and a proposed plan for resolution, including target completion dates. The petition manager, with the assistance of the Agency 2.206 Petition Coordinator, ensures appropriate documentation of all petition recommendations in the summary of the PRB meeting. (2)

The OGC representative provides legal review and advice on 10 CFR 2.206 petitions. OGC may be assigned as the responsible office for the review, if appropriate. (3)

Informing the Petitioner of the Results (E)

After PRB meets, and before issuing the acknowledgment letter, the petition manager will ensure that appropriate levels of management in the assigned office are informed of the board's recommendations and that they concur. The petition manager will then inform the petitioner by telephone as to whether or not the petition meets the criteria for review under 10 CFR 2.206, of the disposition of any requests for immediate action, of how the review will proceed, and that an acknowledgment letter is forthcoming. If the staff plans to take an action that is contrary to an immediate action requested in the petition before issuing the acknowledgment letter, the petition manager must promptly notify the petitioner by telephone of the pending staff action. An example of a contrary action would be if NRC permitted restart of a facility when the petitioner had requested that restart not be permitted. The petitioner will not be advised of any wrongdoing investigation being conducted by OI or OIG. (1)

Meeting with the Petitioner (F)

After informing the petitioner of the pertinent PRB recommendations, the petition manager will offer the petitioner an opportunity to comment on the recommendations. This opportunity will be in the form of a meeting or teleconference between the petitioner and the PRB. If the petitioner accepts this offer, the petition manager will establish a mutually agreeable date for the meeting or teleconference with the petitioner. The petition manager also will request the licensee to participate and will coordinate the schedules and dates with the licensee. The meeting or teleconference should be scheduled so as not to adversely affect the established petition review schedule. (1)

This meeting or teleconference, if held, is an opportunity for the petitioner to provide any relevant additional explanation and support for the request in light of PRB's recommendations. The PRB members may ask any questions needed to clarify the petitioner's request. If staff decisions on any of the petitioner's immediate action requests are required before the petitioner's presentation can be scheduled, those decisions will not be delayed. The format of the meeting or teleconference, application of MD 3.5, transcription, etc., are the same as for a meeting or teleconference held prior to the PRB's review of the petition. (2)

After this discussion, PRB will consider the need to modify any of its recommendations. The final recommendations will be included in the

Meeting with the Petitioner (F) (continued)

acknowledgment letter. The acknowledgment letter will address any comments the petitioner made concerning the initial PRB recommendations and the staff's response. The petitioner will be promptly notified of staff decisions on any immediate action requests. If the petitioner presents significant new information to the staff, PRB may determine that this new information constitutes a new petition that will be treated separately from the initial petition. (3)

The requirements for scheduling and holding the petitioner presentation may impact the established time goals for issuing the acknowledgment letter. Any such impacts should be kept to a minimum. (4)

Response to the Petitioner (G)

After PRB finalizes its recommendations, the petition manager prepares a written response to the petitioner.

Requests That Do Not Meet the Criteria (1)

If PRB, with office-level management concurrence, determines that the petition does not meet the criteria for review as a 10 CFR 2.206 petition, the petition manager then prepares a letter that (1) explains why the request is not being reviewed under 10 CFR 2.206, responds, to the extent possible at that time, to the issues in the petitioner's request, and (3) explains what further actions, if any, the staff intends to take in response to the request (e.g., treat it as an allegation or routine correspondence). See Exhibit 3 for an example letter. (a)

The petition manager will attach the original petition and any enclosure(s) to the Reading File copy of the letter. (b)

Requests That Meet the Criteria (2)

If the PRB finds that the petition meets the criteria for review as a 10 CFR 2.206 petition, the petition manager prepares an acknowledgment letter and associated Federal Register notice (see Exhibits 4 and 5). The letter should acknowledge the petitioner's efforts in bringing issues to the staff's attention. If the petition contains a request for immediate action by the NRC, such as a request for immediate suspension of facility operation until final action is taken on

Response to the Petitioner (G) (continued)

Requests That Meet the Criteria (2) (continued)

the request, the acknowledgment letter must explain the staff's response to the immediate action requested. If the immediate action is denied, the staff must explain the basis for the denial in the acknowledgment letter. (a)

The petition manager ensures that a copy of this management directive and of the pamphlet "Public Petition Process," prepared by the Office of Public Affairs, are included with the acknowledgment letter. The acknowledgment letter also should include the name and telephone number of the petition manager, identify the technical staff organizational units that will participate in the review, and provide the planned schedule for the staff's review. A copy of the acknowledgment letter must be sent to the appropriate licensee and the docket service list(s). (b)

The petition manager will attach the original 2.206 petition and any enclosure(s) to the Reading File copy of the acknowledgment letter. (c)

In rare cases the staff may be prepared to respond to the merits of the petition immediately. In such a case, the staff can combine the functions of the acknowledgment letter and the director's decision into one document. A similar approach would be taken in combining the associated Federal Register notices. (d)

Sending Documents to the Petitioner (H)

If the PRB determines that the request is a 2.206 petition, then the petition manager will—

- Place the petitioner on distribution for all relevant NRC correspondence to the licensee to ensure that the petitioner receives copies of all NRC correspondence with the licensee pertaining to the petition. (1)
- Add the petitioner to the service list(s) for the topic or affected licensee(s) for all headquarters and regional documents on the affected dockets. (2)

Sending Documents to the Petitioner (H) (continued)

- Request the licensee to send copies of any future correspondence related to the petition to the petitioner, with due regard for proprietary, safeguards, and other sensitive information. The licensee should continue to send these documents to the petitioner for 90 days after the director's decision is issued. (3)

- To the extent that he or she is aware of such documents, ensure that the petitioner is placed on distribution for other NRC correspondence relating to the issues raised in the petition, including relevant generic letters or bulletins that are issued during the pendency of the NRC's consideration of the petition. This does not include NRC correspondence or documentation related to an OI or OIG investigation, which will not be released outside NRC without the approval of the Director, OI or OIG, respectively. (4)

Part IV

Petition Review Activities

Reviewing the Petition (A)

Interoffice Coordination (1)

The petition manager coordinates all information required for the petition review. The petition manager also advises his or her management of the need for review and advice from the Office of the General Counsel (OGC) regarding a petition in special cases. When appropriate, an Associate Director in the Office of Nuclear Regulation, a Division Director in the Office of Nuclear Material Safety and Safeguards, or the Director of the Office of Enforcement, requests OGC involvement through the OGC special counsel assigned to 2.206 matters. (a)

All information related to a wrongdoing investigation by the Office of Investigations (OI) or the Office of the Inspector General (OIG), or even the fact that an investigation is being conducted, will receive limited distribution within NRC and will not be released outside NRC without the approval of the Director, OI or OIG, respectively (see Management Directive (MD) 8.8). Within NRC, access to this information is limited to those having a need-to-know. Regarding a 2.206 petition, the assigned office director, or his designee, maintains copies of any documents required and ensures that no copies of documents related to an OI or OIG investigation are placed in the docket file, the agencywide documents access and management systems (ADAMS), or the Public Document Room (PDR), without the approval of the Director, OI or OIG, respectively. (b)

Reviewing the Petition (A) (continued)

Request for Licensee Input (2)

If appropriate, the petition manager will request the licensee to provide a response to the NRC on the issues specified in the petition, usually within 30 days. This staff request will usually be made in writing. The petition manager will advise the licensee that the NRC will place the licensee's response in the PDR and provide the response to the petitioner. (a)

Unless necessary for NRC's proper evaluation of the petition, the licensee should avoid using proprietary or personal privacy information that requires protection from public disclosure. If such information is necessary to properly respond to the petition, the petition manager ensures the information is protected in accordance with 10 CFR 2.790. (b)

Technical Review Meeting With the Petitioner (3)

A technical review meeting with the petitioner will be held whenever the staff believes that such a meeting (whether requested by the petitioner, the licensee, or the staff) would be beneficial to the staff's review of the petition. Meeting guidance is provided in MD 3.5. The petition manager will ensure that the meeting does not compromise the protection of sensitive information. A meeting will not be held simply because the petitioner claims to have additional information and will not present it in any other forum.

Additional Petition Review Board (PRB) Meetings (4)

Additional PRB meetings may be scheduled for complex issues. Additional meetings also may be appropriate if the petition manager finds that significant changes must be made to the original plan for the resolution of the petition.

Schedule (B)

The goal is to issue the proposed director's decision for comment within 120 days after issuing the acknowledgment letter. The proposed director's decision for uncomplicated petitions should be issued in less than 120 days. The Office of the Executive Director for Operations (OEDO) tracks the target date, and any change of the date requires approval by the EDO. The petition manager monitors the progress of any OI investigation and related enforcement actions. Enforcement

Schedule (B) (continued)

actions that are prerequisites to a director's decision should be expedited and completed in time to meet the 120-day goal. Investigations by OI and OIG associated with petitions should be expedited to the extent practicable. However, the goal of issuing the proposed director's decision for comment within 120 days after issuing the acknowledgment letter applies only to petitions whose review schedules are within the staff's control. If issues in a petition are the subject of an investigation by OI or OIG, or a referral to the Department of Justice (DOJ), or if NRC decides to await a Department of Labor decision, the clock for the 120-day goal is stopped for the portion of the petition awaiting disposition by those organizations. The clock will start again when the staff receives the results of the investigation. If the staff can respond to some portions of the petition without the results of the investigation, then a partial director's decision should be issued within the original 120 days. When the staff receives the results of the investigation, it will promptly develop and issue a final director's decision. See Part V of this handbook for a discussion of partial director's decisions. (1)

If the director's decision cannot be issued in 120 days for other reasons (e.g., very complex issues), the assigned division director determines the need for an extension of the schedule and requests the extension from the EDO. In addition, the petition manager will promptly contact the petitioner to explain the reason(s) for the delay and will maintain a record of such contact. (2)

Keeping the Petitioner Informed (C)

The petition manager ensures that the petitioner is notified at least every 60 days of the status of the petition, or more frequently if a significant action occurs. The petition manager makes the bimonthly status reports by telephone. The petition manager should speak directly to the petitioner or otherwise confirm that the petitioner has received the status report. The petition manager keeps up-to-date on the status of the petition so that reasonable detail can be provided with the status reports. However, the status report to the petitioner will not indicate—

- An ongoing OI or OIG investigation, unless approved by the Director, OI or OIG (1)
- The referral of the matter to DOJ (2)
- Enforcement action under consideration (3)

Updates to Management and the Public (D)

On a monthly basis, the Agency 2.206 Petition Coordinator will contact all petition managers reminding them to prepare a status report regarding 2.206 petitions in their offices. The petition managers should email the status report for each open petition, with the exception of sensitive information as described below, to Petition. The Agency 2.206 Petition Coordinator combines all the status reports, including staff performance metrics for petitions processed under 10 CFR 2.206 for the current year, in a monthly report to the EDO from the Associate Director, Project Licensing and Technical Analysis, and provides a copy of the report to the Document Control Desk (PUBLIC) and the Web operator for placement on the NRC Home Page. (1)

If the status of the petition includes sensitive information that may need to be protected from disclosure, the petition manager will so indicate in the email and in the status report itself. Sensitive information includes safeguards or facility security information, proprietary or confidential commercial information, information relating to an ongoing investigation of wrongdoing or enforcement actions under development, or information about referral of matters to the DOJ, and should be handled in accordance with MD 12.6, "NRC Sensitive Unclassified Information Security Program." The Agency 2.206 Petition Coordinator will protect this information from disclosure by placing the affected status report(s) in a separate enclosure to the status report, clearly marking the status report to the EDO, and redacting the sensitive information from the version of the report that is made public. (2)

The NRC Home Page provides the up-to-date status of pending 2.206 petitions, director's decisions issued, and other related information. The NRC external home page (*http://www.nrc.gov*) is accessible via the World Wide Web, and documents related to petitions may be found on the "Public Participation & School Programs" page under "Petitions to Modify, Suspend, or Revoke a License Under 10 CFR 2.206." Director's decisions are also published in NRC Issuances (NUREG-0750). (3)

Part V

The Director's Decision

Content and Format (A)

The petition manager prepares the director's decision on the petition and the associated *Federal Register* notice for the office director's consideration, including coordination with the appropriate staff supporting the review. See Exhibits 6 and 7 for a sample director's decision with cover letter and the associated *Federal Register* notice, respectively. The petition manager will also prepare letters to the petitioner and the licensee that will enclose the proposed director's decision and request comments on it (see Exhibit 8). These letters will be routed with the director's decision for concurrence. (1)

The director's decision will clearly describe the issues raised by the petitioner, provide a discussion of the safety significance of the issues, and clearly explain the staff's disposition for each issue. The petition manager will bear in mind the broader audience (i.e., the public) when preparing the explanation of technical issues. Refer to the NRC Plain Language Action Plan, available on the internal web page, for further guidance. In addition, the petition manager will ensure that any documents referenced in the decision are available to the public. If a partial director's decision was issued previously, the final director's decision will refer to, but does not have to repeat the content of, the partial director's decision. After management's review, the petition manager incorporates any proposed revisions in the decision. (2)

If appropriate, the decision and the transmittal letter for the director's decision or partial director's decision should acknowledge that the petitioner identified valid issues and should specify the corrective actions that have been or will be taken to address these issues, notwithstanding that some or all of the petitioner's specific requests for action have not been granted. (3)

Content and Format (A) (continued)

If the Office of Investigations (OI) has completed an investigation before either granting or denying the petition and the wrongdoing matter has been referred to the Department of Justice (DOJ), the petition manager will contact OI and the Office of Enforcement (OE) to coordinate NRC's actions. For petitions assigned to the Office of Nuclear Regulation (NRR), the petition manager also will contact the NRR Senior Enforcement Coordinator. The staff may need to withhold action on the petition in keeping with the Memorandum of Understanding with DOJ. (4)

If the results of a wrongdoing investigation by OI in relation to the petition are available, the staff will consider these results in completing the action on the petition. OI must concur in the accuracy and characterization of the OI findings and conclusions that are used in the decision. (5)

The petition manager will obtain OE's review of the director's decision for potential enforcement implications. For petitions assigned to NRR, the petition manager also will provide a copy of the director's decision to the NRR Senior Enforcement Coordinator. (6)

Final Versus Partial Director's Decisions (B)

The staff will consider preparing a partial director's decision when some of the issues associated with the 2.206 petition are resolved in advance of other issues and if significant schedule delays are anticipated before resolution of the entire petition. (1)

The format and content of a partial director's decision is the same as that of a final director's decision and an accompanying *Federal Register* notice would still be prepared (see Exhibit 7). However, the partial director's decision should clearly indicate those portions of the petition that remain open, explain the reasons for the delay to the extent practical, and provide the staff's schedule for the final director's decision. If all of the issues in the petition can be resolved together, then the final director's decision will address all of the issues. (2)

Granting the Petition (C)

Once the staff has determined that the petition will be granted, in whole or in part, the petition manager will prepare a "Director's Decision Under 10 CFR 2.206" for the office director's signature. The decision will explain the bases upon which the petition has been granted and identify the actions that NRC staff has taken or will take to grant all or that portion of the petition. The decision also should describe any

Granting the Petition (C) (continued)

actions the licensee took voluntarily that address aspects of the petition. The Commission may grant a request for enforcement-related action, in whole or in part, and also may take other action to satisfy the concerns raised by the petition. A petition is characterized as being granted in part when the NRC grants only some of the actions requested and/or takes actions other than those requested to address the underlying problem. If the petition is granted in full, the director's decision will explain the bases for granting the petition and state that the Commission's action resulting from the director's decision is outlined in the Commission's order or other appropriate communication. If the petition is granted in part, the director's decision will clearly indicate the portions of the petition that are being denied and the staff's bases for the denial.

Denying the Petition (D)

Once the staff has determined that the petition will be denied, the petition manager will prepare a "Director's Decision Under 10 CFR 2.206" for the office director's signature. The decision will explain the bases for the denial and discuss all matters raised by the petitioner in support of the request.

Issuing the Proposed Director's Decision for Comment (E)

After the assigned office director has concurred in the proposed director's decision, the petition manager will issue the letters to the petitioner and the licensee enclosing the proposed director's decision and requesting comments on it. The letters, with the enclosure, will be made available to the public through ADAMS. (1)

The intent of this step is to give the petitioner and licensee an opportunity to identify errors in the decision. The letters will request a response within a set period of time, nominally two weeks. The amount of time allowed for the response may be adjusted depending on circumstances. For example, for very complex technical issues it may be appropriate to allow more time for the petitioner and licensee to develop their comments. The letters should be transmitted to the recipients electronically or by fax, if possible. (2)

Comment Disposition (F)

The petition manager will evaluate any comments received on the proposed decision, obtaining the assistance of the technical staff, as appropriate. Although the staff requested comments from only the petitioner and the licensee, comments from other sources (e.g., other members of the public) may be received. These additional comments must be addressed in the same manner as the comments from the petitioner and licensee. A copy of the comments received and the associated staff responses will be included in the final director's decision. An attachment to the decision will generally be used for this purpose. (1)

If no comments are received on the proposed decision, the petition manager will include in the final decision a reference to the letters that requested comments and a statement that no comments were received. (2)

If the comments from the petitioner include new information, the petition review board will be reconvened to determine whether to treat the new information as part of the current petition or as a new petition. (3)

Issuing the Director's Decision (G)

A decision under 10 CFR 2.206 consists of a letter to the petitioner, the director's decision, and the *Federal Register* notice. The petition manager will obtain a director's decision number (i.e., DD-YY-XX) from the Office of the Secretary (SECY). A director's decision number is assigned to each director's decision in numerical sequence. This number is included on the letter to the petitioner, the director's decision, and the *Federal Register* notice. Note that the director's decision itself is not published in the *Federal Register*; only the notice of its availability, containing a summary of the substance of the decision, is published (see Exhibits 6 and 7). (1)

The petition manager will prepare a letter to transmit the director's decision to the petitioner and also prepare the associated *Federal Register* notice. If the staff's response to the petition involves issuing an order, the petition manager will prepare a letter to transmit the order to the licensee. The petition manager also will include a copy of the order in the letter to the petitioner. When the director's decision has been signed, the petition manager will promptly send a copy of the decision, electronically or by fax if possible, to the petitioner. Copies of the

Issuing the Director's Decision (G) (continued)

director's decision and *Federal Register* notice that are sent to the licensee and individuals on the service list(s) are dispatched simultaneously with the petitioner's copy. Before dispatching the director's decision (or partial decision), the petition manager will inform the petitioner of the imminent issuance of the decision and the substance of the decision. (2)

The assigned office director will sign the cover letter, the director's decision, and the *Federal Register* notice. After the notice is signed, the staff forwards it to the Rules and Directives Branch, Office of Administration (ADM/DAS/RDB), for transmittal to the Office of the *Federal Register* for publication. The staff shall NOT include a copy of the director's decision in the package that is sent to RDB. RDB only forwards the *Federal Register* notice to be published. (3)

Administrative Issues (H)

The administrative staff of the assigned office will review the 10 CFR 2.206 package before it is dispatched and determine appropriate distribution. The administrative staff also will immediately (same day) hand -carry the listed material to the following offices (in the case of the petitioner, promptly dispatch the copies.)—(1)

- Rulemakings and Adjudications staff, SECY (a)
  - Five copies of the director's decision (i)
  - Two courtesy copies of the entire decision package including the distribution and service lists (ii)
  - Two copies of the incoming petition and any supplement(s) (iii)
- Petitioner (b)
  - Signed original letter (i)
  - Signed director's decision (ii)
  - A copy of the *Federal Register* notice (iii)
- Chief, Rules and Directives Branch (c)
  - Original signed *Federal Register* notice only (do not include the director's decision) (i)

Administrative Issues (H) (continued)

- Five paper copies of the notice (ii)

The staff must fulfill these requirements promptly because the Commission has 25 calendar days from the date of the decision to determine whether or not the director's decision should be reviewed. (2)

Although 2.206 actions are controlled as green tickets, the staff should use the following guidelines when distributing copies internally and externally—(3)

- When action on a 2.206 petition is completed, the petition manager will ensure that all publicly releasable documentation is placed in the Public Document Room and the agency document control system. (a)
- The assigned office will determine the appropriate individuals and offices to include on the distribution list. (b)

The administrative staff of the assigned office will complete the following actions within 2 working days of issuance of the director's decision: (4)

- Provide one paper copy of the director's decision to the special counsel in the Office of the General Counsel assigned to 2.206 matters. (a)
- Email the final version of the director's decision to the NRC Issuances (NRCI) Project Officer, Publishing Services Branch (PSB), Office of the Chief Information Officer (OCIO). If other information (opinions, partial information (such as errata), or footnotes) is included in the email, clearly identify the director's decision number at the beginning of each file to avoid administrative delays and improve the technical production schedule for proofreading, editing, and composing the documents. In addition, send two paper copies of the signed director's decision to the NRCI Project Officer. (b)
- Email a signed, dated, and numbered copy of the director's decision to NRCWEB for posting on the NRC Home Page. (c)

Administrative Issues (H) (continued)

The petition manager will prepare headnotes, which are a summary of the petition, consisting of no more than a few paragraphs describing what the petition requested and how the director's decision resolved or closed out the petition. The petition manager will email the headnotes to the NRCI Project Officer, PSB, OCIO, for monthly publication in the NRC Issuances, NUREG-0750. The headnotes should reach PSB before the 5th day of the month following the issuance of the director's decision. (5)

Finally, the petition manager will remove the petitioner's name from distribution and/or the service list(s) 90 days after issuance of the director's decision. (6)

Commission Actions (I)

SECY will inform the Commission of the availability of the director's decision. The Commission, at its discretion, may determine to review the director's decision within 25 days of the date of the decision and may direct the staff to take some other action than that in the director's decision. If the Commission does not act on the director's decision within 25 days (unless the Commission extends the review time), the director's decision becomes the final agency action and SECY sends a letter to the petitioner informing the petitioner that the Commission has taken no further action on the petition.

Exhibit 1

Simplified 2.206 Process Flow Chart

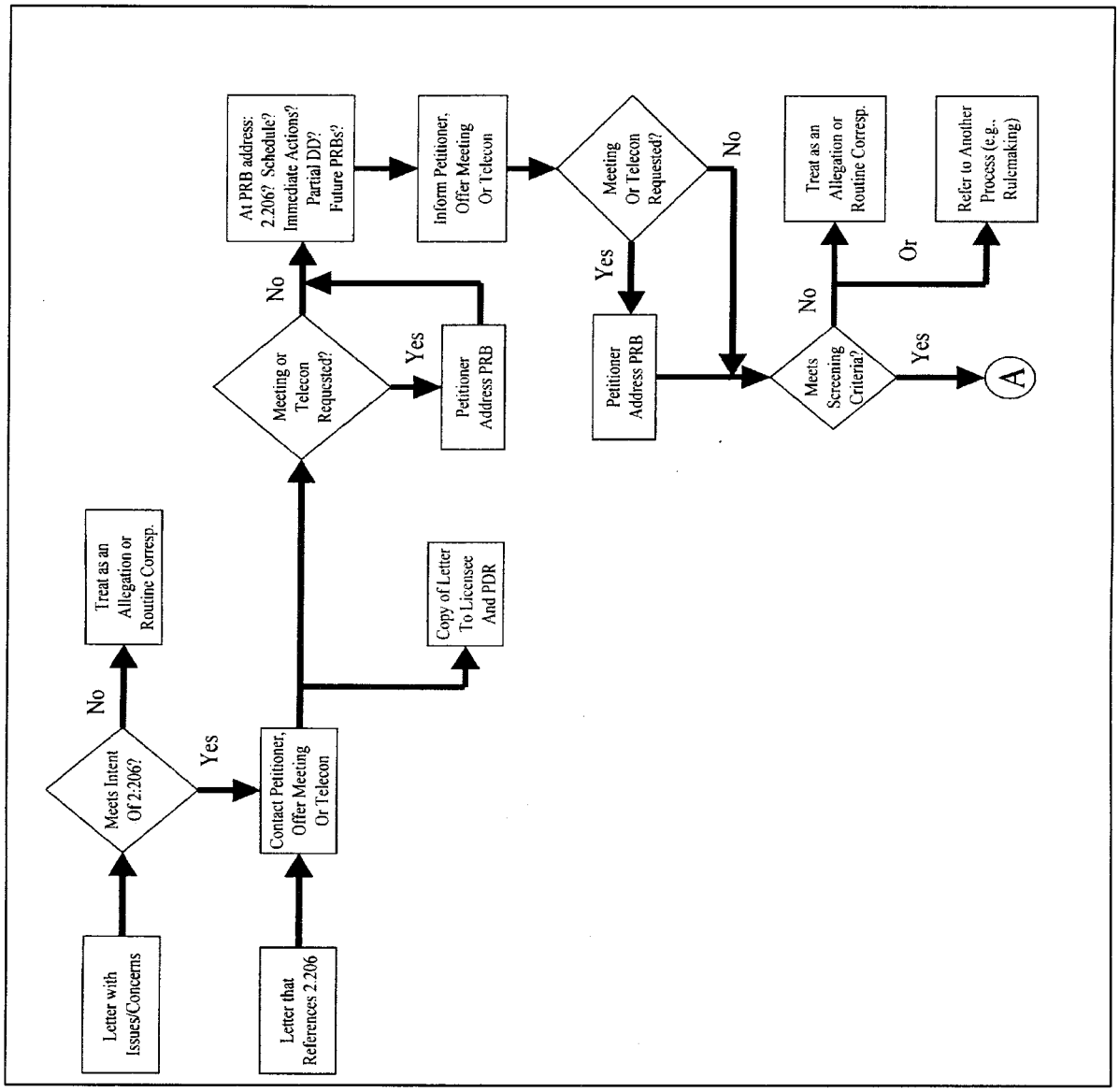

Exhibit 1

Simplified 2.206 Process Flow Chart (continued)

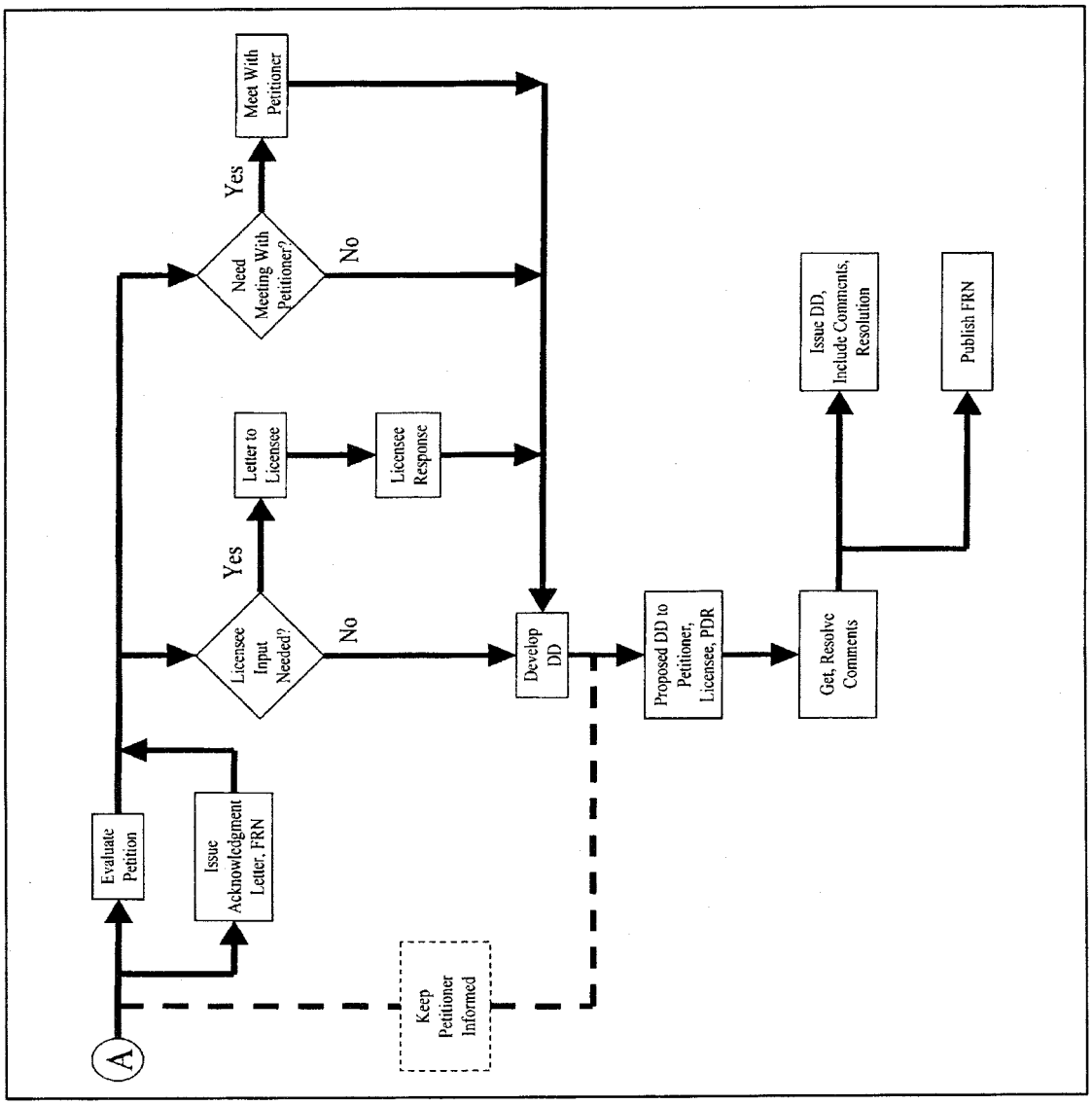

Exhibit 2
Petition Manager Checklist

☐ Review the petition for allegations and sensitive material. Also determine whether or not any immediate actions requested require expedited staff response.

☐ Contact the petitioner and discuss the public nature of the process. Offer a pre-PRB meeting or telecon to the petitioner.

☐ Send a copy of the incoming petition to the licensee and Document Control Desk (Public), with redactions as appropriate.

☐ If a pre-PRB meeting or telecon is held, notice it (meeting only) and arrange for it to be recorded and transcribed.

☐ Prepare a PRB presentation. Include the following information:

- Does the request meet the criteria for review under 2.206?
- What are the issues and their significance?
- Is there a need for immediate action (whether requested or not)?
- Is there a need for OE, OI, OIG, or OGC involvement?
- What is your recommended approach to the response?
- What schedule is proposed?

☐ Prepare a PRB presentation. Include the following information:

☐ Arrange for the PRB meeting. Address the PRB.

☐ Ensure assigned office management agrees with the PRB recommendations.

☐ Inform the petitioner of the PRB recommendations. Offer a post-PRB meeting.

☐ If a post-PRB meeting or telecon is held, notice it (meeting only) and arrange for it to be recorded and transcribed.

☐ Arrange a follow-up PRB meeting to resolve petitioner comments

☐ Ensure assigned office management agrees with the PRB final recommendations.

☐ If the assigned office's management agrees with the PRB that the request is not a 2.206 petition, send a letter to the petitioner, treat any open issues under the appropriate process (e.g., rulemaking). Stop here.

☐ If the assigned office's management agrees with the PRB that the request is a 2.206 petition, continue with this checklist.

Exhibit 2 (continued)

☐ Add petitioner to appropriate service list(s).

☐ Issue acknowledgment letter and associated *Federal Register* notice.

☐ If licensee input is needed, send a written request.

☐ If further petitioner input is needed, arrange for a technical review meeting.

☐ Make periodic status updates to the petitioner.

☐ Prepare the director's decision, addressing:

- Each of the petitioners' issues
- The safety significance of each issue
- The staff's evaluation of each issue and actions taken

☐ Ensure all referenced documents are available to the public

☐ Send the proposed director's decision to the petitioner and licensee for comment, with a copy to the PDR.

☐ Include comments received and their resolution in the final director's decision.

☐ Prepare the *Federal Register* notice for the director's decision.

☐ As soon as the director's decision is signed:

- Inform the petitioner of the substance of the decision and that issuance is imminent.
- Hand-carry two full copies of the package (including the incoming(s) and distribution and service lists) and five additional copies to the Rulemakings and Adjudication Staff in SECY
- Hand-carry the original signed *Federal Register* notice (ONLY) and five copies to the Rules and Directives branch. Do NOT include the director's decision in this package.
- Immediately dispatch the signed original letter and decision and a copy of the *Federal Register* notice to the petitioner.

☐ Within 2 working days of issuing the Director's decision:

- Provide a copy of the director's decision to the OGC special counsel assigned to 2.206 matters.
- Email and send two paper copies of the director's decision to the NRC Issuances Project Officer in OCIO.
- Email a signed, dated, and numbered copy of the director's decision to NRCWEB.
- Email headnotes on the petition to the NRC Issuances Project Officer in OCIO.

Exhibit 3

Sample Closure Letter for Requests That are not 2.206 Petitions

[Petitioner's Name]
[Petitioner's Address]

Dear Mr. :

Your petition dated [**insert date**] and addressed to the [**insert addressee**] has been referred to the Office of [insert] pursuant to 10 CFR 2.206 of the Commission's regulations. You request [**state petitioner's requests**]. As the basis for your request, you state that [**insert basis for request**].

You met with our petition review board (PRB) on [**insert date**] to discuss your petition. The results of that discussion have been considered in the PRB's determination regarding your request for immediate action and whether or not the petition meets the criteria for consideration under 10 CFR 2.206. **OR** Our petition review board has reviewed your submittal. The staff has concluded that your submittal does not meet the criteria for consideration under 10 CFR 2.206 because [**explain our basis, addressing all aspects of the submittal and making reference to the appropriate criteria in this MD**].

[**Provide the staff's response, if available, to the issues raised.**] AND/OR [**Explain what further actions, if any, the staff intends to take in response to the request (e.g., treat it as an allegation or routine correspondence**).]

Thank you for bringing these issues to the attention of the NRC.

Sincerely,

[Insert Division Director's Name]

[Office of [insert Office Name]

Docket Nos. [ ]

cc: [**Licensee (w/copy of incoming 2.206 request) & Service List**]

Exhibit 4

Sample Acknowledgment Letter

[Petitioner's Name]
[Petitioner's Address]

Dear Mr. :

Your petition dated [**insert date**] and addressed to the [**insert addressee**] has been referred to me pursuant to 10 CFR 2.206 of the Commission's regulations. You request [**state petitioner's requests**]. As the basis for your request, you state that [**insert basis for request**]. I would like to express my sincere appreciation for your effort in bringing these matters to the attention of the NRC.

You met with our Petition Review Board (PRB) on [**insert date**] to discuss your petition. The results of that discussion have been considered in the PRB's determination regarding [**your request for immediate action and in establishing**] the schedule for the review of your petition. Your request to [**insert request for immediate action**] at [**insert facility name**] is [**granted or denied**] because [**staff to provide explanation**].

As provided by Section 2.206, we will take action on your request within a reasonable time. I have assigned **[first and last name of petition manager]** to be the petition manager for your petition. Mr. **[last name of petition manager]** can be reached at **[301-415-extension of petition manager]** Your petition is being reviewed by **[organizational units]** within the Office of [**name of appropriate Office**]. **If necessary, add**: I have referred to the NRC Office of the Inspector General (OIG) those allegations of NRC wrongdoing contained in your petition. I have enclosed for your information a copy of the notice that is being filed with the Office of the *Federal Register* for publication. I have also enclosed for your information a copy of Management Directive 8.11 "Review Process for 10 CFR 2.206 Petitions," and the associated brochure NUREG/BR-0200, "Public Petition Process," prepared by the NRC Office of Public Affairs.

Sincerely,

[**Office Director**]

Enclosures: *Federal Register* Notice
Management Directive 8.11
NUREG/BR-0200

cc: [**Licensee (w/copy of incoming 2.206 request) & Service List**]

Exhibit 5

[7590–01–P]

Sample *Federal Register* Notice

U.S. NUCLEAR REGULATORY COMMISSION

Docket No(s).

License No(s).

[Name of Licensee]

RECEIPT OF REQUEST FOR ACTION UNDER 10 CFR 2.206

Notice is hereby given that by petition dated [insert date], [insert petitioner's name] (petitioner) has requested that the NRC take action with regard to [insert facility or licensee name]. The petitioner requests [state petitioner's requests].

As the basis for this request, the petitioner states that [**state petitioner's basis for request**].

The request is being treated pursuant to 10 CFR 2.206 of the Commission's regulations. The request has been referred to the Director of the Office of [**insert action office**]. As provided by Section 2.206, appropriate action will be taken on this petition within a reasonable time. The petitioner met with the [**insert action office**] petition review board on [**insert date**] to discuss the petition. The results of that discussion were considered in the board's determination regarding [**the petitioner's request for immediate action and in establishing**] the schedule for the review of the petition. [**If necessary, add**] By letter dated _____ , the Director (**granted or denied**) petitioner's request for [**insert request for immediate action**] at [**insert facility/licensee name**]. A copy of the petition is available for inspection at the Commission's Public Document Room at 2120 L Street, NW. (Lower Level), Washington, DC 20555-0001, and electronically from the ADAMS Public Library component on the NRC Web site, *http://www.nrc.gov* (the Electronic Reading Room).

FOR THE NUCLEAR REGULATORY COMMISSION

[**Office Director**]

Dated at Rockville, Maryland

This _____ day of _____, 200X.

Exhibit 6

Sample Director's Decision and Cover Letter

[Insert petitioner's name & address]

Dear **[insert petitioner's name]**:

This letter responds to the petition you filed with [**EDO or other addressee of petition**] pursuant to Section 2.206 of Title 10 of the *Code of Federal Regulations* (10 CFR 2.206) on [**date of petition**] as supplemented on [**dates of any supplements**]. In your petition you requested that the NRC [**list requested actions**].

On [**date of acknowledgment letter**] the NRC staff acknowledged receiving your petition and stated pursuant to 10 CFR 2.206 that your petition was being referred to me for action and that it would be acted upon within a reasonable time. You were also told that [**staff response to any request for immediate action**].

You met with the petition review board on [**date(s) of the pre- and/or post-PRB meeting(s)**] to clarify the bases for your petition. The transcript(s) of this/these meeting(s) was/were treated as (a) supplement(s) to the petition and are available for public inspection at the Commission's Public Document Room, the Gelman Building, 2120 L Street, NW., Washington, DC, and electronically from the ADAMS Public Library component on the NRC Web site, *http://www.nrc.gov* (the Electronic Reading Room).

By letter dated [**insert date**], the NRC staff requested [**name of licensee**] to provide information related to the petition. [**Name of licensee**] responded on [**insert date**] and the information provided was considered by the staff in its evaluation of the petition..

In your petition you stated that [**summarize the issues raised**]. [**Briefly summarize the safety significance of the issues and the staff's response.**]

The NRC issued a Partial Director's Decision (DD-YY-XX) dated [**insert**] which [**explain what aspects of the petition were addressed**]. [**Explain which issues remained to be addressed in this director's decision and briefly explain the reason for the delay on these issues.**]

The staff sent a copy of the proposed director's decision to you and to [**licensee(s)**] for comment on [**date**]. You responded with comments on [**date**] and the licensee responded on [**date**]. The comments and the staff's response to them are included in the director's decision. OR The staff did not receive any comments on the proposed director's decision.

Exhibit 6 (continued)

[**Summarize the issues addressed in this director's decision and the staff's response.**]

A copy of the Director's Decision (DD-YY-XX) will be filed with the Secretary of the Commission for the Commission to review in accordance with 10 CFR 2.206(c). As provided for by this regulation, the decision will constitute the final action of the Commission 25 days after the date of the decision unless the Commission, on its own motion, institutes a review of the decision within that time. [**The documents cited in the enclosed decision are available for public inspection at the Commission's Public Document Room, the Gelman Building, 2120 L Street, NW., Washington, DC, and electronically from the ADAMS Public Library component on the NRC Web site, *http://www.nrc.gov* (the Electronic Reading Room) (cite any exceptions involving proprietary or other protected information)**].

I have also enclosed a copy of the notice of "Issuance of Final Director's Decision Under 10 CFR 2.206" that has been filed with the Office of the *Federal Register* for publication.

[**If appropriate, acknowledge the efforts of the petitioner in bringing the issues to the attention of the NRC.**] Please feel free to contact [**petition manager name and number**] to discuss any questions related to this petition.

Sincerely,

[Insert Office Director's Name]

Docket Nos. [ ]

Enclosures: Director's Decision YY-XX
Federal Register Notice

DD-YY-XX

UNITED STATES OF AMERICA
NUCLEAR REGULATORY COMMISSION
OFFICE OF [INSERT]
[**Office Director Name**], Director

In the Matter of	)	Docket No(s).
	)	
	)	
[**LICENSEE NAME**]	)	License No(s).
	)	
	)	
([**Plant or facility name(s)**])	)	(10 CFR 2.206)

I. Introduction

By letter dated [**insert date**], as supplemented on [**dates of supplements**], [**petitioner names and, if applicable, represented organizations**] filed a Petition pursuant to Title 10 of the *Code of Federal Regulations*, Section 2.206. The petitioner(s) requested that the U.S. Nuclear Regulatory Commission (NRC) take the following actions: [**list requests**]. The bases for the requests were [**describe**].

In a letter dated [**insert**], the NRC informed the Petitioners that their request for [**list immediate actions requested**] was approved/denied and that the issues in the Petition were being referred to the Office of [**insert**] for appropriate action.

The Petitioner(s) met with the (**assigned office abbreviation**) petition review board on [**date(s) of the pre- and/or post-PRB meeting(s)**] to clarify the bases for the Petition. The transcript(s) of this/these meeting(s) was/were treated as (a) supplement(s) to the petition and are available for public inspection at the Commission's Public Document Room, the Gelman Building, 2120 L Street, NW., Washington, DC, and electronically from the ADAMS Public Library component on the NRC Web site, *http://www.nrc.gov* (the Electronic Reading Room).

By letter dated [**insert date**], the NRC staff requested [**name of licensee**] to provide information related to the petition. [**Name of licensee**] responded on [**insert date**] and the information provided was considered by the staff in its evaluation of the petition.

The NRC issued a Partial Director's Decision (DD-YY-XX) dated [**insert**] which [**explain what aspects of the petition were addressed**]. [**Explain which issues remained to be**

addressed in this director's decision and briefly explain the reason for the delay on these issues.]

The NRC sent a copy of the proposed director's decision to the Petitioner and to [**licensee(s)**] for comment on [**date**]. The Petitioner responded with comments on [**date**] and the licensee(s) responded on [**date**]. The comments and the NRC staff's response to them are included in the director's decision. OR The staff did not receive any comments on the proposed director's decision.

II. Discussion

[**Discuss the issues raised, the significance of the issues (or lack thereof), and the staff's response with supporting bases. Acknowledge any validated issues, even if the staff or the licensee decided to take corrective actions other than those requested by the petitioner. Clearly explain all actions taken by the staff or the licensee to address the issues, even if these actions were under way or completed before the petition was received. This discussion must clearly present the staff response to all of the valid issues so that it is clear that they have been addressed.**]

III. Conclusion

[**Summarize the staff's conclusions with respect to the issues raised and how they have been, or will be, addressed.**]

As provided in 10 CFR 2.206(c), a copy of this Final Director's Decision will be filed with the Secretary of the Commission for the Commission to review. As provided for by this regulation, the decision will constitute the final action of the Commission 25 days after the date of the decision unless the Commission, on its own motion, institutes a review of the decision within that time.

Dated at Rockville, Maryland, this [**insert date**] day of [**insert month, year**].

[**Office director's name**], Director
Office of [**insert**]

Exhibit 7

[7590–01–P]

Sample *Federal Register* Notice for Director's Decision

U.S. NUCLEAR REGULATORY COMMISSION

Docket No(s).

License No(s).

[Name of Licensee]

NOTICE OF ISSUANCE OF DIRECTOR'S DECISION UNDER 10 CFR 2.206

Notice is hereby given that the Director, **[name of office]**, has issued a director's decision with regard to a petition dated **[insert date]**, filed by **[insert petitioner's name]**, hereinafter referred to as the "petitioner." **[The petition was supplemented on [insert date, include transcripts from meeting(s) with the PRB]**. The petition concerns the operation of the **[insert facility or licensee name]**.

The petition requested that **[insert facility or licensee name]** should be **[insert request for enforcement-related action]**. **[If necessary, add]** The petitioner also requested that a public meeting be held to discuss this matter in the Washington, DC, area.

As the basis for the **[insert date]** request, the petitioner raised concerns stemming from **[insert petitioner's supporting basis for the request]**. The **[insert petitioner's name]** considers such operation to be potentially unsafe and to be in violation of Federal regulations. In the petition, a number of references to **[insert references]** were cited that the petitioner believes prohibit operation of the facility with **[insert the cause for the requested enforcement-related action]**.

The petition of **[insert date]** raises concerns originating from **[insert summary information on more bases/rationale/discussion and supporting facts used in the disposition of the petition and the development of the director's decision]**.

Exhibit 7 (continued)

On [**insert date**], the petitioner [**and the licensee**] met with the staff's petition review board. On **[insert date of public meeting]**, the NRC conducted a meeting regarding **[insert facility or licensee name]**. The(se) meeting(s) gave the petitioner and the licensee an opportunity to provide additional information and to clarify issues raised in the petition.

The NRC sent a copy of the proposed Director's Decision to the Petitioner and to [**licensee(s)**] for comment on [**date**]. The Petitioner responded with comments on [**date**] and the licensee(s) responded on [**date**]. The comments and the NRC staff's response to them are included in the Director's Decision. OR The staff did not receive any comments on the proposed Director's Decision.

The Director of the Office of **[name of office]** has determined that the request(s), to require **[insert facility or licensee name]** to be **[insert request for enforcement-related action]**, be **[granted/denied]**. The reasons for this decision are explained in the director's decision pursuant to 10 CFR 2.206 **[Insert DD No.]**, the complete text of which is available for public inspection at the Commission's Public Document Room, the Gelman Building, 2120 L Street, NW. (Lower Level), Washington, DC 20555-0001, and via the NRC Home Page (*http://www.nrc.gov*) on the World Wide Web, under the "Public Participation & School Programs" icon.

A copy of the director's decision will be filed with the Secretary of the Commission for the Commission's review in accordance with 10 CFR 2.206 of the Commission's regulations. As provided for by this regulation, the director's decision will constitute the final action of the Commission 25 days after the date of the decision, unless the Commission, on its own motion, institutes a review of the director's decision in that time.

Dated at Rockville, Maryland, this **[insert date]** day of **[insert month, year]**.

FOR THE NUCLEAR REGULATORY COMMISSION

Original Signed By

[Insert Office Director's Name]
Office of **[insert Office Name]**

Exhibit 8

Sample Letters Requesting Comments on the Proposed Director's Decision

(**Note**: For clarity, separate letters will need to be sent to the petitioner and the licensee. This sample provides guidance for both letters.)

[**Insert petitioner's address**]

Dear [**Insert petitioner's name**]

Your petition dated [**insert date**] and addressed to the [**insert addressee**] has been reviewed by the NRC staff pursuant to 10 CFR 2.206 of the Commission's regulations. The staff's proposed director's decision on the petition is enclosed. I request that you provide comments to me on any portions of the decision that you believe involve errors. The staff is making a similar request of the licensee. The staff will then review any comments provided by you and the licensee and consider them before finalizing the director's decision.

Please provide your comments by [**insert date, nominally 2 weeks from the date of this letter**].

Sincerely,

[**Signed by Division Director**]

Docket Nos. []

cc w/o encl: [**Service List**]

[**Insert licensee's address**]

Dear [**Insert licensee's name**]

By letter dated [**insert date**], [**insert name of petitioner**] submitted a petition pursuant to 10 CFR 2.206 of the Commission's regulations with respect to [**insert name(s) of affected facilities**]. The petition has been reviewed by the NRC staff and the staff's proposed director's decision on the petition is enclosed. I request that you provide comments to me on any portions of the decision that you believe involve errors. The staff is making a similar request of the petitioner. The staff will then review any comments provided by you and the petitioner and consider them before finalizing the director's decision.

Exhibit 8 (continued)

Please provide your comments by [**insert date, nominally 2 weeks from the date of this letter**].

Sincerely,

[**Signed by Division Director**]

Docket Nos. [ ]

cc w/encl: [**Service List**]

[FR Doc. 00–18921 Filed 7–26–00; 8:45 am]
BILLING CODE 7590–01–C